PTO/SB/16 (10-01)
Approved for use through10/31/2002. OMB 0651-0032
U.S. Patent and Trademark Office; U.S. DEPARTMENT OF COMMERCE
Under the Paperwork Reduction Act of 1995, no persons are required to respond to a collection of information unless it displays a valid OMB control number.

062604 17175 U.S. PTO

# PROVISIONAL APPLICATION FOR PATENT COVER SHEET

**This is a request for filing a PROVISIONAL APPLICATION FOR PATENT under 37 CFR 1.53(c).**

**Express Mail Label No.** EV 333988130 US

22264 U.S. PTO 60/583169 062604

**INVENTOR(S)**

| Given Name (first and middle [if any]) | Family Name or Surname | Residence (City and either State or Foreign Country) |
|---|---|---|
| Thomas A. | Howell | Palo Alto, CA USA |
| David | Chao | Saratoga, CA USA |
| C. Douglass | Thomas | Campbell, CA USA |

☑ *Additional inventors are being named on the* 1 *separately numbered sheets attached hereto*

**TITLE OF THE INVENTION (500 characters max)**

ELECTRICAL COMPONENTS FOR USE WITH EYEWEAR, AND METHODS THEREFOR

*Direct all correspondence to:* **CORRESPONDENCE ADDRESS**

☑ Customer Number 34071 → *Place Customer Number Bar Code Label here*

*Type Customer Number here*

*OR*

| | | | | | |
|---|---|---|---|---|---|
| ☐ Firm *or* Individual Name | | | | | |
| Address | | | | | |
| Address | | | | | |
| City | | State | | ZIP | |
| Country | | Telephone | | Fax | |

**ENCLOSED APPLICATION PARTS** ***(check all that apply)***

☑ Specification *Number of Pages* 194 & DRAWINGS

☐ Drawing(s) *Number of Sheets*

☐ Application Data Sheet. See 37 CFR 1.76

☐ CD(s), Number

☐ Other (specify)

METHOD OF PAYMENT OF FILING FEES FOR THIS PROVISIONAL APPLICATION FOR PATENT

☑ Applicant claims small entity status. See 37 CFR 1.27.

☐ A check or money order is enclosed to cover the filing fees

☐ The Commissioner is hereby authorized to charge filing fees or credit any overpayment to Deposit Account Number:

☑ Payment by credit card. Form PTO-2038 is attached.

FILING FEE AMOUNT ($): $80.00

The invention was made by an agency of the United States Government or under a contract with an agency of the United States Government.

☑ No.

☐ Yes, the name of the U.S. Government agency and the Government contract number are: _____

*Respectfully submitted,*

SIGNATURE C. Douglass Thomas

Date 06/26/2004

TYPED or PRINTED NAME C. Douglass Thomas

REGISTRATION NO. *(if appropriate)* 32,947

TELEPHONE 650.903.9200

Docket Number: IPVCP001P2

## USE ONLY FOR FILING A PROVISIONAL APPLICATION FOR PATENT

This collection of information is required by 37 CFR 1.51. The information is used by the public to file (and by the PTO to process) a provisional application. Confidentiality is governed by 35 U.S.C. 122 and 37 CFR 1.14. This collection is estimated to take 8 hours to complete, including gathering, preparing, and submitting the complete provisional application to the PTO. Time will vary depending upon the individual case. Any comments on the amount of time you require to complete this form and/or suggestions for reducing this burden, should be sent to the Chief Information Officer, U.S. Patent and Trademark Office, U.S. Department of Commerce, Washington, D.C. 20231. DO NOT SEND FEES OR COMPLETED FORMS TO THIS ADDRESS. SEND TO: Box Provisional Application, Assistant Commissioner for Patents, Washington, D.C. 20231.

Luxottica Ex. 1019
IPR Petition USP 8,801,174

# *PROVISIONAL APPLICATION COVER SHEET*
## *Additional Page*

PTO/SB/16 (02-01)
Approved for use through 10/31/2002. OMB 0651-0032
U.S. Patent and Trademark Office; U.S. DEPARTMENT OF COMMERCE
Under the Paperwork Reduction Act of 1995, no persons are required to respond to a collection of information unless it displays a valid OMB control number.

| Docket Number | IPVCP001P2 |
|---|---|

| INVENTOR(S)/APPLICANT(S) | | |
|---|---|---|
| Given Name (first and middle [if any]) | Family or Surname | Residence (City and either State or Foreign Country) |
| Peter P. | Tong | Mountain View, CA USA |

Number 1 of 1

**WARNING: Information on this form may become public. Credit card information should not be included on this form. Provide credit card information and authorization on PTO-2038.**

# ELECTRICAL COMPONENTS FOR USE WITH EYEWEAR, AND METHODS THEREFOR

The following disclosure describes various inventions as well aspects and implementations thereof. The disclosure is organized into two sections. The sections are as follows:

A. EYEGLASSES WITH ELECTRICAL COMPONENTS

B. EYEWEAR WITH ULTRAVIOLET DETECTION SYSTEM

C. EYEGLASSES WITH USER INPUT CAPABILITY

The inventions, aspects, or implementations discussed in these sections can be used separately or in any combination.

The application is related to U.S. Provisional Patent Application No. xxxxxxxx (Att. Dkt. IPVCP001P), by Howell et al., filed April 15, 2004, entitled "EYEWEAR WITH ULTRAVIOLET DETECTION SYSTEM," and which is hereby incorporated herein by reference.

In addition, this application is related to: (i) U.S. Patent Application xxxxxxxx (Att. Dkt. IPVMAP01), by Thomas et al., filed April 15, 2004, and entitled "EYEGLASSES FOR WIRELESS COMMUNICATIONS," which is hereby incorporated herein by reference; (ii) U.S. Provisional Patent Application No. 60/462,591, filed April 15, 2003, and entitled "EYEGLASSES FOR WIRELESS COMMUNICATION," which is hereby incorporated herein by reference; (iii) U.S. Provisional Patent Application No. 60/509,631, filed October 9, 2003, and entitled "TETHERED ELECTRICAL COMPONENTS FOR EYEGLASSES," which is hereby incorporated herein by reference; and (iv) U.S. Provisional Patent Application No. 60/527,565, filed December 8, 2003, and entitled "ADAPTABLE COMMUNICATION TECHNIQUES FOR ELECTRONIC DEVICES," which is hereby incorporated herein by reference.

## A. EYEGLASSES WITH ELECTRICAL COMPONENTS

SUMMARY OF THE INVENTION

[0001] The present invention provides a pair of glasses with one or more embedded or partially embedded electrical components. In a number of the embodiments of the invention, with one or more electrical components in the glasses, the electrical components are much easier to operate. For example, you do not have to take an electronic device out from your pocket to use it. The electronic device may already be in your glasses. All you need to do is to turn it on.

[0002] Embedding electrical components into glasses has become easier due to a number of industrial trends. First is the miniaturization of electrical components. Another reason is that many different styles of glasses in the industry have more surface areas. They can have wider temples at the hinges of the frames. The wider temples might be for the placement of logos. They can have shields at the edges of the lens holders of the frames. This can be for stylistic reasons. Or, they can be for health reasons. For example, some people may want to minimize the amount of sunlight or ultraviolet light going into their eyes. One way is to have sunglasses with frames or shields on frames that better fit their facial profile. Such frames provide more areas to hold electrical components. Further, the chance for the electrical components to adversely affect the style of the frames is reduced.

[0003] The invention can be implemented in numerous ways, including as a system, device, apparatus, and method. Several embodiments of the invention are discussed below.

[0004] In one embodiment, the electrical components in a pair of glasses include a speaker and a connector, both at least partially embedded in the glasses. The connector can be a standard or a non-standard connector. The connector can be a male or a female connector. The connector can be at different location on the glasses. For example, the connector can be at the end of a temple of the glasses. The speaker is electrically coupled to the connector. The connection can be with a printed-circuit board

in the glasses. The printed-circuit board can be a flexible or rigid printed-circuit board. With the connector, the glasses can access audio signals from an external device, such as a multimedia asset player.

[0005] In another embodiment, a pair of glasses includes a storage medium. The memory device can be coupled to another electronic instrument external to the glasses through one or more connectors at the glasses. Such a pair of glasses allows file storage in the glasses.

[0006] In yet another embodiment, a pair of glasses includes a speaker, a coder/decoder, a processor and a storage medium. The pair of glasses can serve as a multimedia asset player, such as a MP3 player. There can also be a connector at the glasses to facilitate the transfer of multimedia assets.

[0007] In a further embodiment, one or more electrical components are in a base tethered to a pair of glasses. For example, a battery to provide power for the electrical components in the glasses can be in the base. The base itself can have a connector to allow it to be tethered to another electronic device. In a number of embodiments, the base is considered to be a part of the glasses.

[0008] Instead of just receiving signals, in one embodiment, a pair of glasses also has a microphone and a wireless transceiver. The pair of glasses allows a user to engage in wireless communication.

[0009] In another embodiment, a pair of glasses with wireless coupling capabilities includes a preference indicator. The indicator allows a user to indicate the user's preference regarding, for example, what is being output by the glasses. There can be a radio embedded in the glasses. If the user provides her preference on, for example, the song being played, her preferences can be remotely tracked by a third party. There can be a multimedia asset player in the glasses, with the multimedia assets wirelessly received by the glasses. If the user provides her preference on the assets being played, these assets can be stored in a storage medium in the glasses for later consumption.

[00010] In yet another embodiment, there can be one or more knobs on the glasses, for controlling operations of electrical components in the glasses. The location and the number of knobs vary depending on the applications.

[00011] In a further embodiment, the glasses include a camera. The camera captures what the user sees. In other words, what the user sees can be what the user gets. Images captured can be stored at a remote site. This can be achieved, for example, by downloading the images to a storage device using a connector at the glasses. Or, if the glasses have wirelessly connection capabilities, the images can be wirelessly transmitted to the remote site. The glasses with a camera allow the user wearing the glasses to be remotely control.

[00012] In still another embodiment, a pair of glasses includes one or more sensors. There can be different types of sensors. For example, one sensor can be used to determine if the pair of glasses is being worn. Another sensor can be used to detect an environmental condition, such as the amount of ultraviolet radiation in the vicinity of the glasses. Yet another sensor can be used to detect a condition of the user.

[00013] Other aspects and advantages of the present invention will become apparent from the following detailed description, which, when taken in conjunction with the accompanying drawings, illustrates by way of example the principles of the invention.

## BRIEF DESCRIPTION OF THE DRAWINGS

[00014] FIG. 1 shows one embodiment of the invention with a speaker in one of the temples of the glasses.

[00015] FIG. 2 shows a tube extending from a speaker at a temple of the glasses to guide sound to one of the ears of the user according to one embodiment of the invention.

[00016] FIG. 3 shows a retractable tube extending from a speaker at a temple of the glasses according to one embodiment of the invention.

[00017] FIG. 4 shows a funnel at the output of a speaker in the glasses according to one embodiment of the invention.

[00018] FIG. 5 shows a male connector at the end of a temple according to one embodiment of the invention.

[00019] FIGS. 6A-6B illustrate a process to make a non-standard female plug couple to a male connector at a pair of glasses according to one embodiment of the invention.

[00020] FIG. 7 illustrates another non-standard connector, applicable to clamp onto a temple of a pair of glasses according to an embodiment of the invention.

[00021] FIGS. 8A-8E shows different embodiments of standard connectors located at different positions on the temple of a pair of glasses according to the invention.

[00022] FIG. 9 shows some of the electrical components for a MP3 player according to an embodiment of the invention.

[00023] FIG. 10 shows an embodiment of the invention where a user is wearing a pair of glasses with electrical components, tethered to a base, which is connected to a portable device.

[00024] FIGS. 11A-11B show different embodiments of the present invention illustrating some of the electrical components for wireless connections to a pair of glasses.

[00025] FIG. 12 shows a process for a personalized radio according to one embodiment of the present invention.

[00026] FIG. 13 shows a number of attributes of control knobs according to different embodiments of the present invention.

[00027] FIG. 14 shows some of the electrical components for capturing images with a pair of glasses according to an embodiment of the present invention.

[00028] FIG. 15 shows an operation of taking actions based on images captured with a pair of glasses with wireless transceiver capability according to one embodiment of the invention.

[00029] FIG. 16 shows an operation to provide messages to a user based on images captured by a pair of glasses according to an embodiment of the present invention.

[00030] FIG. 17A is a chart that depicts examples of sensors in a pair of glasses according to different embodiments of the present invention.

[00031] FIG. 17B is a diagram of a temple arrangement according to one embodiment of the invention.

[00032] FIG. 17C is a diagram of a cover that fits over and at least partially covers a conventional temple tip according to one embodiment of the invention.

[00033] FIG. 17D is a diagram of a fit-over temple that fits over and at least partially covers a conventional temple tip according to one embodiment of the invention.

[00034] FIG. 18 shows an embodiment including an eye mask according to the invention.

[00035] FIG. 19 shows an embodiment including a night cap according to the invention.

[00036] Same numerals in Figures 1-19 are assigned to similar elements in all the figures. Embodiments of the invention are discussed below with reference to Figures 1-19. However, those skilled in the art will readily appreciate that the detailed description given herein with respect to these figures is for explanatory purposes as the invention extends beyond these limited embodiments.

## DETAILED DESCRIPTION OF THE INVENTION

[00037] A number of embodiments according to the present invention regarding glasses with one or more electrical component partially or fully embedded, will be described. Many of them are applicable to different types of glasses, such as sunglasses, auxiliary frames, fit-over glasses, prescription glasses, safety glasses, swim masks, and goggles, such as ski goggles. In a number of embodiments, the frames of the glasses have more surface area than frames with minimal structure. For example, the temple regions of the glasses can have a taper profile. They are wider or broader when they are closer to the lens holders. Then they get narrower. In one embodiment, a wider or broader temple implies that the temple spans across a wider or broader area longitudinally down from the top of the head of the user. FIG. 1 shows an example of such an embodiment.

[00038] FIG. 1 shows one embodiment 100 of the invention where there is a speaker 102 at least partially embedded in one of the temples 104 of the glasses 106.

The speaker 102 is closer to one end of the temple 104 than the other end. The end of the temple that the speaker 102 is closer to is the end that is in the vicinity of the lens holder or the hinge of the glasses 106, instead of the end 108 that is free. The speaker can be partially embedded in the glasses. For example, the mouth of the speaker, where sometimes there can be small holes on a cover, can be exposed.

[00039] In the embodiment shown in FIG. 1, the speaker 102 outputs audio signals in the direction towards the user. In another embodiment, the speaker 102 outputs audio signals in the direction away from the user. For example, the mouth of the speaker 102 can be facing outwards away from the user.

[00040] There are different approaches to embed an electrical component into a pair of glasses. For example, the glasses can be made of plastic (e.g., plastic frames). One way to produce such frames is to first assemble electrical components onto a circuit board. The circuit board can be shaped to fit, for example, the temple of the glasses. The circuit board is placed into a mold. Then, hot, molten plastic is injected around the circuit board to form the temple piece of the glasses. To reduce weight, the wall of the glasses can be made relatively thin through injection molding techniques.

[00041] In another embodiment, the glasses have metallic frames. For example, the frames can be made of Titanium, which is a relatively light metal. Also, Titanium is relatively non-conductive and strong, and is quite immune to corrosion. Further, Titanium can be anodized or heat colored.

[00042] For glasses with metallic frames, to prevent circuits from being shorted or to reduce leakage current, one embodiment provides an insulating layer between the electrical components or circuit board and the metallic frames. One example of an insulting layer is a tape to encapsulate the electrical components. The tape is non-conducting so as to provide insulation and, to a certain degree, can also provide mechanical stiffness. One way to make such temples is to have two sheets of the metal die-stamped to form the two halves, or the two faces of the temple piece. A circuit board is made to fit into the space between the faces. Then, two die-cut pieces of tape can cover the top and the bottom surfaces of the circuit board. The board with the tapes is sandwiched between the faces to form the temple. The tapes can be

double-sided sticky tapes, with one side sticking to the circuit board, and the other side sticking to the temple. An adhesive can be used to glue the two faces of the temple piece together.

[00043] In yet another embodiment, the frames are made of hard rubber. The frames can be manufactured in an approach similar to injection molding techniques, with circuit boards inserted into the mold along with the rubber at the time of molding.

[00044] Different types of speakers can be used, such as, standard, fixed-magnet/moving coil speakers; speakers with fixed-coil and a steel diaphragm; piezo-electric speakers; and electrostatic speakers.

[00045] In one embodiment, the glasses further include a tube, such as a plastic tube, extending from a speaker. The tube serves to guide sound generated by the speaker to one of the ears of the user. FIG. 2 shows an embodiment where a tube 150 is located on the outside of a temple 152. In another embodiment, the tube can be on the inside of a temple.

[00046] In one embodiment, the tube 150 can be rotated, such as from behind the temple 152 (if the tube is on the inside of the temple) to being downward at an angle towards one of the ears of the user, such as the position shown in FIG. 2. To increase flexibility, the tube can be attached to a rotating disk 154, which allows rotation about the speaker.

[00047] In another embodiment, the tube is malleable. This allows the tube to be placed in different positions.

[00048] In one embodiment, the length of the tube is adjustable. FIG. 3 shows such an embodiment 200 of a pair of glasses with a retractable tube 202. In the figure, the tube is shown to be in its extended position.

[00049] To further enhance sound coupling, in one approach, there is a plug 156 at the end of the tube for inserting into an ear of the user. The plug can be an ear bud. The plug can provide a cushion, foam rubber or other materials. Such materials give comfort and/or enhance sound coupling to the ear canal.

[00050] In another approach, there is a funnel at the output of the speaker. FIG. 4 shows the cross section of such a funnel from a speaker at a temple region of the

glasses. As shown in FIG. 4, the speaker 254 sits on a speaker frame 252, and the speaker 254 is electrically connected to a circuit board 256. As sound is generated from the speaker 254, the sound propagates to a tube 258 through a structure 260 in the shape of a funnel. Such a structure helps guide the sound to the tube (i.e., improved sound coupling). Also, FIG. 4 shows the tube, which can be the tube 150 shown in FIG. 2, mounted onto the temple region of the glasses with a circular lip 262. Such a lip 262 allows the tube 258 to rotate relative to the glasses. In the embodiment shown in FIG. 4, the speaker 254 is fully embedded in the glasses.

[00051] As an alternative to or in conjunction with the tube, the glasses can include a channel to likewise guide sound generated by the speaker to one of the ears of the user. For example, the channel can be formed within a temple. The temple also has an opening to output the sound towards the user's ear.

[00052] FIG. 1 shows one speaker at one of the temples. There can be more than one speaker at each temple. In one embodiment, there can also be one speaker at each temple. The two speakers can generate stereo effects.

[00053] In another embodiment, the glasses can provide four or more speakers to give a high fidelity sound or a surround sound effect. For example, each temple can include one speaker in front of the user's ear, and one speaker behind the user's ear. The different speakers can generate different portions or sections of the sound. Further, if a base (discussed below) or portable electronic device is coupled to the glasses, the base or portable electronic device can contain another speaker, such as a base or woofer speaker. Such embodiments enable the glasses to provide a personal high-fidelity sound or a surround-sound environment.

[00054] Electrical signals can be coupled to an electrical component, such as a speaker, in a pair of glasses through a number of mechanisms. In one embodiment, there is an electrical connector at least partially embedded in the glasses. In other words, at least a portion of the connector is inside the glasses. The connector is electrically coupled to the speaker (or other electrical component) by, for example, a conductor. The conductor can be on a printed-circuit board. In one embodiment, the conductor is also embedded in the glasses.

[00055] Regarding connectors, FIG. 5 shows one embodiment where the connector is not a standard connector. In FIG. 5, the connector is a male plug or a male connector 300 at the end of a temple 302 of a pair of glasses. The connector 300 is connected to the speaker through, for example, one or more wires embedded in the temple. Electrical signals external to the glasses can then be coupled to the speaker (or other electrical component) through the plug.

[00056] As shown in FIG. 5, the free end of the temple 302 can have a relatively flat cross section. There can be one or more electrically-conductive contacts, such as 304 and 306, on one or both of the flat surfaces of the temple. In FIG. 5, four contacts are shown on one surface of the temple. The contacts, 304 and 306, can be metal pads or bumps.

[00057] In one embodiment, a non-standard connector can be made using printed-circuit board technologies. First, a printed-circuit board with printed conductors connected to metal contact bumps is produced. Then plastic is overmolded around the printed-circuit board, with the mold designed to shut off around the bumps or pads. The overmolded plastic can serve as the temple, and the pads would be left exposed. Thus, portions of the printed circuit board are covered by plastic, and areas with the bumps or pads are exposed for connection. These pads serve as the connectors for the glasses.

[00058] Regarding printed-circuit boards, there can be one or more circuit boards in the glasses. For example, there can be a circuit board in one of the temples of the glasses. Or, the circuits can be divided into two circuit boards, one in each temple of the glasses. The circuit boards can carry additional electrical components to be described below.

[00059] In one embodiment, the circuit boards are rigid. In another embodiment, the circuit boards are made of flexible materials, such as a polyimide sheet, like Kapton. In one embodiment, the circuit board is configured or adapts to the shape of the temple in which it resides.

[00060] As shown in FIG. 5, the end of the temple 302 serves as a male connector (plug) 300. The non-standard male connector 300 can be received by a non-

standard female connector (plug) 310. Typically, the female connector 310 makes electrical and physical connection through grabbing around the male plug. The female connector 310 can be connected to a cable 312.

[00061] FIGS. 6A-6B illustrate a process to make the non-standard female plug 310. First, an electrical wire 354 is attached to a small sheet or piece of metal 356. FIG. 6A shows a number of such wires, with a number of the metal sheets or pieces crimped to a hard PVC 358. The figure shows the back side of the crimped board with the wires and with a number of holes, such as 360. Then the frame is overmolded with a soft PVC. FIG. 6B shows a cross section of the overmoded frame 362 with the soft PVC. As shown in the figure, a number of the metal sheets, such as 364 and 366, are exposed. They are the metal contacts in the female connector 310. Instead of the above approach, alternatively, a wire can be attached to a sheet of metal by putting the wire between the metal and the plastic as the metal is crimped onto a plastic. When the temple (i.e., male connector 300) is inserted into the female plug, the soft PVC material stretches slightly, providing a spring-force to keep the contacts connected.

[00062] The hard PVC can have a hardness of over 80 durometer, while the soft PVC can have a hardness of less than 50 durometer. The hard PVC can be replaced by other materials, such as Polypropylene or cloth. The soft PVC can be replaced by Silicone, or a thermo-plastic elastomer, such as Kraton.

[00063] Referring to both FIG. 5 and FIG. 6B, when the male connector 300 is inserted into the slot 314 of the female connector 310, the metal pads, 304 and 306, will get in contact, or mate, with the metal sheets, 364 and 366.

[00064] In one embodiment, as long as the male connector 300 is pushed all the way into the female connector 310, the pads are aligned correctly to the sheets for electrical connections. In another embodiment, there is an alignment mechanism to guide the position of the temple relative to the female connector so as to ensure the conductive sheets to be in contact with the conductive pads. For example, there can be a registration location to indicate that the male connector is at the appropriate position relative to the female connector. There can be an alignment extension, which can be a partial sphere, close to the end of the temple 302, such as between the pads 304 and

306, at 316. And, there can be a corresponding alignment notch at the female connector 310. When the extension is received or caught by the notch, the male connector 300 is in the appropriate position relative to the female connector 310. In other words, the alignment is proper, and the pads and the sheets are in contact.

[00065] FIG. 5 shows the non-standard male connector 300 at one end of a temple of a pair of glasses. In yet another embodiment, a non-standard connector can be at another location. FIG. 7 shows another example of a non-standard connector 400. The connector 400 includes one or more conductive pads, 412 and 414, on the top side of a temple 402. The connector 400 is designed to receive another connector 406 that grabs onto the side of the temple 402. There can be an indentation 404 on the temple 402 to receive the other connector 406. The other connector 406 can include a top 420 and a bottom 416 clip. There are a number of conductive pads or sheets inside the other connector 406. The indentation 404 provides an alignment to indicate where the top clip 420 of the other connector 406 should grab onto the temple 402 for connection. At that position, the conductive pads at the temple will be in contact with the conductive pads or sheets at the other connector 406. There can also be another indentation 418 at the temple 402 to receive the bottom clip 416. This can further enhance the alignment process and to secure the connection.

[00066] In FIG. 7, the other connector 406 is tethered to a plug 408, which can be inserted into a portable device 410. The portable device, for example, can be a cell phone. This type of non-standard clip-type connector could be easily applied to the temple with one hand, for example, while the user is driving a car.

[00067] A number of non-standard connectors have been described. In another embodiment, the contacts are based on standard connectors, which can be off-the-shelf connectors. FIGS. 8A-E show a number of examples of such connectors.

[00068] In one embodiment, the standard connector is a standard cylindrical plug located at the end of a temple. From a different perspective, the temple molds around the end of the plug. FIG. 8A shows one such embodiment. The plug 450 can be a standard audio connector or a 3-wire or three terminal plug, such as a 3.5 mm male stereo mini-phone plug. The 3 wires for such a plug are typically one for ground, the

other two applicable for two signals, such as for creating stereo effects. FIG. 8A also shows the three wires, 452, 454 and 456, inside the temple, extended from the plug 450. These wires are for connection to electrical components of the glasses.

[00069] In one embodiment, the cylindrical plug 450 shown in FIG. 8A can be protected, encapsulated or shrouded. Or, at least a portion of the plug is protected, encapsulated or shrouded. Such protection can be for esthetic reasons, or to prevent the plug from scratching the face of the user when the user is putting on the pair of glasses.

[00070] Instead of a three terminal plug, other types of standard cylindrical plugs applicable to different embodiments of the present invention include a serial connector with 3 pins, typically one for ground, one for transmitting data (Tx) and the third for receiving data (Rx); or (b) a 2-wire connector, one served as ground, the other for carrying, such as power and modulated signals.

[00071] In yet another embodiment, instead of a cylindrical plug, the standard connector at the end of a temple of a pair of glasses is a USB or a FIREWIRE connector.

[00072] A number of embodiments have been described where the standard connector(s) at the glasses are male connectors. In yet another embodiment, the standard connector(s) in the glasses are female connectors. For example, there can be a 3.5 mm female stereo mini-phone plug at the end of a temple of a pair of glasses. At least a portion of the female connector can be protected, encapsulated or shrouded. For example, the female connector can be recessed within the end of a temple.

[00073] FIGS. 8B-8E show different examples of standard connectors located or partially embedded not at the end of a temple of a pair of glasses, but, for example, on the side of the temple, such as on the inside surface or the outside surface of a temple. FIG. 8B shows a 0.10" header plug 460, commonly known as a MOLEX connector, on such a surface. FIG. 8C shows a female mini-phone plug 465 on such a surface. FIG. 8D shows a card connector 470 to receive a card 472, such as a removable media card (e.g., memory card). There can be a cover 474 to secure and/or protect the media card 472 in place after it is inserted into the card connector 470. FIG. 8E shows a female

USB connector 480 on the inside surface of a temple 482 to receive a male USB connector 484.

[00074] A number of standard and non-standard connectors have been described. Other types of connectors can also be used. In one embodiment, there is a connector adapter, which serves to transform such other type of connectors to a different interface. For example, an adapter can be a cord with one type of connector at one end and a different type of connector at the other end.

[00075] In one or more of the above embodiments, the glasses can access audio signals from another device through a connector at the glasses. The another device can be an iPod™, a Sony Walkman™, other types of multimedia asset players, or just a radio.

[00076] In one embodiment of the invention, the glasses have a storage medium (i.e., memory). The memory can be on a printed-circuit board and, for example, store up to 256 MB. The memory can be a built-in or removable flash memory. The memory can be coupled to a device external to the glasses through one or more connectors at the glasses. As an example, a 256 MB flash memory is in one of the temples of a pair of glasses, and there is a USB connector at the free end of that temple to couple to an external device.

[00077] With the embedded storage medium, the glasses can upload information in the memory to or download information into the memory from an external device, such as a computer. A user can plug the glasses into the computer through a connector, either directly, or indirectly, with, for example, an intermediate wire in between. The user can store files in the glasses. Such an embodiment should reduce the chances of the user losing the files because the user has to lose the glasses as well.

[00078] In yet another embodiment of the invention, a pair of glasses includes a multimedia asset player, such as a MP3 player. FIG. 9 shows some of the electrical components for a MP3 player 500 according to an embodiment of the invention. The player 500 includes a speaker 502 and a data bus 512, which facilitates data transfer among, for example, a processor 506, a storage device 510, and a coder/decoder

(CODEC) 504. The processor 506, which can be a microprocessor or controller, controls the operation of the player 500. The storage device 510 stores the multimedia assets, such as MP3 files, or other types of media data that are appropriately formatted. In one example, the MP3 files are digitally encoded songs or other types of audio signals. The storage device 510 can include a number of separate storage elements. For example, the device 510 can be a flash memory device, or a minidisk device, and a cache, which can improve the access time and reduce power consumption of the storage device. The storage device 510 typically also includes a Read-Only Memory (ROM), which stores programs, utilities or processes to be executed in a non-volatile manner. The player 500 can also include a RAM, such as for the cache.

[00079] Once a media asset, such as a song, is selected to be played, the processor 506 would supply the asset to the CODEC 504, which decompresses the asset and produces analog output signals for the speaker 502. In one embodiment, the bus 512 is also coupled to an input/output device 508, which would allow a user to upload songs in the glasses to an external instrument, such as a computer, or download songs from the instrument to the glasses.

[00080] There are different approaches to select a song. In one embodiment, the songs or the media assets can be categorized in the MP3 player, and the categorization can be hierarchical, with multiple levels in the hierarchy. To illustrate, assume that there are three levels. The top level can be the name of the singer; the second level can be the time period when the asset was produced, and the third level can be the names of the songs. The entries, such as the name of the singer, can be abbreviated. There can be a small display and a control knob to allow a user to scroll down entries in a level. By pushing the knob, the user selects an entry, which can lead the user to a lower level. There can be an entry for moving up a level also. In another embodiment, the display is a touch-screen display, allowing entries to be entered directly on the display. In yet another embodiment, entries can be selected based on voice recognition.

[00081] A number of embodiments have been described with the glasses having a connector. In one embodiment, the glasses can have more than one connector. For

example, a pair of glasses with two connectors also has a speaker. One connector is, for example, at a broad side of a temple, as in FIG. 8D. The connector can be for coupling to multimedia assets of a MP3 player. Another connector is, for example, at the end of a temple, as in FIG. 8A. That connector can couple power to the glasses. The speaker can play the multimedia assets accessed from one connector, based on power from another connector.

[00082] As described, power (e.g., external power source) can be coupled to the glasses through a connector. In one embodiment, the power source is embedded inside or inserted into the glasses. Different types of power sources are applicable. For example, the power source can be a battery, a fuel cell, a solar cell, or a re-chargeable battery. The rechargeable battery can be charged through a connector at the glasses.

**[00083]** In an earlier application, namely, U.S. Provisional Patent Application No. 60/509,631, filed October 9, 2003, and entitled "TETHERED ELECTRICAL COMPONENTS FOR EYEGLASSES," which has been incorporated herein by reference, there can be a base connected to the glasses through a cord. The cord can be just a piece of flexible conductor encapsulated by a flexible insulator. Typically, a cord includes a number of electrical wires or conductors. There can be one or more electrical components in the base, and there can also be one or more electrical components in the cord. The different types of connectors previously described can be located in the base. In one embodiment, a power source is an electrical component in the base tethered to a pair of glasses. In another embodiment, the glasses are tethered to a base that has a connector. The connector is connected to and draws power from an external electronic device. In this embodiment, electrical components in the glasses draw power from the external electronic devices.

[00084] FIG. 10 shows an embodiment where a user 550 is wearing a pair of glasses 552, which include electrical components. There are also tethered electrical components in a base 554, which is connected to the glasses 552 through a cord 556. In addition, there is a wire 558 connected to a connector at the base 554 to a portable electronic device 560. The portable device 560 can be (a) a multimedia device, such as a MP3 player/recorder or a minidisk players, (b) a wireless communication device,

such as a cell phone, or (c) a personal digital assistant, or other types of portable devices with computing and/or entertaining and/or communication capabilities.

[00085] Note that instead of connecting to the portable electronic device 560 through the base 554, in another embodiment, the glasses 552 directly connect to the portable device 560 through a cord.

[00086] In one embodiment, there is an attachment device 562, such as a pin or clip. The attachment device attaches at least a part of the glasses to the user's clothing. The attachment device 562 can serve to attach the cord 556 and/or the wire 558 and/or the base 554 to the user's clothing. The attachment can also be through other mechanisms, such as Velcro.

[00087] In a number of embodiments, the speaker described is assumed to emit audio signals. In one embodiment, the speaker emits ultrasonic signals. The glasses can be used, for example, as an insect repellant by transmitting ultrasound to repel insects, such as mosquitoes. In this embodiment, the one or more speakers broadcast the ultrasonic signals away from the user. In other words, the speakers face outwards, not inwards towards the user. In this embodiment, the glasses, which can include a base, also has a power source to provide power to the speaker. There can also be a control knob to turn the one or more speakers on/off on the glasses. There will be additional discussions on the control knob below.

[00088] In another embodiment, the glasses generating ultrasonic signals can be used to produce audio signals that are more directional. For example, two ultrasonic signals are generated by a speaker in the glasses, with their difference frequencies being the audio signals. The audio signals generated based on mixing the two ultrasonic signals can be much more directional than audio signals directly generated from the speaker.

[00089] Referring back to FIG. 1, in one embodiment, the glasses include a microphone 110. The microphone 110 can be at the end of a temple 104 close to a lens holder 112. Or, the microphone 110 can be in the lens holder 112, located directly adjacent to the temple 104. In yet another embodiment, there can be a small protrusion extending down from the temple to house the microphone.

[00090] With glasses having a microphone, one can use the glasses to record voices into, for example, a storage medium. The storage medium can be in the glasses, or can be in a base or a portable device attached to the glasses.

[00091] Different types of microphones can be used. For example, they can be electret microphones, crystal microphones, resistance microphones, piezoelectric microphones or moving-coil microphones.

[00092] In one embodiment, the glasses with a microphone also include a speaker that can generate directional sound. A user can speak into the microphone and his message can be transmitted from the glasses in a more directional manner.

[00093] In another embodiment, the glasses also include a notification electrical component to provide a notification to the user wearing the glasses. The notification can be to notify, alert or display information to the user. There can be a display located at the inside 114 of the lens holder, or at the vicinity of the junction 116 or the hinge of a lens holder and its corresponding temple facing the user. Or, there can be a display at the inside surface of a temple, or at other locations on the glasses. The display can be one or more light emitting diodes. To alert the user, one or more diodes can blink. The blinking can be of a specific sequence. Instead of diodes, the display can be a liquid crystal display. The display can provide indications or information to the user. For example, a number or a variable-height bar can be shown. Other than visual indications, the notification or alert can be audio, like a beeper.

[00094] In one embodiment, the notification electrical component is for selecting a multimedia asset in a multimedia asset player in a pair of glasses for the multimedia to play. The multimedia asset player can be a MP3 player.

[00095] A number of embodiments of the present invention have been described where electrical signals are transmitted to or from a pair of glasses through a physical connection. In one embodiment, electrical signals are wirelessly coupled to a pair of glasses. The coupling can be short range or long range. The coupling can be directly to the glasses, or to a base connected to a pair of glasses. The glasses with wireless coupling capabilities can be used to couple to a Bluetooth network, the Internet, a WiFi

network, a WiMax network, a cell-phone network or other types of networks. The coupling can also be through a point-to-point link, such as an infrared link.

[00096] FIGS. 11A-11B show examples of some of the electrical components in or tethered to a pair of glasses for wireless connections, according to embodiments of the present invention. In FIG. 11A, a high frequency or RF antenna 602 wirelessly captures high frequency or RF signals for RF transceiver circuits 604. If the transceiver circuits are for a conventional superheterodyne system, the transceiver circuits 604 mix the RF signals down to IF signals. Then the IF signals are processed by baseband circuits. Digital outputs from the baseband circuits are coupled to a processor 608 for analysis and synthesis.

[00097] Outputs from the processor 608 are fed to a D-to-A converter 610 to generate audio signals for a speaker 612. Similarly, audio analog signals from a microphone 614 can be fed to an A-to-D converter 616 to generate digital low frequency signals for the processor 608 and then to the RF transceiver circuits 604. The low frequency signals are up-converted by the RF transceiver circuits 604 and wirelessly transmitted by the antenna 602.

[00098] In another embodiment, digital conversion is moved closer to the antenna. For example, instead of mixing RF into IF signals, the RF transceiver circuits 604 directly perform digital conversion from the RF signals.

[00099] Typically, high frequency filters are used at the front end of the RF transceiver circuits 604 for the RF signals. In one embodiment, to save space, FBAR (film bulk acoustic resonator) duplexer is employed. A set of piezoelectric filters can be used to separate incoming and outgoing signals. For cell phone operation, such filters can enable a user to hear and speak simultaneously. A number of these electronic devices can be on a circuit board in the glasses. Or, some of the devices are in the glasses, while other in the base tethered to the glasses.

[000100] FIG. 11B shows another example of some of the electrical components in or tethered to a pair of glasses for wireless connections according to the present invention. In this embodiment, there does not need to have digital data. A speaker 620 and a microphone 622 are connected to an analog interface circuit 624, which is

coupled to a RF transceiver circuit 626 and an antenna 628. For the speaker application, the transceiver circuit 626 mixes the RF signals down into IF signals, which are converted by the analog interface circuit 624 into analog signals for the speaker 620. Similarly, for the microphone application, its analog signals are converted into the IF signals by the analog interface circuit 624 to be up converted by the transceiver circuit 626 into RF signals for the antenna 628. These types of circuitry are suitable for, such as, simple radios, analog cell phones, CB radios, walkee-talkees, police radios or intercom systems.

[000101] In one embodiment, most of the electrical components are not in the glasses. The pair of glasses includes an antenna to capture the wireless signals, and a connector. The wireless signals captured are transmitted through the connector to electrical circuits external to the glasses.

[000102] A number of processors have been described. The processors can use different types of operating systems. In one embodiment, Symbian Operating Systems are used. In another embodiment, operating systems, such as TinyOS, are used. The operating system could be programmed in C++ and then compiled into machine codes.

[000103] For privacy protection, signals can be encrypted before transmission. Encryption can take significant computation power, and may generate a fair amount of heat. In one embodiment, encryption capabilities are located in a base tethered to the glasses. There can be a fan inside the base. The fan can be turned on during encryption. In another embodiment, the fan is activated during other high capacity uses for heat dissipation purposes.

[000104] In yet another embodiment, there is a fan in the glasses. The fan is located at a temple of the glasses, in the region close to its lens holder. The fan is used to cool the wearer of the glasses.

[000105] In one embodiment, a pair of glasses has access to voice recognition software. The software can be embedded in (a) the glasses, (b) a base tethered to the glasses, (c) a portable device wired or wirelessly coupled to the glasses or to the base, or (d) a computing system wired or wirelessly coupled to the glasses. Or, the software or firmware can be in more than one of the above devices.

[000106] Glasses that can couple to signals wirelessly can be used in different applications. For example, the glasses can be a cell phone wireless head set, such as a Bluetooth cordless headset. Such short-distance wireless technologies allow the headset to connect to the user's cell phone without a wire. This would allow the user to drive, eat or perform other functions without getting tangled in a pesky wire.

[000107] In one embodiment, the cell phone is a VOIP (voice over Internet protocol) phone.

[000108] In one embodiment, for the glasses operating as a cell phone head set, the head set includes active noise cancellation mechanism. For example, the glasses include two microphones. One microphone is for capturing the voice of the user. But the microphone captures ambient noise also. It can be embedded in a protrusion extending from the end of the temple close to a lens holder, towards the mouth of the user, as the microphone 110 in FIG. 1. Another microphone can be located at the top of one of the lens holders pointing away from the mouth of the user. This microphone is for capturing ambient noise. As a first order approximation, outputs from the two microphones could be subtracted from each other to provide voice signals with noise reduced.

[000109] In yet another embodiment, the glasses with wireless coupling capabilities also have a multimedia asset player, such as a MP3 player. The glasses can be used to receive music directly in digital format over, for example, a data-capable network of a mobile operator. The music can be received, for example, at a speed of 16 Kbits per second, providing sound quality close to compact disc. If the music is transmitted in a compressed manner, such as in a MP3 format, then the music data can be received at a much lower speed. In one embodiment, the glasses also have a microphone and can serve as a cellular phone or a wireless headset of a cellular phone.

[000110] In yet another embodiment, the glasses can serve as a radio, again through electrical components in or tethered to the glasses. In this embodiment, the glasses can include a tuner with one or more control knobs. The knobs can be used to select channels and to set the volume.

[000111] In one embodiment, a pair of glasses allows personalization by including a preference indicator. The indicator allows a user to provide his preference, such as on whatever is being output by the glasses. In one example, the glasses also has a radio having a speaker and with electrical components for wireless connection. In this example, the indicator can be used by the user to provide his preference regarding whatever is being played by the radio at that time. This preference can be wirelessly transmitted from the glasses to a third party. To illustrate, when the user is listening to a piece of music, the user can indicate he likes the piece of music by pressing a control knob on the glasses. This piece of preference information is then transmitted and received by a service provider, which is then informed of the user's preference. Instead of a control knob, in another embodiment, the preference indicator is a system with a microphone and voice recognition software. The user can indicate his preference vocally.

[000112] In another example regarding the personalization process, the glasses can serve as a multimedia asset player, such as a MP3 player. The song that the user has shown preference can be stored in a storage device, which can be in the glasses.

[000113] FIG. 12 shows a process 650 according to one embodiment of the present invention for a personalized radio.

[000114] Initially, a pair of glasses according to the present invention receives 652 a piece of music from a radio station. That piece of music is stored 654 in a buffer or a temporary storage area. This temporary storage area can be in the glasses or tethered to the glasses. The piece of music is also sent 656 to a speaker in the glasses.

[000115] Assume that the user likes the music. Based on the preference indicator, the user shows his preference. After the glasses receive 658 an indication of the user's preference, the glasses determine 660 the song corresponding to the indication. That piece of music can then be moved 662 from the buffer to a permanent storage area, such as into a flash memory. This would then allow the user to subsequently access the piece of music.

[000116] There are different ways to determine 660 the song or the content being played by the radio corresponding to the indication. For example, one rule is that when

the user pushes the preference button or voices his preference, the song (or media asset or media file) that is being played is the one the user likes. Since the operating system knows what song is being played at what time, based on the rule, the song of preference is determined. Another rule is that when the user shows his preference, and there is no song being played at that instance, the song immediately preceding the break is the song of preference.

[000117] In another embodiment, the glasses can get 664 an identification for the song of preference. For example, the glasses can ask the user to provide an identification for the piece of music. This identification can be the type of music, the singer, the name of the music or other identification. In another embodiment, there can be meta data embedded, such as in the beginning part of the music (or media asset). Having such meta data embedded is not uncommon for music in digital format. The meta data can include identifications for the music. The glasses can get 664 such identification. Based on the identification, the song is categorized 666 accordingly, such as grouped with other songs having the same identification. Such categorization process would enhance the ease of accessing the song by the user at a later time.

[000118] A number of control knobs have been described. FIG. 13 shows a number of attributes 700 regarding control knobs according to the present invention. The knobs can be of different physical structure 702. For example, a control knob can be a roller, a switch or a push-button. A control knob serving as an up/down controller can use two buttons, or a roller.

[000119] A control knob can be more intelligent 704. For example, a push-button control knob can serve different purposes depending on the duration the knob is being pushed. If a user pushes it for more than three seconds, the knob serves as an on-off toggle switch. In another example, a knob can serve multiple purposes, and the specific purpose depends on the number of times the knob is pushed.

[000120] A knob can also be programmed. A user can connect the glasses to a computer and program the knob accordingly. For example, one can program a knob such that if the knob is pushed more than three seconds, the knob would serve as an on/off switch for the glasses.

[000121] The location 706 of a control knob can vary for different applications. A control knob can be located on the glasses. A control knob can be on the top, the side or the bottom of the temple. A control knob can be located at the inside of a temple facing the user. Assume that there are a number of control knobs and all of them are on the edges of a temple, except one. By being at a position different from other control knobs, this knob can serve a specific purpose. For example, it can be an on/off control knob. In yet another embodiment, a control knob can be located in a base tethered to the glasses.

[000122] The number 708 of control knobs can vary depending on operations. For example, there is an on/off control knob and a volume up/down control knob. If the glasses are used for cell phone headset application, in one embodiment, there is also an answer/hang-up control knob. If the glasses serve as a radio, in one embodiment, there is also a tuning control knob, which can be two push buttons. If the glasses serve as a CD player, in one embodiment, there is a play control knob, a stop control knob, and a skip forward/backward control knob. If the glasses serve as a multimedia asset player, such as a MP3 player, in one embodiment, there is a save-this-song control knob, a skip-forward/backward-song control knob and a select-song-to-play control knob.

[000123] A number of embodiments of the present invention have been described regarding audio signals. In one embodiment, the glasses further serve as a camera.

[000124] FIG. 14 shows one embodiment of electrical components in a pair of glasses with image capturing capabilities. A processor 752 is coupled to a CCD interface chip 754 and then to a CCD chip 756. Images focused by a lens 758 are captured and collected by the CCD chip. In another embodiment, there is also be a flash controller 760 connected to the processor 752 to control a flash 762.

[000125] In one embodiment, a number of pixels of the CCD chip 756 are used as light sensors. The pixels can be used to adjust the sensitivity of the CCD chip 756 based on the amount of ambient light. For example, if the outside environment is dim, it would take a longer period of time to collect enough charges by the CCD chip 756 to re-

create the image. This implies that the integration time of the CCD chip 756 should increase.

[000126] In yet another embodiment, the camera can pertain to a video camera. The capacity of the memory 753 increases so as to store the video images.

[000127] In one embodiment, the glasses do not offer adjustment on the image distance. The CCD chip 756 can be located, for example, at the focal point of the lens 758. In another embodiment, there is an image distance control knob. For example, a mechanical lever can be pre-programmed or pre-set to move the lens to one or more different positions. One position can be for close-up shots, such as objects from 2 to 4 ft, and another for scenic or vista images, such as objects greater than 6 ft.

[000128] Depending on the embodiment, electrical components of a camera can be in a pair of glasses, and/or a base tethered to the glasses, and/or a portable device tethered to the glasses or to the base. For example, the memory 753 can be in the base tethered to the glasses.

[000129] The location of the lens 758 can vary depending on the embodiment. In one embodiment, referring to FIG. 1, one location is at the bridge of the glasses, with the lens of the camera facing forward. In this situation, what the user sees is substantially what the captured image would be. In other words, in a general sense, what the user sees is what the user gets. With such an embodiment, it is relatively easy for a user to take pictures, hands-free. In another embodiment, another location for the lens 758 are at a side portion adjacent to a lens holder, before the joint of the corresponding temple, such as at 116 in FIG. 1. Again, the lens of the camera faces forward. Some of the electrical components of the camera can be in that location, and other components in the temple 104. These components are electrically connected through one of the joints, such as with a flexible pc board. In yet another embodiment, the lens 758 can face sideways and outwards in a temple of a pair of glasses, towards the left or right side of the user.

[000130] Regarding storing the images, in one embodiment, the images are stored locally. One approach to determine which image to store is the first-in-first-out approach. Once the camera is turned on, the camera takes pictures continually in an

automatic mode, such as once every few seconds. When the memory becomes full or under other pre-set or pre-programmed condition, the first picture stored will be deleted when the next picture comes in. In another embodiment, the digital content in one picture is compared to the digital content in, for example, the fifth picture further down. If the difference between the two is not more than a pre-set threshold, the four pictures in between will be deleted. One approach to determine the difference is by comparing the total charges collected by the CCD chip for the two images. If the two sets of charges do not differ by more than a certain threshold, the images in between would be deleted.

[000131] The images captured can also be stored at a remote site. For example, the glasses can upload the images to a computer, wirelessly or through a wired connection from a connector at the glasses.

[000132] FIG. 15 shows an operation 800 of taking certain actions based on images captured by a pair of glasses with a wireless transceiver, according to one embodiment of the invention. This operation can be used by a police officer in patrol. Before the officer gets out of his patrol vehicle to confront a suspect, the officer can inform the station. At that point, the camera is turned on 802.

[000133] There can be different approaches to turn on the camera. In one embodiment, an operator at the station can remind the officer to turn on the camera. Or, the operator can remotely turn on the camera. In yet another embodiment, the camera can be automatically turned on under certain condition. One such condition is that if the camera is out of the patrol vehicle, the camera is automatically turned on. With the glasses having the capability to wirelessly communicate with the patrol vehicle, one method to detect if the glasses are out of the patrol vehicle is based on the wireless signal strength of the glasses. The patrol vehicle can detect the signal strength of the wireless signals, which depends on the distance between glasses and the vehicle. A threshold can be set. If the signal strength is below the preset threshold, the glasses would be assumed to be out of the car, and the camera would be automatically turned on.

[000134] After the camera is turned on 802, the glasses start to continually take 804 pictures, such as once every few seconds. The pictures taken are automatically transmitted back 806 to the patrol vehicle in a wireless manner. In this situation, the patrol vehicle serves as a hub, which stores the pictures. Then, the hub re-transmits 808 the pictures back to the station. Note that the pictures can be compressed by standard algorithms before they are transmitted. This compression mechanism can be performed by a computer in the patrol vehicle. When the station gets the pictures, they are de-compressed before being viewed, such as by the operator. The pictures enable the operator at the station to see what the officer is confronting. This effectively allows the operator at the station to perform real-time monitoring of or for the officer. If it is a high risk situation, the operator can quickly react 810, such as by dispatching additional support for the officer.

[000135] Regarding ownership of the glasses, the user can own the glasses. In one embodiment, the user leases the glasses from a provider. For example, the user leases a ski goggle with a camera. After the user turns on the camera, as the user skis, the goggle automatically takes pictures. Later, the user can return the goggle to the provider or a kiosk, where the pictures can be retrieved and/or stored. Alternatively, the goggle can include a wireless transceiver and the images could be uploaded continually or automatically to the provider or the kiosk via a wireless network. The provider or the kiosk can transmit the images to a website, such as a website associated with the user. In another embodiment, the user picks up hardcopies of the images, e.g., a CD with the images or a DVD with the video, from the provider or the kiosk.

[000136] In one embodiment, the glasses allow the user to enter his identification. This can be done, for example, through a control knob at the glasses. Such identification is then linked to the images. Based on the identification, the user can return to the provider or kiosk at a subsequent time to pick up the images previously left behind.

[000137] In yet another embodiment, the pair of glasses with a camera also has a speaker and a wireless transceiver. It can be used to remotely control or direct the user

wearing the glasses. FIG. 16 shows one such operation 850 according to one embodiment.

[000138] To illustrate the operation 850, assume that the user is a paramedic helping a patient. The glasses continually take pictures 852 of objects directly in front of the paramedic, such as images around four feet away from the eyes of the paramedic. The pictures are wirelessly transmitted 854 to a remote site, such as a hospital, to be viewed by a doctor. Again, this transmission can be a two-step process. For example, pictures can be transmitted to the paramedic's ambulance, which can then re-transmit to the remote site. The first transmission from the glasses to the ambulance can be through a low-power, short-range, broadband, wireless transmission protocol. The second transmission from the ambulance to the hospital can be through a much longer-range, higher power, broadband, wireless transmission protocol. Again, compression and de-compression techniques can be used to enhance the rate of transmission by reducing the amount of data to be transmitted.

[000139] Based on the images, the doctor sends out voice messages to the paramedic. These messages are wirelessly transmitted to and received 856 by the glasses. The speaker in the glasses outputs 858 the messages to the paramedic.

[000140] In another embodiment, the glasses also have a microphone, which allows the paramedic to communicate directly with the doctor also.

[000141] In one embodiment, the glasses can take pictures and can be a multimedia asset player. Pictures and the multimedia assets can share the same memory storage device. In this situation, the capacity for the multimedia assets and pictures can be interrelated. For example, a user can take more pictures if there are less multimedia assets, such as fewer songs in the storage device.

[000142] A number of embodiments have been described regarding electrical components in the temples of glasses. The locations selected are for illustration purposes. In other embodiments, some of the components are embedded fully or partially in other areas of the glasses, such as the lens holders or the bridges of the glasses. For example, there are glasses where there are shields at the edges of the lens holders of the glasses. These shields can wrap around, or better conform to the

profile of, the face of the wearer. There can be transparent or translucent windows on these shields also. The shields are not limited to be in primary frames. They can be in, for example, fit-over glasses, auxiliary frames or safety glasses. To illustrate, in fit-over glasses, such shields can go over or cover at least a portion of the primary frames. One or more electrical components can be in such shields.

[000143] Note that in one embodiment, a pair of glasses does not have to include lenses. Also, a number of embodiments have been described with a pair of glasses tethered to a base. In one embodiment, a pair of glasses includes a base and a cord connecting the base to the glasses.

[000144] In yet another embodiment, a pair of glasses also includes a sensor. FIG. 17A is a chart 900 that depicts examples of sensors in the glasses.

[000145] In one embodiment, the sensor is a "being worn" sensor. The "being worn" sensor indicates whether the glasses are being worn by its user. The "being worn" operation can be performed using, for example, a thermal sensor, a motion detector, a stress sensor or a switch.

[000146] In one embodiment, a motion detector is used as a "being worn" sensor. A threshold can be set, such that if the amount of motion exceeds the threshold, the eyewear is assumed to be worn. The motion detector can, for example, be achieved by a mechanical means or an accelerometer.

[000147] In another embodiment, the "being worn" sensor includes two thermal sensors. One sensor can be at approximately the middle of a temple, such as in a region that touches the head of the user wearing the glasses. The other sensor can be at the end of the temple, close to its hinge. If the temperature differential between the two sensors is beyond a certain preset value, the eyewear would be assumed to be worn. The differential is presumed to be caused by a person wearing the pair of glasses.

[000148] In yet another embodiment, the "being worn" sensor includes a stress sensor at the hinge of the temple. The assumption is that when the eyewear is worn,

the hinge is typically slightly stretched because typically, the width of the head of the user is slightly wider than the width between the temples when the two temples are in the extended positions. If the value of the stress sensor is beyond a certain preset value, the glasses would be assumed to be worn.

[000149] In a further embodiment, the "being worn" sensor can be a switch. For example, at the hinge between a temple and its corresponding lens holder, there is a switch. When that temple is fully extended outwards, the switch is turned on. The switch can be a pin. When the temple is fully extended outwards, the pin is pressed. When both temples are fully extended outwards, in one embodiment, the glasses would be assumed to be worn by the user.

[000150] In one embodiment, another type of sensor is an environmental sensor. The environmental sensor can sense environmental conditions, such as one or more of ultraviolet radiation, temperature (e.g., ambient temperature), pressure, light, humidity and toxins (e.g., chemicals, radiation, etc.).

[000151] In another embodiment, another type of sensor is a condition sensor. The condition sensor can sense the conditions of the user of the glasses. Examples of physical sensors include sensing one or more of distance traveled, location, speed, calories consumed, temperature and vital signs associated with the user of the glasses. The distance traveled could represent the horizontal distance traveled or the vertical distance (i.e. elevation) traveled. The speed can be the rate of movement along the horizontal distance traveled and/or the vertical distance. In yet another embodiment, the condition sensor can sense the emotional conditions of the user of the glasses.

[000152] The sensors can be provided in a redundant or fault-tolerant manner. For example, sensors can come in pairs in the glasses. When one malfunctions, the other one will take over its operation. In another embodiment, the sensor information can be processed in a differential manner to examine changes to the sensor information. The sensors can by powered by a battery, solar energy, or kinetic energy. For reduced power consumption, the sensors can remain in a low-power state unless data is being acquired by the sensors. In yet another embodiment, two or more of the auxiliary

sensors can communicate with one another (wired or wirelessly) to exchange data or control information.

[000153] A number of embodiments have been described regarding one or more electrical components at least partially embedded in a pair of glasses. In one embodiment, one or more electrical components are at least partially embedded in a temple tip of a pair of glasses. Temple times are particularly common for wire or metal frames which have wire or metal temples. The pair of glasses has a first and a second lens holders for receiving lenses. Each of the lens holders has a first side and a second side. The pair of glasses has a bridge element that couples the first side of the first lens holder to the second side of the second lens holder. The pair of glasses also includes a first temple and a second temple. The first temple is pivotally secured to the second side of the first lens holder through a joint, while the second temple is pivotally secured to the first side of the second lens holder through another joint. A temple typically has two ends, a first end and a second end. The first end can be the end that is pivotally secured to a lens holder through a joint, and the second end can be the other end of the temple. It is not uncommon that a temple includes a main body and an enclosure that grabs onto the main body of the temple. The second end is typically where the enclosure grabs onto the main body. The enclosure can be made of a different material than the main body of the temple. In one embodiment, such an enclosure is a temple tip, and there is an electrical component, partially or fully, embedded in the tip. There can also be a connector, such as the connector 300 shown in FIG. 5, at the temple tip. In another embodiment, the temple tip can include a female connector, which can be similar to the female connector 310 shown in FIG. 6B. As the temple tip grabs onto the main body of the temple, the female connector can make electrical contact with a male connector at the main body of the temple. Typically, particularly before a pair of glasses has been extensively worn, the temple tip can be removed and re-inserted back on to the main body of the temple without a lot of difficulties. Such a temple tip can be an after-market component, with different temple tips having different electrical components to serve different functions.

[000154] FIG. 17B is a diagram of a temple arrangement 910 according to one embodiment of the invention. The temple arrangement 910 includes a temple 912 that is associated with a pair of eyeglasses. Over the end of the temple 912 that is opposite the associated lens holder, a temple tip 914 is provided. The temple time 914 can be held to the temple 912 by frictional forces and/or adhesive. The temple tip 914 includes at one electrical component 916 that is at least partially embedded therein. The temple tip 914 can be manufactured and delivered to resellers or retailers as such. Alternatively, the temple tip 914 can be separately provided as an optional replacement temple time for a conventional temple time. Hence, as after manufacture upgrade to the eyewear can be had through replacing the conventional temple tip with the temple time 914. The colors and shapes of the temple tip 914 can vary widely. In the after manufacturing environment, the reseller or retailer can be provided with a range of different colors and shares so that a user can receive a replacement tip that reasonably matches the color and shape of the temple or that provides an altered appearance as desired by the user.

[000155] Besides a replacement temple tip such as illustrated in FIG. 17B, a temple tip can also be effectively modified by a fit-over temple tip or cover. FIG. 17C is a diagram of a temple cover 920 that fits over and at least partially covers a conventional temple (e.g., temple 912) according to one embodiment of the invention. As an example, the temple cover 920 can be a fabric or other material that slides over and at least partially covers the conventional temple tip, such as a sock or sleeve. The temple cover 920 includes at one electrical component 922 that is either attached thereto or at least partially embedded therein. The temple cover 920 can also include an opening 924 so as to received the end of the temple. The temple cover 920 can be held to the temple by frictional forces and/or adhesive. FIG. 17D is a diagram of a fit-over temple 926 that fits over and at least partially covers a conventional temple according to one embodiment of the invention. For example, the fit-over temple 926 can fit over and at least partial cover a conventional temple tip. The fit-over temple 926 includes at one electrical component 928 that is either attached thereto or at least partially embedded

therein. The fit-over temple 926 can also include an opening 930 so as to received the end of the temple. The fit-over temple 926 can be held to the temple by frictional forces and/or adhesive. As an example, the fit-over temple 926 can be plastic or other material. The colors and shapes of the fit-over temple tip 926 can vary widely. In the after manufacturing environment, the reseller or retailer can be provided with a range of different colors and shares so that a user can receive a replacement tip that reasonably matches the color and shape of the temple or that provides an altered appearance as desired by the user.

[000156] In one embodiment, the temple tips according to the invention can further include a connector or cable to facilitate electrical connection with the at least one electrical component that is either attached to the temple tip or at least partially embedded therein.

[000157] In one embodiment, an electrical component is a component of an electrical circuit, and the electrical circuit is for performing at least a desired, intended or predetermined function.

[000158] A number of embodiments have been described above for an eyeglass frame, i.e., primary frame, are also applicable to an auxiliary frame. An auxiliary frame can attach to a primary frame through different techniques, such as using clips. Another technique to attach an auxiliary frame to a primary frame is by way of magnets. Examples of using magnets as an attachment technique can be found, for example, in U.S. Patent 6,012,811, entitled, "EYEGLASS FRAMES WITH MAGNETS AT BRIDGES FOR ATTACHMENT."

[000159] A number of embodiments have been described where one or more electrical components are at least partially embedded in a pair of glasses. In yet another embodiment, the one or more electrical components are at least partially embedded in an eye mask.

[000160] FIG. 18 shows one embodiment 925 where one or more electrical components are at least partially embedded in an eye mask 927. The eye mask 927

includes a piece of fabric that is opaque so that when the mask is worn, the mask wraps around the eyes to block light from entering into the eyes of the user.

[000161] The embodiment 925 includes a wrapping mechanism to hold the fabric onto the head of a user so that when the mask is worn by the user, the mechanism allows the fabric to have a relatively tight and comfortable fit over the face of the user. In one approach the wrapping mechanism is achieved with the fabric in the shape of a band and having a certain degree of elasticity. When the mask is worn by the user, the elasticity of the fabric allows the mask to establish a relatively tight fit over the face of the user. In another example, the fabric is a long piece of material. The wrapping mechanism includes a clip or Velcro at the two ends of the piece of material to tie the two ends together. In another example, the wrapping mechanism includes two elastic pieces of elastic materials at the two ends of the fabric. To wear the mask, each elastic piece of material goes over one of the ears of the user so that the fabric establishes a relatively tight fit over the face of the user. In yet another embodiment, the mask 927 includes a notch 935 to accommodate the nose of the user. In another embodiment, there can be additional padding in the vicinity of the one or more electrical components so that if an electrical component is pressed against the user, the padding serves as a buffer or cushion.

[000162] In one embodiment, a speaker 929 can be at least partially embedded in the mask 927, and can be positioned close to and facing one of the ears of the user. The speaker 929, through an electrical connector, is electrically connected to a cable 931. The cable 931 can also have a connector 933 at its distal end. The connector 933 can be plugged into another device, such as a MP3 player or a CD player. After putting on the mask, with the connector 933 plugged into the another device, the user would be able to hear, for example, audio sounds such as music. The eyemask 925 can be applied to different areas. For example, the user can be on a plane, and would like to rest. The user can put on the eyemask 925, and plug the connector 933 into a media outlet at an armrest of her seat in the plane. Thus, the user can enjoy music

while taking a rest. The embodiment 925 could also include a plurality of speakers, such as one for each of the user's ears.

[000163] In another embodiment, the eyemask 927 includes the speaker 929 and a battery that is electrically connected to the speaker 929. The battery can be in a pocket on the eyemask and can be replaceable. The battery can also be a rechargeable battery, such as a lithium-ion battery, and there is a connector at least partially embedded in the eyemask. The connector can be used to recharge the battery.

[000164] FIG. 19 shows another embodiment 950 where one or more electrical components are at least partially embedded in a night cap 952. In one embodiment, the cap 952 is at least partially made of fabric. In another embodiment, the cap 952 is entirely made of fabric. The cap includes a wrapping mechanism. When the cap is worn, the wrapping mechanism holds the cap onto the head of the user, and allows the cap to have a relatively tight and comfortable fit over the head of the user. Again the wrapping mechanism can be an elastic band at the base 962 of the cap 952. Or, the wrapping mechanism can include clips or Velcro as previously described.

[000165] The cap can include at least one speaker 954, which is at least partially embedded in the cap 952. When the cap 952 is worn by a user, the speaker 954 is positioned close to and facing one of the ears of the user. The speaker 954 can, for example, be electrically connected through a connector to a device 962 in a pocket 960 on the cap 952. The electrical connection can be through a cable 956 external to the cap 952. The cable 956 also can have a connector 958 to be plugged into the device 962. In another embodiment, the cable 956 is embedded in the cap. The device 962 can be an asset player, such as a MP3 player, with a battery. Through the connector 958, audio signals from the device 962 can be received by the speaker 954 and heard by the user. There can be one or more additional pockets on the night cap for one or more additional electrical components. When worn, the night cap does not have to cover the eyes of the user. In yet another embodiment, when worn, the night cap further covers the eyes of the user, as shown in FIG. 19. In one embodiment, the

embodiment 950 further includes padding in the vicinity of an electrical component to serve as a buffer or cushion between the user and the electrical component.

[000166] A number of embodiments have been described involving a speaker in an eyemask or a night cap. In one embodiment, the audio output from the speaker can serve to cancel the environmental sounds in the vicinity of the user. For example, if the user is on an airplane, the surrounding environmental sound has a relatively high level of white noise. This white noise can be detected by a pickup device and cancelled by noise cancellation circuitry provided within the eyemask or night cap. Namely, the audio output from the speaker serves to cancel the white noise of the user's environment. In another embodiment, the electrical component embedded or partially embedded is not a speaker, but can be a sensor, which can sense a physiological function of the user.

[000167] The various embodiments, implementations and features of the invention noted above can be combined in various ways or used separately. Those skilled in the art will understand from the description that the invention can be equally applied to or used in other various different settings with respect to various combinations, embodiments, implementations or features provided in the description herein.

[000168] A number of embodiments in the invention can be implemented in software, hardware or a combination of hardware and software. A number of embodiments of the invention can also be embodied as computer readable code on a computer readable medium. The computer readable medium is any data storage device that can store data which can thereafter be read by a computer system. Examples of the computer readable medium include read-only memory, random-access memory, CD-ROMs, magnetic tape, optical data storage devices, and carrier waves. The computer readable medium can also be distributed over network-coupled computer systems so that the computer readable code is stored and executed in a distributed fashion.

[000169] Numerous specific details are set forth in order to provide a thorough understanding of the present invention. However, it will become obvious to those skilled

in the art that the invention may be practiced without these specific details. The description and representation herein are the common meanings used by those experienced or skilled in the art to most effectively convey the substance of their work to others skilled in the art. In other instances, well-known methods, procedures, components, and circuitry have not been described in detail to avoid unnecessarily obscuring aspects of the present invention.

[000170] Also, in this specification, reference to "one embodiment" or "an embodiment" means that a particular feature, structure, or characteristic described in connection with the embodiment can be included in at least one embodiment of the invention. The appearances of the phrase "in one embodiment" in various places in the specification are not necessarily all referring to the same embodiment, nor are separate or alternative embodiments mutually exclusive of other embodiments. Further, the order of blocks in process flowcharts or diagrams representing one or more embodiments of the invention do not inherently indicate any particular order nor imply any limitations in the invention.

[000171] Other embodiments of the invention will be apparent to those skilled in the art from a consideration of this specification or practice of the invention disclosed herein. It is intended that the specification and examples be considered as exemplary only, with the true scope and spirit of the invention being indicated by the following claims.

[000172] Other embodiments of the invention will be apparent to those skilled in the art from a consideration of this specification or practice of the invention disclosed herein. It is intended that the specification and examples be considered as exemplary only, with the true scope and spirit of the invention being indicated by the following claims.

CLAIMS

1. A pair of glasses for a user, comprising:
a speaker at least partially embedded in the glasses;
an electrical connector at least partially embedded in the glasses; and
an electrical conductor electrically coupling the speaker to the connector.

2. A pair of glasses as recited in Claim 1, wherein
the pair of glasses includes at least one temple; and
the speaker, the electrical connector and the electrical conductor are embedded in the temple.

3. A pair of glasses as recited in Claim 1, wherein
the pair of glasses includes at least one temple and a lens holder;
the temple includes two ends, with one end close to the lens holder;
the end of the temple that is close to the lens holder is wider than the other end; and
the speaker is located in the vicinity of the end of the temple that is close to the lens holder.

4. A pair of glasses as recited in Claim 1 further comprising a circuit board embedded in the glasses, and at least a portion of the electrical conductor is on the circuit board.

4A. A pair of glasses as recited in Claim 4, wherein the circuit board is made of flexible materials.

5. A pair of glasses as recited in Claim 1 further comprising a tube, the tube extending from the speaker to guide sound generated by the speaker to one of the ears of the user.

6. A pair of glasses as recited in Claim 5, wherein the tube can be rotated.

7. A pair of glasses as recited in Claim 5, wherein the tube is retractable, allowing the length of the tube to vary.

8. A pair of glasses as recited in Claim 5, wherein the end of the tube includes a plug to be inserted in an ear of the user.

9. A pair of glasses as recited in Claim 5 further comprising a funnel at the output of the speaker to guide the sound generated by the speaker into the tube.

10. A pair of glasses as recited in Claim 1, wherein
the pair of glasses includes two temples;
the pair of glasses further includes a second speaker;
each of the temples has at least one speaker; and
the speakers generate stereo effects.

11. A pair of glasses as recited in Claim 1, wherein the connector is not a standard connector.

12. A pair of glasses as recited in Claim 1,
wherein the pair of glasses includes at least one temple and a lens holder,
wherein the temple includes two ends, with one end close to the lens holder, and
wherein the connector is located in the vicinity of the end of the temple that is not close to the lens holder.

13. A pair of glasses as recited in Claim 12, wherein the connector includes at least one conductive pad at one end of the temple.

14. A pair of glasses as recited in Claim 13, wherein the connector can be received by a female connector, the female connector having at least one conductive sheet to be in contact with the conductive pad.

15. A pair of glasses as recited in Claim 14, wherein the temple and the female connector include an alignment mechanism to guide the position of the temple relative to the female connector so that the conductive sheet is in contact with the conductive pad.

16. A pair of glasses as recited in Claim 11, wherein
the pair of glasses includes a temple; and
the connector includes at least one conductive pad located on the top side of the temple to receive another connector that grabs onto the side of the temple.

17. A pair of glasses as recited in Claim 1, wherein the connector is a standard connector.

18. A pair of glasses as recited in Claim 17, wherein
the pair of glasses include a temple; and
the connector is a standard cylindrical plug at the end of the temple.

19. A pair of glasses as recited in Claim 18, wherein
the plug is a male plug; and
at least a portion of the plug is shrouded.

20. A pair of glasses as recited in Claim 18, wherein at least a portion of the connector is recessed within the temple.

21. A pair of glasses as recited in Claim 17, wherein
the pair of glasses include a temple; and
the connector is a USB connector at the end of the temple.

22. A pair of glasses as recited in Claim 17, wherein
the pair of glasses include a temple; and
the connector is on the side surface of the temple.

23. A pair of glasses as recited in Claim 22, wherein the connector is to receive a media card.

23A. A pair of glasses as recited in Claim 1, wherein
the pair of glasses includes a base and a cord, with the base tethered through the cord to the glasses; and
one or more electrical components are in the base.

23B. A pair of glasses as recited in Claim 1, wherein the pair of glasses is electrically connected to a portable electronic device through the connector.

23C. A pair of glasses as recited in Claim 23A, wherein the base is electrically connected to a portable electronic device through a cord.

23D. A pair of glasses as recited in Claim 23A further comprising an attachment device to attach at least a portion of the glasses to the user's clothing.

23E. A pair of glasses as recited in Claim 1 further comprising a microphone.

23F. A pair of glasses as recited in Claim 23E further comprising electrical components for wireless connection.

23G. A pair of glasses as recited in Claim 1 further comprising electrical components for wireless connection.

24. A pair of glasses for a user, comprising:

a storage medium at least partially embedded in the glasses;

an electrical connector at least partially embedded in the glasses; and

an electrical conductor electrically coupling the storage medium to the connector.

24A. A pair of glasses as recited in Claim 24, wherein

the pair of glasses includes a base and a cord, with the base tethered through the cord to the glasses; and

one or more electrical components are in the base.

24B. A pair of glasses as recited in Claim 24, wherein the pair of glasses is electrically connected to a portable electronic device through the connector.

24C. A pair of glasses as recited in Claim 24A, wherein the base is electrically connected to a portable electronic device through a cord.

24D. A pair of glasses as recited in Claim 24 further comprising electrical components for wireless connection.

25. A pair of glasses for a user, comprising:

a multimedia asset player, which includes

a speaker;

a coder/decoder;

a processor;

a storage medium; and

an electrical connector at least partially embedded in the glasses.

26. A pair of glasses as recited in claim 25, wherein the multimedia asset player is a MP3 player.

27. A pair of glasses as recited in claim 25, wherein the player plays music; and the electrical connector can be connected to a memory device that stores data related to music.

28. A pair of glasses as recited in claim 25, wherein

the pair of glasses includes a base and a cord, with the base tethered through the cord to the glasses; and

one or more electrical components are in the base.

28A. A pair of glasses as recited in Claim 25, wherein the pair of glasses is electrically connected to a portable electronic device through the connector.

28B. A pair of glasses as recited in Claim 28, wherein the base is electrically connected to a portable electronic device through a cord.

28C. A pair of glasses as recited in Claim 28 further comprising a microphone.

28D. A pair of glasses as recited in Claim 28 further comprising a notification electrical component configured to select a multimedia asset for the player to play.

28E. A pair of glasses as recited in Claim 28 further comprising electrical components for wireless connection.

29. A pair of glasses for a user, comprising:

a speaker embedded in the glasses; and

a knob configured to turn the speaker on and off;

wherein when the speaker is turned on, the speaker emits ultrasonic signals.

29A. A pair of glasses for a user as recited in Claim 29 further comprising a power source for the speaker.

29B. A pair of glasses as recited in Claim 29, wherein the ultrasonic signals are for repelling insects.

29C. A pair of glasses as recited in Claim 29, wherein the ultrasonic signals are for generating audio signals that are more directional.

30. A pair of glasses for a user, comprising:
a speaker at least partially embedded in the glasses;
a microphone at least partially embedded in the glasses;
electrical components for wireless connection; and
an electrical connector at least partially embedded in the glasses;
wherein the pair of glasses can be used as a wireless headset.

31. A pair of glasses for a user, comprising:
a multimedia asset player, which includes
a speaker;
a coder/decoder;
a processor; and
a storage medium.

32. A pair of glasses as recited in Claim 31 further comprising a wireless transceiver for receiving multimedia assets at the multimedia asset player.

33. A pair of glasses as recited in Claim 32 further comprising an electrical connector.

34. A pair of glasses for a user, comprising:
a speaker;
electrical components for wireless connection; and

a preference indicator that allows the user to indicate the user's preference regarding what is output by the speaker.

35. A pair of glasses as recited in claim 34,

wherein the user's preference can be wirelessly transmitted to a service provider; and

wherein the service provider can keep track of the user's preference.

36. A pair of glasses as recited in Claim 34, wherein the glasses further includes a radio, and the speaker outputs signals from the radio.

37. A pair of glasses as recited in Claim 34 further comprising:

a coder/decoder;

a processor; and

a storage medium,

wherein the pair of glasses can serve as a multimedia asset player,

wherein multimedia assets can be wirelessly received by the glasses, and

wherein the user's preference can determine the multimedia assets output by the speaker to be stored in the storage medium, which allows the user to subsequently access.

38. A pair of glasses as recited in Claim 37 wherein the multimedia assets being stored in the storage medium is categorized.

39. A pair of glasses for a user, comprising:

a camera; and

electrical components for wireless connection,

wherein the images taken by the camera can be wirelessly transmitted to an intermediate location, which re-transmits information related to the images to a second location for decision making

40. A pair of glasses as recited in Claim 39 further includes a speaker, and

wherein after a decision is made, a message is wirelessly transmitted to the user and presented to the user via the speaker.

41. A pair of glasses as recited in Claim 40 further comprising a microphone,

wherein signals from the microphone can be wirelessly transmitted to the intermediate location, which re-transmits information related to the signals to the second location, and

wherein the microphone allows the user to communicate with personnel in the second location.

42. A pair of glasses for a user, comprising:

a first lens holder for receiving lenses, the first lens holder having a first side and a second side;

a second lens holder for receiving lenses, the second lens holder having a first side and a second side;

a bridge element coupling the first side of the first lens holder to the second side of the second lens holder;

a first temple having a first end and a second end, with the first end pivotally secured to the second side of the first lens holder through a first joint;

a second temple pivotally secured to the first side of the second lens holder through a second joint;

a temple tip coupled to the second end of the first temple; and

an electrical component at least partially embedded in the temple tip.

43. A pair of glasses as recited in any of claims 1-42, wherein said pair of glasses further comprises at least one sensor.

44. An eyemask for a user comprising:

a piece of fabric, wherein when the mask is worn, the fabric wraps around the eyes of the user to block light from entering into the eyes of the user;

a wrapping mechanism, wherein when the mask is worn, the wrapping mechanism holds the fabric onto the head of the user, and allows the fabric to have a relatively tight and comfortable fit over the face of the user;

a speaker at least partially embedded in the fabric; and

an electrical connector that is connected to the speaker, wherein through the connector, audio signals can be brought to the speaker to be heard by the user.

45. A night cap for a user comprising:

a cap that is at least partially made of fabric;

a wrapping mechanism, wherein when the cap is worn, the wrapping mechanism holds the cap onto the head of the user, and allows the fabric to have a relatively tight and comfortable fit over the head of the user;

a speaker at least partially embedded in the cap, with the position of the speaker close to one of the ears of the user when the cap is worn; and

an electrical connector that is connected to the speaker, wherein through the connector, audio signals can be brought to the speaker to be heard by the user.

46. A replacement temple tip, temple cover and a fit-over temple having at one electrical component that is either attached thereto or at least partially embedded therein.

47. An eyeglasses frame having temples and lensholders, comprising:

at least one temple device coupled to at least one of the temples,

wherein said at least one temple device having at one electrical component that is either attached thereto or at least partially embedded therein.

48. An eyeglasses frame as recited in claim 47, wherein said temple device comprises a replacement temple tip, temple cover or a fit-over temple.

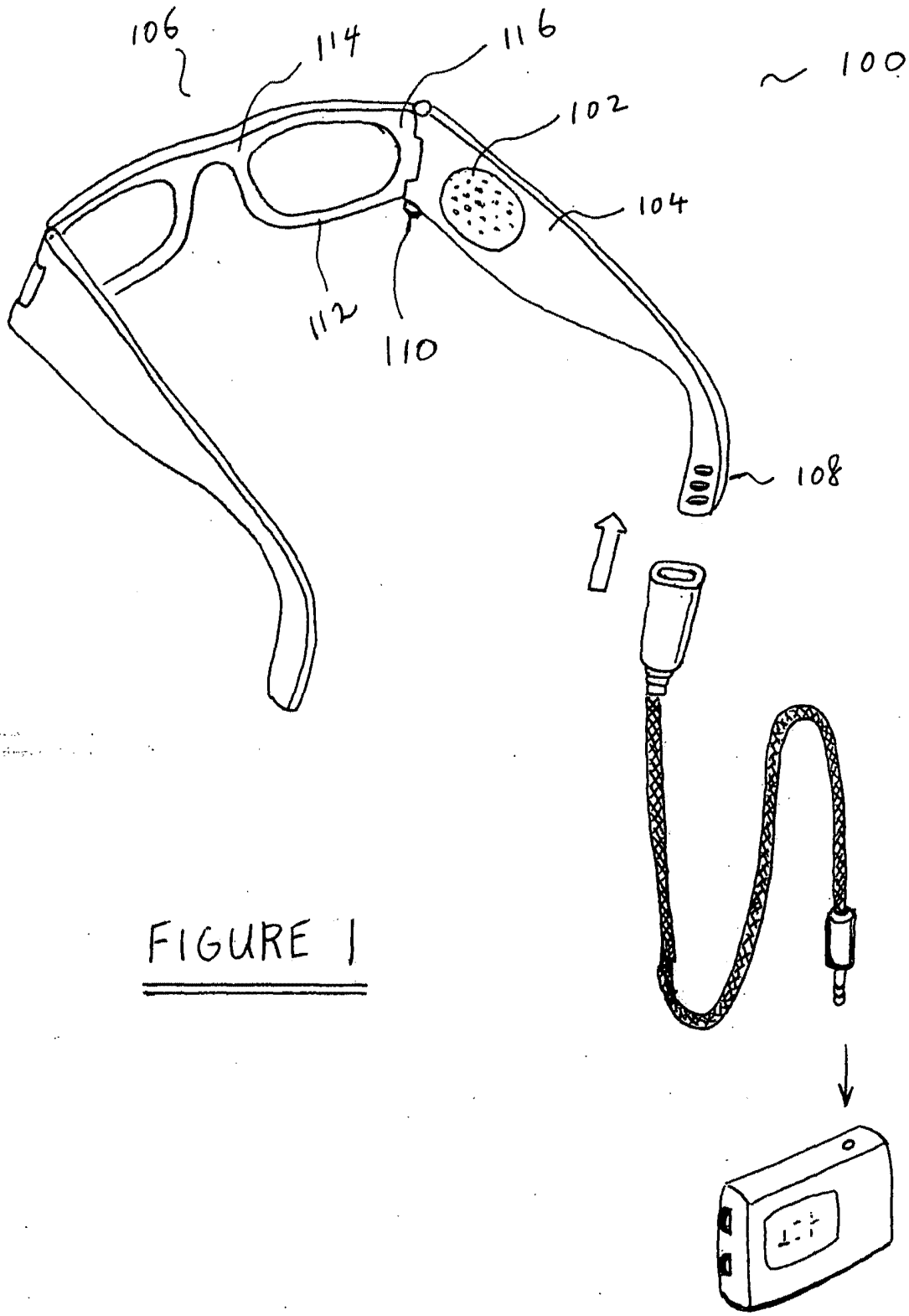


FIGURE 1

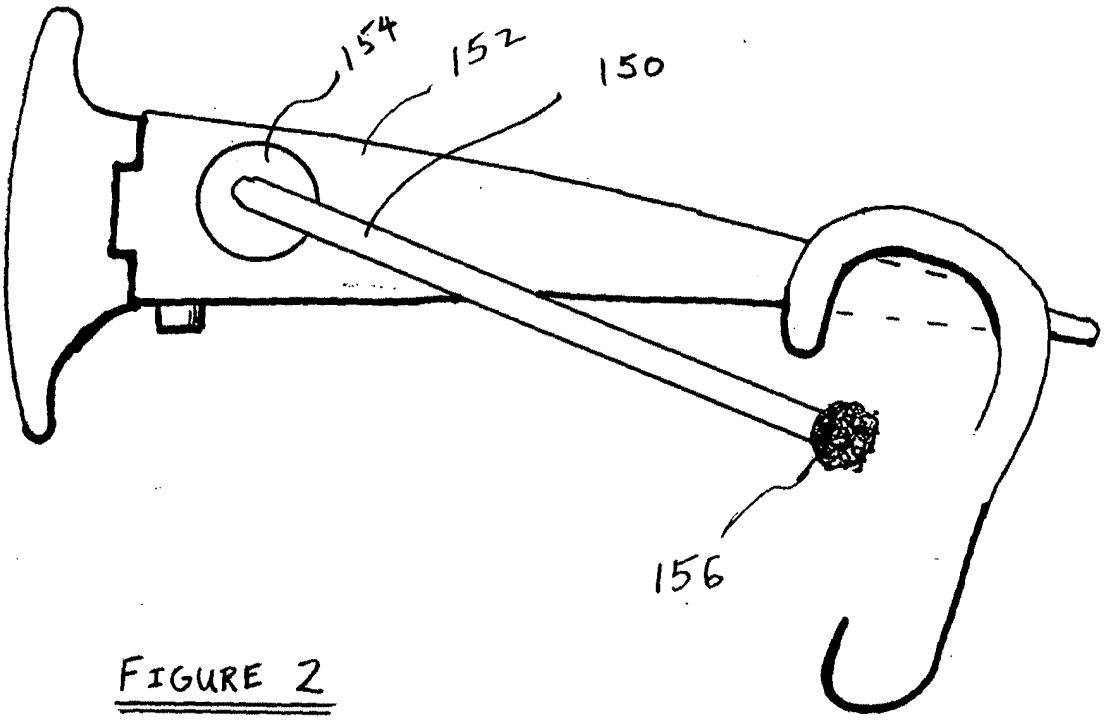


FIGURE 2

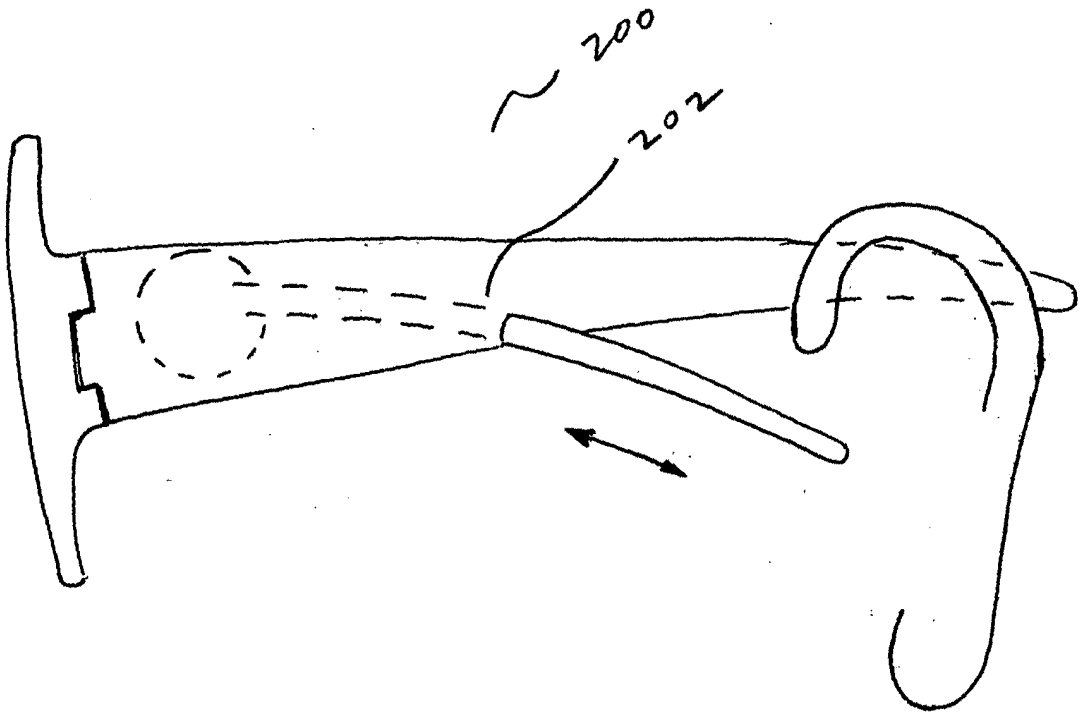


FIGURE 3

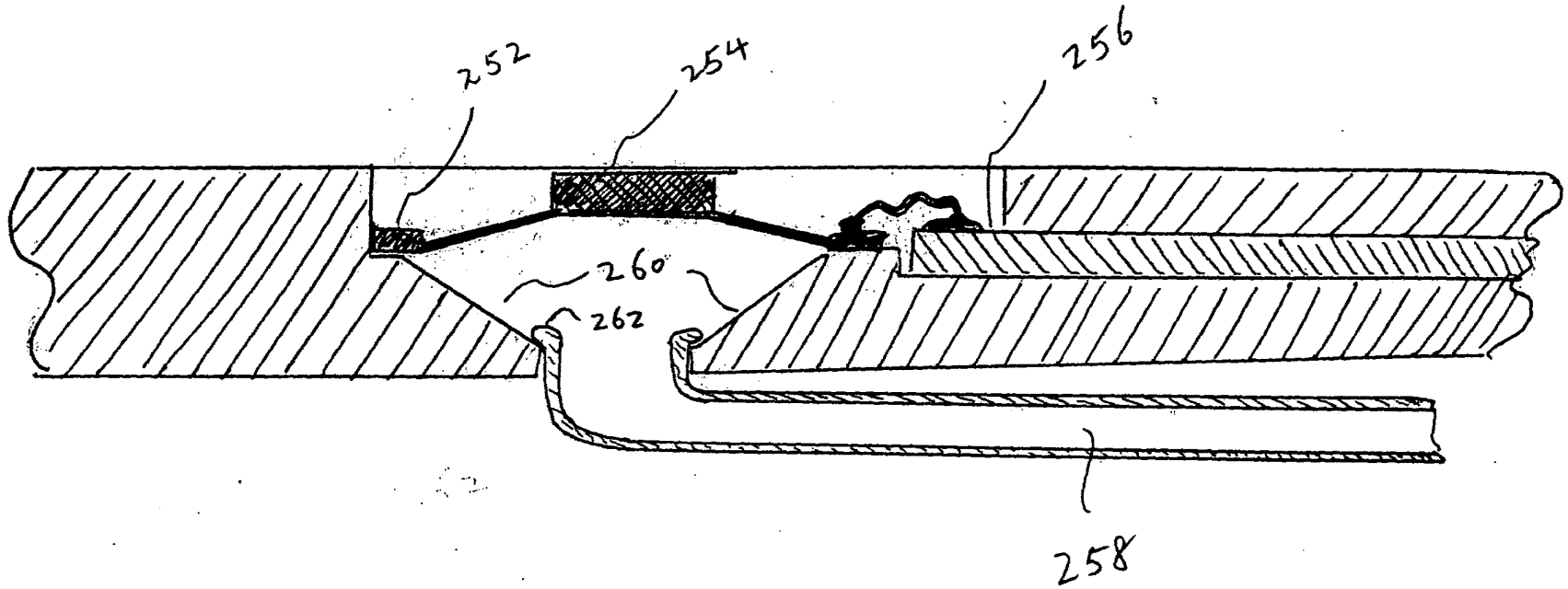


FIGURE 4

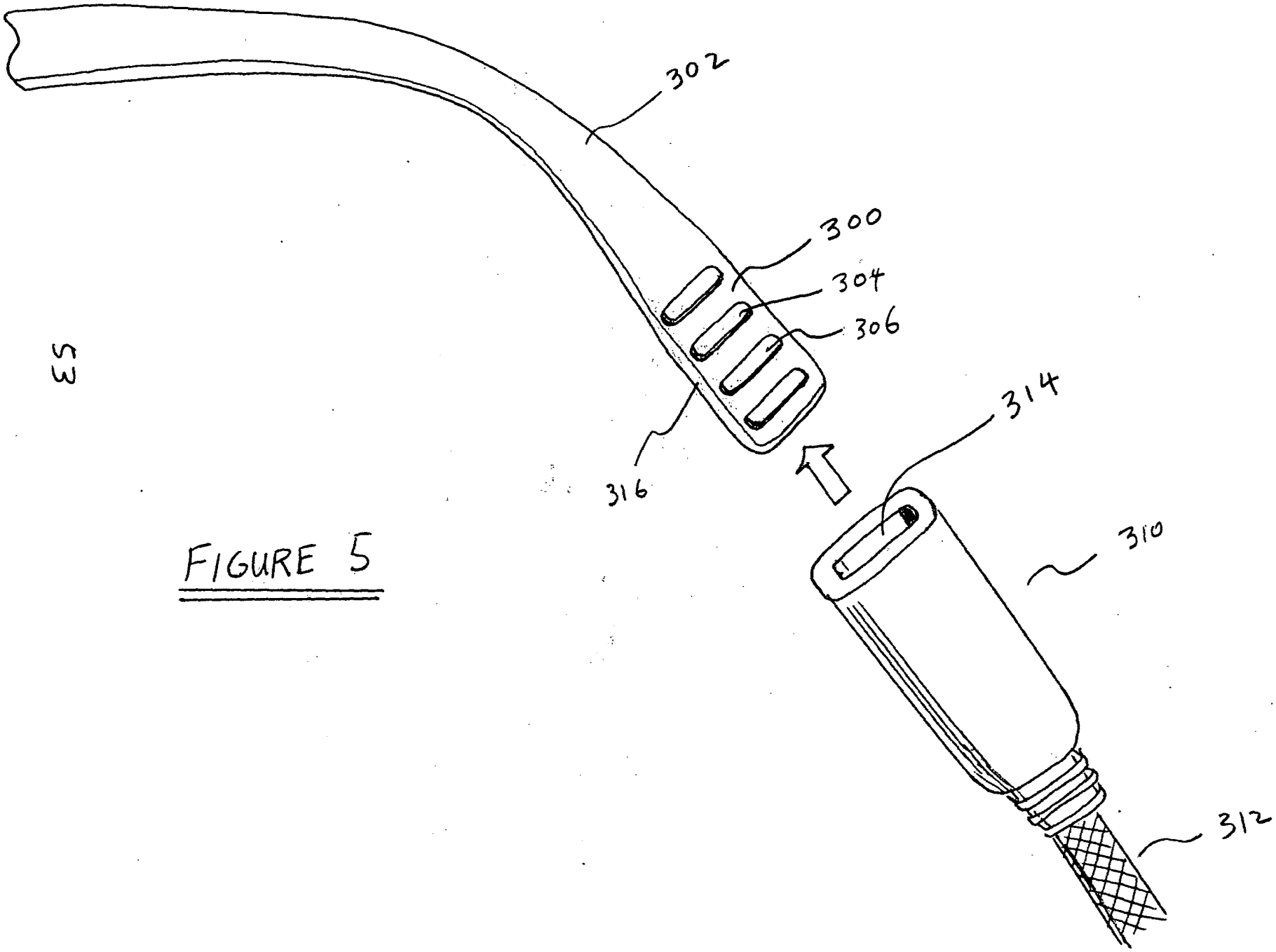


FIGURE 5

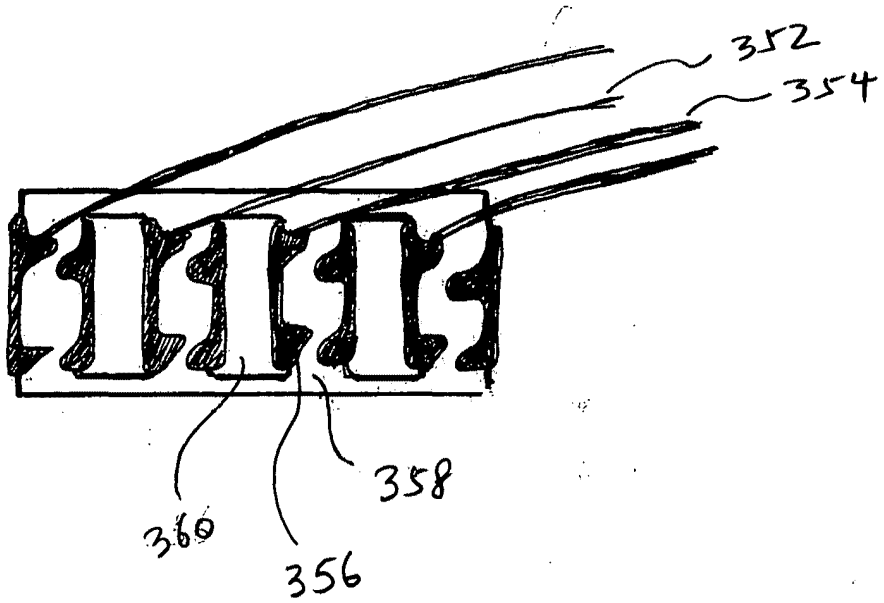


FIGURE 6A

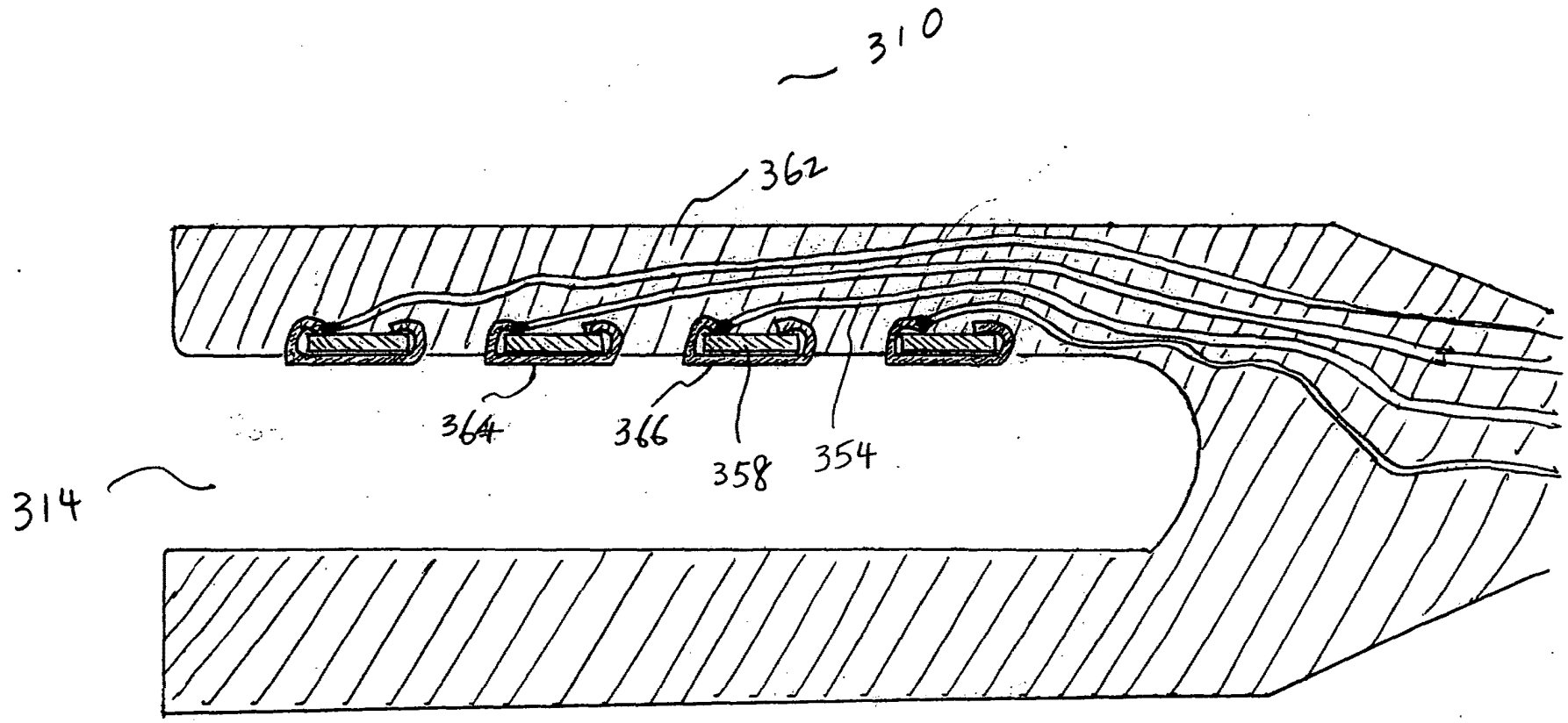


FIGURE 6B

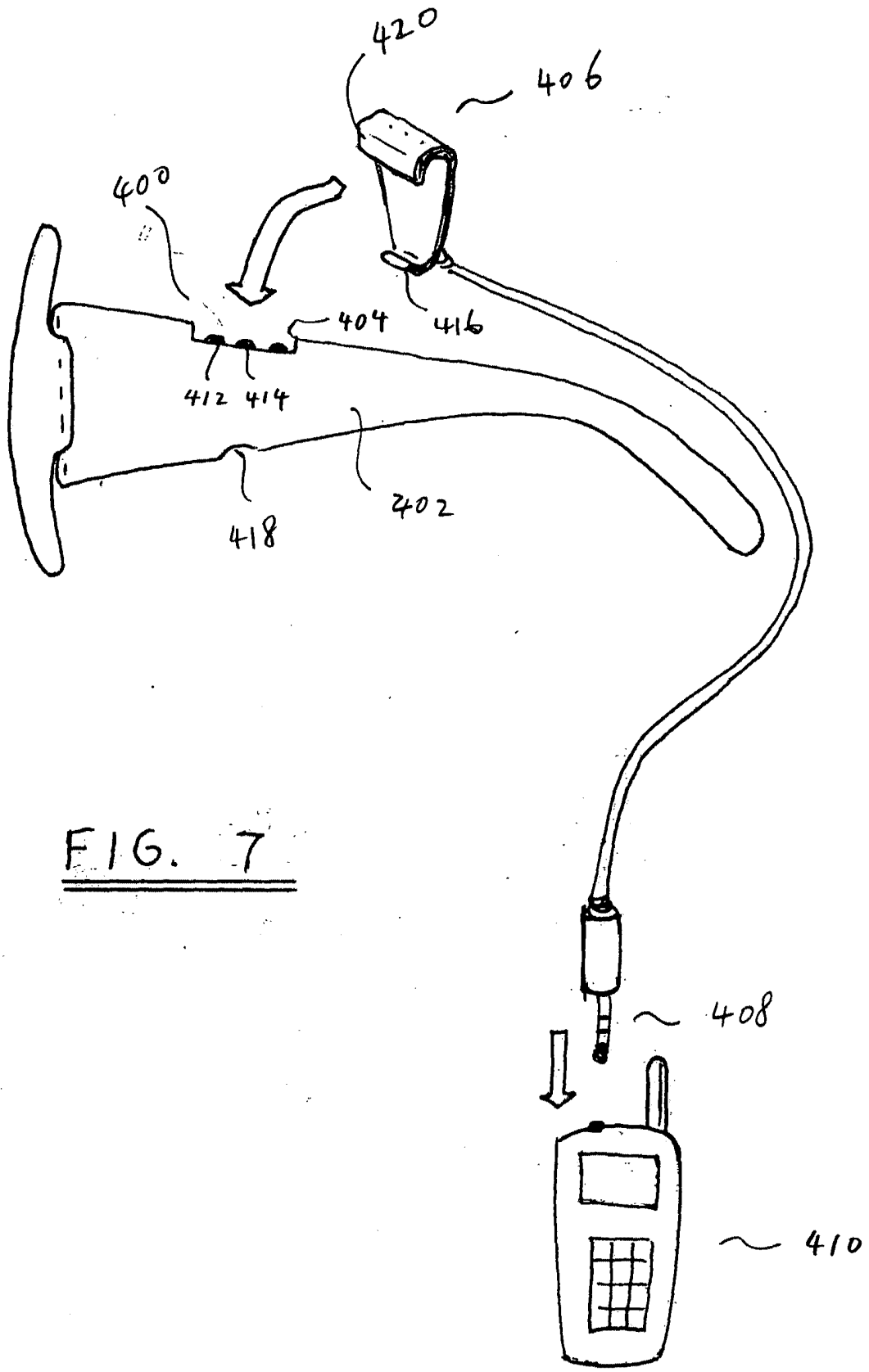


FIG. 7

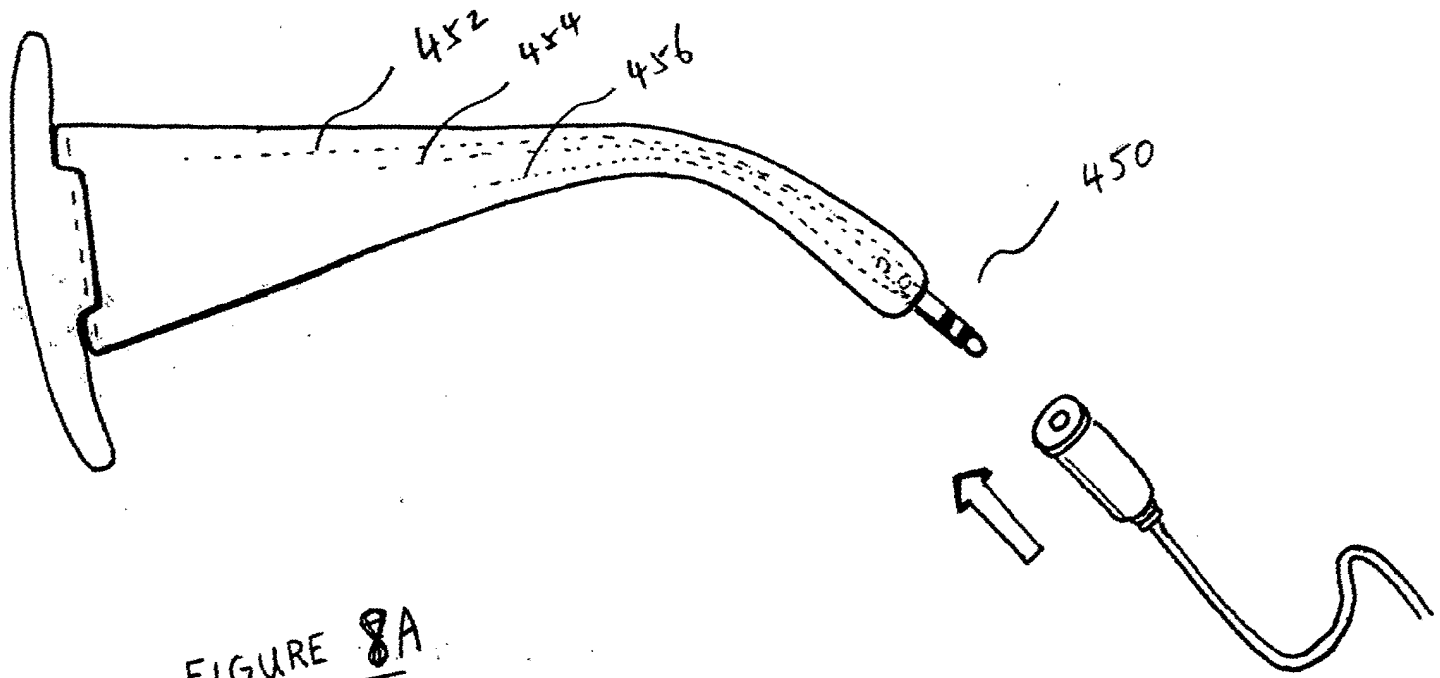


FIGURE 8A

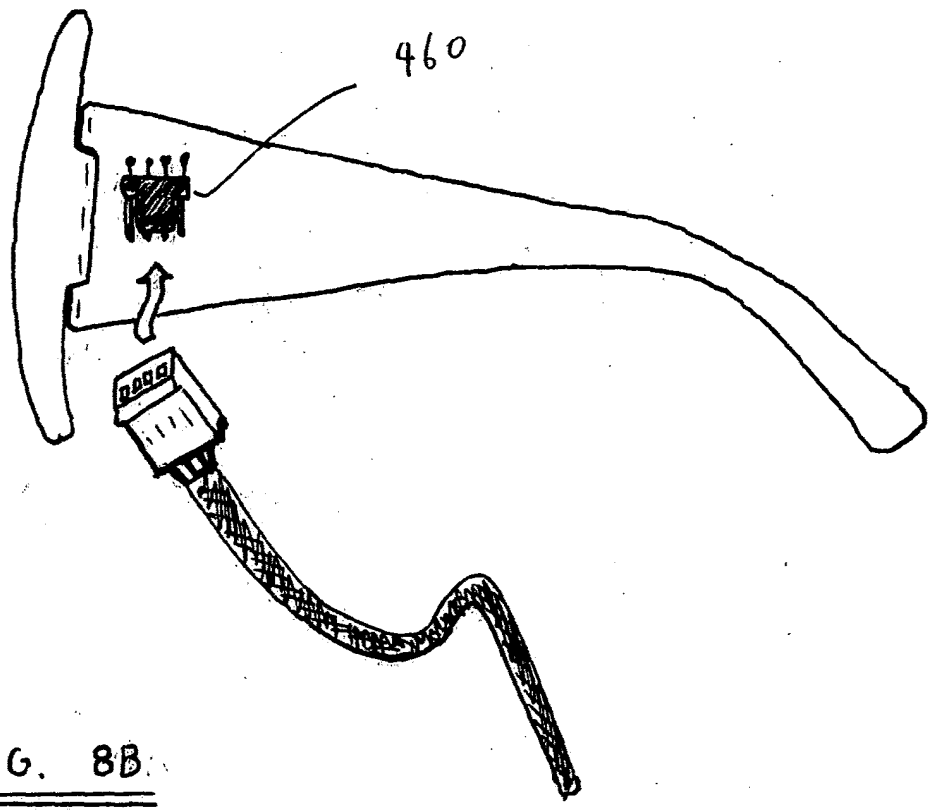


FIG. 8B

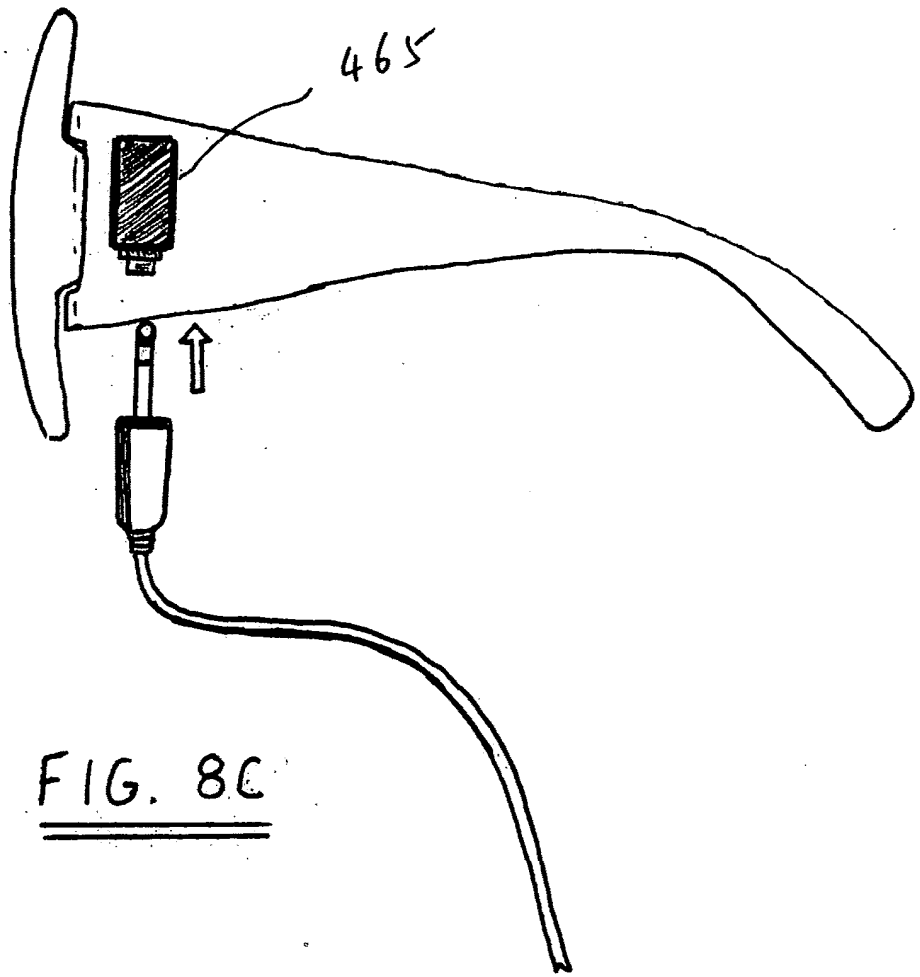


FIG. 8C

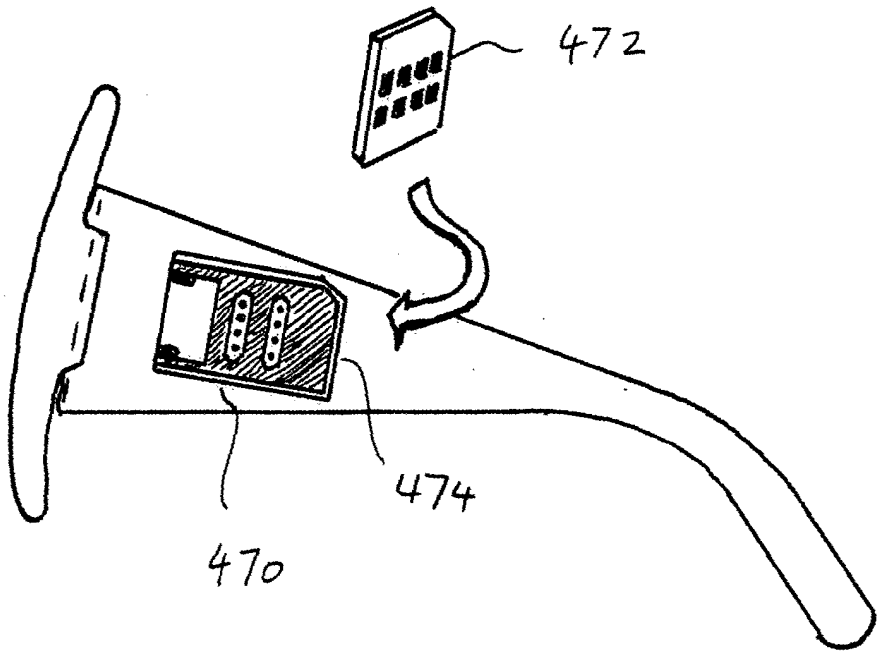


FIG. 8D

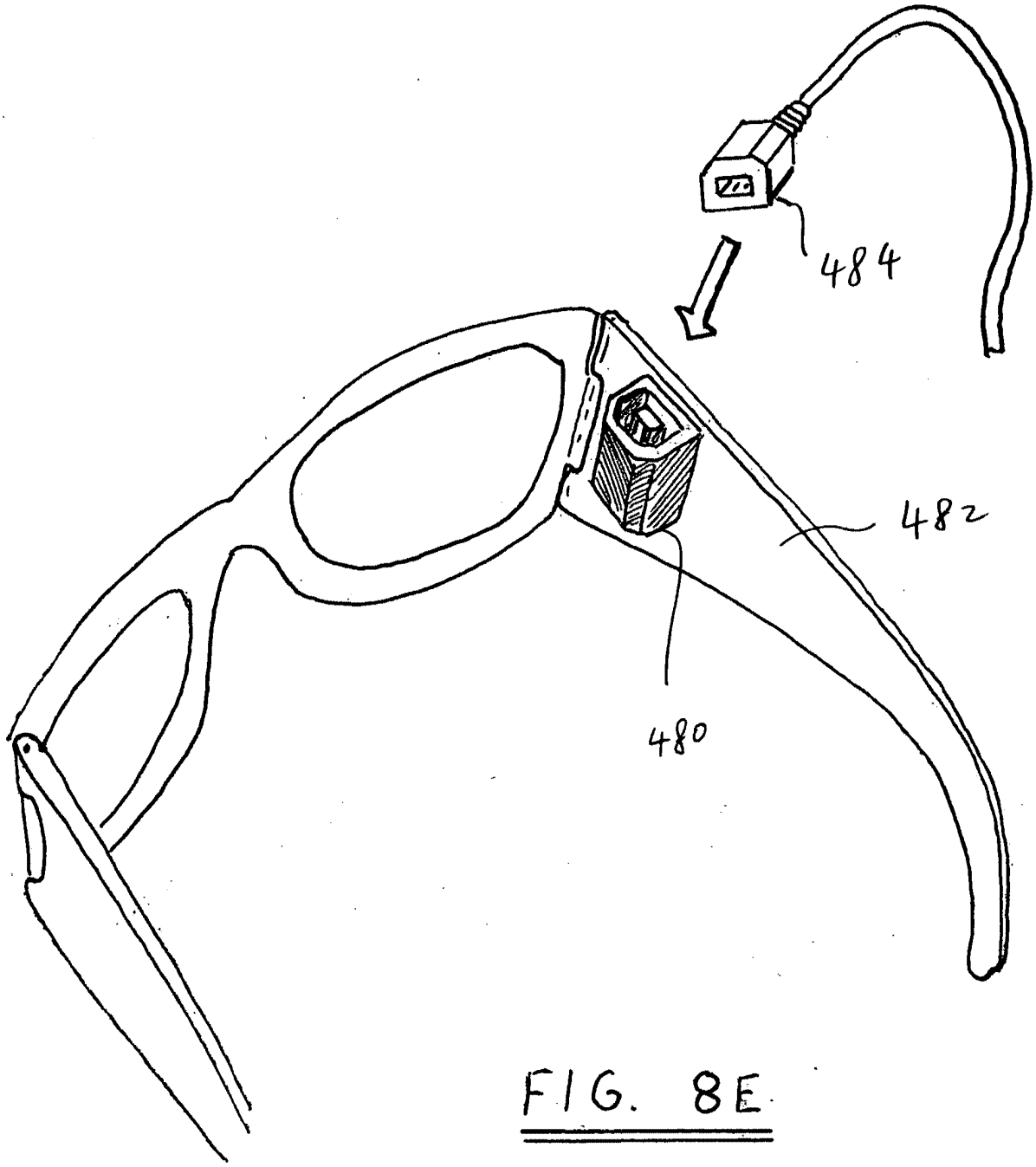


FIG. 8E

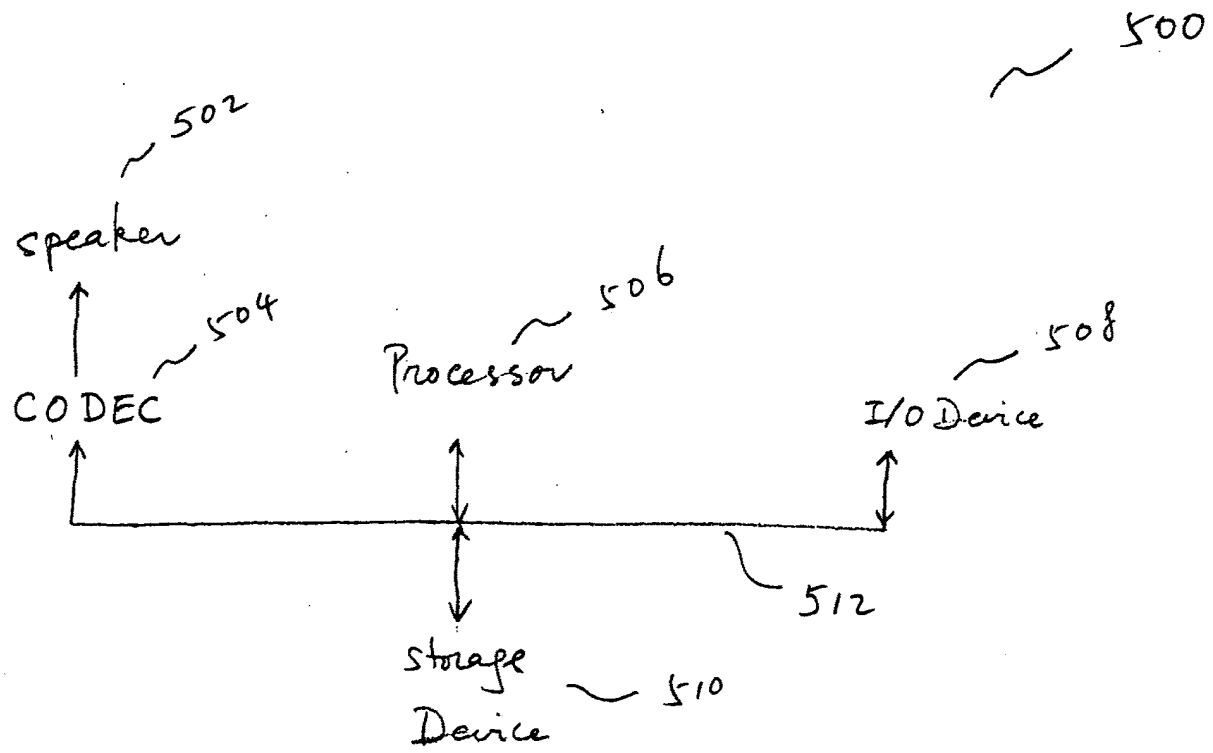
500
502
speaker
504
CODEC
506
Processor
508
I/O Device
512
storage
Device
510

Fig. 9

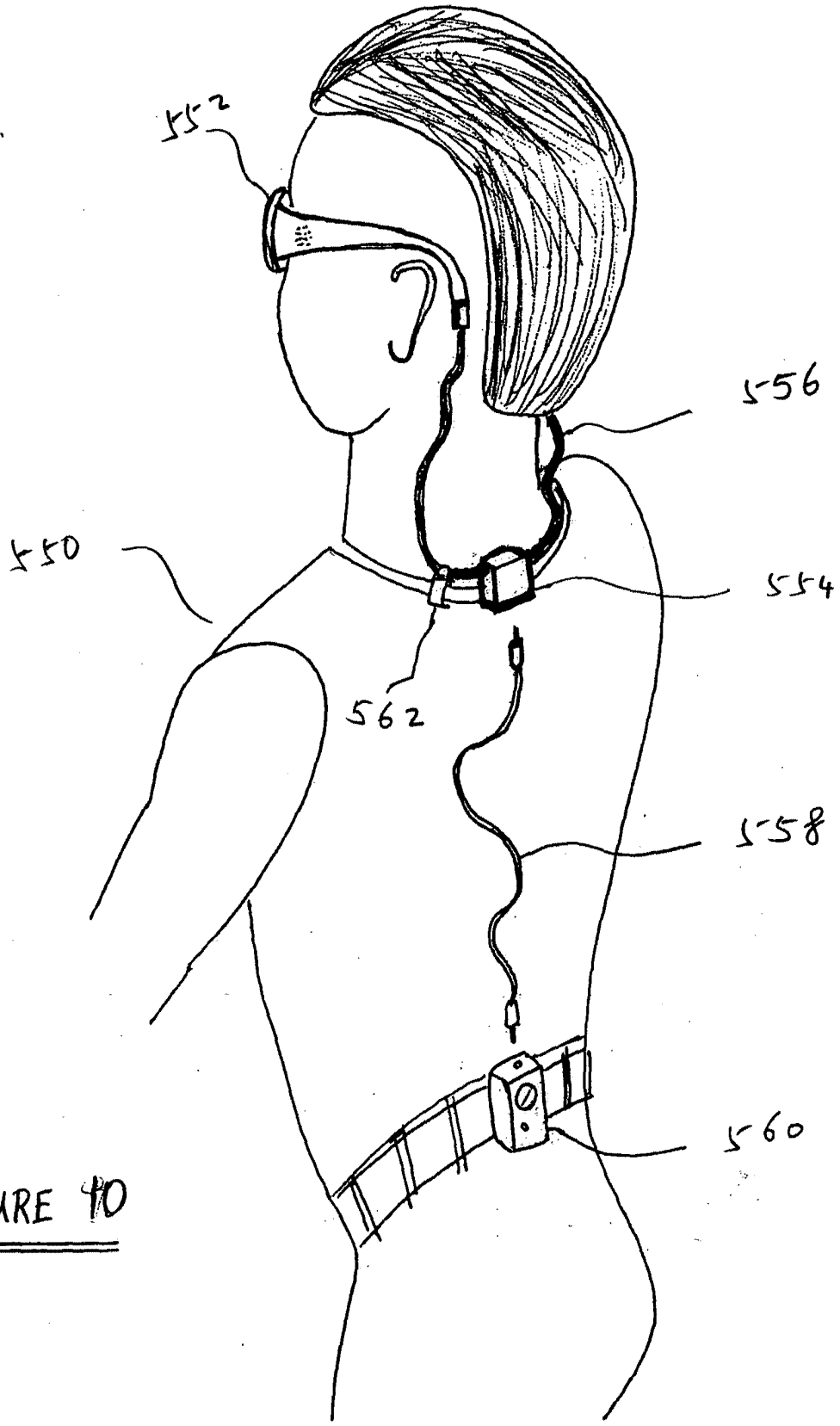


FIGURE 10

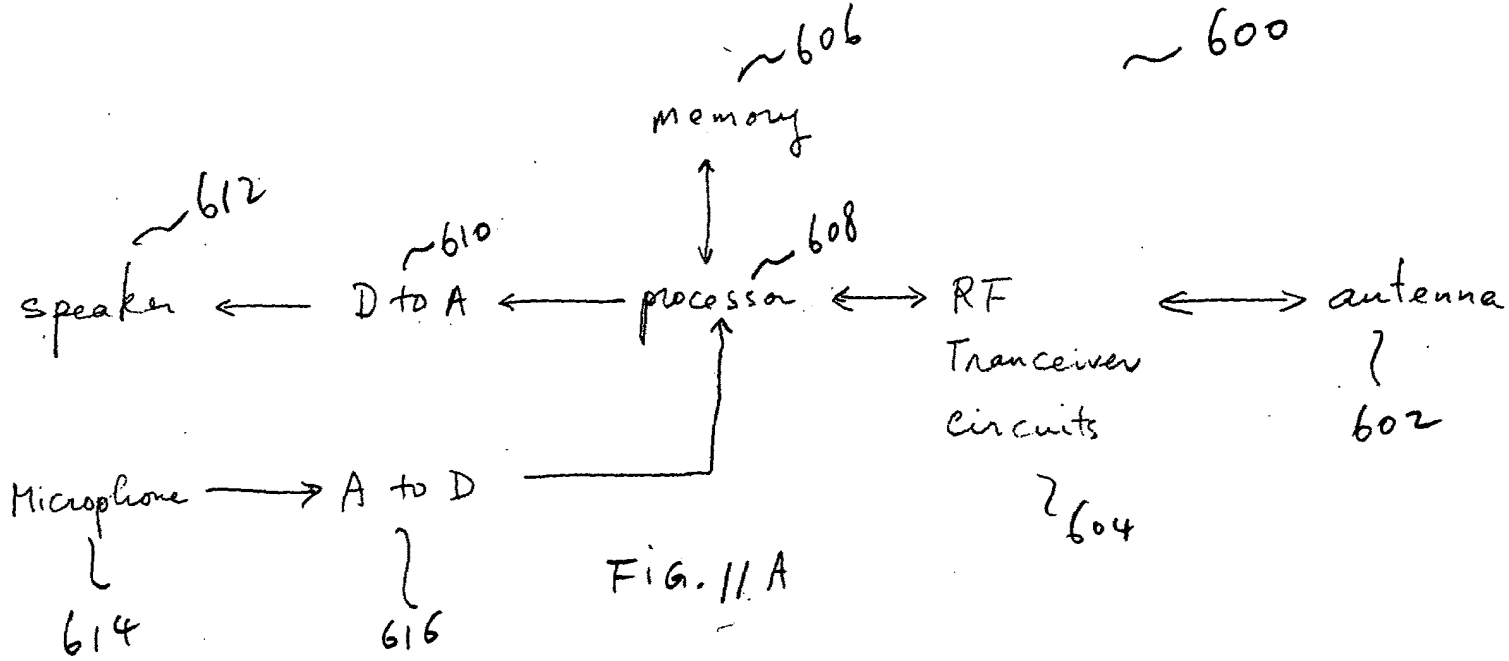


FIG. 11A

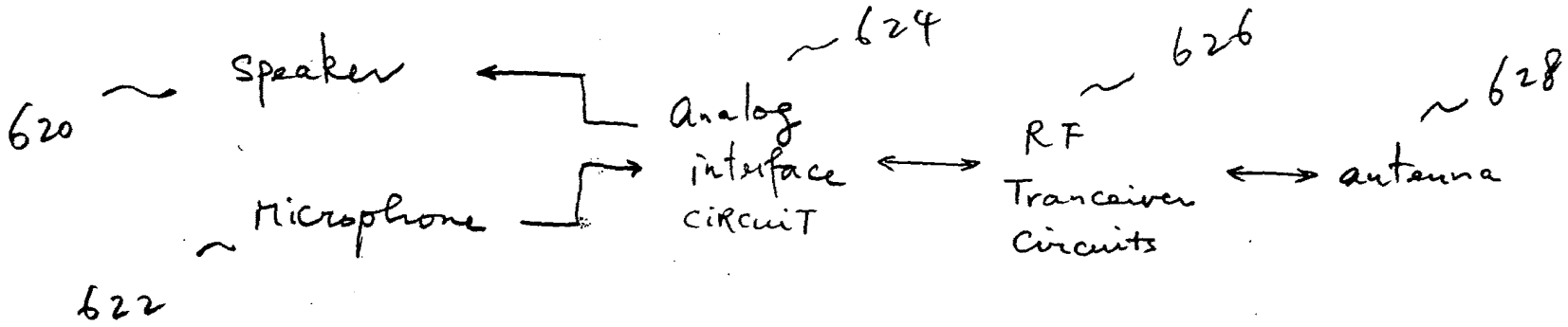


FIG. 11B

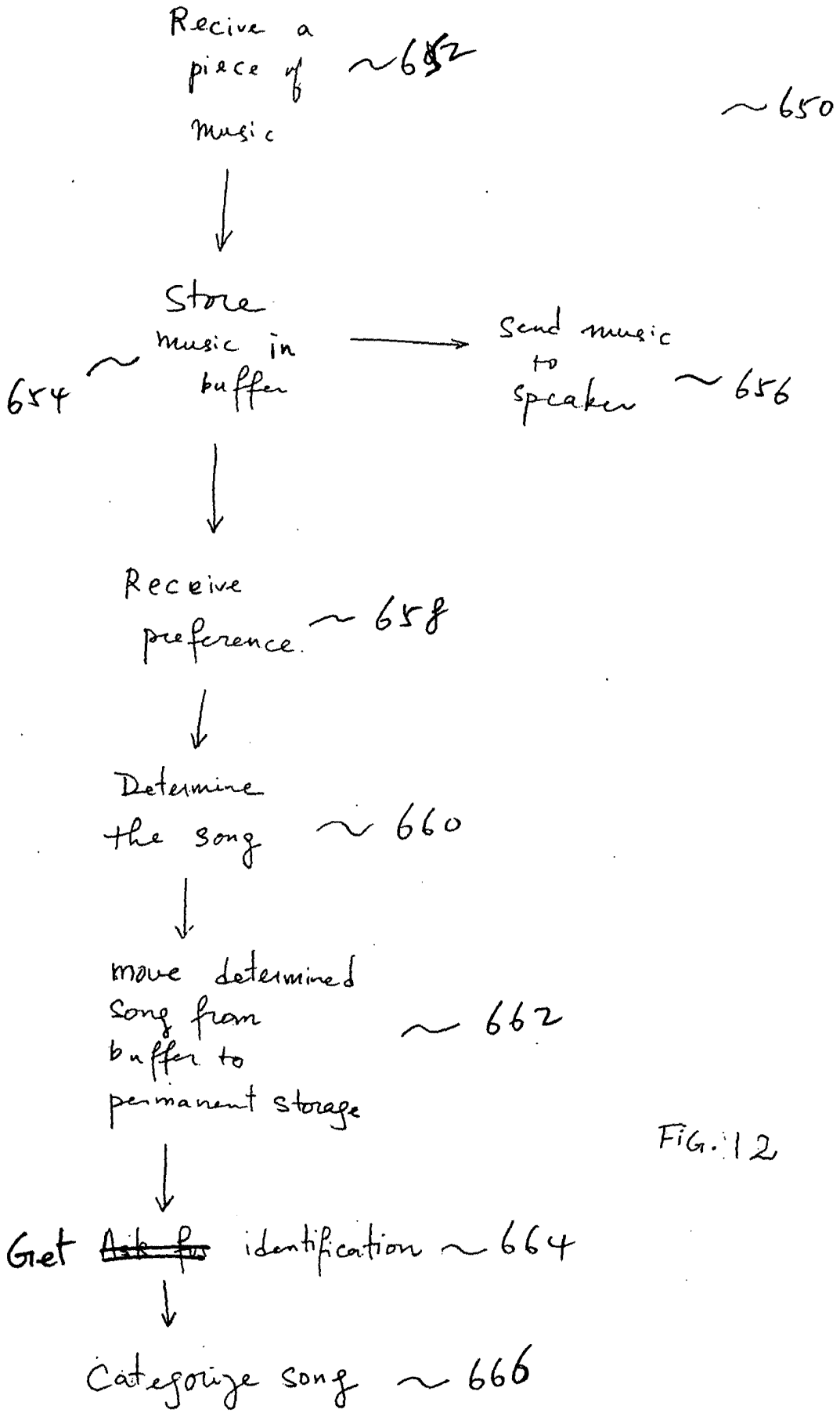
Recive a piece of music
652
650
Store music in buffer
654
Send music to speaker
656
Receive preference
658
Determine the song
660
move determined song from buffer to permanent storage
662
Get ~~Ask for~~ identification
664
Categorize song
666

FIG. 12

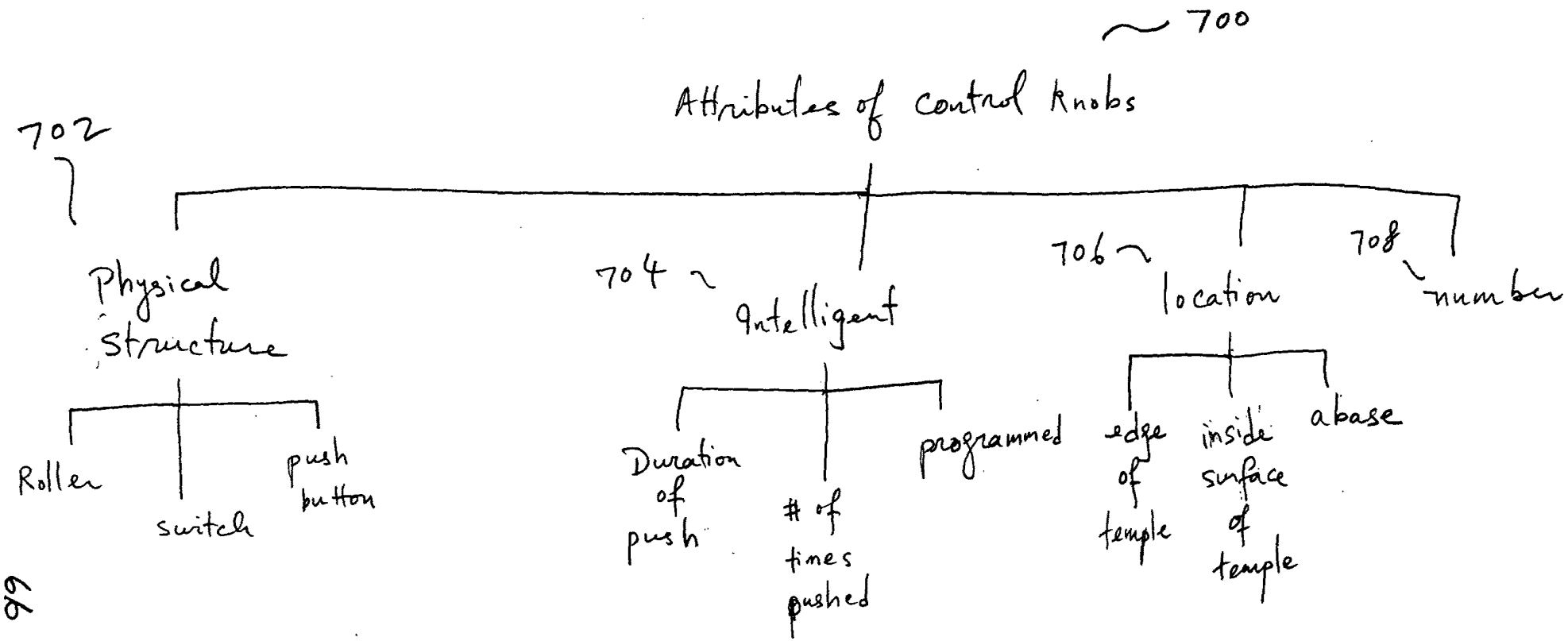
700
Attributes of control knobs
702
Physical structure
Roller
switch
push button
704
Intelligent
Duration of push
# of times pushed
programmed
706
location
edge of temple
inside surface of temple
abase
708
number

FIG. 13

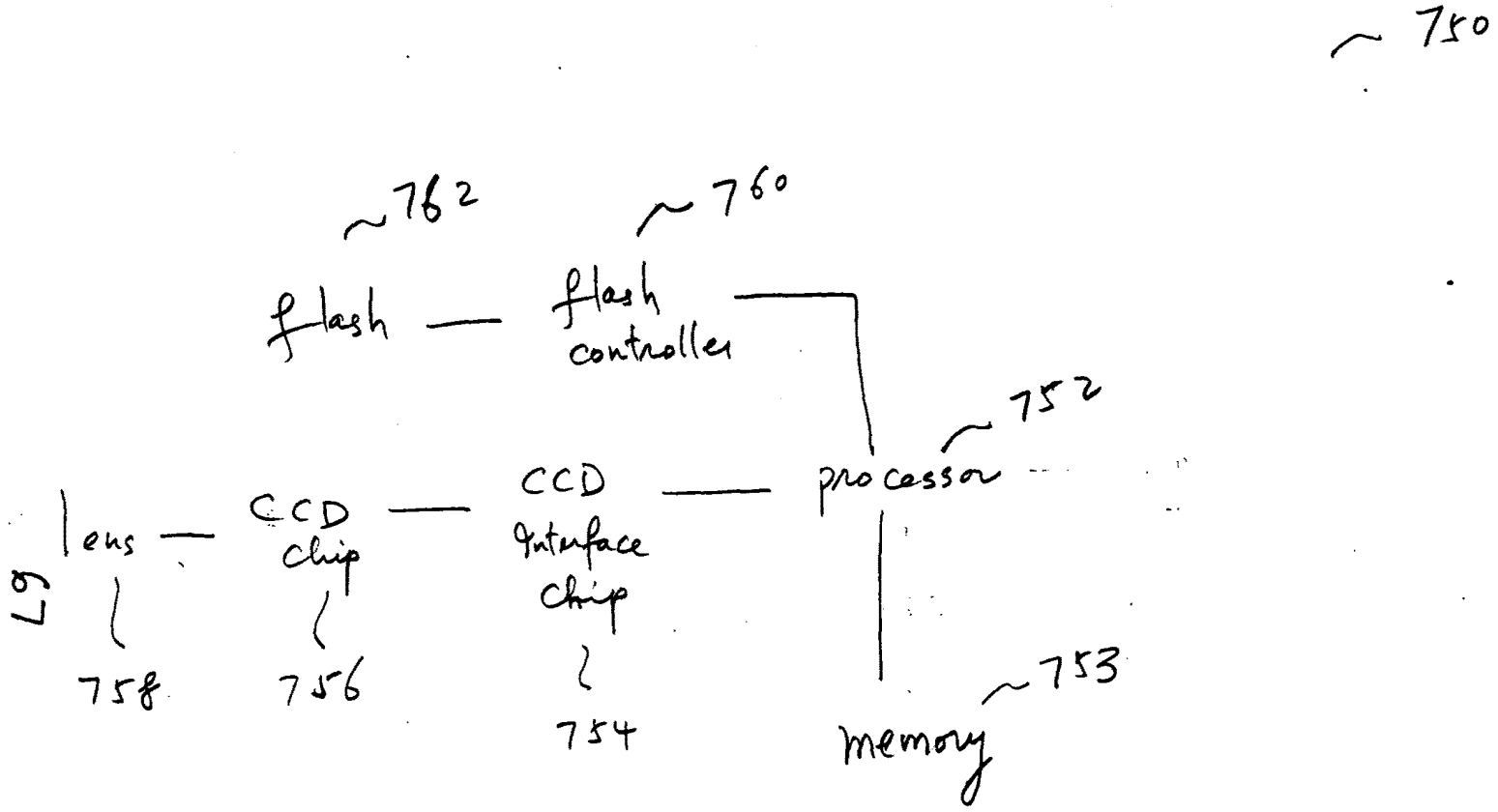
750
762
760
flash
flash controller
752
processor
lens
CCD chip
CCD Interface Chip
758
756
754
753
memory

FIG. 14

~800

Turn on camera ~802

Continually take pictures ~804

wirelessly transmit pictures to hub ~806

Re-transmits pictures to a station ~808

Action initiated based on the pictures ~810

FIG 15

~ 850

Continually take pictures ~ 852

↓

wirelessly transmit the pictures to a remote site ~ 854

↓

Receive voice messages from the remote site ~ 856

↓

Broadcast the messages to the user ~ 858

Fig. 16

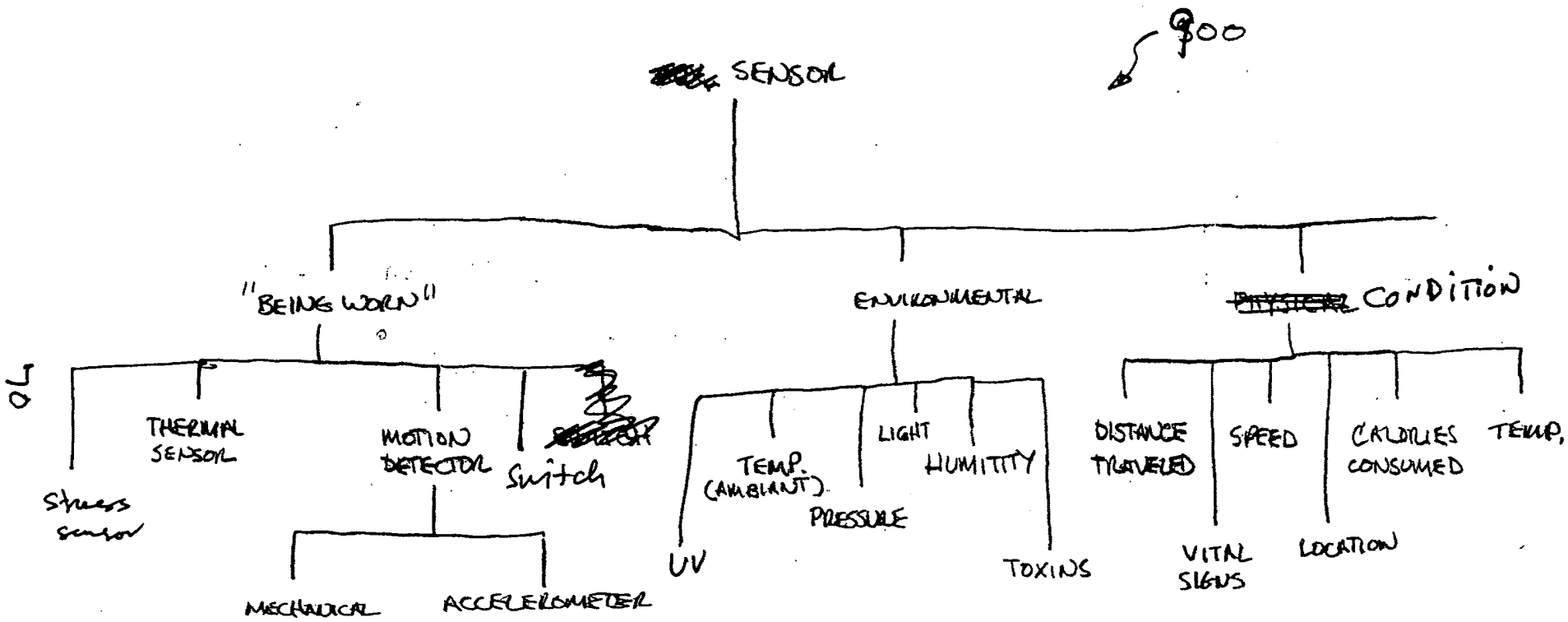
900
SENSOR
"BEING WORN"
ENVIRONMENTAL
CONDITION
910
THERMAL SENSOR
MOTION DETECTOR
Switch
Stress sensor
MECHANICAL
ACCELEROMETER
TEMP. (AMBIANT)
LIGHT
HUMITITY
PRESSURE
UV
TOXINS
DISTANCE TRAVELED
SPEED
CALORIES CONSUMED
TEMP.
VITAL SIGNS
LOCATION

FIG. 17A

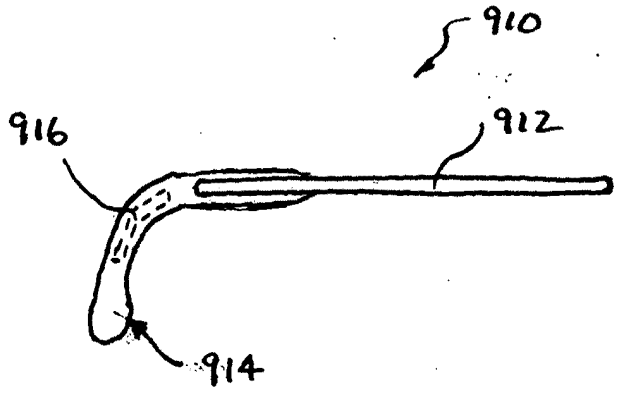


FIG. 17B

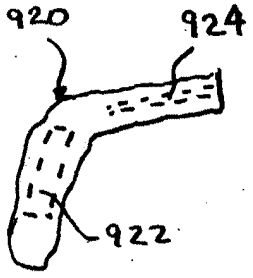


FIG. 17C

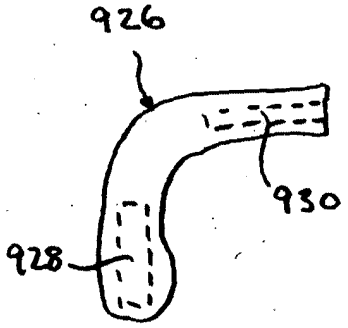


FIG. 17D

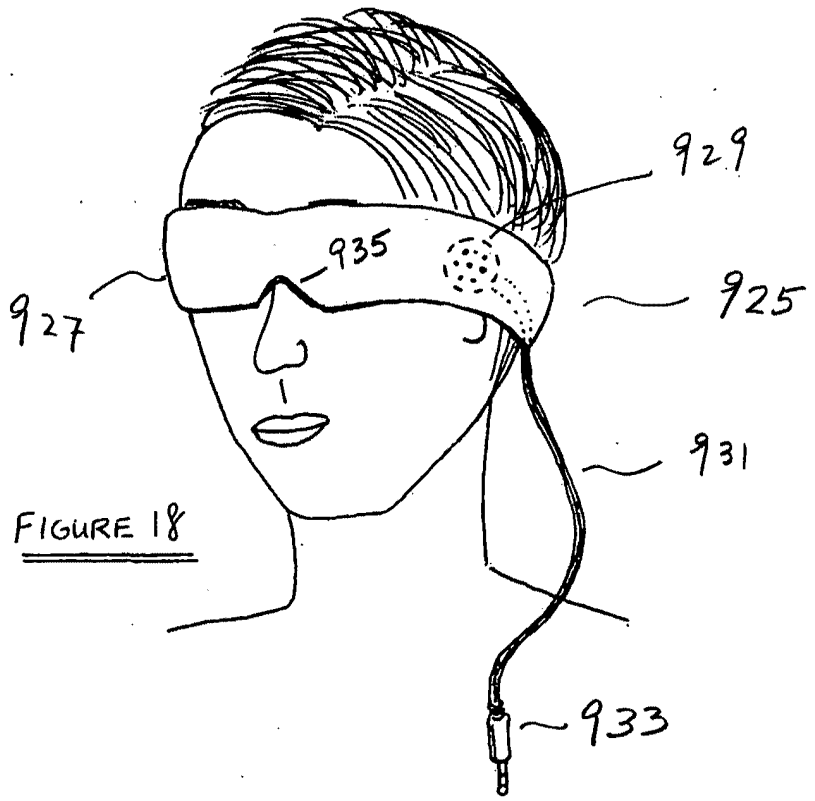


FIGURE 18

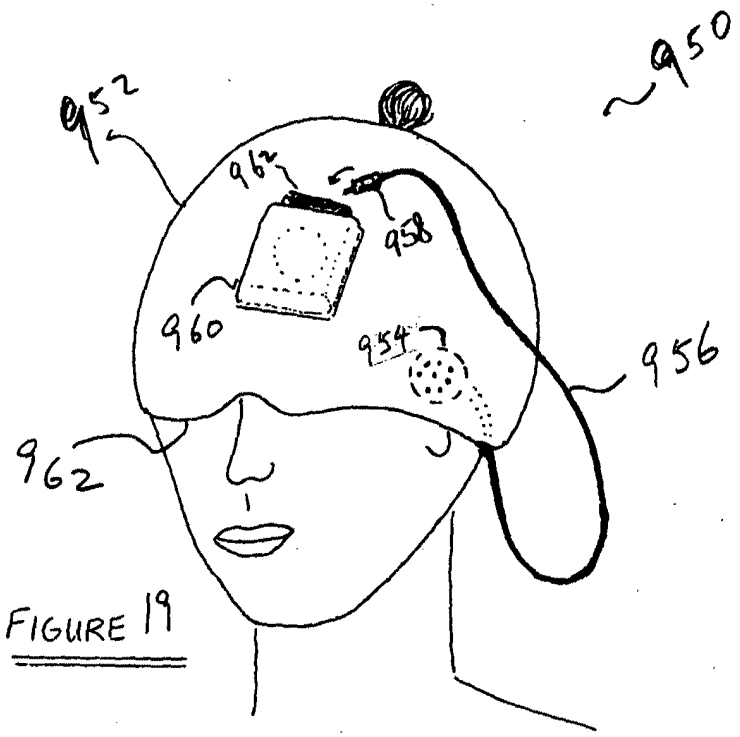


FIGURE 19

## B. EYEWEAR WITH ULTRAVIOLET DETECTION SYSTEM

SUMMARY OF THE INVENTION

**[0001]** In one embodiment, the invention pertains to eyewear having ultraviolet (UV) radiation monitoring capability. Ultraviolet radiation can be measured by a UV detector and radiation-related information can be provided to a user of the eyewear. Advantageously, the user of the eyewear is able to easily monitor their exposure to UV radiation.

**[0002]** In one embodiment, the eyewear includes a UV detector, electrical circuitry and an output device. The eyewear can also include one or both of a battery and a solar cell to provide power to the electrical circuitry and possibly other components. Further, the eyewear can also include one or more additional sensors. Still further, the eyewear can also include communication capabilities.

**[0003]** In one embodiment, all components for monitoring UV radiation can be integrated with the eyewear, such as the frame (e.g., a temple of frame) of the eyewear. Since any of the components provided can be integrated with the eyewear, the disturbance to design features of the eyewear can be reduced. As an example, the eyewear normally includes a pair of temples, and the components for monitoring UV radiation can be embedded within one or both of the temples. In one implementation, all components for monitoring UV radiation are integrated into a temple of the frame of the eyewear. As an example, these components can be formed together on a substrate so that they form a module.

**[0004]** In another embodiment, some or all of the components for monitoring UV radiation can be partially or completely tethered to the eyewear. In still another embodiment, some or all of one or more auxiliary sensors used therewith could be partially or completely tethered to the eyewear. Tethering components allows for

increased design freedom with the eyewear as well as additional area with which to house the components.

**[0005]** The eyewear can contain lenses, either vision corrective lenses or non-corrective lenses. Examples of eyewear using corrective lens include, for example, bi-focal glasses, reading glasses, driving glasses, and progressive glasses. Examples of eyewear using non-corrective lenses are sunglasses, fit-over glasses, safety glasses, swim masks and ski goggles.

**[0006]** The invention can be implemented in numerous ways, including as a system, device, apparatus, and method. Several embodiments of the invention are discussed below.

**[0007]** Other aspects and advantages of the invention will become apparent from the following detailed description taken in conjunction with the accompanying drawings which illustrate, by way of example, the principles of the invention.

## BRIEF DESCRIPTION OF THE DRAWINGS

**[0008]** The invention will be readily understood by the following detailed description in conjunction with the accompanying drawings, wherein like reference numerals designate like structural elements, and in which:

**[0009]** FIG. 1 is a perspective view of UV monitoring glasses according to one embodiment of the invention.

**[0010]** FIGs. 2A and 2B are diagrams of a circuit board according to one embodiment of the invention.

**[0011]** FIG. 3 is a block diagram of a UV monitoring system according to one embodiment of the invention.

**[0012]** FIG. 4A is a block diagram of a UV monitoring system according to another embodiment of the invention.

[0013] FIG. 4B is a block diagram of a UV monitoring system according to still another embodiment of the invention.

[0014] FIG. 4C is a block diagram of a UV monitoring system according to yet another embodiment of the invention.

[0015] FIG. 4D is a block diagram of a UV monitoring system according to yet another embodiment of the invention.

[0016] FIG. 5 is a chart that depicts examples of auxiliary sensors that can be utilized as the one or more auxiliary sensors shown in FIGs. 4A – 4D.

[0017] FIG. 6 is a block diagram of a UV monitoring system according to one embodiment of the invention.

[0018] FIG. 7A is a schematic diagram of a UV monitoring circuit according to one embodiment of the invention.

[0019] FIG. 7B is a schematic diagram of a UV monitoring circuit according to another embodiment of the invention.

[0020] FIG. 7C is a schematic diagram of a UV monitoring circuit according to yet another embodiment of the invention.

[0021] FIG. 7D is a schematic diagram of a UV monitoring circuit according to still yet another embodiment of the invention.

[0022] FIG. 8 is a flow diagram of a UV monitoring process according to one embodiment of the invention.

[0023] FIG. 9 is a flow diagram of a UV monitoring process according to another embodiment of the invention.

[0024] FIG. 10 is a flow diagram of a UV monitoring process according to yet another embodiment of the invention.

[0025] FIG. 11 is a flow diagram of a UV monitoring process according to still yet another embodiment of the invention.

**[0026]** FIG. 12 is a block diagram of electronic circuitry according to one embodiment of the invention.

**[0027]** FIG. 13 is a schematic diagram of an electronic circuit for a UV detection system according to one embodiment of the invention.

**[0028]** FIG. 14A is a schematic diagram of a periodic supply voltage circuit according to one embodiment of the invention.

**[0029]** FIG. 14B is a cross-sectional view of a UV detector arrangement according to one embodiment of the invention.

**[0030]** FIGs. 15A-15C are cross-sectional diagrams of a UV detection systems according to embodiments of the invention.

**[0031]** FIG. 16A is a cross-sectional view of an eyewear housing containing a UV detection system according to one embodiment of the invention.

**[0032]** FIG. 16B is a cross-sectional view of an eyewear housing containing a UV detection system according to another embodiment of the invention.

**[0033]** FIG. 16C is a cross-sectional view of an eyewear housing containing a UV detection system according to still another embodiment of the invention.

**[0034]** FIG. 17A is a cross-sectional view of a module housing according to one embodiment of the invention.

**[0035]** FIG. 17B is a cross-sectional view of an eyewear housing according to one embodiment of the invention.

**[0036]** FIG. 18 is a cross-sectional view of an eyewear housing having a reflective-type filter according to one embodiment of the invention.

**[0037]** FIG. 19 is a side view of a temple for an eyeglass frame according to one embodiment of the invention.

**[0038]** FIGs. 20A and 20B are top view diagrams of a portion of an eyeglass frame 2000 according to one embodiment of the invention.

[0039] FIG. 21 is a side view of a temple for an eyeglass frame according to one embodiment of the invention.

[0040] FIG. 22 is a side view of a temple for an eyeglass frame according to another embodiment of the invention.

## DETAILED DESCRIPTION OF THE INVENTION.

[0041] In one embodiment, the invention pertains to eyewear having ultraviolet (UV) radiation monitoring capability. Ultraviolet radiation can be measured by a UV detector and radiation-related information can be provided to a user of the eyewear. Advantageously, the user of the eyewear is able to easily monitor their exposure to UV radiation.

[0042] In one embodiment, the eyewear includes a UV detector, electrical circuitry and an output device. The eyewear can also include one or both of a battery and a solar cell to provide power to the electrical circuitry and possibly other components. Further, the eyewear can also include one or more additional sensors. Still further, the eyewear can also include communication capabilities.

[0043] In one embodiment, all components for monitoring UV radiation can be integrated with the eyewear, such as the frame (e.g., a temple of frame) of the eyewear. Since any of the components provided can be integrated with the eyewear, the disturbance to design features of the eyewear can be reduced. As an example, the eyewear normally includes a pair of temples, and the components for monitoring UV radiation can be embedded within one or both of the temples. In one implementation, all components for monitoring UV radiation are integrated into a temple of the frame of the eyewear. As an example, these components can be formed together on a substrate so that they form a module.

[0044] In another embodiment, some of the components for monitoring UV radiation can be tethered to the eyewear. Tethering components allow for increased

design freedom with the eyewear as well as additional area with which to house the components.

**[0045]** The eyewear can contain lenses, either vision corrective lenses or non-corrective lenses. Examples of eyewear using corrective lens include, for example, bi-focal glasses, reading glasses, driving glasses, and progressive glasses. Examples of eyewear using non-corrective lenses are sunglasses, fit-over glasses, safety-glasses, swim masks and ski goggles. In one embodiment, corrective lenses can be incorporated into at least some of the above-mentioned eyewear that typically uses non-corrective lenses.

**[0046]** Embodiments of the invention are discussed below with reference to FIGs. 1 – 22. However, those skilled in the art will readily appreciate that the detailed description given herein with respect to these figures is for explanatory purposes as the invention extends beyond these limited embodiments.

**[0047]** FIG. 1 is a perspective view of UV monitoring glasses 100 according to one embodiment of the invention. The UV monitoring glasses 100 include a frame and a pair of lenses 102. The frame has lens holders 104 that hold the lenses 102 in position. The frame also has a bridge 106. The UV monitoring glasses 100 also include a pair of temples (or arms) 108. The temples 108 are considered part of the frame. As shown in FIG. 1, each of the temples 108 is coupled to the frame by a hinge 109. In one embodiment, the temples 108 can be removed from the frame. At least one of the temples 108 includes an internal cavity 110. Within the internal cavity 110 is a circuit board 112. The circuit board 112 can serve as a substrate. The circuit board 112 can have or couple to a solar cell 114 and UV detector (e.g., photodetector) 116 which are also at least primarily provided within the internal cavity 110. The temple 108 having the cavity region 110 includes an opening 118 for the solar cell 114 and an opening 120 for the UV detector 116. In addition, the circuit board 112 can further include or couple to circuitry 122 and a display device 124. For example, the display device 124 can be either a liquid-crystal display (LCD) or a Light-Emitting Diode (LED) display having one or more LED components, either of which can be controlled by the

circuitry 122. The solar cell 114 can receive light via the opening 118 so as to provide power to the circuit board 112. The UV detector 116 can receive light via the opening 120. The UV detector 116 is used to provide an indication of UV radiation. The indication of UV radiation detected by the UV detector 116 can be processed by the circuitry 122 to produce an output at the display device 124.

**[0048]** FIGs. 2A and 2B are diagrams of the circuit board 112 according to one embodiment of the invention. In one embodiment, the circuit board includes at least one electronic component.

**[0049]** FIG. 2A shows a first side of the circuit board 112. Typically, the first side would be positioned adjacent a top side or outer side of the temple 108. As shown in FIG. 2A, the first side of the circuit board 112 has the solar cell 114 and the UV detector (e.g., photodetector) 116 attached thereto. The first side of the circuit board 112 should be exposed at least partially to external light (e.g., sunlight). Hence, the openings 118 and/or 120 of the temple 108 shown in FIG. 1 can provide openings so that light can impinge upon the solar cell 114 and the UV detector 116.

**[0050]** FIG. 2B shows a second side of the circuit board 112. The second side of the circuit board 112 can be a bottom side or inner side of the temple 108. As shown in FIG. 2B, the second side of the circuit board 112 can have the circuitry 122 and the display device 124 attached thereto. As previously noted, the display device 124 can be a LED or a LCD. As depicted in FIG. 2B, the display device 124 can be a multi-character display. Alternatively, the display device 124 can be a multi-color display, such as provided by a color LCD or a plurality of different color LEDs (e.g., a red LED, yellow LED and green LED).. Although not shown in FIG. 1, the UV monitoring glasses 100 can further include an opening or transparent portion at the temple 108 proximate to the display device 124 so that an output from the display device 124 can be visible to a user of the UV monitoring glasses 100.

**[0051]** FIG. 3 is a block diagram of a UV monitoring system 300 according to one embodiment of the invention. The UV monitoring system 300 can be embedded within

(i.e., internal to) the housing (i.e., frame) of a pair of glasses. Glasses refer to eyewear, such as prescription glasses, reading glasses, sunglasses, safety glasses, fit-over glasses, swim masks and ski goggles.

**[0052]** The UV monitoring system 300 includes electrical circuitry 302. The electrical circuitry 302 can be one or more electrical components, such as integrated circuits, analog components, and/or digital components. One or more solar cells 304 provide power to the electrical circuitry 302. In other words, when light impinges upon the one or more solar cells 304, power is produced and supplied to the electrical circuitry 302. The electrical circuitry 302 receives a UV level indication from a UV detector 306. In one embodiment, the UV detector 306 is a photodetector. An optical filter 308 can be positioned proximate to the UV detector 306 so that the optical filter 308 passes light associated with the ultraviolet wavelength range, and such light is supplied to the UV detector 306. As a result, the UV level indication produced by the UV detector 306 is an indication of the UV light impinging upon glasses or the user thereof. The electrical circuitry 302 receives the UV level indication from the UV detector 306 and determines whether an output should be signaled by an output device 310. The output device 310 can take a variety of different forms. For example, the output device 310 can be a display device, such as a LED or a LCD. A display device can produce a visual output. The output device 310 can also be a speaker or a vibration device. A speaker can produce an audio output. For example, the audio output can be a buzzing sound, a beep or a synthesized voice message.

**[0053]** FIG. 4A is a block diagram of a UV monitoring system 400 according to another embodiment of the invention. The UV monitoring system 400 includes the electrical circuitry 302, the one or more solar cells 304, the UV detector 306, the optical filter 308 and the output device 310 shown in FIG. 3. In addition, the UV monitoring system 400 further includes or makes use of one or more auxiliary sensors 402. The one or more auxiliary sensors 402 can provide additional sensor information to the electrical circuitry 302. This additional sensor information can affect the output being provided at the output device 310. For example, the additional sensor information

could be used to provide additional output data or could be used to modify the output data associated with the UV level indication provided by the UV detector 306.

**[0054]** FIG. 4B is a block diagram of a UV monitoring system 450 according to still another embodiment of the invention. The UV monitoring system 450 is generally similar to the UV monitoring system 400 shown in FIG. 4, but further includes or makes use of a "being worn" detector 452. The UV monitoring system 450 can be embedded within (i.e., internal to) the housing (i.e., frame) of a pair of glasses. The "being worn" detector 452 would indicate whether the glasses are being worn by its user. For example, the "being worn" detector 452 can be performed using a thermal sensor, a motion detector or a switch. Although the "being worn" detector 452 is shown separate from the auxiliary sensors 402, it should be understood that the "being worn" detector 452 can be considered one type of auxiliary sensor.

**[0055]** FIG. 4C is a block diagram of a UV monitoring system 460 according to yet another embodiment of the invention. The UV monitoring system 460 is generally similar to the UV monitoring system 400 shown in FIG. 4A, but further includes a second UV detector 462. In one embodiment, the second UV detector 462 is a photodetector. In addition, the first UV detector 306 is not, in this embodiment, itself a UV detector. Instead, the first UV detector 306 is a photodetector 306'. The UV monitoring system 460 can use the photodetector 306' and the second UV detector 462 to obtain the UV level indication. In one embodiment, the optical filter 308' blocks UV light and passes other light through to the photodetector 306'. As an example, the optical filter 308' can be a thin sheet or coating of polycarbonate. In this embodiment, the photodetector 306' provides an indication of non-UV light, and the photodetector 462 provides an indication of total light. The electrical circuitry 302' receives the indication of non-UV light and the indication of total light. By subtracting the indication of non-UV light from the indication of total light, the electrical circuitry 302' determines an indication of UV light. In this embodiment, the photodetectors 306' and 462 can be Silicon (Si) photodetectors. The electrical circuitry 302 determines whether an output

should be signaled by an output device 310 based on the UV level indication. As previously noted, the output device 310 can take a variety of different forms.

**[0056]** FIG. 4D is a block diagram of a UV monitoring system 470 according to still yet another embodiment of the invention. The UV monitoring system 470 includes the electrical circuitry 302, the one or more solar cells 304, the UV detector 306 and the output device 310 shown in FIG. 3. In this embodiment, the UV detector 306 measures the UV level indication directly, without the need for the optical filter 308. For example, the UV detector 306 can be a Gallium Nitride (GaN) photodetector which can be used as a UV detector given its sensitivity to UV radiation. The electrical circuitry 302 receives the UV level indication from the UV detector 306 and determines whether an output should be signaled by the output device 310. As noted above, the output device 310 can take a variety of different forms.

**[0057]** The one or more auxiliary sensors 402 utilized in the UV monitoring system 400 shown in FIGs. 4A – 4D can vary depending upon application. FIG. 5 is a chart 500 that depicts examples of auxiliary sensors that can be utilized as the one or more auxiliary sensors 402 shown in FIGs. 4A and 4D. The chart 500 indicates that one type of auxiliary sensor is a "being worn" sensor.

**[0058]** The "being worn" sensor would indicate whether the glasses are being worn by its user. The "being worn" sensor can be performed using, for example, a thermal sensor, a motion detector, a stress sensor, or a switch.

**[0059]** In one embodiment, a motion detector is used as a "being worn" sensor. A threshold can be set, such that if the amount of motion detector exceeds the threshold, the eyewear is assumed to be worn. The motion detector can, for example, be achieved by a mechanical means or an accelerometer.

**[0060]** In another embodiment, the "being worn" sensor includes one or more thermal sensors. In the case of two sensors, one sensor can be at approximately the middle of a temple, such as in a region that touches the head of the user wearing the glasses, and the other sensor can be positioned at the end close to the hinge of the

same temple. If the temperature differential between the two sensors is beyond a certain preset value, the eyewear would be assumed to be worn.

**[0061]** In yet another embodiment, the "being worn" sensor includes a stress sensor at the hinge of the temple. The assumption is that when the eyewear is worn, the hinge is typically slightly stretched because typically the width of the head of the user is slightly wider than the width between the temples when the two temples are in the extended positions. If the value of the stress sensor is beyond a certain preset value, the glasses would be assumed to be worn.

**[0062]** In still yet another embodiment, the "being worn" sensor can be implemented as a switch. For example, the switch can utilize optical, magnetic or mechanical means. In one embodiment, the switch can be positioned at the temple of the eyewear, such as a forward end of the temple proximate to a corresponding lens holder.

**[0063]** Another type of auxiliary sensor is an environmental sensor. The environmental sensor can sense environmental conditions, such as one or more of temperature (e.g., ambient temperature), pressure, light, humidity and toxins (e.g., chemicals, radiation, etc.). Still another type of sensor is a physical sensor. The physical sensor can sense physical conditions of the user of the glasses. Examples of physical sensors include sensing one or more of distance traveled, location, speed, calories consumed, temperature and vital signs associated with the user of the glasses. The distance traveled could represent the horizontal distance traveled or the vertical distance (i.e. elevation) traveled. As one example, a pedometer can provide an estimate of distance traveled The speed can be rate of movement along the horizontal distance traveled and/or the vertical distance. Still other physical sensors can sense emotions of the user. For example, the physical sensor could attempt to sense whether the user is calm, excited, happy, sad, angry, etc. The physical sensor can also more generally sense (e.g., estimate or predict) user activity level. As an example, the user activity level can be used to determine a lifestyle indication. For example, a lifestyle indication might indicate that the user was active today or, alternatively, lazy today.

Such a lifestyle indication can be displayed as a text or graphic symbol to make to user or others aware of their activity level.

**[0064]** The auxiliary sensors can be provided in a redundant or fault-tolerant manner. For example, sensors can be provided in pairs. When one sensor of a pair malfunctions, the other one can replace it. In another embodiment, any of the auxiliary sensor information can be processed in a differential manner to examine changes to the auxiliary sensor information. The auxiliary sensors can by powered by a battery, solar energy, or kinetic energy. For reduced power consumption, the auxiliary sensors can remain in a low-power state unless data is being acquired by the auxiliary sensors. In yet another embodiment, two or more of the auxiliary sensors can communicate with one another (wired or wirelessly) to exchange data or control information.

**[0065]** In general, the auxiliary sensors can be fully or partially embedded in the eyewear or a base tethered to the eyewear. Alternatively, one or more of the auxiliary sensors can be separate from the eyewear, or any base tethered thereto, and wirelessly communicate with the eyewear or base.

**[0066]** FIG. 6 is a block diagram of a UV monitoring system 600 according to one embodiment of the invention. The UV monitoring system 600 is generally similar to the UV monitoring systems illustrated in FIGs. 3 – 4D. However, in the UV monitoring system 600, a battery 602 provides power to the electrical circuitry 302. In other words, in this embodiment, the one or more solar cells 304 are optional. The UV monitoring system 600 can operate without the need for any light to impinge upon the one or more solar cells 304. If the UV monitoring system 600 does include the one or more solar cells 304, the power produced by the one or more solar cells 304 can be coupled to the battery 602 so as to recharge the battery. The battery 602 also allows the electrical circuitry 302 to maintain data even while no light is present (e.g., if a volatile memory is used to store data). The ability to maintain data (such as in a memory device) can be advantageous. For example, the UV monitoring system 600 may desire to output information associated with longer durations of time, or may desire to process data in a differential manner.

**[0067]** FIG. 7A is a schematic diagram of a UV monitoring circuit 700 according to one embodiment of the invention. The UV monitoring circuit 700 includes a phototransistor 702. Although the phototransistor 702 may itself serve as a UV detector, in some implementations, an optical filter (not shown) would limit the radiation that impinges on the phototransistor 702 in which case the phototransistor 702 together with the optical filter serves as the UV detector. A collector terminal of the phototransistor 702 is coupled to a power source Vcc. The power source Vcc can be a battery or solar cell(s). An emitter terminal of the phototransistor 702 is coupled to a first end of a resistor 704, a first end of a capacitor 706 and a gate terminal of a transistor 708. As an example, the transistor 708 can be an n-channel metal-oxide-semiconductor, enhancement-mode, field-effect transistor (MOSFET). A second end of the resistor 704, a second end of a capacitor 706 and a source terminal of the transistor 708 are coupled to ground. An output device 710 couples between the power source Vcc and a drain terminal of the transistor 708. As sufficient light, namely, UV radiation impinges on the phototransistor 702, the phototransistor 702 conducts so that the voltage V1 couples to the power source Vcc through the phototransistor 702. The voltage V1 is dependent on the amount of UV radiation that impinges on the phototransistor 702. The capacitor 706 then charges up in accordance with a time constant determined by the capacitance of the capacitor 706 and the resistance of the resistor 704. When the voltage V1 exceeds a turn-on voltage for the transistor 708, the transistor 708 conducts and the output device 710 is activated. For example, the output device 710 can indicate that the UV monitoring circuit has detected exposure to a large amount of UV radiation. The amount of UV radiation exposure being detected can vary depending on the capacitance of the capacitor 706 and the resistance of the resistor 704.

**[0068]** FIG. 7B is a schematic diagram of a UV monitoring circuit 750 according to another embodiment of the invention. The UV monitoring circuit 750 includes a phototransistor 752. Although the phototransistor 752 may itself serve as a UV detector, in some implementations, an optical filter (not shown) would limit the radiation

that impinges on the phototransistor 752 in which case the phototransistor 752 together with the optical filter serves as the UV detector. A collector terminal of the phototransistor 752 is coupled to a power source Vcc. The power source Vcc can be a battery or solar cell(s). An emitter terminal of the phototransistor 702 is coupled to a first end of a resistor 754 as well as to an input to an analog-to-digital (A/D) converter 756. The second end of the resistor 754 couples to ground. The A/D converter 756 converts the voltage level at the emitter terminal of the phototransistor 702 to a digital voltage value having n bits. The digital voltage value represents the UV radiation impinging on the phototransistor 752. The digital voltage value is supplied to a controller 758. The controller 758 can be a microcontroller. In one embodiment, the microcontroller is a microprocessor. An output device 760 couples between the power source Vcc and ground. The output device 760 also couples to an output terminal of the controller 758. As sufficient light, namely, UV radiation impinges on the phototransistor 752, the phototransistor 752 conducts so that a voltage is supplied to the A/D converter 756 which produces the corresponding digital voltage value. The digital voltage value is dependent on the amount of UV radiation that impinges on the phototransistor 752. The controller 758 can then determine whether to activate the output device 760. For example, controller 758 can activate the output device 760 to indicate that the UV monitoring circuit has detected (i) current exposure to a large amount of UV radiation, and/or (ii) exposure to a large amount of UV radiation accumulated over a time period. Although not shown, the controller 758 can also receive sensor information from one or more other auxiliary sensors and signal other types of outputs via the output device 760.

**[0069]** FIG. 7C is a schematic diagram of a UV monitoring circuit 770 according to yet another embodiment of the invention. The UV monitoring circuit 770 includes a phototransistor 772. Although the phototransistor 772 may itself serve as a UV detector, in some implementations, an optical filter (not shown) would limit the radiation that impinges on the phototransistor 772 in which case the phototransistor 772 together with the optical filter serves as the UV detector. A collector terminal of the

phototransistor 772 is coupled to a power source Vcc. An emitter terminal of the phototransistor 772 is coupled to a first end of a resistor 774, a first end of a capacitor 776 and a gate terminal of a transistor 778. As an example, the transistor 778 can be an n-channel metal-oxide-semiconductor, enhancement-mode, field-effect transistor (MOSFET). An output device 780 couples between the power source Vcc and a drain terminal of the transistor 778. A second end of the resistor 774, a second end of a capacitor 776 and a source terminal of the transistor 778 are coupled to a drain terminal of a transistor 784. As an example, the transistors 784, 778 and 784 can be n-channel metal-oxide-semiconductor, enhancement-mode, field-effect transistors (MOSFETs). As one example, MOSFETs can be 2N7008 MOSFETs. The source terminal of the transistor 784 is coupled to ground. The gate terminal of the transistor 784 is coupled to a first end of a resistor 786 and a first end of a capacitor 788. A second end of the resistor 786 and the second end of the capacitor 788 are coupled to ground. The gate terminal of the transistor 784 is also coupled to the power source Vcc through a being-worn switch 782. A battery 790 can supply power to the UV monitoring circuit 770. As one example, the battery 790 can be a three (3) Volt lithium battery. The size and configuration of the battery 790 can also vary. In one example, the battery 790 can be a coin battery. In another example, the battery 790 can be a triple-A (AAA) battery. As sufficient light, namely, UV radiation impinges on the phototransistor 772, the phototransistor 772 conducts so that the voltage V1 couples to the power source Vcc through the phototransistor 772. The capacitor 776 then charges up in accordance with a time constant determined by the capacitance of the capacitor 776 and the resistance of the resistor 774. When the voltage V1 exceeds a turn-on voltage for the transistor 778, the transistor 778 conducts. However, in this embodiment, the transistor 784 also must conduct in order for the output device 770 is activated. The transistor 784 conducts when the "being worn" switch 782 is closed. The "being worn" switch 782 indicates whether the eyewear including the UV monitoring circuit 770 is being worn by its user. The sensitivity of the "being worn" switch 782 can be controlled by the capacitance of the capacitor 788 and the resistance of the resistor 786. For example, the output device 780 can indicate that the UV monitoring circuit 770 has detected

exposure to a large amount of UV radiation while the eyewear is being worn. The amount of UV radiation exposure being detected can vary depending on the capacitance of the capacitor 776 and the resistance of the resistor 774.

**[0070]** The UV monitoring circuits according to the invention can also include switches, such as a "being-worn" switch, reset switch and/or an on/off switch. A "being-worn" switch was, for example, discussed above with reference to FIG. 7C. A reset switch and an/on switch are further discussed below with reference to FIG. 7D.

**[0071]** FIG. 7D is a schematic diagram of a UV monitoring circuit 770' according to still yet another embodiment of the invention. The UV monitoring circuit 770' is generally similar to the UV monitoring circuit 770 of FIG. 7C, except that a reset switch 792, an on switch 794 and an off switch 796 are provided. Additionally, the resistor 786 is removed from the UV monitoring circuit 770'. The reset switch 792 can be a push button, such that when pressed discharges any charge on the capacitor 776. As a result, assuming the transistor 778 is conducting (i.e., on) when the reset switch is pushed, the transistor 778 stops conducting (i.e., off) because the voltage V1 is effectively zeroed and thus does not exceed the turn-on voltage for the transistor 778. Consequently, the output device 780 stops providing any output (e.g., audio stopped; display device cleared or stopped). Once the reset switch 792 is released, the capacitor 776 can again begin to accumulate charge representing UV radiation. The on switch 794 and the off switch can also be implemented as push button switches. When the on switch 794 is pressed, the capacitor 788 is charged so that the transistor 784 conducts (i.e., turns-on) and then remains on until the off-switch 796 is pressed. Although the reset switch 792, the on switch 794 and the off switch 796 are implemented as push button switches in FIG. 7D, other types of switches can be used.

**[0072]** FIG. 8 is a flow diagram of a UV monitoring process 800 according to one embodiment of the invention. The UV monitoring process 800 is, for example, performed by a UV monitoring system embedded within and/or tethered to a pair of glasses. The UV monitoring system can, for example, represent by any of the UV

monitoring systems 300, 400, 450, 460, 470 or 600 discussed above with reference to FIGs. 3, 4A – 4D and 6.

**[0073]** The UV monitoring process 800 begins with a decision 802 that determines whether the glasses are being worn. As noted above, the determination of whether the glasses are being worn can be done in a variety of ways. In any case, when the decision 802 determines that the glasses are not being worn, then the UV monitoring process 800 waits until the glasses are being worn. In other words, when the glasses are not being worn, the UV monitoring process 800 can stop, block (pause or wait) or deactivate until it is determined that the glasses are being worn.

**[0074]** On the other hand, when the decision 802 determines that the glasses are being worn, a UV radiation level is acquired 804. For example, the UV radiation level can be acquired 804 from electronic circuitry which can include a UV detector (e.g., photodetector). Next, UV information is determined 806 based on the UV radiation level (radiation data). For example, the UV information can pertain to normalized or calibrated radiation data, accumulated radiation data, or processed radiation data. Hence, although the UV radiation level (radiation data) could be output to the user, by outputting the UV information to the user of the glasses, more useful information can be presented to the user.

**[0075]** Next, the UV information can be output 808 to the output device. The UV information need not always be output 808 to the output device. For example, the UV information could be output 808 to the output device depending upon whether it signals a particular condition to the user. As another example, the UV information could be output to the output device on request by the user. As still another example, the UV information could be output to the output device based on a sensed condition or event. Next, a decision 810 can determine whether the UV monitoring process 800 should continue. When the decision 810 determines that the UV monitoring process 800 should not continue, then the UV monitoring process 800 waits until it is time to be continued. This allows the UV monitoring process 800 to be performed periodically or as needed, which can lead to reduced power consumption and/or more meaningful

output information to the user. While the UV monitoring process 800 is waiting, the some or all of the UV monitoring system can be in a reduced power consumption state. Nevertheless, when the decision 810 determines that the UV monitoring process 800 should continue, the UV monitoring process 800 returns to repeat the decision 802 and subsequent operations.

**[0076]** FIG. 9 is a flow diagram of a UV monitoring process 900 according to another embodiment of the invention. The UV monitoring process 900 is, for example, performed by a UV monitoring system embedded within and/or tethered to a pair of glasses. The UV monitoring system can, for example, represent by any of the UV monitoring systems 300, 400, 450, 460, 470 or 600 discussed above with reference to FIGs. 3, 4A – 4D and 6.

**[0077]** The UV monitoring process 900 begins with a decision 902 that determines whether adequate solar energy is present. In this embodiment, solar cells are required to provide adequate solar energy in order for the UV monitoring process 900 to be performed. In other words, the UV monitoring system (and thus the glasses) need to be in the presence of light. When the decision 902 determines that adequate solar energy (e.g., sunlight or artificial light) is not present, then the UV monitoring process 900 awaits adequate solar energy. In one implementation, the UV monitoring system performing the UV monitoring process 900 can automatically turn-off or deactivate when inadequate solar energy is present. Such operation facilitates passive UV monitoring with minimal user inputs.

**[0078]** On the other hand, when the decision 902 determines that adequate solar energy is present, a decision 904 determines whether the glasses are being worn. When the decision 904 determines that the glasses are not being worn, then the UV monitoring process 900 returns to repeat the decision 902 and subsequent operations. In effect, the UV monitoring process 900 is not performed when the decision 904 determines that the glasses are not being worn by the user. As noted above, the determination of whether the glasses are being worn can be done in a variety of ways.

**[0079]** Optionally, a delay can be inserted when the decision 904 determines that the glasses are not being worn so as to save power consumption. Such a delay would allow the UV monitoring process 900 to stop, halt, inactivate or otherwise wait for the period of the delay prior to returning to the decision 902 and subsequent operations. While the UV monitoring process 900 is stopped, halted, inactivated or otherwise waiting, some or all of the UV monitoring system can be in a reduced power consumption state.

**[0080]** Alternatively, when the decision 904 determines that the glasses are being worn, a decision 906 can determine whether an interval timer has expired. The interval timer can determine how frequently the UV radiation level is checked and/or how frequently radiation information is output to a display. The interval timer can also thus lead to reduced power consumption (i.e., low-power mode for the electronic circuitry). When the decision 906 determines that the interval timer has not expired, the UV monitoring process 900 waits for the interval timer to expire. During this period of waiting, the UV monitoring process 900 can place some or all of the UV monitoring system in a low-power mode. Alternatively, during this period of waiting, the UV monitoring process 900 can perform processing of other auxiliary sensors that can produce other sensor data which can be processed in conjunction with UV radiation levels.

**[0081]** Once the decision 906 determines that the interval timer has expired, a UV radiation level is acquired 908. Then, UV radiation information is output 910 to the user of the glasses based on the UV radiation level. For example, the UV radiation information can pertain to an instantaneous radiation level, an accumulated radiation level, or some reference radiation indication. An example of a reference radiation indication can be a numerical value, text or a graphic indication. One example of a numerical value implementation is a value representing a percentage of recommended daily dosage. Another example of a numerical value implementation is a value representing UV intensity. One example of a text implementation would be a word (e.g., "ok", "Burnt", etc.). One example of a graphic implementation would be a bar-type

graph. Another example of a graphic implementation would be a graphic symbol (e.g., a lobster symbol , a fire flames symbol, or a picture of a sun).

**[0082]** Next, the interval timer can be reset 912 and the UV monitoring process 900 can thereafter return to repeat the decision 902 and subsequent operations. As a result, the UV monitoring provided by the UV monitoring process 900 can be continuously performed so long as adequate solar energy is present and the glasses are being worn.

**[0083]** FIG. 10 is a flow diagram of a UV monitoring process 1000 according to yet another embodiment of the invention. The UV monitoring process 1000 is, for example, performed by a UV monitoring system embedded within and/or tethered to a pair of glasses. The UV monitoring system can, for example, represent by any of the UV monitoring systems 300, 400, 450, 460, 470 or 600 discussed above with reference to FIGs. 3, 4A – 4D and 6.

**[0084]** The UV monitoring process 1000 begins with a decision 1002 that determines whether adequate solar energy (e.g., sunlight or artificial light) is available. When the decision 1002 determines that adequate solar energy is not available, then the UV monitoring process 1000 is deactivated, blocked or effectively not invoked. In this embodiment, solar cells are required to provide adequate solar energy in order for the UV monitoring process 1000 to be performed. In other words, the glasses need to be in the presence of sufficient light. When the decision 1002 determines that adequate solar energy is not present, then the UV monitoring process 1000 awaits adequate solar energy.

**[0085]** Once the decision 1002 determines that adequate solar energy is available, then the UV monitoring process 1000 proceeds. Here, the UV monitoring process 1000 can optionally determine whether the glasses are being worn. In any case, as shown in FIG. 10, when the decision 1002 determines that adequate solar energy is available, a UV radiation level is acquired 1004. For example, the UV radiation level can be acquired by a UV detector (e.g., photodetector).

**[0086]** Next, the UV radiation level is accumulated 1006 during a time period. Here, the UV radiation levels acquired over a predetermined period of time period are accumulated 1006 so that the radiation information is based on an accumulation of radiation that has been acquired over the predetermined period of time. For example, the predetermined period of time can be one hour, four hours, eight hours, twelve hours, twenty-four hours, two days, four days, one week, one month or one year.

**[0087]** Thereafter, a decision 1008 determines whether a UV radiation warning is needed. Here, the accumulated UV radiation level can be compared with a threshold to determine whether the accumulated UV radiation is excessive. In one implementation, the threshold can vary with, or be personalized to, different users, such as based on skin type, age, or skin condition. A user of the glasses can input data (e.g., skin type) by way of at least one switch or button. In another implementation, a plurality of threshold levels can be used, e.g., to provide a progression of UV radiation levels. Alternatively, the glasses can use predetermined settings and offer several versions (e.g., different glasses for different skin types).

**[0088]** When the decision 1008 determines that the UV radiation warning is not needed, then the UV monitoring process 1000 returns to repeat the decision 1002 and subsequent operations so that the UV radiation level can continuously or periodically be monitored. In one embodiment, the UV monitoring process 1000 can reset the accumulated UV radiation after the period of time has been exceeded. In another embodiment, the accumulated UV radiation can be reset after no significant UV radiation is present for a period of time (e.g., 6-12 hours), after no significant solar energy is present for a period of time (e.g., 6-12 hours), or after not being worn for a period of time (e.g., 6-12 hours), whereby each evening, for example, the reset can automatically occur. On the other hand, when the decision 1008 determines that a UV radiation warning is needed, then a UV radiation warning is output 1010 to the user. The warning can be varied or personalized to the user, and/or can vary depending on the user, user preference, UV radiation level, or auxiliary sensor data. In one implementation, the warning can pertain to a recommendation (e.g., SPF

recommendation, get out of sun, high exposure warning, etc.). The radiation warning can be output 1010 via the output device. For example, as noted above, the output device can be a display, a speaker or a vibration device. Hence, the warning can be output to the user by displaying text or graphics, audio sounds, or physical actions. Following the output 1010 of the UV radiation warning, the UV monitoring process 1000 can return to repeat the decision 1002 and subsequent operations so that UV monitoring can continue.

**[0089]** FIG. 11 is a flow diagram of a UV monitoring process 1100 according to still yet another embodiment of the invention. The UV monitoring process 1100 is, for example, performed by a UV monitoring system embedded within and/or tethered to a pair of glasses. The UV monitoring system can, for example, represent by any of the UV monitoring systems 300, 400, 450, 460, 470 or 600 discussed above with reference to FIGs. 3, 4A – 4D and 6.

**[0090]** The UV monitoring process 1100 begins with a decision 1002 that determines whether adequate solar energy (e.g., light) is available. In one implementation, the UV monitoring system performing the UV monitoring process 1100 include at least one solar cell or at least one phototransistor, and the solar cell or phototransistor can be used to determine whether there is adequate solar energy available. Hence, when the decision 1102 determines that adequate solar energy is not available, then the UV monitoring process 1100 is deactivated, blocked or effectively not invoked. In this embodiment, solar cells are required to provide adequate solar energy in order for the UV monitoring process 1000 to be performed. In other words, the glasses need to be in the presence of sufficient light. When the decision 1102 determines that adequate solar energy is not present, then the UV monitoring process 1100 awaits adequate solar energy. In this condition, the UV monitoring system can be in a low power condition (e.g., essentially disabled).

**[0091]** Once the decision 1102 determines that adequate solar energy is available, then the UV monitoring process 1100 proceeds. Here, the UV monitoring process 1100 can optionally determine whether the glasses are being worn. In any

case, as shown in FIG. 11, when the decision 1102 determines that adequate solar energy is available, a decision 1104 determines whether the glasses are being worn by a user. When the decision 1104 determines that the glasses are not being worn or when the decision 1102 determines that adequate solar energy is not present, then a UV radiation level acquired through accumulation (described below) can be slowly dispersed 1106. In one embodiment, the rate or dispersal is substantially slower that the rate of accumulation of UV radiation level. For example, a UV radiation level might accumulate to cause a UV radiation warning in 1-2 hours of high UV sunlight, but might take 6-12 hours to disperse the previously accumulated radiation level after the sunlight is removed. Hence, the accumulation of UV radiation can tolerate temporary interruption of sunlight, such as when entering a building for a brief period of time (e.g., 15 minutes). Following the block 1106, the UV monitoring process 1100 returns to repeat the decision 1102 and subsequent blocks.

**[0092]** On the other hand, when the decision 1104 determines that the glasses are being worn, a UV radiation level is acquired 1108. For example, the UV radiation level can be acquired by a UV detector (e.g., photodetector). Next, the UV radiation level is accumulated 1110. Here, the UV radiation levels acquired can be combined so that radiation information can be based on an accumulation of radiation that has been acquired while the glasses are being worn.

**[0093]** Thereafter, a decision 1112 determines whether a UV radiation warning is needed. Here, the accumulated UV radiation level can be compared with a threshold to determine whether the accumulated UV radiation is excessive. In one implementation, the threshold can vary with, or be personalized to, different users, such as based on skin type, age or skin condition. In another implementation, a plurality of threshold levels can be used, e.g., to provide a progression of UV radiation levels. A user of the glasses can input data (e.g., skin type, preferences) by way of at least one switch or button. Alternatively, the glasses can use predetermined settings and offer several versions (e.g., different glasses for different skin types).

**[0094]** When the decision 1112 determines that the UV radiation warning is not needed, then the UV monitoring process 1100 deactivates 1114 the UV radiation warning. Alternatively, when the decision 1112 determines that the UV radiation warning is needed, then the UV monitoring process 1100 activates 1116 the UV radiation warning. The warning can be varied or personalized to the user, and/or can vary depending on the user, user preference, UV radiation level, or auxiliary sensor data. The radiation warning can be produced at an output device. For example, as noted above, the output device can be a display, a speaker or a vibration device. In one implementation, the warning is a graphical symbol or text that signals the user of the glasses that they have received a significant amount of UV radiation. Following the deactivation 1114 and the activation 1116, the UV monitoring process 1100 can return to repeat the decision 1102 and subsequent operations so that UV monitoring can continue.

**[0095]** The UV radiation warning can remain active anywhere from a brief period to continuously depending on the type of warning being provided. For example, an audio alert might sound for a few seconds, while a displayed alert might remain on for a longer duration. The UV radiation warning can be output differently depending on the power situation of the UV monitoring system. If the UV monitoring system is being solar powered, then the UV radiation warning can be remain active until deactivated. However, when the UV monitoring system is being battery powered, the UV radiation warning might be active for a brief period,

**[0096]** FIG. 12 is a block diagram of electronic circuitry 1200 according to one embodiment of the invention. The electronic circuitry 1200 can, for example, be used for the electronic circuitry 302 shown in FIGs. 4A, 4D and 6. The electronic circuitry 1200 includes a UV detector 1202 that outputs a UV level signal dependent on an amount of UV light impinging on the UV detector 1202. A UV accumulator 1204 receives the UV signal level and accumulates the UV level to produce an accumulated UV level. A level comparator 1206 can then compare the accumulated UV level to a threshold level. The threshold level can be fixed, selected, or determined. When the

accumulated UV level exceeds the threshold level, then an output driver 1208 operates to output one or more signals to cause an output device to produce an output. The output can be visual, audio, and/or physical. The threshold can be varied or personalized to the user, and/or can vary depending on the user, user preference, UV radiation level, or auxiliary sensor data. The level comparator 1206 can also use one or more threshold levels.

**[0097]** The threshold used by the level comparator 1206 can correspond to a recommended daily dosage of Ultraviolet radiation. The threshold can depend on or vary in view of one or more of user preferences, position (e.g., closer equator), intensity level of UV radiation, user skin color or type, or auxiliary sensor data, etc.

**[0098]** FIG. 13 is a schematic diagram of an electronic circuit 1300 for a UV detection system according to one embodiment of the invention. The electronic circuit 1300 is, for example, suitable for use as the electronic circuitry 1200.

**[0099]** The electronic circuit 1300 includes a phototransistor 1302 and a resistor (R1) 1304 coupled in series between a supply voltage (Vs) and ground. As light (of an appropriate frequency range) strikes the phototransistor 1302, a voltage V1 appears at a first node connecting the phototransistor 1302 to the resistor (R1) 1304. The voltage V1 induces a current I1 that passes through a diode 1305 and a resistor (R2) 1306. A voltage V2 at a second node then begins to rise from ground level to the level of V1 by the charging of a capacitor (C1) 1308 at a rate dependent on the amount of the current I1 and the capacitance and resistance of the capacitor (C1) 1308 and the resistances of the resistors (R2 and R3) 1306 and 1310, respectively. A Schmitt trigger inverter 1312 couples to the second node and receives the voltage V2 at its input. When the voltage V2 exceeds the turn-on voltage for the inverter 1312, the output of the inverter goes low and couples to a third node via a diode 1314. At this point, the low voltage at the third node couples to an input of a Schmitt trigger inverter 1316, which outputs a high voltage at a fourth node which charges a resistor (R3) 1318 and capacitor (C2) 1320. The resistor (R3) 1318 couples between the third and fourth nodes. The capacitor (C2) couples between the third node and ground. Once the voltage V3 has risen sufficiently,

the inverter 1316 switches to output a low voltage, thereby discharging the resister (R3) 1318 and the capacitor (C2) 1320. Hence, the inverter 1316, the resister (R4) 1318 and the capacitor (C2) 1320 form an oscillator. The outputs for the electronic circuit 1300 are complementary, a positive output from the fourth node and a negative output from an inverter 1322 coupled to the fourth node. These complementary outputs are well suited for driving a LCD type display device.

**[00100]** Although not shown in FIG. 13, the electronic circuit 1300 can optionally further include a reset switch. For example, if provided, the reset switch can be coupled between the second node and ground. While the reset switch is normally open, when closed the reset switch discharges the capacitor (C1) 1308. As an example, the reset switch can be implemented by a push button switch. Although the electronic circuit 1300 can automatically reset after no significant UV radiation is present for a period of time (such as noted above), the reset switch permits a user to manually reset the electronic circuit 1300 so as to clear and restart monitoring (e.g., accumulation) of UV radiation.

**[00101]** The electronic circuit 1300 can facilitate low power operation. In one implementation, the resistor (R1) 1304 can be made large. In another implementation, power dissipated by resistor (R1) can be conserved by using a phototransistor with very low sensitivity to light. Such a phototransistor can be made by covering a standard phototransistor with a layer of aluminized Mylar. Aluminized Mylar attenuates all light passing through it by a factor of approximately 1000, yet does not change the light's relative spectrum. In still another implementation, the supply voltage (Vs) supplied to the phototransistor 1302 is periodic, so that power consumed largely by the resister (R1), which need not be a high resistance, is substantially reduced, yet the phototransistor 1302 has a extended dynamic range. The sensitivity of the UV measurement can also be adjusted by changing the duty-cycle of the periodic supply voltage (Vs). These various implementations for low power operation can be used singly or in combination.

**[00102]** FIG. 14A is a schematic diagram of a periodic supply voltage circuit 1400 according to one embodiment of the invention. The periodic supply voltage circuit 1400 is, for example, suitable for use to provide a supply voltage (Vs) to the electronic circuit 1300 for a UV detection system. In this embodiment the supply voltage (Vs) is periodic. In other words, the supply voltage (Vs) uses pulse-width modulation. The periodic supply voltage circuit 1400 includes a Schmitt trigger inverter 1402 that is powered by a power supply (Vcc) when the UV detection system is operating (i.e., turned-on). At this point, the voltage (V5) at an input node is assumed low and couples to an input of the Schmitt trigger inverter 1402, which outputs a high voltage at an output node which charges a capacitor (C3) 1410 via resistor (R5) 1404 and resistor (R6) 1408. A diode 1406 conducts during charging, but blocks during discharging. The resistor (R5) 1404 couples between the input and output nodes. The diode 1406 and the resistor (R6) 1408 are coupled in series between the input and output nodes. The capacitor (C3) 1410 couples between the input node and ground. Once the input node (V5) has risen sufficiently, the inverter 1402 switches to output a low voltage at the output node (V6), thereby discharging the capacitor (C3) 1410 via the resistor (R5) 1404. Hence, the periodic supply voltage circuit 1400 forms an oscillator. The output for the periodic supply voltage circuit 1400 at the output node (V6) is the supply voltage (Vs) for the UV detection system. Given the diode 1406, the supply voltage (Vs) is in the high state for a short time and in the low state for a longer time.

**[00103]** Although the resistance and capacitance values for the electronic circuit 1300 and the periodic supply voltage circuit 1400 can vary widely with implementation and application, some exemplary values are as follows. For example, for the electronic circuit 1300, the resistor 1304 (R1) can be 22k ohms, the resistor (R4) can be 330k ohms, and the capacitor (C2) 1320 can be 0.1 microfarads (μf). The resistor (R2) 1306 and the resistor 1310 (R3) can, for example, be in the range of 1 - 50M ohms. The capacitor (C1) 1308 can, for example, be in the range of 1 – 100 μf. For example, for the periodic supply voltage circuit 1400, the resistor (R5) 1404 can be 10M ohms, the

resistor (R6) 1408 can be 200k ohms, and the capacitor (C3) 1410 can be 0.01 microfarads (μf).

**[00104]** FIG. 14B is a cross-sectional view of a UV detector arrangement 1450 according to one embodiment of the invention. The UV detector arrangement 1450 is formed on a printed circuit board 1452 that contains a hole (or opening) 1454. A phototransistor 1456 is placed in the hole 1454. A base 1458 for the phototransistor 1456 is used to electrically connect the phototransistor 1456 to the printed circuit board 1452 via solder 1460. A film of aluminized Mylar 1462 is attached to the top of the printed circuit board 1452 at the hole 1454. The aluminized Mylar 1462 serves as a sensitivity reducer since is generally attenuates the light that impinges on the phototransistor 1456. The aluminized Mylar 1462 can be attached to the printed circuit board 1452 by an adhesive, such as epoxy. Attached to the top of the aluminized Mylar 1462 is an aluminum sheet 1464 with an opening 1466. The opening 1466 corresponds to, but has a substantially smaller diameter, than the hole 1454. Hence, the aluminum sheet 1464 further restricts light (i.e., restricts volume of light) impinging on the phototransistor 1456. An optical filter 1468 is placed over the aluminum sheet 1464 at the vicinity of the hole 1454. As an example, the optical filter 1468 primarily pass UV radiation. The UV radiation then is limited by the opening 1466 in the aluminum sheet 1464, attenuated by the aluminized Mylar 1462, and then the attenuated UV radiation is sensed by the phototransistor 1456. The aluminum sheet 1464 and the optical filter 1468 can be attached with an adhesive, such as epoxy.

**[00105]** Optionally, the back side of the printed circuit board 1452 at the vicinity of the phototransistor 1456 can attenuate or block light that might otherwise impinge on and be sensed by the phototransistor 1456. As shown in FIG. 14B, an aluminum sheet 1472 can be attached to the back side of the printed circuit board 1452 behind the phototransistor 1456. The aluminum sheet 1472 can be attached with an adhesive, such as epoxy.

**[00106]** Finally, the top of the UV detector arrangement 1450, except for the optical filter 1468, can be encapsulated by a top encapsulant 1470. For example, the

top encapsulant 1470 can be epoxy. The bottom of the UV detector arrangement 1450 can be encapsulated by a bottom encapsulant 1474. For example, the bottom encapsulant 1474 can be epoxy. The epoxy used for the encapsulant 1470 or 1474 can be opaque (e.g., block epoxy) to further assist in blocking light.

**[00107]** FIGs. 15A, 15B and 15C are UV detection systems. These UV detection systems are compact modular systems. The UV detection systems can be built on a single substrate that is designed to be inserted into an end product. Since the UV detection system is compact and modular, the end product need only have an opening, cavity or container to hold or encompass the UV detection system. As such, the end product can quickly be transformed into an end product capable of providing UV monitoring. Advantageously, in one embodiment, the UV detection system is such that is has minimal impact on design of the end product and no tedious wiring is required. For example, in case in which the end product is an eyeglass frame, a temple of the eyeglass frame can have an opening, cavity or container to hold or encompass the UV detection system, whereby no other changes or complications to the eyeglass frames need be imposed. Other such end-products can include: hats, shoes, tee-shirt, swimming-suit, key-ring, purse, beer can holder, and other consumer products.

**[00108]** FIG. 15A is a cross-sectional diagram of a UV detection system 1500 according to one embodiment of the invention. The UV detection system 1500 is build on a substrate 1502. The substrate 1502 can be a printed circuit board, a flexible tape or film (e.g., Kapton® polyimide film), ceramic, and like as known in the art. The UV detection system 1500 includes a power source 1504, an optical sensor 1506, electrical circuitry 1508 and a display device 1510 (e.g., LCD or LED). The display device 1510 is one type of output device, so it should be recognized that other embodiment can utilize other types of output devices. The power source 1504 is, for example, a battery or a solar panel of one or more solar cells. For example, if the power source 1504 is a battery, the battery can be a coin battery, such as often used in electronic watches. In one embodiment, the optical sensor 1506 is a phototransistor. In one embodiment, the electrical circuitry 1508 includes one or more of analog electrical components (e.g.,

capacitors, resistors, diodes, transistors) or integrated circuits. Any such integrated circuits can be provided in a variety of packages, but surface mount packages can help maintain a thin profile for the UV detection system 1500. The UV detection system 1500 shows components of the system mounted to both sides of the substrate 1502.

**[00109]** FIG. 15B is a cross-sectional diagram of a UV detection system 1520 according to another embodiment of the invention. The UV detection system 1520 can utilize the same or similar components as the UV detection system 1500. However, unlike the UV detection system 1500, the UV detection system 1520 mounts all components on one side of the substrate 1502. The effect of the UV detection system 1520 is a thinner module, though the substrate 1502 may be longer, as compared to the UV detection system 1500 shown in FIG. 15A.

**[00110]** FIG. 15C is a cross-sectional diagram of a UV detection system 1540 according to another embodiment of the invention. The UV detection system 1540 can utilize the same or similar components as the UV detection system 1500. However, unlike the UV detection system 1500, the UV detection system 1520 mounts the optical sensor 1506 at or near the edge of the substrate 1502. This has the potential advantage of positioning the UV detector 1506 is a position so that it is better able to receive incident light. The mounting of the optical sensor 1506 with respect to the substrate 1502 can also be flexible so that the optical sensor 1506 can be positioned, such as angularly positioned with respect to the substrate 1502 and/or angularly oriented when assembled into an opening, cavity or container of an end-use product. For example, the optical sensor 1506 could be soldered onto the substrate 1502 tipped at an angle. Alternatively, a small prism could be mounted on top of the optical sensor 1506, providing an angled direction of sensitivity. For example, the prism could be formed in place by filling a small, angled, box with clear optical adhesive (such as epoxy) that, when set would provide a prism, efficiently-coupled to the optical sensor 1506.

**[00111]** The optical sensor 1506 utilized in the UV detection systems 1500, 1520 and 1540 may use an optical filter so that its electrical sensitivity captures primarily the

target UV wavelengths of light. Hence, the optical sensor 1506 can include such optical filter. Alternatively, the optical filter can also be a separate component that is positioned proximate to the optical sensor 1506 when the end product is assembled. In other words, an optical filter can be another component of the UV detection system, or can be a separate component that is inserted when assembled into the end product. In one embodiment, an optical adhesive can be used to secure the optical filter to the optical sensor 1506.

**[00112]** FIG. 16A is a cross-sectional view of an eyewear housing 1600 containing a UV detection system according to one embodiment of the invention. Here, the eyewear housing 1600 can represent a portion of the temple region of a frame for a pair of glasses. Typically, the portion of the temple region is forward of the user's ear (i.e., towards the lens holders) when the glasses are being worn. The UV detection system contained within the eyewear housing 1600 is, for example, the UV detection system 1500 shown in FIG. 15A. The eyewear housing 1600 has an opening, cavity or container to receive the UV detection system. The eyewear housing 1600 also has a first opening 1602 and a second opening 1604. The first opening 1602 is aligned with the power supply 1504, which would in such an embodiment be a solar panel. Hence, the first opening 1602 can allow light to impinge on the solar panel. The second opening 1604 is aligned with the display device 1510 so that information displayed can be seen. The eyewear housing 1600 also includes an optical filter 1606 that is positioned proximate to the optical sensor 1506. In one embodiment, the optical filter 1606 is a separate component that inserted into an opening in the eyewear housing 1600 that is proximate (e.g., adjacent) to the optical sensor 1506.

**[00113]** FIG. 16B is a cross-sectional view of an eyewear housing 1620 containing a UV detection system according to another embodiment of the invention. The eyewear housing 1620 has an opening, cavity or container to receive the UV detection system, such as the UV detection system 1500 shown in FIG. 15A. The eyewear housing 1620 also has a first window 1622 and a second window 1624. The first window 1622 is aligned with the power supply 1504, which would in such an

embodiment be a solar panel. Hence, the first window 1622 can allow light to impinge on the solar panel. The second window 1624 is aligned with the display device 1510 so that information displayed can be seen. The eyewear housing 1600 also includes a third window 1626. The third window 1626 is positioned proximate to the optical sensor 1506. The third window 1626 can operate as an optical filter for the optical sensor 1506. The first and second windows 1622 and 1624 can be clear or colored so long as adequate light passes through.

**[00114]** FIG. 16C is a cross-sectional view of an eyewear housing 1640 containing a UV detection system according to still another embodiment of the invention. The eyewear housing 1640 is generally similar to the eyewear housing 1620 illustrated in FIG. 16B. However, FIG. 16C illustrates one way to secure the UV detection system within the portion of the temple region of the eyewear housing 1640. In particular, the eyewear housing 1640 include a stand 1642 and an adhesive material 1644. When assembled, the UV detection system can be placed within the temple region of the eyewear housing 1640 and positioned against the stand 1642, then the adhesive 1644 can be provided within the temple region to secure the UV detection system in position. The adhesive can vary widely, such as glue, double-stick tape, silicone rubber, epoxy, etc.

**[00115]** FIG. 16D is a cross-sectional view of an eyewear housing 1660 containing a UV detection system according to yet still embodiment of the invention. The eyewear housing 1660 is generally similar to the eyewear housing 1600 illustrated in FIG. 16A, except that the electrical circuitry 1508 may be repositioned on the substrate 1502 and a switch base 1662 and a button switch 1664 are provided. As shown in FIG. 16D, the switch base 1662 can attach to the substrate 1502 and thereby support the button switch 1664 that protrudes outside of the eyewear housing 1660 so that a user can press the button.

**[00116]** In general, the UV detection system according to the invention can make use of zero or more switches. One type of switch is a button switch, such as a push-

button switch. As an example, the switch can serve as a reset switch or an on/off switch.

**[00117]** FIG. 17A is a cross-sectional view of a module housing 1700 according to one embodiment of the invention. As shown in FIG. 17A, the module housing 1700 can operate as a housing for the UV detection system 1500 shown in FIG. 15A. The module housing 1700 includes a first window 1702 and a second window 1704. The first window 1702 can be proximate to the display device 1510, and the second window 1704 can be proximate to the power supply 1504, which would in such an embodiment be a solar panel. The first and second windows 1702 and 1704 can be clear or colored so long as adequate light passes through. In this embodiment, the thickness of the first and second windows 1702 and 1704 is greater than the thickness of the walls of the module housing 1700. The module housing 1700 can also include an opening 1706 that is positioned proximate to the optical sensor 1506. Still further, although not illustrated in FIG. 17A, the module housing 1700 can further include one or more vents or holes so that air can circulate through the module housing 1700. Alternatively, the module housing 1700 housing could not include vents or holes, and be water-proof.

**[00118]** The module housing 1700 is a housing for a module, such as a UV detection system. The module housing 1700 is then placed into an opening, cavity or container of an eyewear housing, such as a temple region of the eyewear housing. The module housing 1700 protects the module. The module housing 1700 can also be used to regularize or standardize the form factor for the UV detection system, such that the opening, cavity or container of the eyewear housing can be regularized or standardized.

**[00119]** FIG. 17B is a cross-sectional view of an eyewear housing 1720 according to one embodiment of the invention. The eyewear housing 1720 has an opening, cavity or container 1721 for receiving the module housing 1700. As shown in FIG. 17B, the module housing 1700 is contained by the eyewear housing 1720. The eyewear housing 1720 includes an opening 1722 that corresponds to the first window 1702 of the module housing 1700. The eyewear housing 1720 also includes an opening 1724

that corresponds to the second window 1704 of the module housing 1700. Still further, the eyewear housing 1720 can include an optical filter 1726 corresponding to the third opening 1706 of the module housing 1700 (and thus proximate to the optical sensor 1506). The module housing 1700 can, for example, be held in position with respect to the eyewear housing 1720 by an adhesive or by an interference fit.

**[00120]** FIG. 18 is a cross-sectional view of an eyewear housing 1800 having a reflective-type filter according to one embodiment of the invention. Here, the eyewear housing 1800 can represent a temple region of a frame for a pair of glasses. Typically, a large percentage of the temple region is in front of the user's ear when the glasses are being worn. The eyewear housing 1800 has an internal cavity 1802 where a circuit board 1804 is provided. Electrically coupled to the circuit board 1804 are a UV detector 1806 (i.e., photodetector), electrical circuitry 1808, a display device (e.g., LED, LCD) 1810, and solar cell(s) 1812. As a result, the circuit board 1804 and the UV detector 1806, the electrical circuitry 1808, the display device 1810 and the solar cell(s) 1812 are within the internal cavity 1802 and thus embedded within the eyewear housing 1800.

**[00121]** A UV reflector 1814 is mounted on an internal support 1816. Light impinges on the UV reflector 1814 via an opening 1818 in the eyewear housing 1800. The opening 1818 allows light to pass through to the UV reflector 1814. In one embodiment, there can be a piece of transparent material at the opening 1818 to prevent dust or dirt from getting through the opening 1818 into the internal cavity 1802. The opening 1818 can also be considered a transparent region in the eyewear housing 1800. The light reaching the UV reflector 1814 that is in the UV wavelength is reflected towards the UV detector 1806, whereas other wavelength light is not reflected. As a result, the reflector 1814 serves as a reflective-type filter, that is, a type of optical filter. For example, the reflector 1814 can be made of a material that substantially reflects UV light but does not reflect non-UV light. An example of one such reflector is known as a UV hot mirror. Also, the eyewear housing 1800 can also include transparent portions 1820 and 1822 which are adjacent to the display device 1810 and the solar cell(s) 1822, respectively. The transparent portion 1820 allows light from the display device

1810 to be seen from the outside of the eyewear housing 1800. The transparent portion 1822 allows light from an external light source to impinge on the solar cell(s) 1812. Alternatively, the display device 1810 could extend to and conform with an outer surface of part of the eyewear housing 1800, and the solar cell(s) 1812 could extend to and confirm with an outer surface of part of the eyewear housing 1800.

**[00122]** In one embodiment, a number of previously described transparent regions, portions, or sheets of materials, such as the transparent portions 1820 and 1822 in FIG. 18, can be translucent (including partially translucent). Still another alternative is that the eyewear housing 1800 could be primarily translucent.

**[00123]** The optical sensor or UV detector can receive impinging light from a variety of different directions (i.e., angle of incidence) depending on implementation. For example, the light can come from an opening in the top of the temple, such as shown in FIG. 18, or at a side of the temple, such as shown in FIGs. 16A-16C and 17B. As another example, the light can come from an opening at an angle between the top and the side of the temple. Typically, the optical sensor or the UV detector would be aligned with the opening at whatever angle it takes, such alignment tends to maximize sensitivity of the optical sensor or the UV detector. Typically, the optimal angle is based on the latitude. Thus, at the equator, the UV detector should point upward. And at the north pole, the sensor should point horizontally. In one embodiment, the size of the opening can be larger to increase impinging light, or can be smaller to decrease impinging light. In another embodiment, the opening can be flared outward so as to increase the amount of impinging light.

**[00124]** The UV detection system can also have a "being-worn" switch as noted above. In one embodiment, the "being-worn" switch enables the UV monitoring system to automatically determine when to monitor UV radiation and when not to monitor UV radiation. In particular, the UV radiation can be monitored when an eyeglass frame having the UV detection system is "being-worn" and not when the eyeglass frame is not "being-worn." The "being-worn" switch can be positioned in the temple portion with the other components of the UV detection system. In one embodiment, the UV detection

system is provided, as a module as noted above, and which further includes a switch. The switch can, for example, be a "being worn" switch. By having the switch in the module, the manufacture and assembly of the end-product having the UV detection system is simplified. As examples, the "being-worn" switch can be an optical, magnetic or mechanical switching device.

**[00125]** The "being-worn" switch can make use of the situation that the temples are in an open position when the eyeglass frame is being worn, and in a closed position when not being worn. In one embodiment, the "being-worn" switch can be positioned at the temple proximate to a region that couples the temple to the lens holder. For example, the UV detection system (e.g., module) can be provided within the temple region near the end of the temple so that the "being word" switch is adjacent the lens portion of the eyeglass frame.

**[00126]** FIG. 19 is a side view of a temple 1900 for an eyeglass frame according to one embodiment of the invention. The side view of FIG. 19 shows an outer side of the temple 1900, namely, the side of the temple 1900 that faces outward when being worn. The temple 1900 includes therein a UV detection system 1902 internal to the temple 1900. A window 1904 is provided in the temple 1900 for light (e.g., sunlight) to impinge on an optical sensor of the UV detection system 1902. The window 1904 can also provide some optical filtering effects, such as noted above. Although not shown in FIG. 19, the temple 1900 may also have a window or opening for a solar panel. At a forward end 1906 of the temple 1900, a pin 1908 is exposed. The pin 1908 passes through an opening at the forward end 1906 of the temple 1900. The pin 1908 is coupled to a switch internal to the temple 1900 and part of the UV detection system 1902. When the pin 1908 is not depressed, as shown in FIG. 19, the switch informs the UV detection system 1902 that the eyeglass frame is closed, i.e., not being worn. On the other hand, when the eyeglass frame is opened, i.e., presumably being worn, the pin 1908 is depressed by the forward end 1906 abutting against a portion of a lens holder, thereby informing the UV detection system 1902 that the eyeglass frame is opened.

**[00127]** FIGs. 20A and 20B are top view diagrams of a portion of an eyeglass frame 2000 according to one embodiment of the invention. The eyeglass frame 2000 includes a lens holder 2002 and a temple 2004. The temple 2004 includes a UV detection system therein. The UV detection system includes an opening or window 2006 that corresponds to an optical sensor used by the UV detection system. The optical sensor is used as a "being-worn" switch. When the eyeglass frame 2000 is in the open position as shown in FIG. 20A, the optical sensor detects significant light, thereby informing the UV detection system that the eyeglass frame 2000 is presumably being worn. On the other hand, when the eyeglass frame 2000 is in the closed position as shown in FIG. 20B, the opening or window 2006 is covered by a flap 2008 provided on the lens holder 2002. When the flap 2008 covers the opening or window 2006, no significant light can be detected by the optical sensor. In such case, the UV detection system is informed that the eyeglass frame 2000 is not being worn.

**[00128]** FIG. 21 is a side view of a temple 2100 for an eyeglass frame according to one embodiment of the invention. The side view of FIG. 21 shows an inner side of the temple 2100, namely, the side of the temple 2100 that faces inward when being worn. The temple 2100 includes therein a UV detection system 2102 internal to the temple 2100. The temple 2100 may also have a window or opening (not shown) that corresponds to an output device (e.g., display). A window or opening 2104 is provided at a rearward portion of the temple 2100. The window or opening 2104 corresponds to an optical sensor (internal to the temple 2100) provided at the window or opening 2104. The window or opening 2104 allows light (e.g., sunlight) to impinge on the optical sensor. The optical sensor is coupled to the UV detection system 2102 via one or more wires 2106. When the temple 2100 of the eyeglass frame is being worn by a user, the optical sensor will be blocked from receiving significant amounts of light, thereby informing the UV detection system 2102 that the eyeglass frame is being worn. For example, the optical sensor can be blocked by the user's head or hair when the eyeglass frame is being worn. On the other hand, when the temple 2100 of the eyeglass frame is not being worn by a user, the optical sensor will receive significant

amounts of light, thereby informing the UV detection system 2102 that the eyeglass frame is not being worn. Of course, at night often little or no light will impinge on the optical sensor. Optionally, in such case the lack of any significant light (e.g., detected by another optical sensor or solar cell) can be used to ensure that the UV detection system does not operate at night, the eyeglass frame can be considered not being worn at night (even if being worn at night).

**[00129]** FIG. 22 is a side view of a temple 2200 for an eyeglass frame according to another embodiment of the invention. The side view of FIG. 22 shows an outer side of the temple 2200, namely, the side of the temple 2200 that faces outward when being worn. The temple 2200 includes therein a UV detection system 2202 internal to the temple 2200. Although not shown in FIG. 22, the temple 2200 may also have windows or openings for a solar panel and/or an optical sensor. At a forward end 2204 of the temple 2200, a magnetic switch 2206 is provided. The magnetic switch 2206 is internal to the temple 2200 and part of the UV detection system 2202. The magnetic switch 2206 can use a magnet to provide a switch. The magnetic switch 2206 switches from a first position to a second position when a metallic material is adjacent the forward end 2204 of the temple 2200. For example, such metallic material can be provided in a portion of a lens holder that abuts the forward end 2204 when the eyeglass frame has the temple 2200 open. Here, when the switch is in the second position because the metallic material is adjacent the forward end 2204 of the temple 2200, the UV detection system 1902 understands that the eyeglass frame is opened, i.e., presumably being worn. On the other hand, when the eyeglass frame is closed, i.e., not being worn, the switch is in the first position because the metallic material is no longer adjacent the forward end 2204 of the temple 2200. In this case, the UV detection system 2202 understands that the eyeglass frame is closed, i.e., not being worn). In one embodiment, the magnetic switch 2206 can be implemented by a Hall effect sensor. Alternatively, it should be understood that the magnetic switch could be provided at a portion of a lens holder that abuts the forward end 2204 when the eyeglass frame has the temple 2200 open, and the metallic material could be at the forward end 2204.

[00130] The "being worn" switch can also be used by a user to signal the UV detection system to provide its output at an output device, such as a display device. For example, when the "being worn" switch is closed (after being open), the UV detection system can output its text or graphical output to the display device. Typically, the displayed output would be displayed only for a limited period of time (e.g., 10 seconds). Such an approach is power efficient, yet permits the user to obtain the output information when desired. Alternatively, another switch (e.g., dedicated output switch) could be used to cause the output to be displayed for a limited period of time or while the switch is depressed.

[00131] The UV detection system can also make use of one or more switches to change operational settings, such as threshold levels, output type, user preferences, user physical characteristics (e.g., skin type), accumulation mode or non-accumulation mode, activation/deactivation of auxiliary sensors.

[00132] As previously noted, the UV detector can be implemented by at least one photodetector, e.g., such as a phototransistor. Although various different phototransistors can be utilized, one example of a suitable phototransistor is Part No. PT100MCOMP available from Sharp Microelectronics of the Americas. Alternatively, although the discussion above at times refers to phototransistors, the photodetector can also be a photodiode. In the case of a photodiode, similar circuitry to that noted above would be utilized. Although various different photodiodes can be utilized, one example of a suitable photodiode is Part No. PD100MCOMP available from Sharp Microelectronics of the Americas.

[00133] The optical filter described above is typically implemented by a material that passes radiation in the UV wavelength band and blocks radiation not in the UV wavelength band. Various materials can be used in this regard. In one embodiment, the material providing the optical filtering can be known as a UV cold mirror. However, in another embodiment, the optical filter may have other characteristics, such as a material (e.g., polycarbonate) that passes radiation not in the UV wavelength band and blocks radiation in the UV wavelength band. In another embodiment, the optical filter

can utilize a material that passes light primarily associated with the ultraviolet wavelength range while substantially blocking light of other wavelengths. Such a material can, for example, be a filter made from quartz-glass with nickel oxide, such as can be referred to as Wood's glass,. The material implementing the optical filter can also be configured in various ways, such as a plug for an opening or a coating on a surface. In one embodiment, the material implementing the optical filter can either pass or reflect the UV radiation.

**[00134]** An output (e.g., warning) to the user can vary in content and type. The type can be visual and/or audio. The content can be numerical, graphical, musical, textual, synthesized text, etc. A progression of warnings can be used to give more substantial warning (such as when prior warnings are ignored). The output can also be predetermined, dynamically determined or configurable. Still further, the output can be dependent on user preferences, user physical characteristics (e.g., skin type), auxiliary sensor information (e.g., location), and degree of health risk.

**[00135]** A UV monitoring system can also include a memory. The memory can be volatile or non-volatile. The memory can also be removable or non-removable with respect to the eyewear. If the memory is volatile, the UV monitoring system could include a battery to provide power to the memory so that stored data (e.g., accumulated radiation, user preferences, etc.) can be retained even when adequate solar energy is not available. As an example, the presence of a memory can allow storage of UV information for an extended period of time to acquire a historical understanding of UV information.

**[00136]** A UV monitoring system can also include a communication module. The communication module would allow data transmission to and from the UV monitoring system (namely, the eyewear) and an external device. The data being transmitted can, for example, be UV information, configuration data, user preferences, or auxiliary sensor data. The data transmission can be wireless or wireline based. The eyewear can further include a connector operatively connected to the UV monitoring system.

Such a connector can facilitate wireline based data transmission with respect to the UV monitoring system or the eyewear.

**[00137]** A UV monitoring system can be partially or fully tethered to a pair of glasses. For example, some of the components for monitoring UV radiation or one or more auxiliary sensors can be tethered to the eyewear. In one embodiment, the tethered components can be tethered at the neck or upper back region of the user. Tethering components allows for increased design freedom with the eyewear as well as additional area with which to house the components.

**[00138]** Still further, a UV monitoring system could be completely within a device or a base that can be tethered to eyewear.

**[00139]** A number of embodiments have been described above for an eyeglass frame, i.e., primary frame, are also applicable to an auxiliary frame. An auxiliary frame can attach to a primary frame through different techniques, such as using clips. Another technique to attach an auxiliary frame to a primary frame is by way of magnets. Examples of using magnets as an attachment technique can be found, for example, in U.S. Patent 6,012,811, entitled, "EYEGLASS FRAMES WITH MAGNETS AT BRIDGES FOR ATTACHMENT."

**[00140]** Still further, a UV monitoring system could be within another common product, such as a hat, purse, key-holder, cup-holder, or other consumer product.

**[00141]** The various embodiments, implementations and features of the invention noted above can be combined in various ways or used separately. Those skilled in the art will understand from the description that the invention can be equally applied to or used in other various different settings with respect to various combinations, embodiments, implementations or features provided in the description herein.

**[00142]** The invention can be implemented in software, hardware or a combination of hardware and software. A number of embodiments of the invention can also be embodied as computer readable code on a computer readable medium. The computer readable medium is any data storage device that can store data which can thereafter

be read by a computer system. Examples of the computer readable medium include read-only memory, random-access memory, CD-ROMs, magnetic tape, optical data storage devices, and carrier waves. The computer readable medium can also be distributed over network-coupled computer systems so that the computer readable code is stored and executed in a distributed fashion.

**[00143]** The advantages of the invention are numerous. Different embodiments or implementations may yield one or more of the following advantages. One advantage of the invention is that UV monitoring can be inconspicuously performed in conjunction with eyewear. Another advantage of the invention is that electrical components for UV monitoring can be embedded within a frame (e.g., temple) of eyewear. Still another advantage of the invention is that UV monitoring can be intelligently performed such that it operates only at likely appropriate times to improve accuracy and usefulness. Yet another advantage of the invention is that eyewear may further include one or more auxiliary sensors that can cause additional output to be provided to the user. Yet still another embodiment of the invention allows one or more electrical components for UV monitoring to be tethered to the eyewear.

**[00144]** Numerous specific details are set forth in order to provide a thorough understanding of the invention. However, it will be understood by those skilled in the art that the invention may be practiced without these specific details. The description and representation herein are the common meanings used by those experienced or skilled in the art to most effectively convey the substance of their work to others skilled in the art. In other instances, well-known methods, procedures, components, and circuitry have not been described in detail to avoid unnecessarily obscuring aspects of the present invention.

**[00145]** In the foregoing description, reference to "one embodiment" or "an embodiment" means that a particular feature, structure, or characteristic described in connection with the embodiment can be included in at least one embodiment of the invention. The appearances of the phrase "in one embodiment" in various places in the specification are not necessarily all referring to the same embodiment, nor are separate

or alternative embodiments mutually exclusive of other embodiments. Further, the order of blocks in process flowcharts or diagrams representing one or more embodiments of the invention do not inherently indicate any particular order nor imply any limitations in the invention.

**[00146]** The many features and advantages of the invention are apparent from the written description and, thus, it is intended by the appended claims to cover all such features and advantages of the invention. Further, since numerous modifications and changes will readily occur to those skilled in the art, it is not desired to limit the invention to the exact construction and operation as illustrated and described. Hence, all suitable modifications and equivalents may be resorted to as falling within the scope of the invention.

CLAIMS

1. A frame for eyeglasses, comprising:

a UV detector for sensing an amount of UV radiation; and

an electronic circuit operatively connected to said UV detector, said electronic circuit providing at least radiation information based on at least the amount of UV radiation sensed by said UV detector,

wherein said UV detector and said electronic circuit are at least partially embedded in said frame.

2. A frame as recited in claim 1, wherein said UV detector and said electronic circuit are at least partially embedded in at least one temple of said frame.

3. A frame as recited in claim 2, wherein said electronic circuit includes at least a circuit board and at least one electrical component.

3.1. A frame as recited in claim 3, wherein the at least one electrical component is one of a transistor and a controller.

3.2. A frame as recited in claim 1, wherein said UV detector and said electronic circuit are primarily internal to said frame.

3.3. A frame as recited in claim 1, wherein said UV detector and said electronic circuit are primarily internal to at least one temple of said frame.

3.4. A frame as recited in claim 1, wherein at least a portion of said frame is comprised by only an underlying circuit board.

4. A frame as recited in claim 1, wherein said UV detector comprises:

an optical filter for restricting passage of non-UV radiation therethrough; and

a photodetector for sensing the amount of UV radiation that passes through said optical filter.

5. A frame as recited in claim 4, wherein said optical filter, said photodetector and said electronic circuit are internal to said frame, and wherein said frame has an opening adjacent said optical filter to allow light to impinge on said photodetector

6. A frame as recited in claim 4, wherein said frame has temples, and

wherein said optical filter, said photodetector and said electronic circuit are at least partially embedded in at least one temple of said frame.

7. A frame as recited in claim 4, wherein said frame has temples, and

wherein said optical filter is provided at or adjacent to an outer surface of the at least one of said temples, whereby sunlight incident on said frame can be sensed by said photodetector via said optical filter.

8. A frame as recited in claim 4, wherein said optical filter primarily implements a high pass filtering operation, allowing radiation beyond the optical range to pass.

9. A frame as recited in claim 4, wherein said optical filter is a material that restricts passage of radiation having a frequency above the optical radiation.

10. A frame as recited in claim 4, wherein said optical filter is placed or integral with a temple of said frame.

11. A frame as recited in claim 4, wherein said photodetector is a photodiode or a phototransistor.

11.1. A frame as recited in claim 1, wherein said UV detector comprises:

an optical reflector that substantially reflects UV radiation and substantially absorbs non-UV radiation; and

a photodetector for sensing the amount of UV radiation that is supplied to said photodetector via said optical reflector.

12. A frame as recited in claim 1, wherein said UV detector comprises:

an optical reflector that substantially reflects UV radiation and substantially absorbs optical radiation; and

a photodetector for sensing the amount of UV radiation that is supplied to said photodetector via said optical reflector.

13. A frame as recited in claim 1, wherein the eyeglasses are sunglasses.

14. A frame as recited in claim 1, wherein the eyeglasses are fit-over glasses.

15. A frame as recited in claim 1, wherein said frame further comprises:

at least one additional sensor operatively connected to at least said electronic circuit.

16. A frame as recited in claim 15, wherein said additional sensor provides additional sensor information that is used by said electronic circuit to determine whether said frame is being worn by a user.

17. A frame as recited in claim 16, wherein said at least one additional sensor comprises at least one thermal sensor.

18. A frame as recited in claim 16, wherein said at least one additional sensor comprises a plurality of thermal sensors for use in determining whether said frame is being worn by the user.

19. A frame as recited in claim 16, wherein said at least one additional sensor comprises at least one motion detector.

20. A frame as recited in claim 15, wherein said additional sensor further provided is at least partially embedded in the at least one temple of said eyeglass frame.

21. A frame as recited in claim 15, wherein said additional sensor provides sensor information pertaining to at least one of ambient temperature, humidity, and barometric.

22. A frame as recited in claim 15, wherein said additional sensor provides sensor information pertaining to health or physical condition of a user of said frame.

23. A frame as recited in claim 15, wherein said frame further comprises an output device to inform a user of said frame of the UV information and sensor information, and

wherein said electronic circuit further being operatively connected to said output device to direct said output device to present the UV information and the sensor information to the user.

24. A frame as recited in claim 23, wherein the UV information and the sensor information can be alternatively displayed at said output device.

25. A frame as recited in claim 1, wherein said frame further comprises:

at least one solar element for converting light into electrical energy, the electrical energy being provided to said electronic circuit.

26. A frame as recited in claim 25, wherein said frame further comprises:

at least one battery operatively connected to provide electrical energy to said electronic circuit.

27. A frame as recited in claim 1, wherein said frame further comprises:

at least one battery operatively connected to provide electrical energy to said electronic circuit.

28. A frame as recited in claim 27,

wherein said at least one battery is rechargeable, and

wherein said frame further comprises:

at least one solar element for converting light into electrical energy, the electrical energy being provided to recharge said at least one battery.

29. A frame as recited in claim 1, wherein said frame further comprises an output device to inform a user of said frame of the UV information, and

wherein said electronic circuit further being operatively connected to said output device to direct said output device to present the UV information to the user.

30. A frame as recited in claim 29, wherein the UV information is a UV radiation warning.

31. A frame as recited in claim 29, wherein the UV information is a UV intensity value.

32. A frame as recited in claim 29, wherein the UV information depends on UV radiation collected and integrated across a duration of time.

33. A frame as recited in claim 29, wherein the UV information is an audio indication.

33..1 A frame as recited in claim 29, wherein the UV information is a visual indication.

34. A frame as recited in claim 29, wherein said output device is a speaker.

35. A frame as recited in claim 34, wherein said speaker produces an audible sound for the user.

36. A frame as recited in claim 29, wherein said output device is a display device.

37. A frame as recited in claim 36, wherein said display device displays the UV information for the user.

37.1. A frame as recited in claim 37, wherein the UV information being displayed on said display device is at least one of: a numerical value, a word or a graphic symbol.

38. A frame as recited in claim 37, wherein said display device comprises a liquid crystal display.

39. A frame as recited in claim 37, wherein said display device comprises a light emitting diode.

40. A frame as recited in any of claims 1-39, wherein said frame further comprises a connector that facilitates electrical connection with respect to said electronic circuit.

40..1 A frame as recited in any of claims 1-39, wherein said frame further comprises a switch that controls supply of power, a rest operation or a user setting for said electronic circuit.

41. A frame as recited in claim 40, wherein said connector is provided at a rear-ward position of an arm of said frame.

42. A frame as recited in any of claims 1-41, wherein said frame further comprises at least one additional electrical component tethered to said frame.

42.1. A frame as recited in claim 42, wherein the at least one electrical components is tethered to said frame via an eyeglass cord having an electrical conductor therein..

42.2. A frame as recited in claim 42 or 42.1, wherein the at least one electrical components is tethered to said frame at a position behind the neck or upper back region of a user when said frame is being worn by the user.

43. A frame as recited in claim 42, wherein said at least one additional electrical component being tethered to said frame is at least electrically coupled to said electronic circuit.

44. A method for monitoring ultraviolet radiation for a person, said method comprising:

obtaining a pair of glasses, the glasses having a lens holder for holding lens, a pair of temples, and a ultraviolet detector, the pair of glasses being worn by the person;

acquiring a radiation level impinging on the ultraviolet detector of the pair of glasses being worn by the person wearing the pair of glasses; and

outputting radiation information to the person based on the radiation level.

45. A method as recited in claim 44,

wherein said method further comprises:

determining whether the person is wearing the pair of glasses, and

wherein said acquiring and said outputting are performed only when the person is determined to be wearing the pair of glasses.

46. A method as recited in claim 44,

wherein said method further comprises:

determining whether an adequate amount of solar energy is present, and

wherein said acquiring and said outputting are performed only when said determining determines that there is an adequate amount of solar energy.

47. A method as recited in claim 44,

wherein said method further comprises:

determining whether the person is wearing the pair of glasses; and

determining whether an adequate amount of solar energy is present, and

wherein said acquiring and said outputting are performed only when said determining determines that there is an adequate amount of solar energy and when the person is determined to be wearing the pair of glasses.

48. A method as recited in any of claims 44-47, wherein the ultraviolet detector is positioned at or within at least one of the temples.

48.1. A frame as recited in claim 44-47, wherein the radiation information being output is displayed on a display device, and wherein the radiation information being output is at least one of: a numerical value, a word or a graphic symbol.

49. An ultraviolet monitoring system, comprising:

a substrate;

an output device coupled to said substrate.

an ultraviolet detector coupled to said substrate; and

circuitry coupled to said substrate and electrically coupled to said output device and said ultraviolet detector.

50. An ultraviolet monitoring system as recited in claim 49, wherein said output device is mounted to said substrate, and wherein said ultraviolet detector is mounted to said substrate.

51. An ultraviolet monitoring system as recited in claim 49, wherein said output device, said ultraviolet detector and said circuitry are components, and where at least one component is mounted on each of the front and back sides of said substrate.

52. An ultraviolet monitoring system as recited in claim 49, wherein said ultraviolet monitoring system further comprises:

a power supplying device operatively connected to said circuitry.

53. An ultraviolet monitoring system as recited in claim 52, wherein said output device, said ultraviolet detector and said power supplying device are each mounted to said substrate.

54. An ultraviolet monitoring system as recited in claim 52, wherein said output device, said ultraviolet detector, said circuitry and said power supplying device are components, and wherein at least one the components is mounted on each of the front and back sides of said substrate.

55. An ultraviolet monitoring system as recited in claim 49, wherein the ultraviolet monitoring system is a self-sufficient module.

56. An ultraviolet monitoring system as recited in claim 55, wherein the ultraviolet monitoring system is embedded within a frame for eyeglasses.

57. An ultraviolet monitoring system as recited in claim 55, wherein the ultraviolet monitoring system is a module that is embedded within a temple of a frame for eyeglasses.

58. An ultraviolet monitoring system as recited in claim 49, wherein the ultraviolet monitoring system is a module that is embedded within a frame for eyeglasses.

59. An ultraviolet monitoring system as recited in claim 49, wherein the ultraviolet monitoring system is a module that is embedded within a temple of a frame for eyeglasses.

60. A pair of eyeglasses, comprising:

at least one lens holder;

a pair of temples; and

a ultraviolet monitoring system completely embedded within one of the temples.

61. A pair of eyeglasses as recited in claim 60, wherein the one of the temples has a cavity for receiving said ultraviolet monitoring system.

62. A pair of eyeglasses as recited in claim 60, wherein said pair of eyeglasses further comprises a cover to close the cavity after said ultraviolet monitoring system has be received into the cavity.

63. A pair of eyeglasses as recited in claim 60, wherein the one of the temples has at least one opening that substantially aligns with a component of said ultraviolet monitoring system when received into the cavity.

64. A pair of eyeglasses as recited in claim 60, wherein said ultraviolet monitoring system includes at least a ultraviolet sensor, a power source, circuitry and an output device.

65. A pair of eyeglasses as recited in claim 60, wherein said ultraviolet monitoring system further comprises at least one switch.

66. A pair of eyeglasses as recited in claim 65, wherein the at least one switch is a "being worn" switch.

67. A pair of eyeglasses as recited in claim 65, wherein the at least one switch is an output request switch.

68. A pair of eyeglasses as recited in claim 67, wherein the output request switch is a “being worn” switch.

69. A pair of eyeglasses as recited in claim 67, wherein the output request switch is a reset switch.

70. A pair of eyeglasses as recited in claim 67, wherein the output request switch is a user setting switch.

71. A pair of eyeglasses as recited in claim 67, wherein the output request switch is an on or off switch.

72. An electronic circuit for radiation detection as shown and described in the specification and/or drawings.

73. A frame for eyeglasses as shown and described in the specification and/or drawings.

74. A method, system, device, apparatus or computer readable medium as described in the specification and/or described in the drawings.

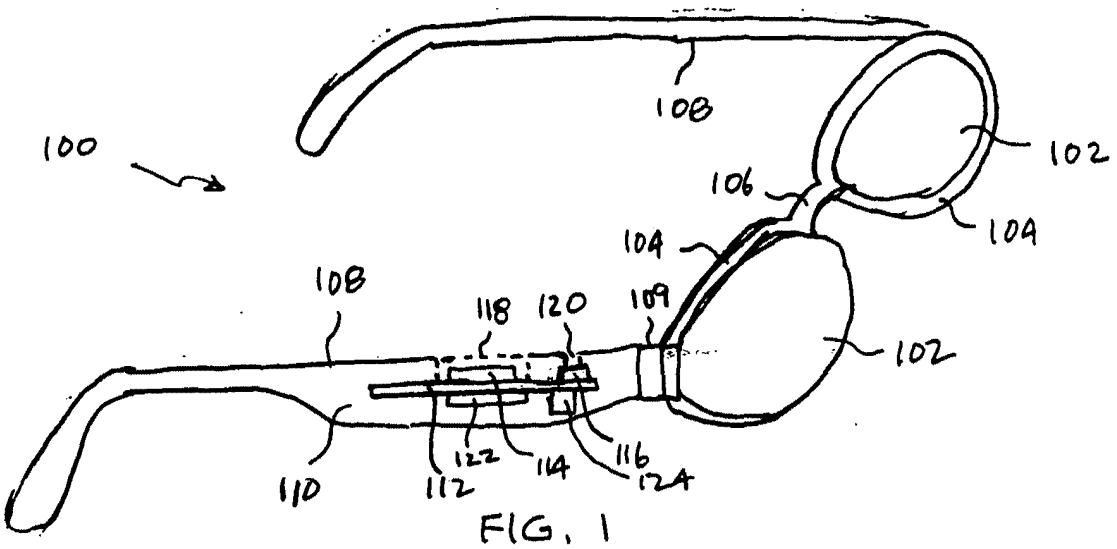


FIG. 1

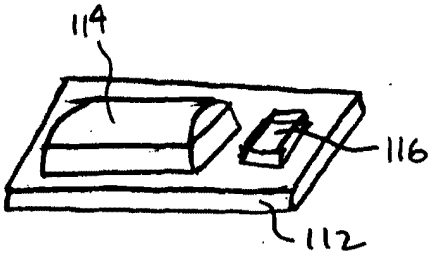


FIG. 2A

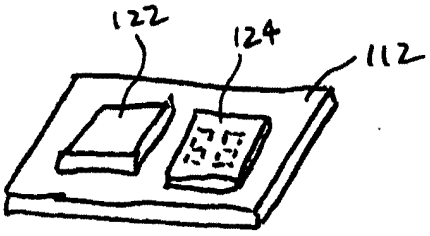


FIG. 2B

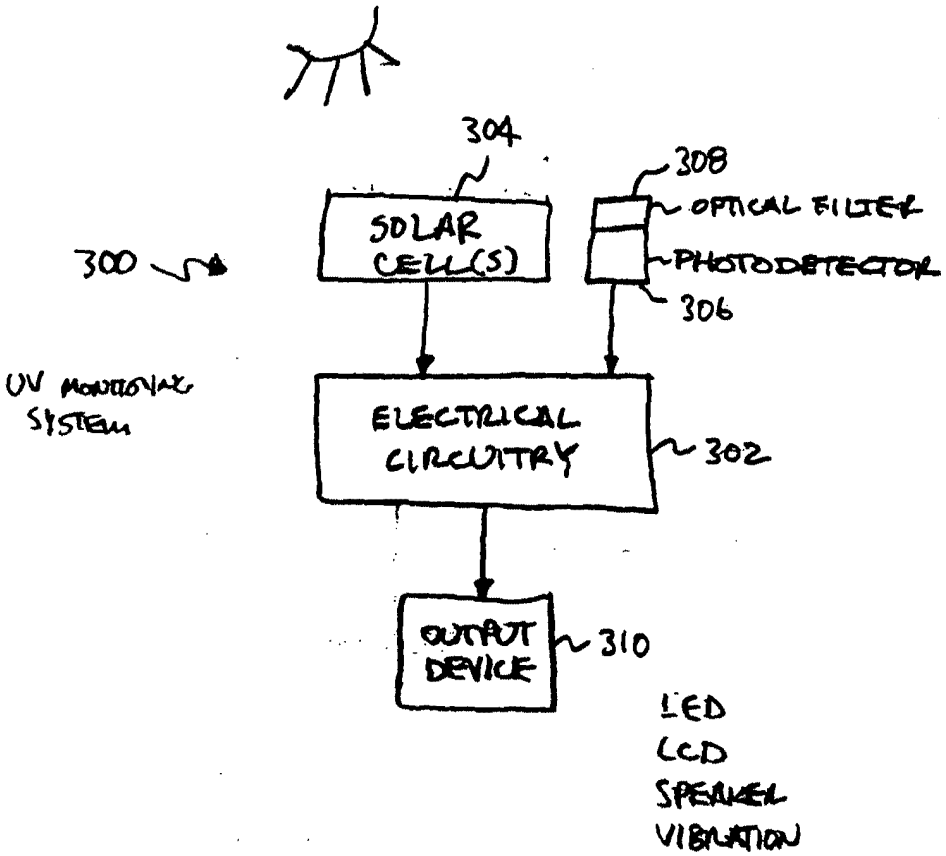
304
308
OPTICAL FILTER
SOLAR CELL(S)
PHOTODETECTOR
300
306
UV MONITORING SYSTEM
ELECTRICAL CIRCUITRY
302
OUTPUT DEVICE
310
LED
LCD
SPEAKER
VIBRATION

FIG. 3

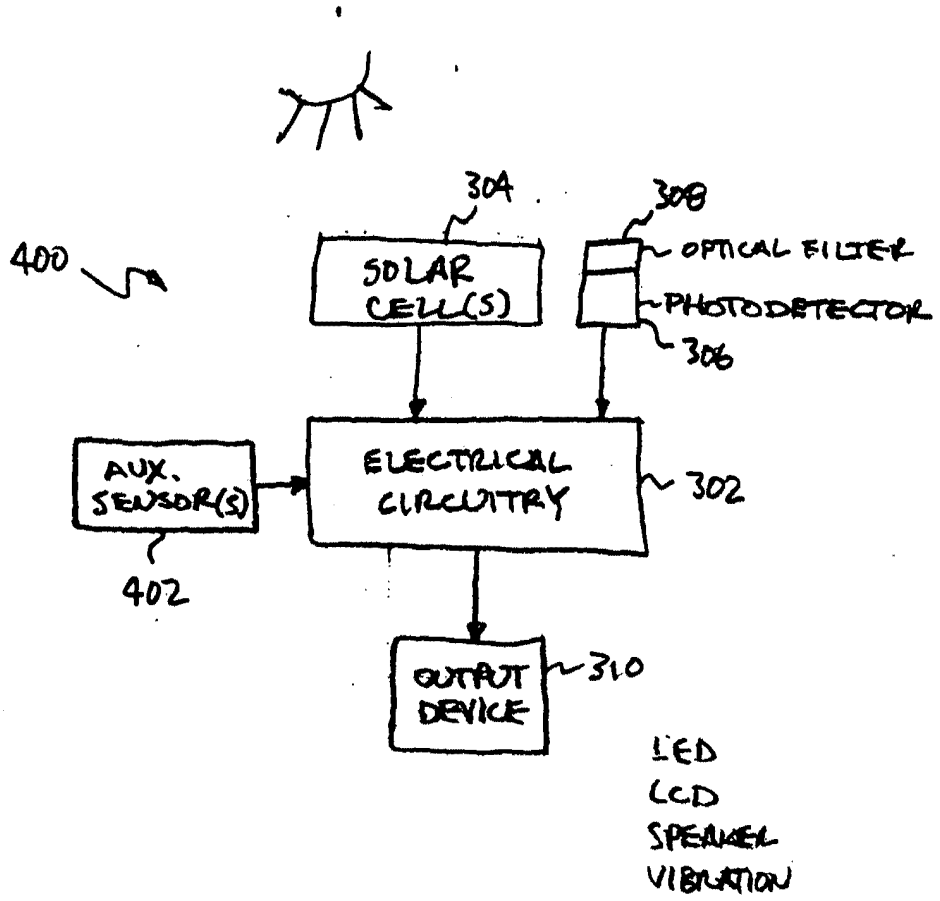
400
304
SOLAR CELL(S)
308
OPTICAL FILTER
PHOTODETECTOR
306
AUX. SENSOR(S)
402
ELECTRICAL CIRCUITRY
302
OUTPUT DEVICE
310
LED
LCD
SPEAKER
VIBRATION

FIG. 4A

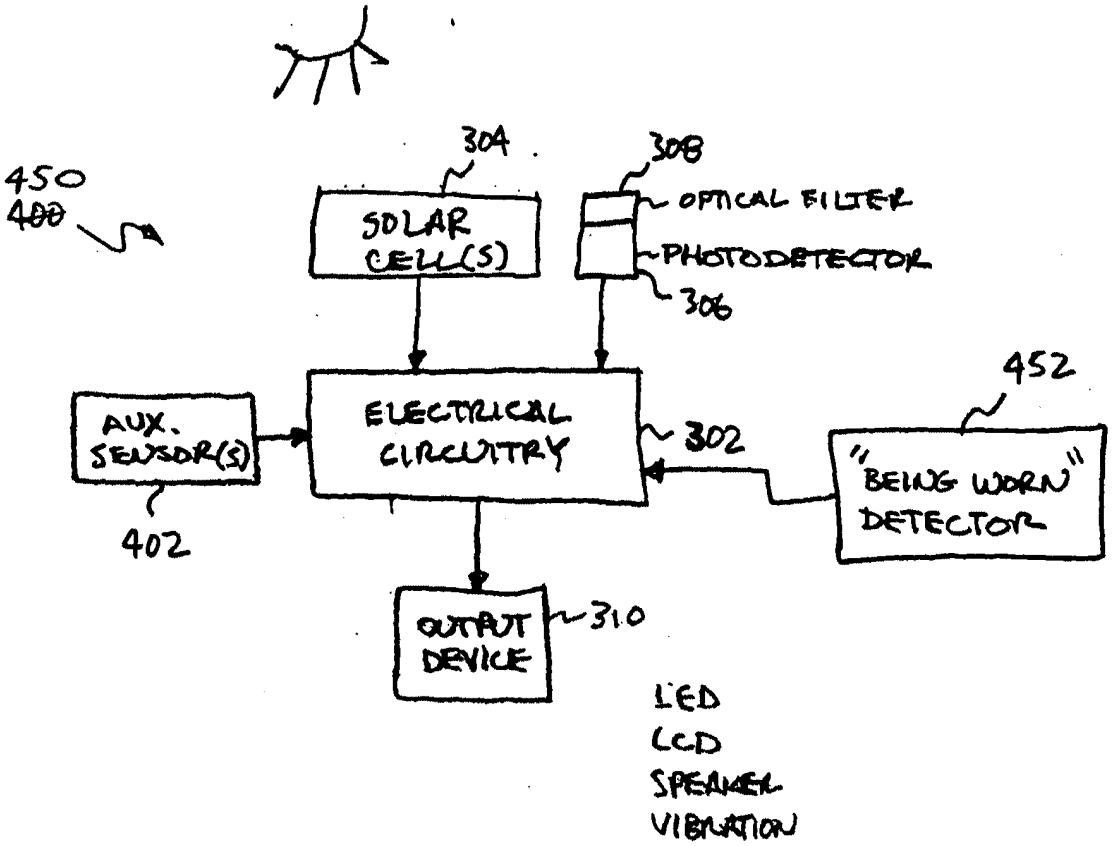
450
400
304
SOLAR CELL(S)
308
OPTICAL FILTER
PHOTODETECTOR
306
452
AUX. SENSOR(S)
402
ELECTRICAL CIRCUITRY
302
"BEING WORN" DETECTOR
OUTPUT DEVICE
310
LED
LCD
SPEAKER
VIBRATION

FIG. 4B

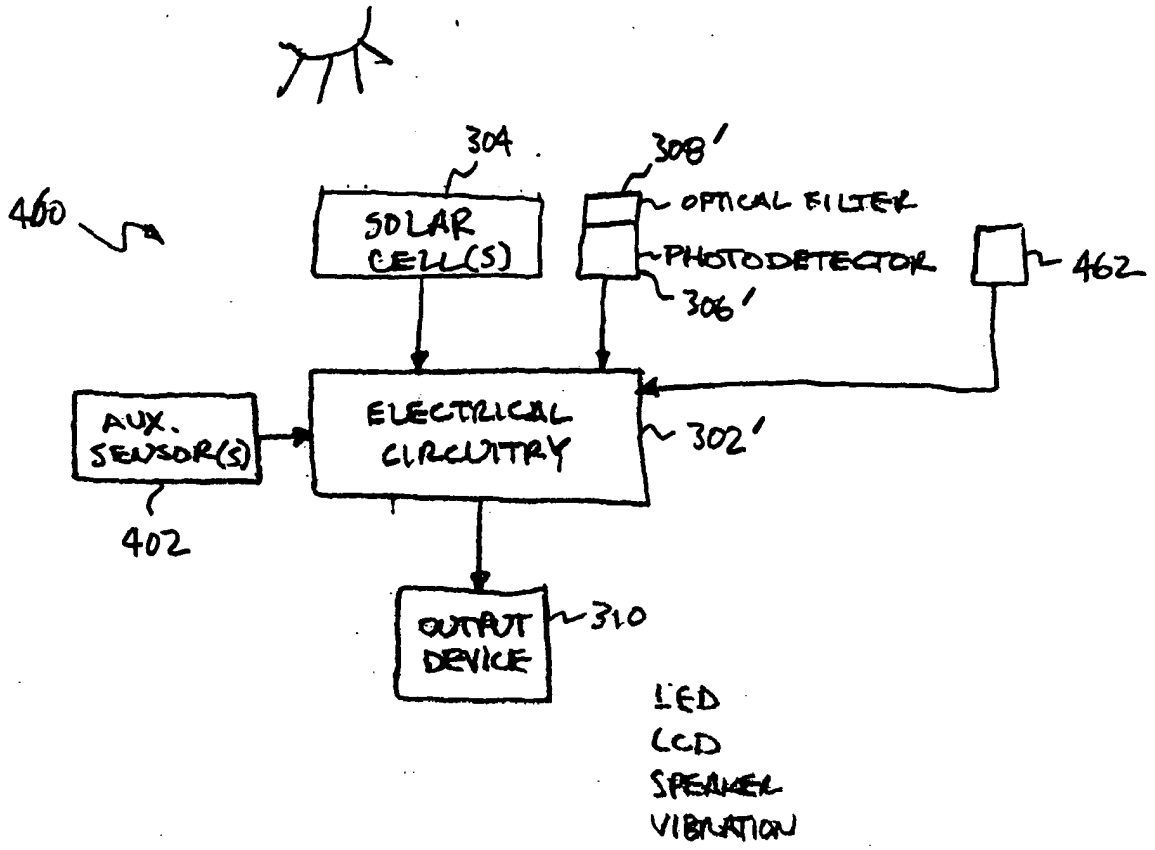
400
304
SOLAR CELL(S)
308'
OPTICAL FILTER
PHOTODETECTOR
306'
462
AUX. SENSOR(S)
402
ELECTRICAL CIRCUITRY
302'
OUTPUT DEVICE
310
LED
LCD
SPEAKER
VIBRATION

FIG. 4C

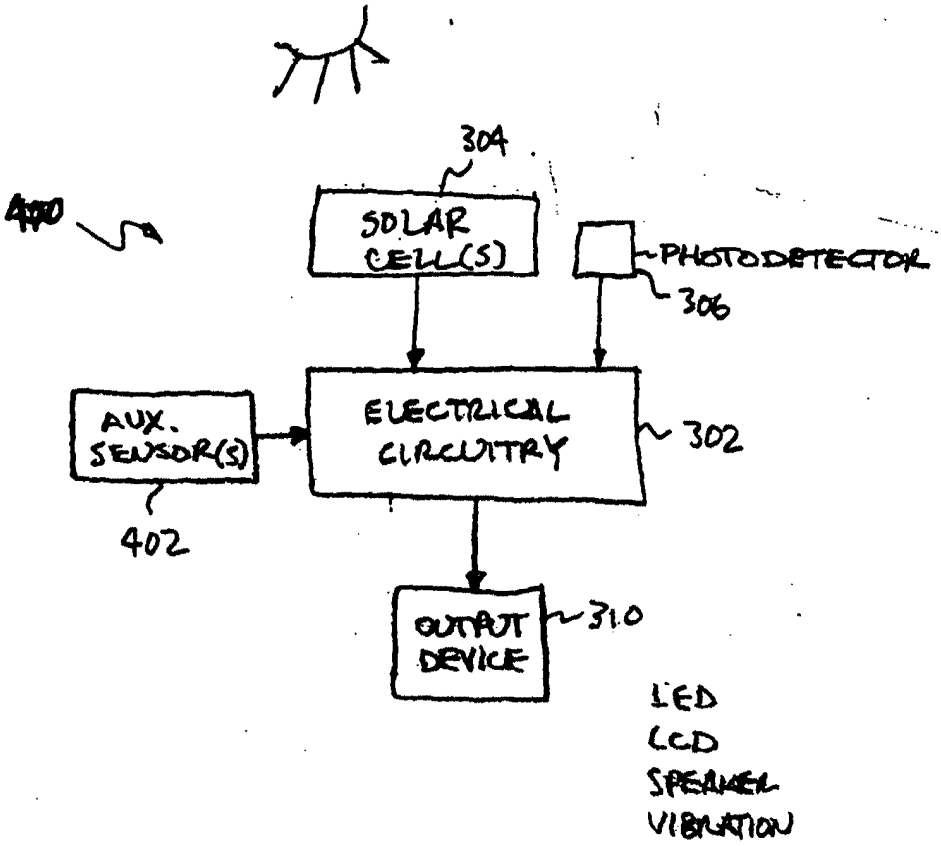
400
304
SOLAR CELL(S)
PHOTODETECTOR
306
AUX. SENSOR(S)
402
ELECTRICAL CIRCUITRY
302
OUTPUT DEVICE
310
LED
LCD
SPEAKER
VIBRATION

FIG. 4D

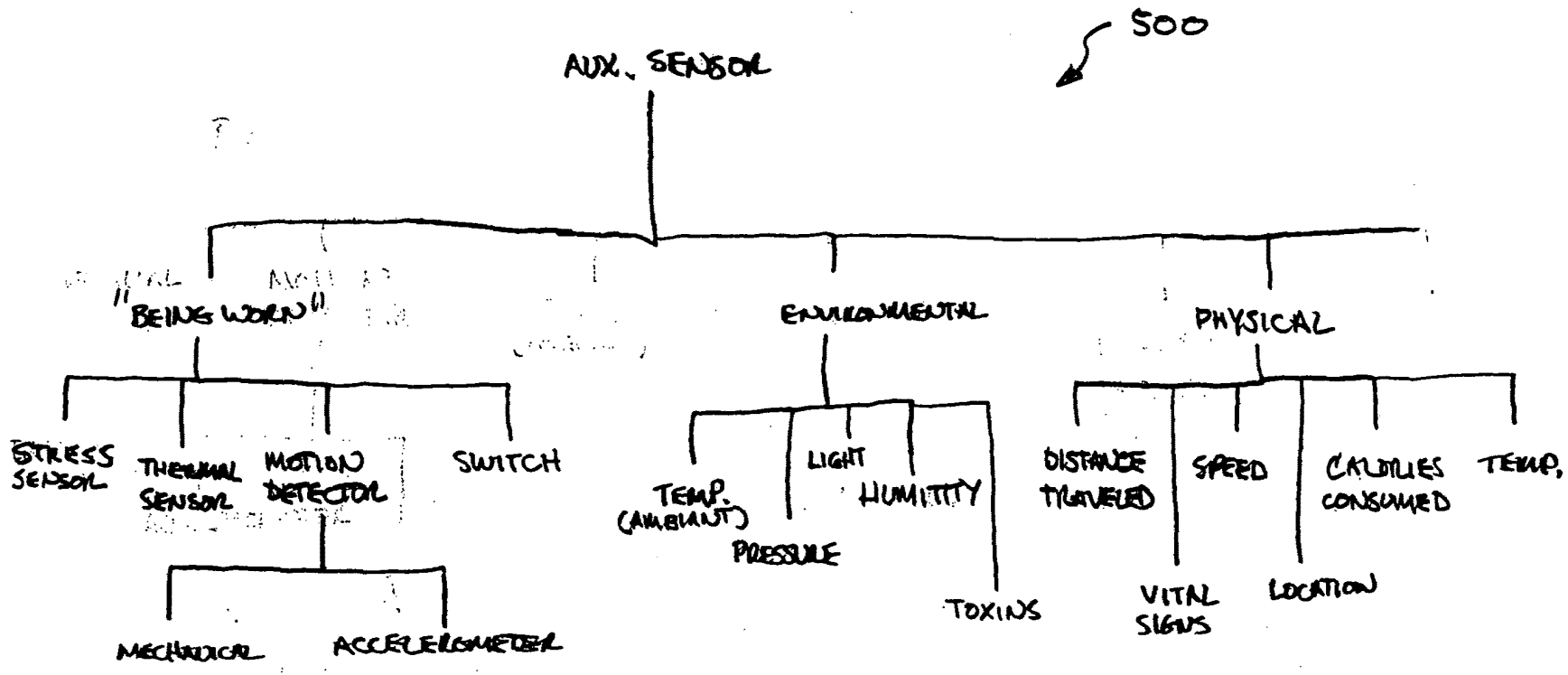
500
AUX. SENSOR
"BEING WORN"
ENVIRONMENTAL
PHYSICAL
STRESS SENSOR
THERMAL SENSOR
MOTION DETECTOR
SWITCH
MECHANICAL
ACCELEROMETER
TEMP. (AMBIANT)
PRESSURE
LIGHT
HUMITITY
TOXINS
DISTANCE TRAVELED
VITAL SIGNS
SPEED
LOCATION
CALORIES CONSUMED
TEMP.

FIG. 5

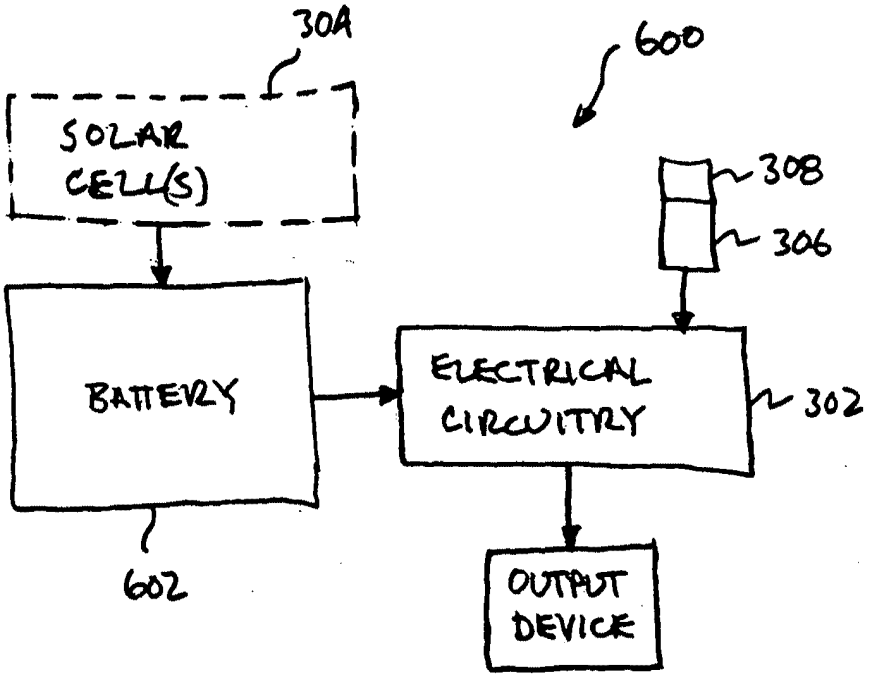
30A
600
SOLAR CELL(S)
308
306
BATTERY
ELECTRICAL CIRCUITRY
302
602
OUTPUT DEVICE

FIG. 6

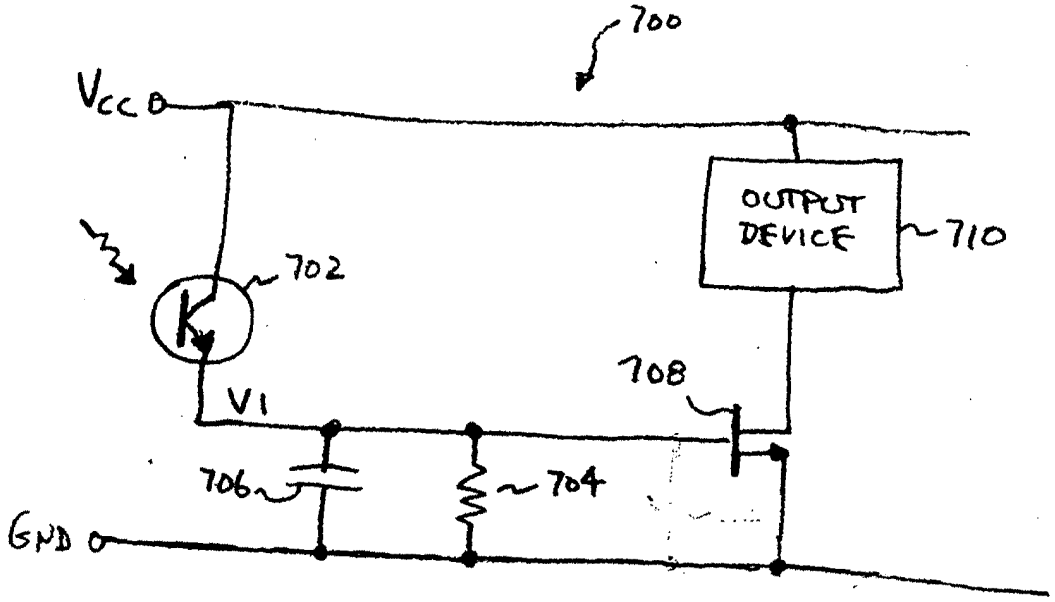
700
Vcc
OUTPUT DEVICE
710
702
708
V1
706
704
GND

FIG. 7A

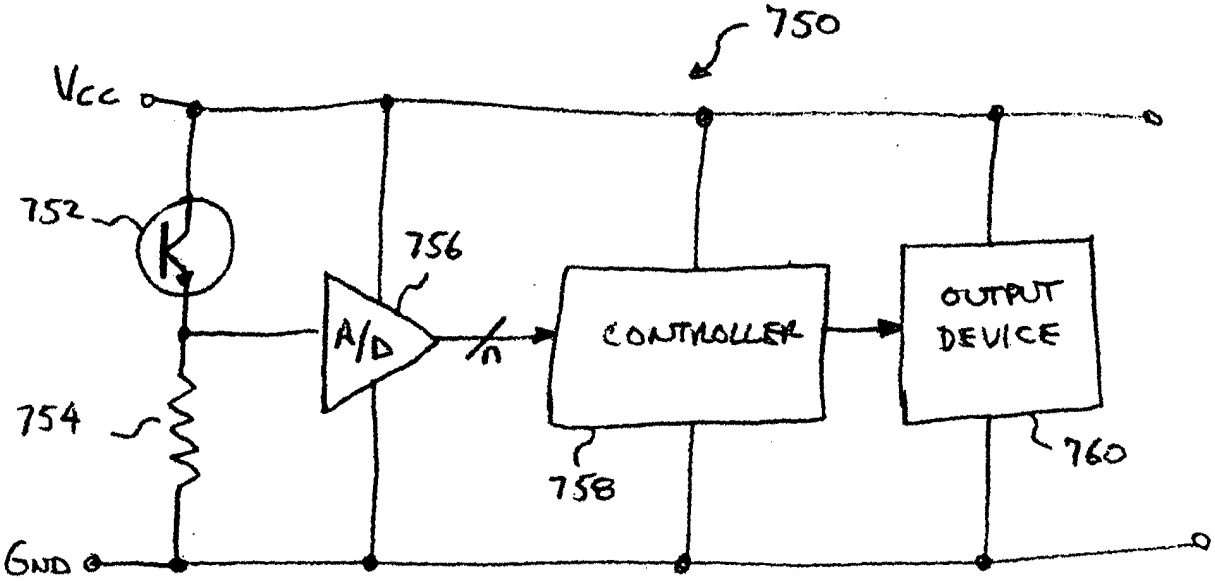
750
Vcc
752
756
A/D
n
CONTROLLER
OUTPUT DEVICE
754
758
760
GND

FIG. 7B

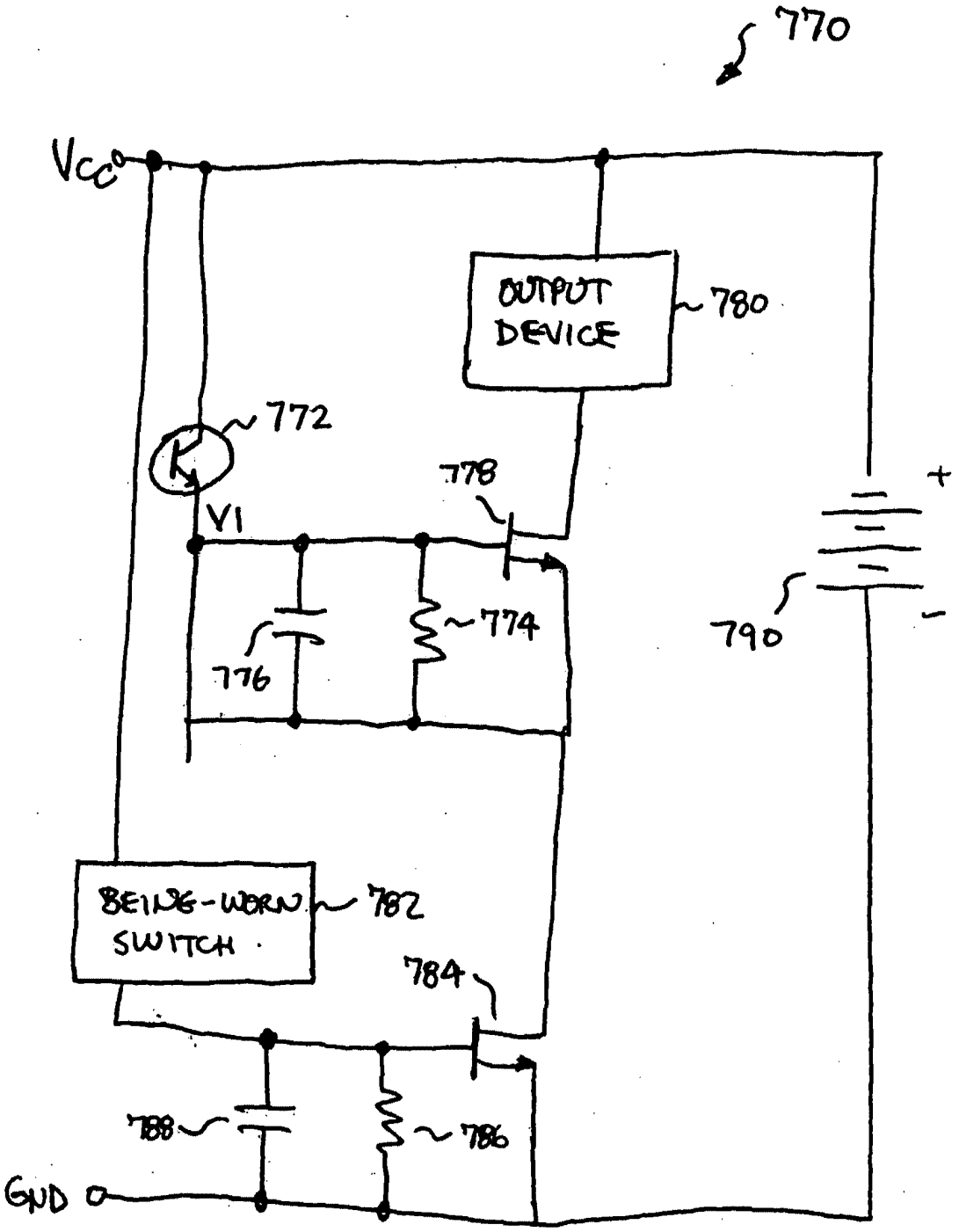
770
Vcc
OUTPUT DEVICE
780
772
778
V1
774
776
790
+
-
BEING-WORN SWITCH
782
784
788
786
GND

FIG. 7C

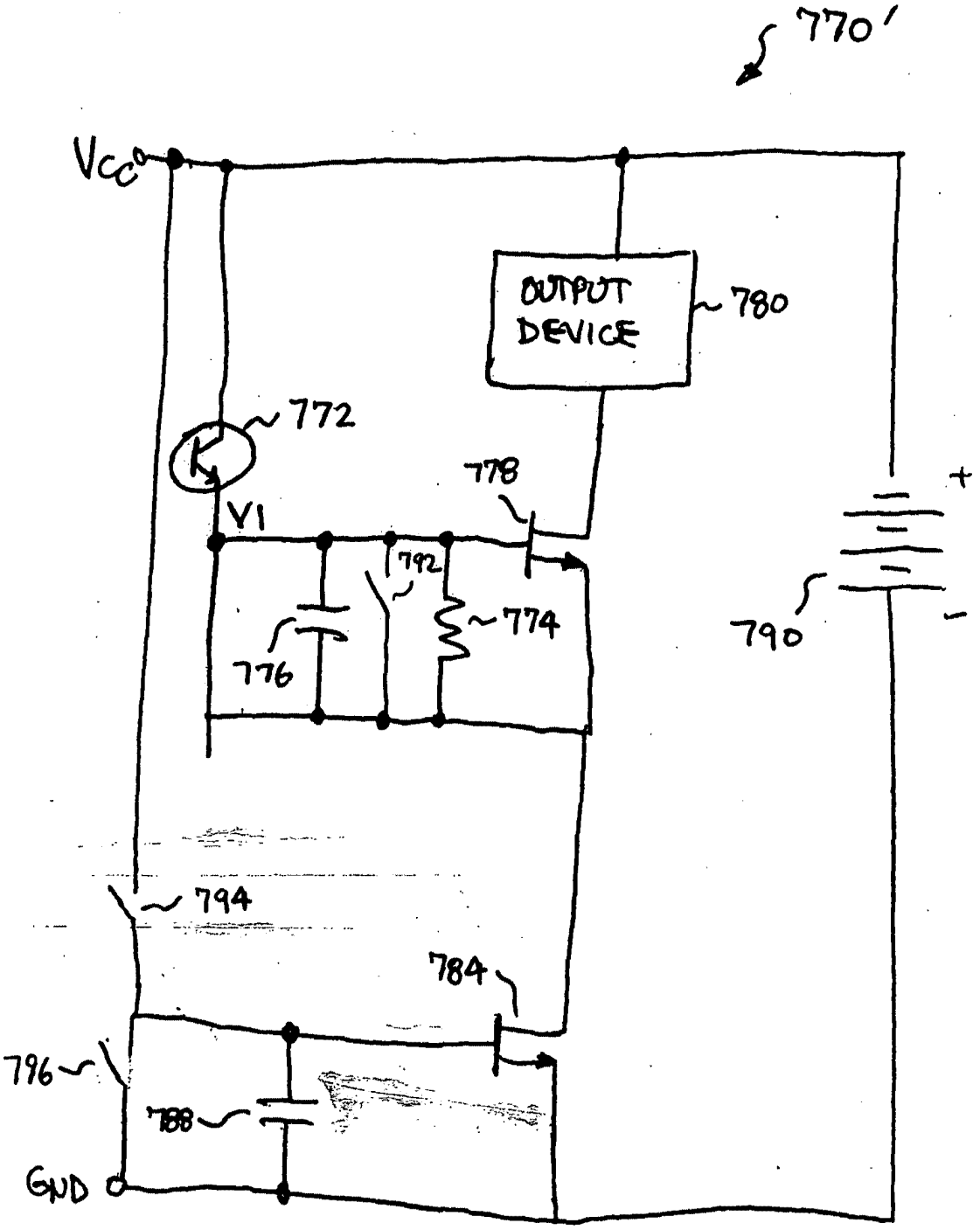
770'
Vcc
OUTPUT DEVICE
780
772
778
V1
792
774
776
790
+
-
794
784
796
788
GND

FIG. 7D

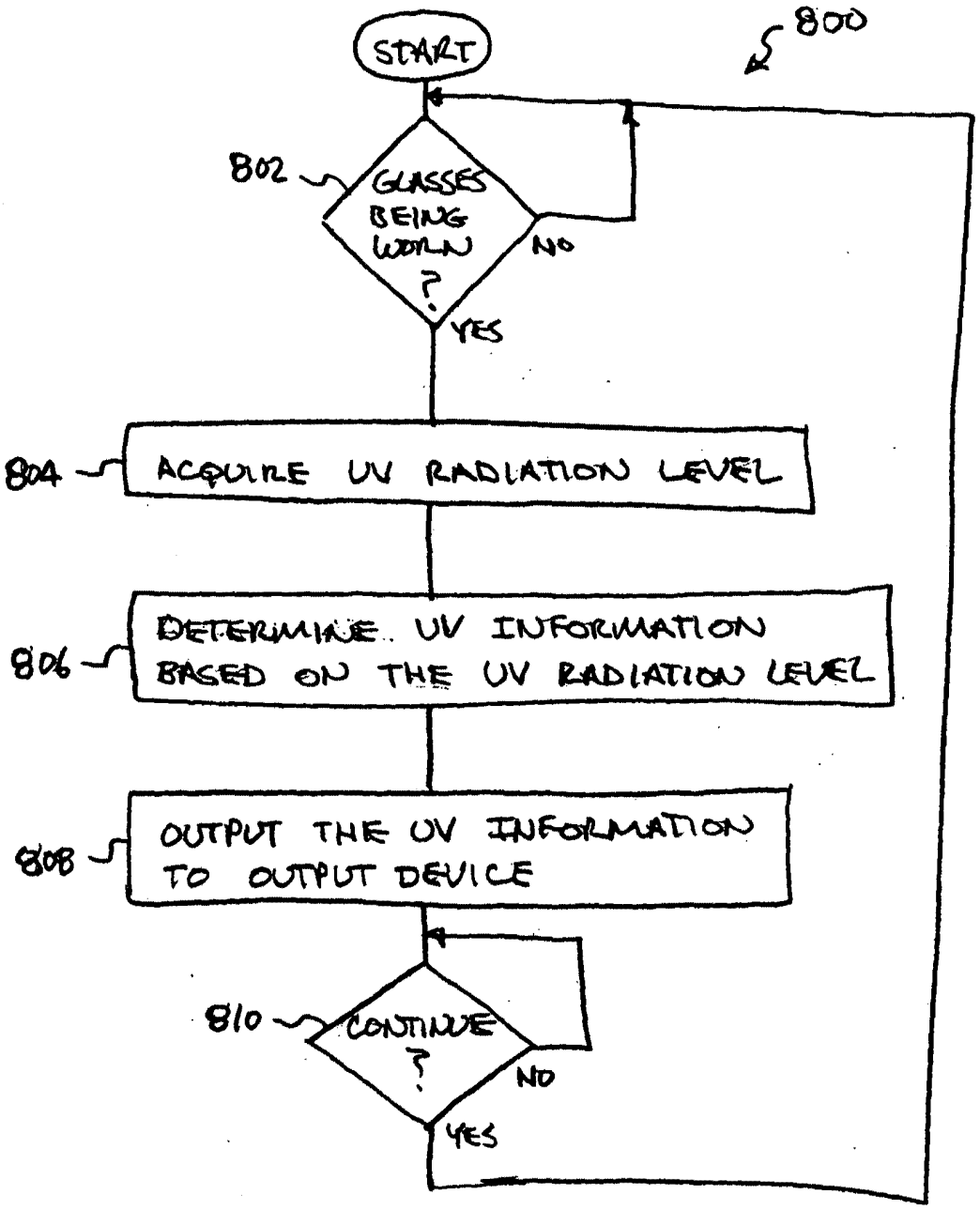
800
START
802
GLASSES BEING WORN ?
NO
YES
804
ACQUIRE UV RADIATION LEVEL
806
DETERMINE UV INFORMATION BASED ON THE UV RADIATION LEVEL
808
OUTPUT THE UV INFORMATION TO OUTPUT DEVICE
810
CONTINUE ?
NO
YES

FIG. 8

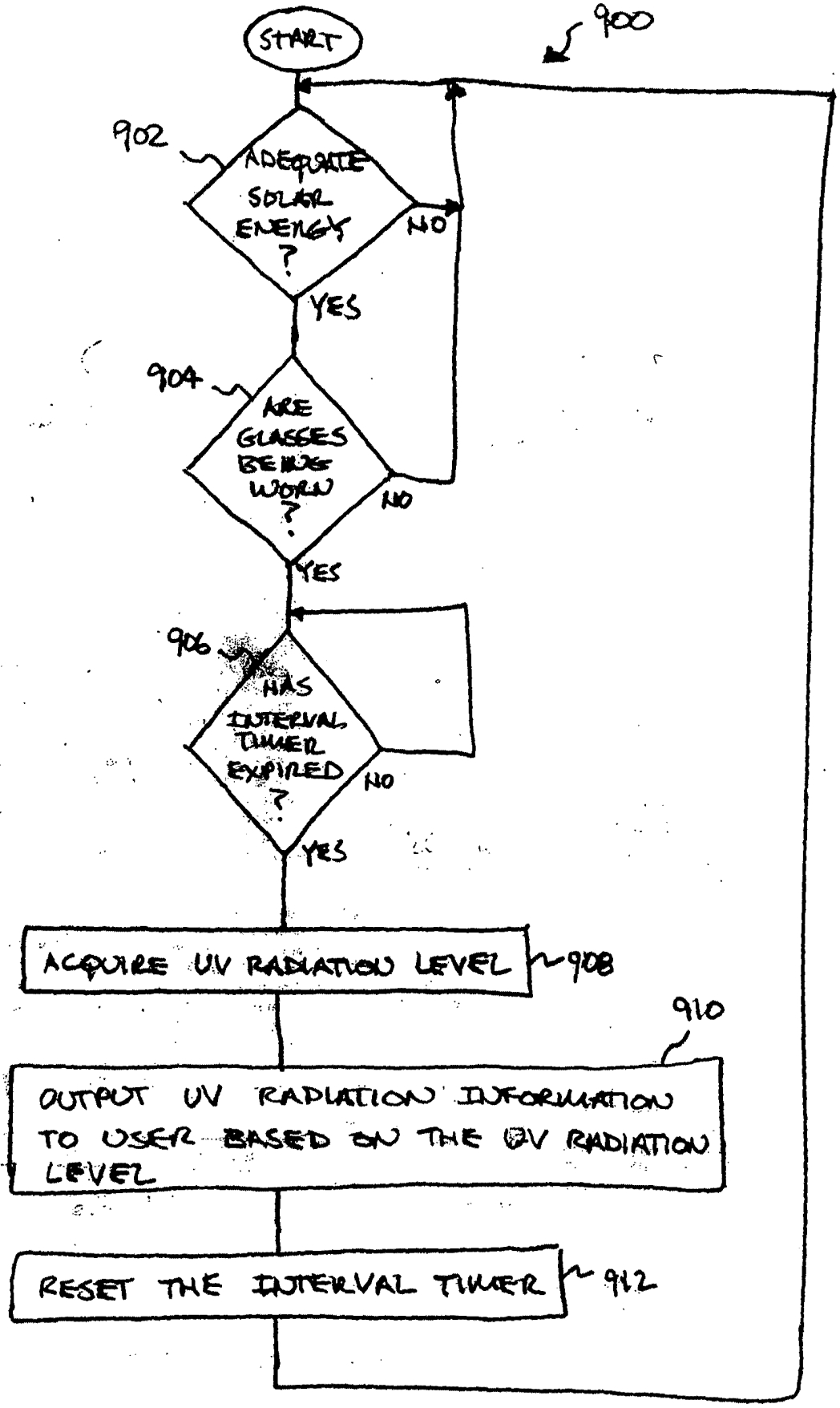
900
START
902
ADEQUATE SOLAR ENERGY ?
NO
YES
904
ARE GLASSES BEING WORN ?
NO
YES
906
HAS INTERVAL TIMER EXPIRED ?
NO
YES
ACQUIRE UV RADIATION LEVEL
908
910
OUTPUT UV RADIATION INFORMATION TO USER BASED ON THE UV RADIATION LEVEL
RESET THE INTERVAL TIMER
912

FIG. 9

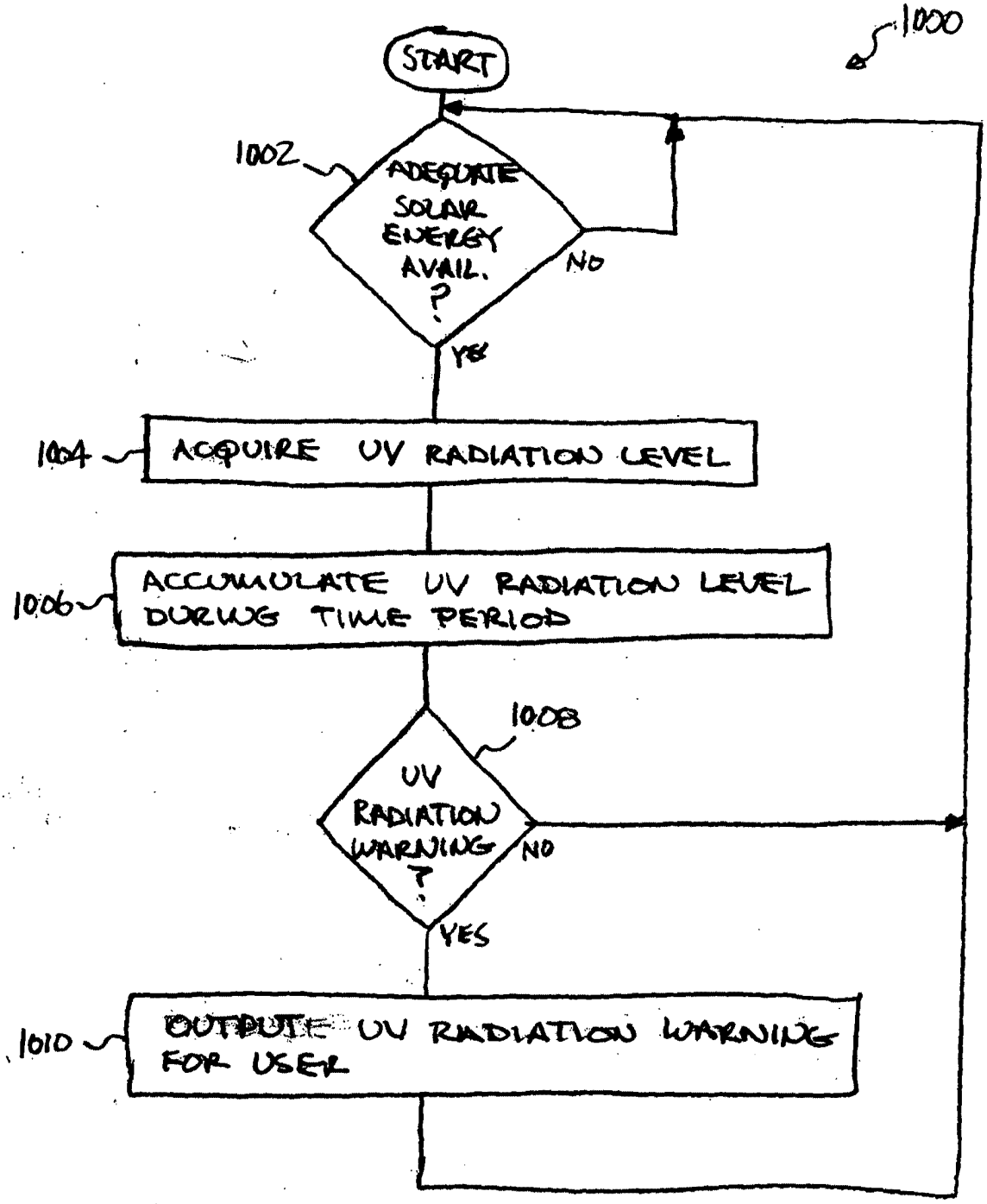
1000
START
1002
ADEQUATE SOLAR ENERGY AVAIL. ?
NO
YES
1004
ACQUIRE UV RADIATION LEVEL
1006
ACCUMULATE UV RADIATION LEVEL DURING TIME PERIOD
1008
UV RADIATION WARNING ?
NO
YES
1010
OUTPUT UV RADIATION WARNING FOR USER

FIG. 10

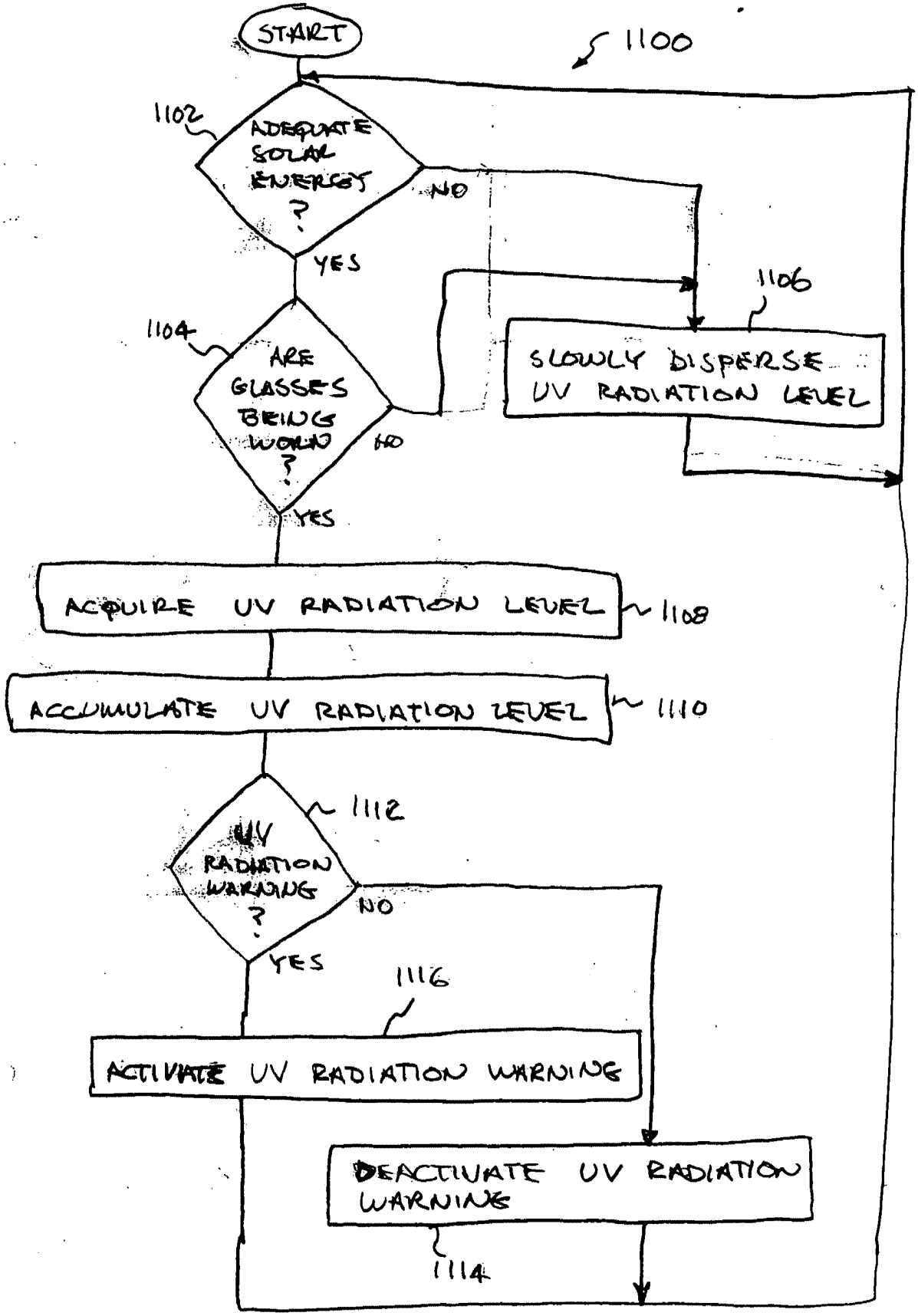
START
1100
1102
ADEQUATE SOLAR ENERGY ?
NO
YES
1104
ARE GLASSES BEING WORN ?
NO
YES
1106
SLOWLY DISPERSE UV RADIATION LEVEL
ACQUIRE UV RADIATION LEVEL
1108
ACCUMULATE UV RADIATION LEVEL
1110
1112
UV RADIATION WARNING ?
NO
YES
1116
ACTIVATE UV RADIATION WARNING
DEACTIVATE UV RADIATION WARNING
1114

FIG. 11

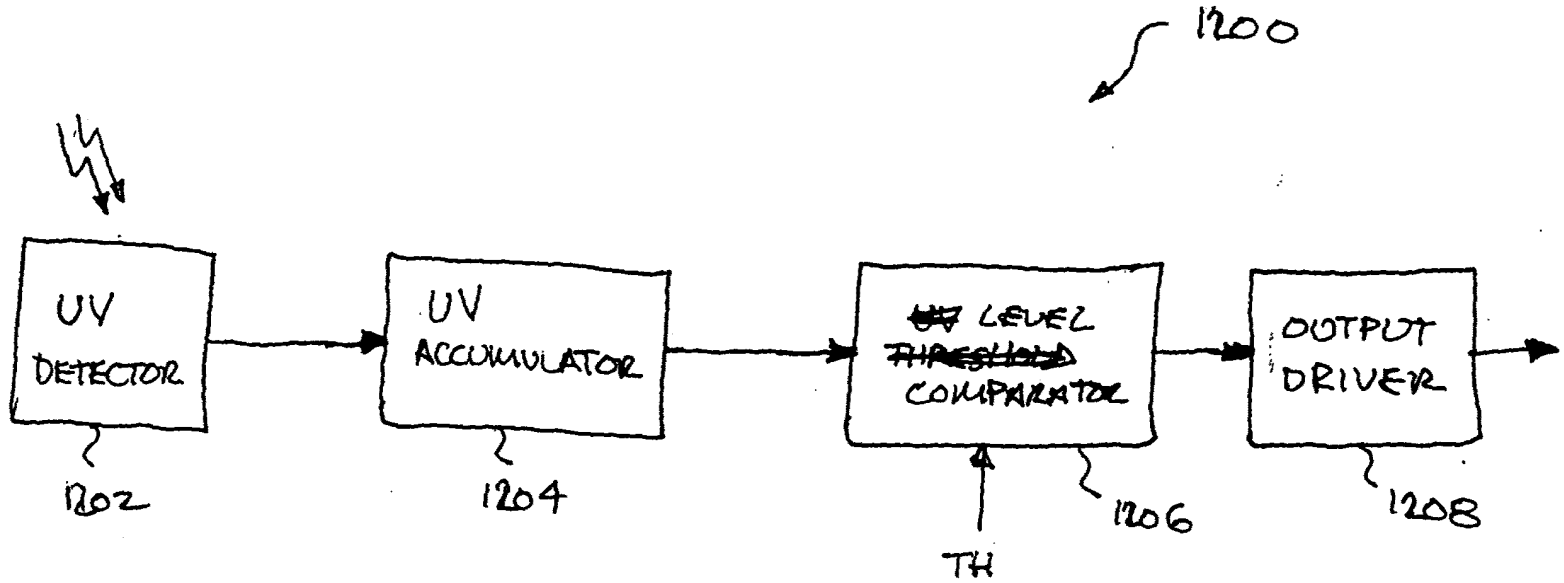
1200
UV DETECTOR
1202
UV ACCUMULATOR
1204
~~UV~~ LEVEL ~~THRESHOLD~~ COMPARATOR
1206
TH
OUTPUT DRIVER
1208

FIG. 12

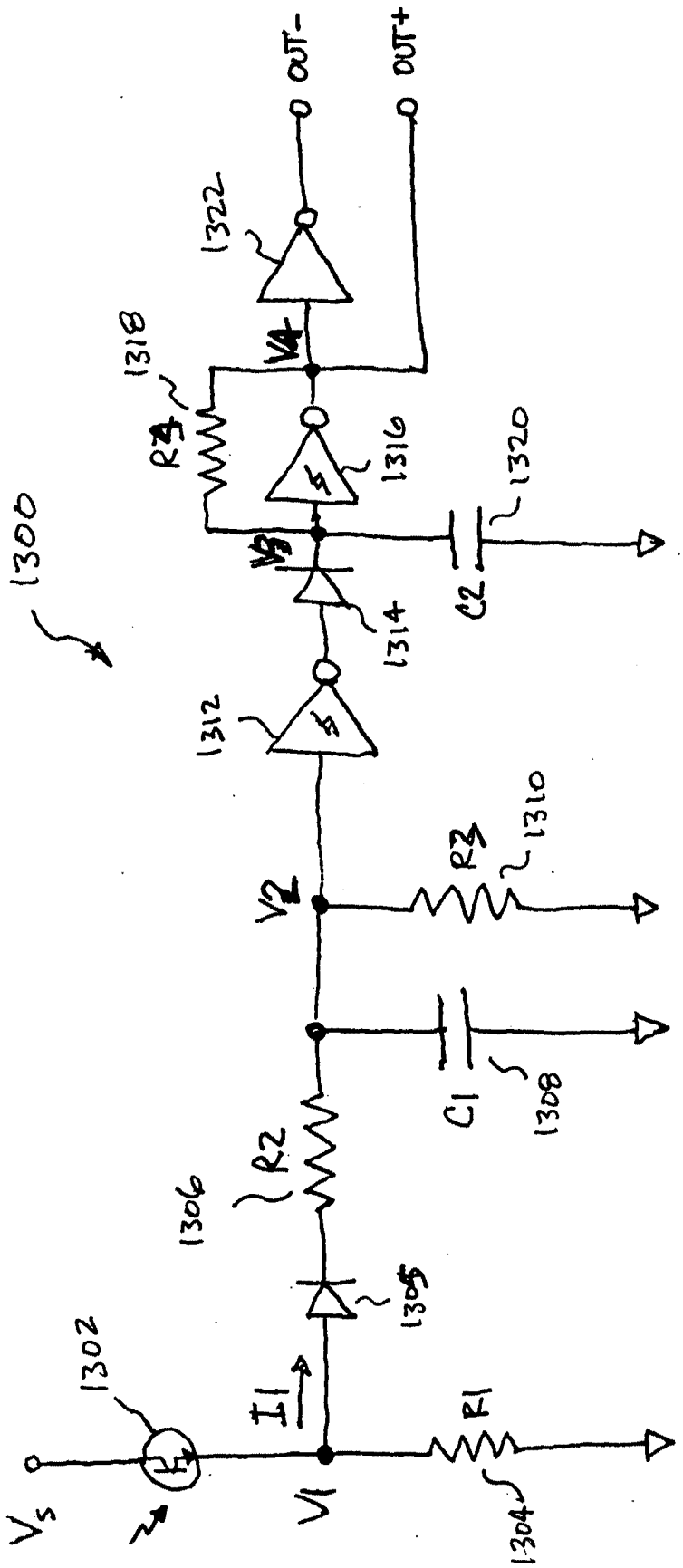
1300
OUT-
OUT+
1322
1318
V4
R4
1316
1320
V3
C2
1314
1312
1310
R3
V2
C1
1308
R2
1306
1305
1302
I1
R1
Vs
V1
1304

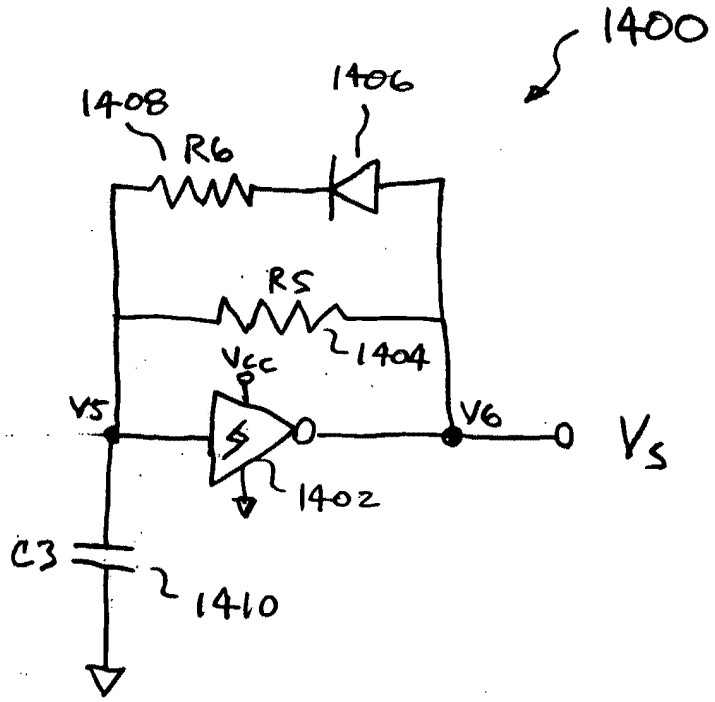


FIG. 14A

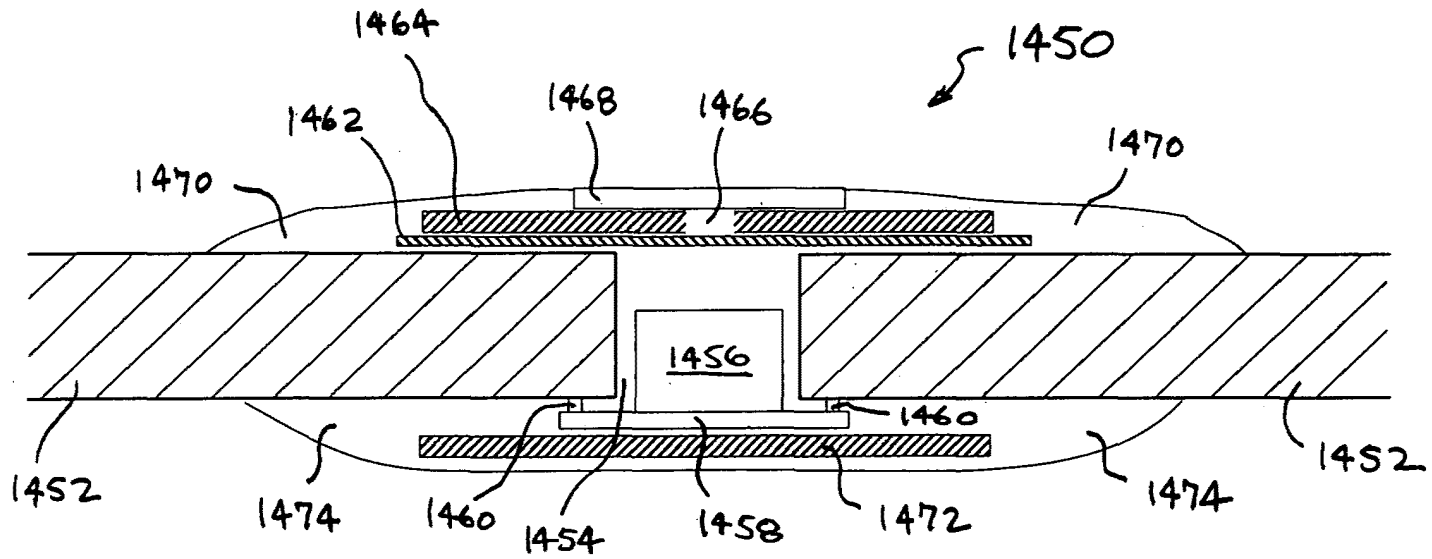
1450
1464
1468
1466
1462
1470
1470
1456
1460
1452
1474
1460
1454
1458
1472
1474
1452

FIG. 14B

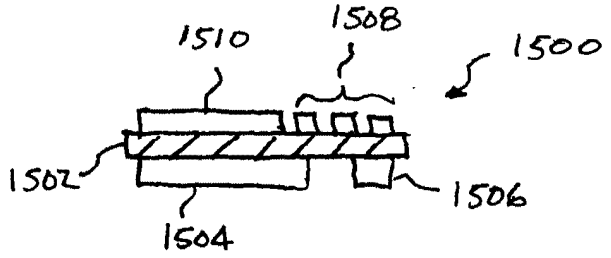


FIG. 15A

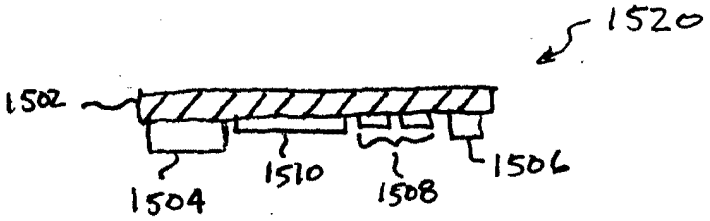


FIG. 15B

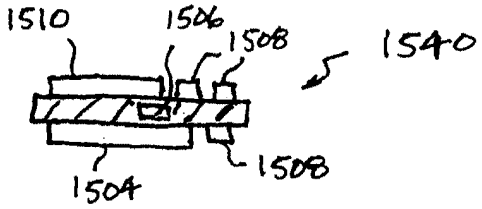


FIG. 15C

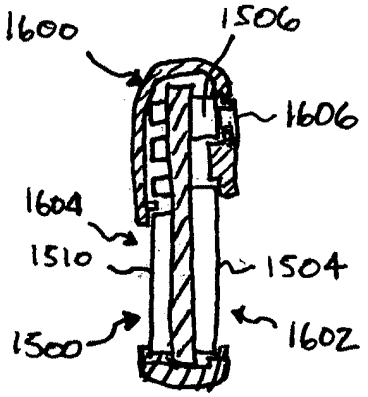


FIG. 16A

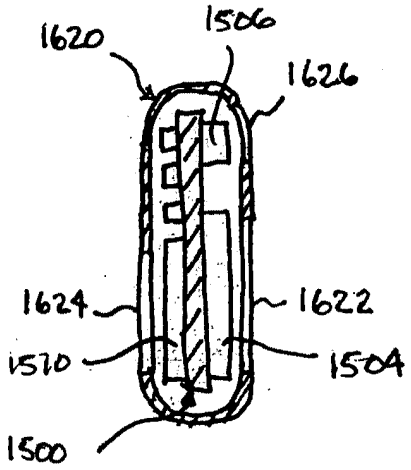


FIG. 16B

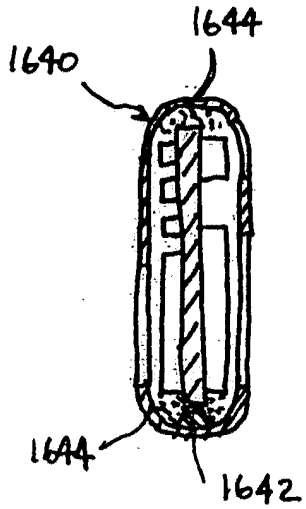


FIG. 16C

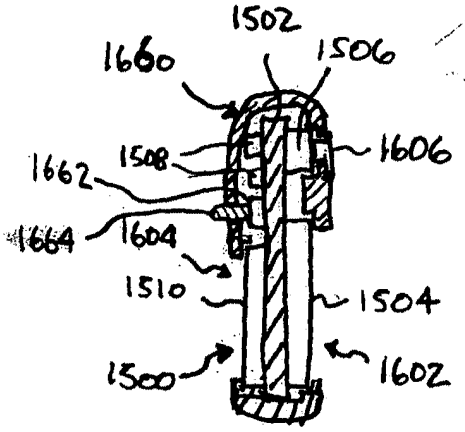


FIG. 16D

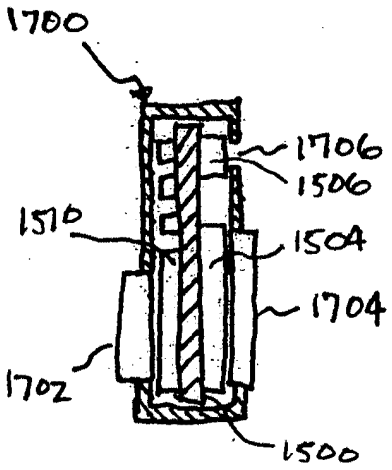


FIG. 17A

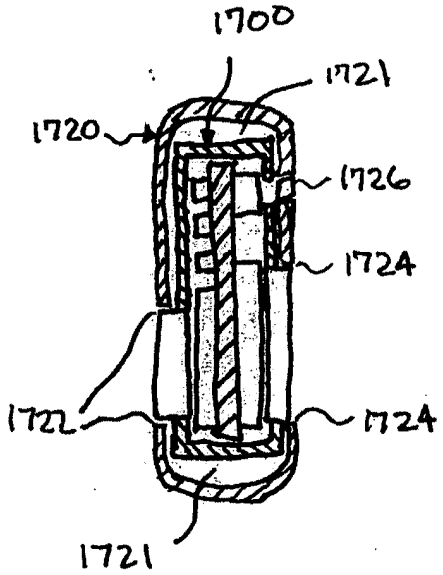


FIG. 17B

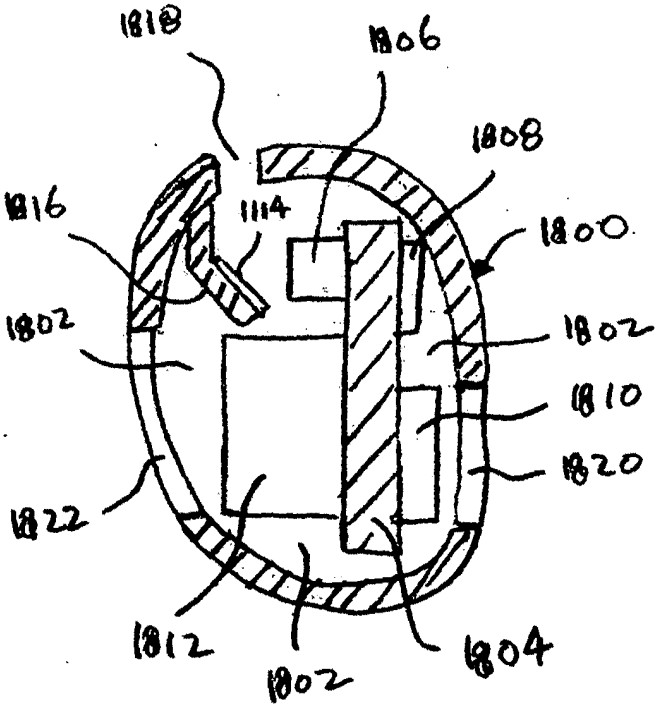
1818
1806
1808
1816
1114
1800
1802
1802
1810
1820
1822
1812
1802
1804

FIG. 18

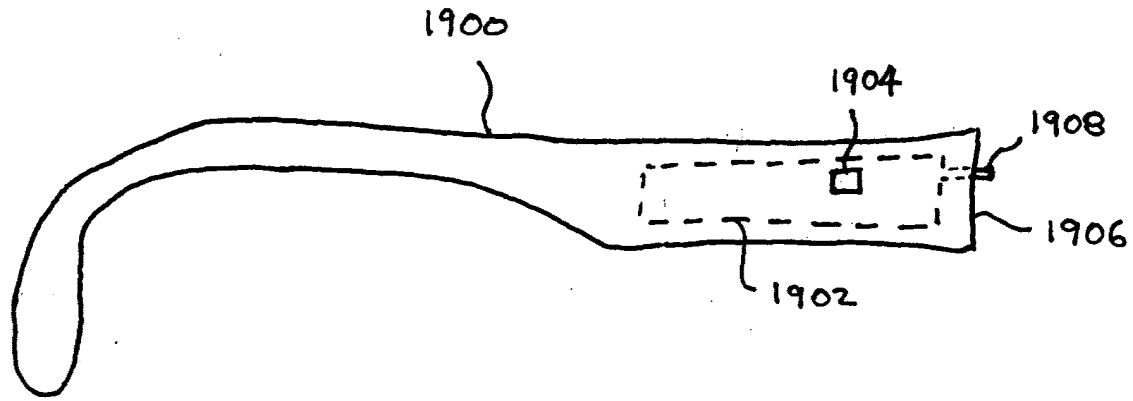


FIG. 19

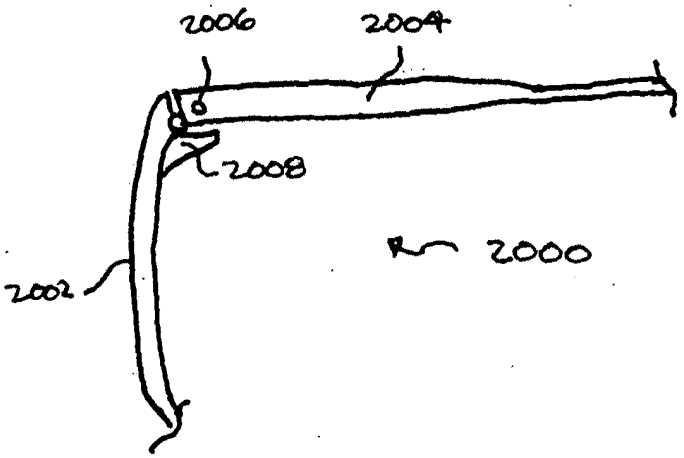


FIG. 20A

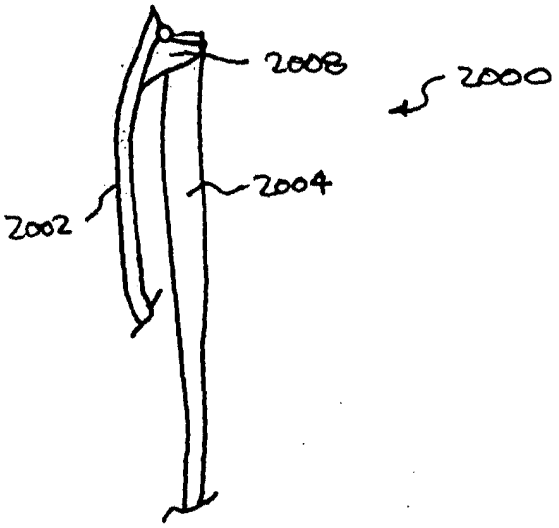


FIG. 20B

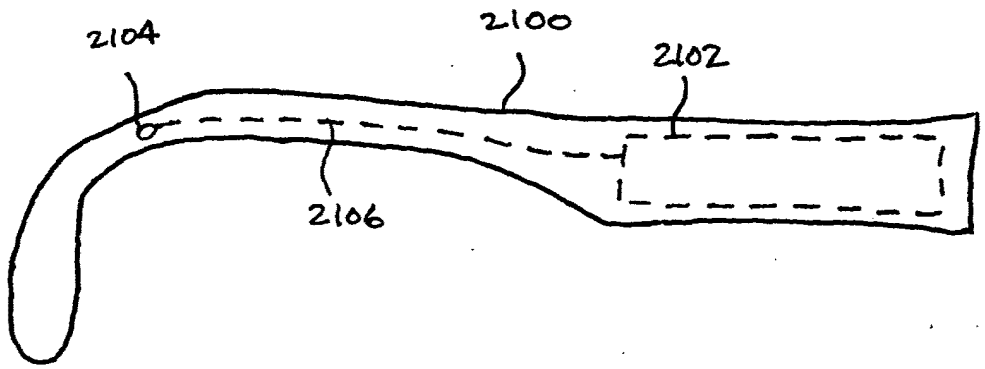


FIG. 21

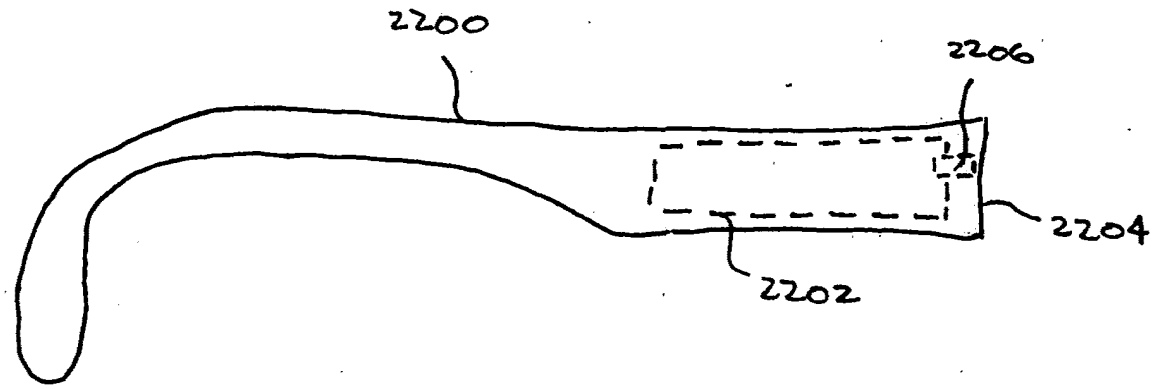


FIG. 22

## C. EYEGLASSES WITH USER INPUT CAPABILITY

SUMMARY OF THE INVENTION

**[0001]** One embodiment of the invention includes a pair of glasses with user input capability. The pair of glasses has a first and a second lens holders for receiving lenses. Each of the lens holders has a first side and a second side. The pair of glasses has a bridge element that couples the first side of the first lens holder to the second side of the second lens holder. The pair of glasses also includes a first temple and a second temple. The first temple is pivotally secured to the second side of the first lens holder through a joint, while the second temple is pivotally secured to the first side of the second lens holder through another joint. The pair of glasses can also include a speaker, which is powered by a power source. In one embodiment, the user input capability is implemented by a switch, which can be used to turn the power source on and off. The pair of glasses can deliver information through the speaker to the person wearing the glasses, and the information is available for a short duration of time.

**[0002]** In another embodiment, each of the temples has a taper profile that is wider when it is closer to its corresponding joint. Each lens holder can also have a shield at least at one of its edges. In one embodiment, the shields are shaped to conform to the profile of the face of the wearer.

**[0003]** The information can be tailored to specific events or locations. The information can be entertaining or for promoting a product or a company. The information can be in different languages depending on the preference of the person. The glasses can be given away, such as for promotional purposes. The information is available for a short duration of time. When the specific event is over, or when the user has moved away from the specific location, there will be no more information available. Or, the power source to run the speaker is not designed to be removed from the glasses. So, when the power source is drained, no more information will be available to the user.

**[0004]** In one embodiment, the speaker is part of a radio, and the information is wirelessly received by the radio. In another embodiment, the speaker is part of a player, with the information previously stored in the glasses.

**[0005]** The invention can be implemented in numerous ways including, a method, system, device, apparatus, and a computer readable medium. Several embodiments of the invention are discussed below.

## BRIEF DESCRIPTION OF THE DRAWINGS

**[0006]** FIG. 1 shows one embodiment of the invention with a speaker in one of the temples of the glasses.

**[0007]** Fig. 2 shows a number of attributes regarding the applications of the glasses according to different embodiments of the invention.

**[0008]** FIG. 3 shows some of the electrical components of a player according to an embodiment of the invention.

**[0009]** Fig. 4 illustrates a number of forces activating a switch according to a number of embodiments of the invention.

**[0010]** Fig. 5 illustrates a number of mechanical forces activating a switch according to a number of embodiments of the invention.

**[0011]** FIG. 6 shows a Hall-effect detector at a joint of a pair of glasses according to an embodiment of the invention.

**[0012]** FIGs. 7A-7C illustrate different embodiments of a quadrature sensor according to the invention.

**[0013]** Same numerals in Figures 1-7C are assigned to similar elements in all the figures. Embodiments of the invention are discussed below with reference to Figures 1-7C. However, those skilled in the art will readily appreciate that the detailed description given herein with respect to these figures is for explanatory purposes as the invention extends beyond these limited embodiments.

DETAILED DESCRIPTION OF THE INVENTION

**[0014]** Fig. 1 shows one embodiment of the present invention. It includes a pair of glasses 10 with a first lens holder 12 and a second lens holder 14. Both lens holders are for receiving lenses. The first lens holder 12 has a first side and a second side. The second lens holder 14 also has a first side and a second side. The pair of glasses has a bridge element 16. The bridge element is coupled to the first side of the first lens holder 12 and the second side of the second lens holder 14. In one embodiment, the lens holders and the bridge element are not separate pieces, but are an integral piece.

**[0015]** The pair of glasses 10 also includes a first temple 16 and a second temple 18. The first temple 16 is pivotally secured to the second side of the first lens holder 12 through a joint 20. And, the second temple 18 is pivotally secured to the first side of the second lens holder 14 through another joint 22. The glasses 10 further include a speaker 24, a power source 26 and a switch 28. The speaker 24 is powered by the power source 26, and the switch 28 is used to turn the speaker 24 on and off. The pair of glasses 10 can deliver information through the speaker 24 to the wearer or user of the glasses 10. In one embodiment, the information is available for a short duration of time. Since the speaker 24 is close to at least one of ears of the wearer of the glasses 10, the information provided to the user can be provided in a relatively private manner.

**[0016]** In different embodiments, the glasses 10 can be a pair of sunglasses, fit-over glasses, or prescription glasses. In a number of embodiments, the frames of the glasses have more surface area than frames with minimal structure, such as those frames with lenses connected together by wires. For example, the temples of the glasses can have a taper profile. Each of the temples is wider or broader when it is close to its corresponding joint. In one embodiment, a wider or broader temple implies that the temple spans across a wider or broader area longitudinally down from the top of the head of the user. FIG. 1 shows an example of such an embodiment.

**[0017]** In another embodiment, there can be a shield at least at one edge of each of the lens holders of the glasses. These shields can wrap around, or better conform to the profile of, the face of the wearer. The shields can be opaque. There can be

transparent or translucent windows on these shields. To illustrate, in fit-over sunglasses, when worn over a pair of prescription glasses, such shields can go over or cover at least a portion of the pair of prescription glasses. Note that in one embodiment, a pair of glasses does not have to include lenses.

**[0018]** Referring back to FIG. 1, it shows one embodiment of the invention where there is a speaker 24 at least partially embedded in one of the temples 18 of the glasses 10. The speaker 24 can be partially embedded in the glasses 10. For example, the mouth of the speaker 24 can be exposed, though sometimes the mouth can have a cover with small holes on it.

**[0019]** In one embodiment, the information is available for a short duration of time. The power source 26, which can be a battery, does not have enough power to run the speaker 24 in its full capacity for a long duration. For example, the battery 26 only has enough power to run the speaker continuously for a short duration of time, which can be less than four hours with the speaker 24 at its highest volume possible when it is turned on by the switch 28 in the glasses 10. The battery can be encapsulated in the glasses 10, such as in one of the temples 18 of the glasses 10. The battery can be a coin battery or a AAA battery, or other types of batteries. In this embodiment, the glasses are designed such that the battery is not easily replaceable by the user. The battery can be inside a temple and the temple can be sealed so that the battery is typically not replaceable without breaking the temple.

**[0020]** Fig. 2 shows a number of attributes regarding the applications of the glasses, such as the glasses shown in Fig. 1, according to different embodiments of the invention.

**[0021]** The information provided by the glasses can be event driven 50. For example, the user is at a football game in a stadium. The information can be related to a star player, such as his statistics, or other interesting information regarding the team. The information can be from an athlete, a coach or an analyst, to the user regarding the game as it is going on. The information can be advertising materials available during the break time of the game. The event is not limited to be an outdoor event. It can be an indoor concert. In such embodiments, the information is available for a short

duration of time and the duration is set by the event 50, which can include some time before the event and some time after the event. When the event is over, the information will not be available.

**[0022]** The information can be location driven 52. For example, the user is in a store, with many products. The products can be services. As the user moves around the store, he looks at different products. In one approach, each product is designated by a number. By entering the specific number into the glasses, such as through a switch, information pertinent to the corresponding product will be available to the user. As another example, the user can be in an exhibit hall or in a museum. As the user strolls in the hall, information of different exhibits is available to him. Or, the user can be walking around a botanical garden, and is given a virtual, unguided tour by the glasses of the different type of plants in the garden. When the user moves away from such locations, the information will not be available.

**[0023]** The user can be at places where he is alone, or he does not know anybody. He might be bored. For example, he can be in a dental office having his teeth cleaned. Or, he can be in a bank waiting for his turn. Different types of information can be available to him. For example, if the bank has a new home loan program, such information is available to him. Again, when the user moves away from such location, the information will not be available.

**[0024]** The information can be for entertaining 54 the user. Or, the information is primarily promotional 56 in nature. The promotion can be related to the event the user is participating, or the promotion can be related to the location, such as the company the user is physically at.

**[0025]** The information can be in different languages 58. For example, glasses with a red dot provide information in English, while glasses with a white dot provide information in Spanish. Or, there can be a switch on the glasses that allows setting the language preferred by the user.

**[0026]** The glasses can be given away 60. They can be sold at a relatively low price 62. Or, the glasses can be for temporarily use, such as the user can borrow or lease 64 it for a short duration of time.

**[0027]** Referring back to Fig. 1, the embodiment 10 includes a speaker 24 that is at least partially embedded into the glasses. There are different approaches to embed an electrical component, such as a speaker, into different types of glasses. A number of approaches are described in section A above, entitled, "EYEGLASSES WITH ELECTRICAL COMPONENTS," which is hereby incorporated by reference.

**[0028]** In one embodiment, the pair of glasses 10 shown in FIG. 1 includes a radio, and the speaker is a part of the radio. All the electronics are at least partially embedded in the glasses. For example, the electronics can be on a printed circuit board, and the board is in one of the temples of the glasses. Information is provided to the user through the radio. The radio can be an AM or a FM receiver. In one embodiment, the receiver is pretuned to the frequencies of the transmitter of the information. Or, before the glasses are distributed, the radio is set to receive signals from a specific frequency band. And the radio does not include an external tuner or switch on the glasses for the user to tune the radio to listen to another frequency band. In another embodiment, the receiver is tunable by a switch on the glasses to one or more frequencies.

**[0029]** The information can be information captured by a microphone, a wireless mike or other pickup device, and transmitted over radio frequency waves to the radio.

**[0030]** As to the transmitted frequencies, typically government agencies, such as the FCC in the United States, regulate the availability of frequency ranges, particularly when the power of transmission is not low. In one embodiment, the transmitted frequencies can be on either side of the standard FM radio bands. They can be within the television VHF frequency range of 50 megahertz to 150 megahertz, or 49 to 88 MHz, or 108 to 220 MHz. Selecting such frequencies can have the advantage of having receiver components more readily available and less expensive. But, the frequencies selected may vary depending on costs, performance and/or FCC or other government agency requirements.

**[0031]** In another embodiment, the transmitted frequencies are in the CB (Citizen Band) radio band.

**[0032]** In yet another embodiment, the transmitted frequencies are FM-sidebands. This would allow the use of FM sideband receivers. Using such sidebands typically would require a lease from radio stations.

**[0033]** Also, the frequencies transmitted could be based on spread spectrum techniques. In other words, though the frequencies are constantly changing, the transmitter and the receiver are in sync. In a number of countries, such embodiments do not require government license.

**[0034]** Information can typically reside within a few MHz. In one embodiment, the radio in the glasses is a narrow-band receiver, with a bandwidth of 3-6 MHz.

**[0035]** In yet another embodiment, the radio can receive signals from one of multiple and proximate AM modulated frequencies. For example, in a museum, information from adjacent artwork can be transmitted based on frequencies centered at the different frequencies. The radio receiver is a broader band AM receiver, which can be a receiver non-tunable by the user. Depending on proximity, the radio will adjust automatically to capture the frequency of the carrier for information regarding the particular artwork and excludes cross-talks from information regarding its immediate adjacent artworks. The design of such a radio is known in the art and will not be further discussed.

**[0036]** Another factor to consider is the power level of the transmitted signals. If the power level of the transmitted signals is low, signals do not travel an excessive distance beyond the antenna. For example, the low power level can be between ¼ to ½ watts. Or, the low power level is not more than 50 milliwatts. If the transmitted power level is low, it is relatively easier to meet government agencies, such as the FCC's, guideline. Cost and complexity of the circuitry are usually reduced also. High power transmission typically requires special government approval.

**[0037]** In one embodiment, the transmission path between the transmitter and the receiver is primarily line of sight.

**[0038]** In yet another embodiment, there can be multiple transmitters. This can then keep transmission power low even if a large or unusually shaped area is to be covered.

The corresponding radio will capture its signals from the transmitters based on proximity.

**[0039]** In one embodiment, the frequency of the radio cannot be tuned at the glasses by the user. The frequencies are fixed upon distribution of the glasses. In another embodiment, the frequencies of interest can be changed. For example, there can be an EPROM in the glasses that can be programmed. Or, one can replace a chip in the glasses to adjust the frequencies. In yet another embodiment, there can be one or more switches at the glasses to change the frequencies.

**[0040]** A number of embodiments have been described where the glasses include a radio to receive broadcast information. In another embodiment, the information to be received is previously programmed or recorded within a memory device. The glasses include a player to play the information stored in the memory device, and the player includes a speaker. The player is at least partially embedded in the glasses. In one embodiment, the glasses also include the memory device with the recorded information.

**[0041]** The memory can be on a printed-circuit board and, for example, can store up to 256 MB. The memory can be a built-in or removable flash memory. In one embodiment, the glasses include one or more connectors. The memory embedded in the glasses can be coupled to a device external to the glasses through the one or more connectors. As an example, a 256 MB flash memory is in one of the temples of a pair of glasses, and there is a USB connector at the end of that temple (close to the ear) to couple to an external device or instrument.

**[0042]** With the embedded storage medium, the glasses can upload information in the memory to or download information into the memory from an external device, such as a computer. A user can plug the glasses into the computer through a connector, either directly, or indirectly, with, for example, an intermediate wire in between.

**[0043]** In yet another embodiment, the memory device is external to the glasses. The memory device is coupled to the glasses through a connector at the glasses.

**[0044]** FIG. 3 shows some of the electrical components for a player 100 in a glasses according to an embodiment of the invention. The player includes a speaker 102, a

data bus 104 to facilitate data transfer among, for example, a processor 106, a storage device 108, and a coder/decoder (CODEC) 110. The processor 106, which can be a microprocessor or controller, controls the operation of the player 100. The storage device 108 stores the information, which can be different types of appropriately-formatted media data. In one example, the information is digitally encoded audio signals. The storage device 108 can include a number of separate storage elements. For example, the device can be a flash memory device, or a minidisk device, and a cache, which can improve the access time and reduce power consumption of the storage device 108. The storage device 108 typically also includes a Read-Only Memory (ROM), which stores programs, utilities or processes to be executed in a non-volatile manner. The player 100 can also include a RAM, such as for the cache.

**[0045]** Once a piece of information is selected to be played, the processor 106 would supply the piece of information to the CODEC 110, which decompresses the data asset and produces analog output signals for the speaker 102. In one embodiment, the bus 104 is also coupled to an input/output device 112, which would allow information to be downloaded from an instrument to the glasses.

**[0046]** There are different approaches to identify a piece of information to be played. In one embodiment, different pieces of information in the storage device 108 can be categorized, and the categorization can be hierarchical, with multiple levels in the hierarchy. To illustrate, assume that there are three levels. The top level can be the name of the football team; the second level can be the names of the players on the team, and the third level can be scoring statistics or other attributes of the players. The entries, such as the name of the players, can be abbreviated. There can be a control knob or switch to allow the user to scroll down entries in a level. By pushing the knob, the user selects an entry, which can lead the user to the next level. There can be an entry for moving up a level also. In one embodiment, once an entry is selected, the identity of that entry will be announced. For example, a selected entry is about the statistics of Joe Smith. Once that entry is selected, the speaker will state, "Joe Smith statistics". If that is the one the user wants, the user can signal his preference by, for example, pushing a switch.

**[0047]** With the speaker relatively close to at least one ear of the user, the volume of the speaker does not have to be very high. In one embodiment, the volume of the speaker is limited, such as the maximum sound level is not more than 60 dB. If the glasses are powered by a battery, such a limit would extend the lifetime of the battery. Such a limit can also reduce the chance of the speaker generating audio signals that might disturb people in the vicinity of the user. This, in turn, helps to provide information to the user in a relatively private manner.

**[0048]** In one embodiment, the glasses are powered by a battery. To extend its lifetime, the glasses include a timer. For example, if the glasses have a radio, after the radio is turned on for a preset amount of time, the timer will turn the radio off automatically. In another embodiment, the glasses include a speaker and the timer would turn the speaker off after the speaker has been turned on for a preset amount of time. The preset time can be determined by the timer.

**[0049]** As explained, in a number of embodiments, the glasses include a switch, or a switch is at least partially embedded in the glasses. For example, the switch can be used to turn the speaker on, or to tune the frequency of a radio. If the glasses have two speakers, such as one on each of the temples, there can be two switches, one on each temple to control the corresponding speaker. The two speakers can be for generating stereo audio signals for the user.

**[0050]** The switch in the glasses can have different attributes. It can be activated by different type of forces, including mechanical, radiation, magnetic, electrical, and temperature. The switch can also be activated remotely by a remote device. The switch can be based on one or more detectors. The switch can have different degrees or ranges of control, such as binary, multiple discrete steps or incremental control. The switch can be placed at different position on the glasses, such as on the side or top surface of the temple or at the joint. The control can take perception into consideration, such as based on texture, height and lateral position of multiple switches.

**[0051]** Fig. 4 illustrates a number of forces 150 activating the switch according to different embodiments of the invention. They can be based on, for example, mechanical 152, radiation 154, magnetic 156, electrical 158, and temperature 160.

**[0052]** FIG. 5 illustrates a number of mechanical forces 152 activating the switch according to different embodiments of the invention. The mechanical switch or sensor can be a conductive-elastomer switch 202, a membrane switch 204, a dome switch 206, a relatively simple wire switch 208, and a roller switch 210, such as a switch including a wheel. Another type of mechanical force can be based on stress 210, such as a switch based on piezoelectric force or a piezoelectric device.

**[0053]** In yet another embodiment, the mechanical switch is made so that the electrical circuitry in the glasses can be activated but not deactivated by the user. In other words, once activated, the switch is designed not to be deactivated by the user, and the circuit will remain on till the power source inside the glasses is depleted. One approach to implement such a switch is based on a piece of insulating material 216 between a terminal of, for example, a battery and its contact with the circuit embedded in the glasses. When the battery is installed, at least one of its terminals is separated from its circuit contact. There can be a thin, flexible, insulating material, 216, such as a ribbon, positioned between the terminal and the contact. Though the circuit is embedded in the glasses, the insulating material 216 extends outwardly from inside the glasses through a hole, such as a small hole, in the side wall of, for example, a temple of the glasses. In one embodiment, the hole or slot is located above or below the terminal and the contact, or the hole is not directly inline with the terminal and the contact. By pulling the insulating material out from the glasses, the terminal will establish electrical connection with the contact, activating the circuit and turning the speaker on.

**[0054]** In another embodiment of a switch based on mechanical force 154, the mechanical force is the force that is used to insert 218 a battery into the glasses. Once the battery is inserted, the speaker in the glasses will be activated. The speaker will remain on until the battery is removed, or until the power in the battery is drained.

**[0055]** The switch can be activated by radiation forces 154, or energies in a type of radiation, according to a number of embodiments of the invention. The radiation 154 can be in the optical, or infrared or ultraviolet range. For example, the switch includes a photodiode or photo sensor in the glasses, and there is an opening above the photodiode. In one embodiment, the diode is activated by light getting to the diode

through the opening. In another embodiment, the circuit is activated if the opening is covered, such as by your finger, to prevent light from getting to the diode.

**[0056]** The switch can be activated by magnetic forces 156. For example, there can be a magnetic sensor or a Hall effect detector inside a temple at a joint of a pair of glasses. FIG. 6 shows a section of a pair of glasses 250 with such a detector 254. The detector 254 is electrically connected to a printed circuit board 255. When the temple 252 is in its extended position, as when the glasses 250 are ready to be worn, the detector 254 will be directly adjacent to a magnet 256 inside a lens holder 258 at the corresponding joint 260. The magnet 256 would activate the Hall effect detector 254. In another embodiment, a magnetic switch is activated based on changing the inductance of a coil. For example, the switch includes a metallic rod that can be positioned in or out of a coil. The switch's range of control is based on the position of the rod with respect to the coil.

**[0057]** The switch can be activated depending on electrical forces 158. In one embodiment, the electrical force depends on capacitive effect. By changing the capacitance, the switch is turned on and off. For example, the capacitance is changed by placing one's finger over a metallic pad. In another example, by changing the amount of overlap between two metallic sheets that are not in contact, the capacitance between the two metallic sheets will change. This then changes the range of control of the switch.

**[0058]** In another embodiment, the electrical force 158 is based on resistive effect. For example, the switch is made up of a slide or a rotary potentiometer. By changing the amount of coupling, the amount of resistance is changed to reflect the range of control of the switch.

**[0059]** In one embodiment, the switch's activation can depend on temperature 160. For example, the switch includes a temperature sensor. When the temperature reaches a certain point, the switch is activated.

**[0060]** In yet another embodiment, the switch is controlled by a remote controller. For example, the glasses include an infrared detector. The remote controller can generate infrared radiation. By aiming the controller at the detector, the infrared radiation can

activate the infrared detector and the switch is activated. Or, if the user moves into the vicinity of a corresponding infrared transmitter, circuits in the glasses would be activated.

**[0061]** The switch can include one or more previously-described sensor or detector of different types of forces. For example, the switch uses two photo sensors. One sensor is exposed to light on the outside surface of the temple and the other is exposed to light on the inside surface of the temple, such as close to the ear. Based on their differential output, the switch is activated. As another example, there are two temperature sensors in the glasses. One is located close to a joint and the other is at the temple close to the ear. Again, the switching action depends on their differential outputs. In yet another embodiment, the glasses include more than one type of switches. There can be one type of switch, such as a mechanical switch, acting as an on/off switch, and another, such as a switch using electrical forces, as an incremental switch to change frequency.

**[0062]** As described, in a number of embodiments, the switch can provide different degrees or ranges of control. In one embodiment, there are two degrees of control, such as in an on/off switch. In another embodiment, there can be multiple discrete degrees, steps or positions. For example, the switch is a roller with discrete notches to indicate different discrete positions. Or, there can be two mechanical switches, placed side-by-side. Pushing one switch will increment one step, and pushing the other will decrement one step.

**[0063]** In yet another embodiment, the change from one degree to the next is gradual and not noticeably discrete. This can be achieved with 2 sensors arranged in quadrature. FIGs. 7A-C show examples of different embodiments of such a switch based on 2 photodiodes or photo detectors.

**[0064]** FIG. 7A shows an embodiment 300 with a wheel 302 having clear, 304, 306 and 308, intertwined with black strips, 310, 312 and 314, and two diodes, 316 and 318. Most of the wheel 302 and the two diodes, after incorporated into the temple 320, are covered by a piece of material 322. The two diodes, 316 and 318, are exposed to the ambient through a clear window, 324. A part of the wheel 302 is extended out of the temple 320, allowing the wheel 302 to be turned about its axis 326. The wheel 302 can

have teeth for turning purposes. As the wheel 302 rotates about the axis 326, based on the differential outputs from the diodes, the direction of movement of the wheel 302—clockwise or counterclockwise—is determined. For example, if the wheel is rotated clockwise, the top diode 316 senses light before the bottom 318 senses light. On the other hand, if the wheel 302 is rotated counterclockwise, the bottom diode 318 senses light before the top 316. Based on the differential output from the two diodes, one would be able to tell if the wheel is being turned clockwise or counterclockwise. Clockwise can denote increase and counterclockwise can denote decrease. This embodiment can be used, for example, to change frequency. By turning the roller 302 clockwise, the frequency of the radio goes up. And, by turning it counter-clockwise, the frequency goes down.

**[0065]** FIG. 7B shows an embodiment 350 with a wheel 352 having black 354 and reflecting 356 strips, two photodiodes, 358 and 360, and a LED 362. Again, most of the wheel, the two diodes and the LED are covered by a sheet of material 364. If a reflecting strip 356, instead of a black strip 354, goes over a diode, more light from the LED will be reflected back and received by the diode. If a black strip 354 goes over a diode, output from the diode will be significantly reduced. Again based on the differential outputs from the diodes, the direction of rotation can be determined, which, in turn, can be used to indicate incrementing or decrementing outputs.

**[0066]** FIG. 7C shows an embodiment 400 again using two photodiodes, 402 and 404, but without a wheel. The two diodes, 402 and 404, are exposed to ambient light unless they are covered. In this embodiment, whether the finger 406 or another object is moving from the first diode 402 to the second diode 404, or from the second diode 404 to the first diode 402 can be determined based on the differential output from the diodes. For example, if the finger 406 goes from the first 402 to the second 404, the differential output (the first – the second) would go from negative to positive. On the other hand, if the finger goes from the second to the first, the output will go from positive to negative. The differential output thus can show the direction of movement of the finger. One can then assign forward movement (from the first 402 to the second

404) as increment, and backward movement (from the second 402 to the first 402) as decrement.

**[0067]** A switch can be placed at different location on a pair of glasses. In one embodiment, the switch is positioned on one of the side surfaces of one of the temples, such as the side that is not facing the face of the user when the glasses are worn. In another embodiment, the switch is positioned on a top surface of one of the temples. The switch 28 shown in FIG. 1 falls under this category. In yet another embodiment, the switch is positioned at one of the joints or hinges of the glasses. For example, there is a mechanical switch at a joint. If the corresponding temple is extended, as in the position when the glasses are worn, the switch will be pressed, which can indicate that the switch has been activated.

**[0068]** In one embodiment, the user can be using a switch when the glasses are worn. Depending on the position and the type of switch, the user may not be able to see the switch when he is manipulating it. In one embodiment, the design of the switch takes into consideration perception. To illustrate, there are two mechanical switches on the glasses. The top surfaces of the two switches have different texture. One switch has a smooth surface and the other has a rough surface. Pushing the smooth surface implies incrementing one step and pushing the rough surface implies decrementing one step. This type of perception design is based on tactile effect. In another example, the heights of the two switches are different. The taller switch is for one effect and the shorter is for another. In yet another embodiment, the lateral position of the two switches has significance. For example, the two mechanical switches are on the top surface or edge of a temple. By pushing the switch closer to the lens holder, the volume of the speaker in the glasses goes up; and by pushing the switch further away from the lens holder, the volume of the speaker goes down. In another example, the two switches are under the two ends of a piece of materials, which can be plastic. Rocking the plastic piece forward is an increment motion, and rocking the plastic piece backwards is a decrement motion.

**[0069]** A number of embodiments have been described where information is available only for a short duration of time. In one embodiment, the information is available for a

longer duration of time. For example, after the short duration of time, the battery in the glasses is drained. In order to continue on running the electronics inside the glasses to get the information, the user can replace the battery in the glasses with a new battery. In this embodiment, the glasses are designed so that the battery is replaceable by the user. Or, in another embodiment, the battery is rechargeable through a connector at the glasses.

**[0070]** A number of embodiments have been described regarding the glasses with a speaker for providing information to the user. In one embodiment, the glasses also include one or more light emitting diodes. The LEDs can be for entertaining purposes. For example, the information provided to the user is music. If the audio signals received are beyond a certain threshold, one or more of the LEDs will be activated. The activation of the one or more LEDs can then be synchronized to the sound of the speaker.

**[0071]** One embodiment of the glasses includes a specially-designed surface texture, such as on the outside surface of a temple of the glasses. By scratching the surface texture, depending on its design, one can generate specific audio tones.

**[0072]** A number of embodiments have been described regarding electrical components in a temple of a pair of glasses. All of the electronic components can be self-contained inside the temple of the glasses. The components can be coupled to a printed circuit board. In other embodiments, some of the components are embedded fully or partially in other areas of the glasses, such as the lens holders or the bridge of the glasses. Or, one or more electrical components can be in a shield of the glasses.

**[0073]** The various embodiments, implementations and features of the invention noted above can be combined in various ways or used separately. Those skilled in the art will understand from the description that the invention can be equally applied to or used in other various different settings with respect to various combinations, embodiments, implementations or features provided in the description herein.

**[0074]** Numerous specific details are set forth in order to provide a thorough understanding of the present invention. However, it will become obvious to those skilled in the art that the invention may be practiced without these specific details. The

description and representation herein are the common meanings used by those experienced or skilled in the art to most effectively convey the substance of their work to others skilled in the art. In other instances, well-known methods, procedures, components, and circuitry have not been described in detail to avoid unnecessarily obscuring aspects of the present invention.

**[0075]** Also, in this specification, reference to "one embodiment" or "an embodiment" means that a particular feature, structure, or characteristic described in connection with the embodiment can be included in at least one embodiment of the invention. The appearances of the phrase "in one embodiment" in various places in the specification are not necessarily all referring to the same embodiment, nor are separate or alternative embodiments mutually exclusive of other embodiments. Further, the order of blocks in process flowcharts or diagrams representing one or more embodiments of the invention do not inherently indicate any particular order nor imply any limitations in the invention.

**[0076]** Other embodiments of the invention will be apparent to those skilled in the art from a consideration of this specification or practice of the invention disclosed herein. It is intended that the specification and examples be considered as exemplary only, with the true scope and spirit of the invention being indicated by the following claims.

**[0077]** Other embodiments of the invention will be apparent to those skilled in the art from a consideration of this specification or practice of the invention disclosed herein. It is intended that the specification and examples be considered as exemplary only, with the true scope and spirit of the invention being indicated by the following claims.

CLAIMS

1. A pair of glasses comprising:

a first lens holder for receiving lenses, the first lens holder having a first side and a second side;

a second lens holder for receiving lenses, the second lens holder having a first side and a second side;

a bridge element coupling the first side of the first lens holder to the second side of the second lens holder;

a first temple pivotally secured to the second side of the first lens holder through a first joint;

a second temple pivotally secured to the first side of the second lens holder through a second joint;

a speaker at least partially embedded in the glasses, with the speaker powered by a power source; and

a switch that can turn the speaker on and off,

wherein the pair of glasses can deliver information through the speaker to the person wearing the glasses, and

wherein the information is available to the person for a short duration of time.

2. A pair of glasses as recited in claim 1, wherein the glasses are a pair of sunglasses.

3. A pair of glasses as recited in claim 1,

wherein the temples have a taper profile, and

wherein for each temple, the taper profile is wider when it is closer to its corresponding joint.

4. A pair of glasses as recited in claim 1, wherein at least at one edge of each of the lens holders, there is a shield.

5. A pair of glasses as recited in claim 1, wherein the glasses is a pair of fit-over glasses.

6. A pair of glasses as recited in claim 1, wherein the power source has enough power to power the speaker continuously for the short duration of time.

7. A pair of glasses as recited in claim 1,
wherein the person is at an event, and
wherein the information delivered is related to the event.

8. A pair of glasses as recited in claim 1,
wherein the person is at a location, and
wherein the information delivered is related to the location.

9. A pair of glasses as recited in claim 4,
wherein the person is inside a store, which has a plurality of products, and
wherein the information delivered is related to the products.

10. A pair of glasses as recited in claim 1, wherein the information can be in a plurality of languages.

11. A pair of glasses as recited in claim 6, wherein the user can select the language with a switch at the glasses.

12. A pair of glasses as recited in claim 1, wherein the glasses are given away free at a promotional event.

13. A pair of glasses as recited in claim 1, wherein the speaker is part of a radio, which is at least partially embedded in the pair of glasses.

14. A pair of glasses as recited in claim 13, wherein the radio receives signals from a set of frequencies and wherein the glasses does not include a switch to allow the person to change the radio to receive signals from another set of frequencies.

15. A pair of glasses as recited in claim 13, wherein the radio is designed to receive signals on either side of the standard FM radio bands.

16. A pair of glasses as recited in claim 13, wherein the radio is designed to receive signals in the CB radio band.

17. A pair of glasses as recited in claim 13, wherein the radio is designed to receive signals in the FM-sidebands.

18. A pair of glasses as recited in claim 13, wherein the radio is designed to receive signals based on spread spectrum techniques.

19. A pair of glasses as recited in claim 13, wherein the radio is designed to receive signals from one of multiple and proximate AM modulated frequencies without tuning.

20. A pair of glasses as recited in claim 13, wherein the power level of the transmitter of the information is low.

21. A pair of glasses as recited in claim 13, wherein there are multiple transmitters for the radio, and the radio captures its signals from the transmitters based on proximity.

22. A pair of glasses as recited in claim 13, wherein the frequencies the radio are designed for can be adjusted by the person.

23. A pair of glasses as recited in claim 1, wherein the speaker is part of a player that can play the information stored in a memory device.

24. A pair of glasses as recited in claim 23, wherein the glasses include the memory device.

25. A pair of glasses as recited in claim 23, wherein the glasses include a connector, which can couple to the memory device, which is external to the glasses.

26. A pair of glasses as recited in claim 23,

wherein at least a portion of the information in the memory includes a plurality of parts,

wherein the number of parts are categorized, and

wherein the categorization is hierarchical, with the hierarchy having more than one level.

27. A pair of glasses as recited in claim 26, wherein the glasses include a switch for selecting one part out of the plurality of parts for the player to play.

28. A pair of glasses as recited in claim 1,

wherein the power source is a battery,

wherein the battery is encapsulated in a temple of the glasses, and

wherein the temple is sealed so that the battery is typically not replaceable without breaking the temple.

29. A pair of glasses as recited in claim 1,

wherein the power source is a battery,

wherein the battery is encapsulated in a temple of the glasses, and

wherein the battery is replaceable.

30. A pair of glasses as recited in claim 1, wherein the glasses include a timer, which would turn the speaker off after the speaker has been turned on for a preset amount of time.

31. A pair of glasses as recited in claim 1, wherein the switch is activated by mechanical force.

32. A pair of glasses as recited in claim 31, wherein the switch is selected from the list of a conductive-elastomer switch, a membrane switch, a dome switch, a relatively simple wire switch, a roller switch and a switch based on piezoelectric force.

33. A pair of glasses as recited in claim 31, wherein the switch is designed to be turned on, and subsequently not to be turned off by the user.

34. A pair of glasses as recited in claim 33,

wherein the switch includes a piece of insulating material separating at least a portion of the power source and the speaker, and

wherein once the piece of material is removed, the speaker is turned on.

35. A pair of glasses as recited in claim 1, wherein the switch is activated by energies in a type of radiation.

36. A pair of glasses as recited in claim 35, wherein the frequencies of the radiation are selected from one of the optical, infrared and ultraviolet ranges.

37. A pair of glasses as recited in claim 35, wherein the switch includes a photo sensor.

38. A pair of glasses as recited in claim 37, wherein the speaker is turned on if the photo sensor does not receive light.

39. A pair of glasses as recited in claim 1, wherein the switch is activated by magnetic forces.

40. A pair of glasses as recited in claim 39, wherein the switch includes a Hall effect detector.

41. A pair of glasses as recited in claim 40,
wherein the Hall effect detector is in a temple of the glasses, and
wherein there is a magnet in the lens holder adjacent to the temple.

42. A pair of glasses as recited in claim 39, wherein the switch is activated based on changing the inductance of a coil.

43. A pair of glasses as recited in claim 1, wherein the switch is activated based on electrical forces.

44. A pair of glasses as recited in claim 43, wherein the electrical force is based on capacitive effect.

45. A pair of glasses as recited in claim 43, wherein the electrical force is based on resistive effect.

46. A pair of glasses as recited in claim 1,
wherein the switch includes a temperature sensor, and
wherein the switch's activation depends on temperature.

47. A pair of glasses as recited in claim 1,
wherein the switch includes an audio detector, and
wherein the switch's activation depends on sound energies.

48. A pair of glasses as recited in claim 1, wherein the switch is controlled by a remote controller.

49. A pair of glasses as recited in claim 1,
wherein the switch includes two sensors, and
wherein the switch is activated by the differential outputs from the two sensors.

50. A pair of glasses as recited in claim 1, wherein the switch provides a plurality of degrees of control.

51. A pair of glasses as recited in claim 50, wherein the change from one degree to the next is gradual and not noticeably discrete.

52. A pair of glasses as recited in claim 51, wherein the switch includes two sensors arranged in quadrature.

53. A pair of glasses as recited in claim 52, wherein the two sensors are photo detectors.

54. A pair of glasses as recited in claim 1, wherein the switch is positioned on one of the side surfaces of one of the temples of the glasses.

55. A pair of glasses as recited in claim 1, wherein the switch is positioned on one of the top surfaces of one of the temples of the glasses.

56. A pair of glasses as recited in claim 1, wherein the switch is positioned at one of the hinges of the glasses.

57. A pair of glasses as recited in claim 1, wherein the switch takes into consideration perception.

58. A pair of glasses as recited in claim 57, wherein the switch includes two mechanical switches, one with a surface that is smoother than the other.

59. A pair of glasses as recited in claim 57, wherein the switch includes two mechanical switches, one being higher than the other.

60. A pair of glasses as recited in claim 1 further comprising at least one light emitting diode.

61. A pair of glasses as recited in claim 60, wherein the activation of at least one of the diode is synchronized to the sound of the speaker.

62. A pair of glasses as recited in claim 1 further comprising a specially-designed surface texture, which would produce a specific audio tone when scratched

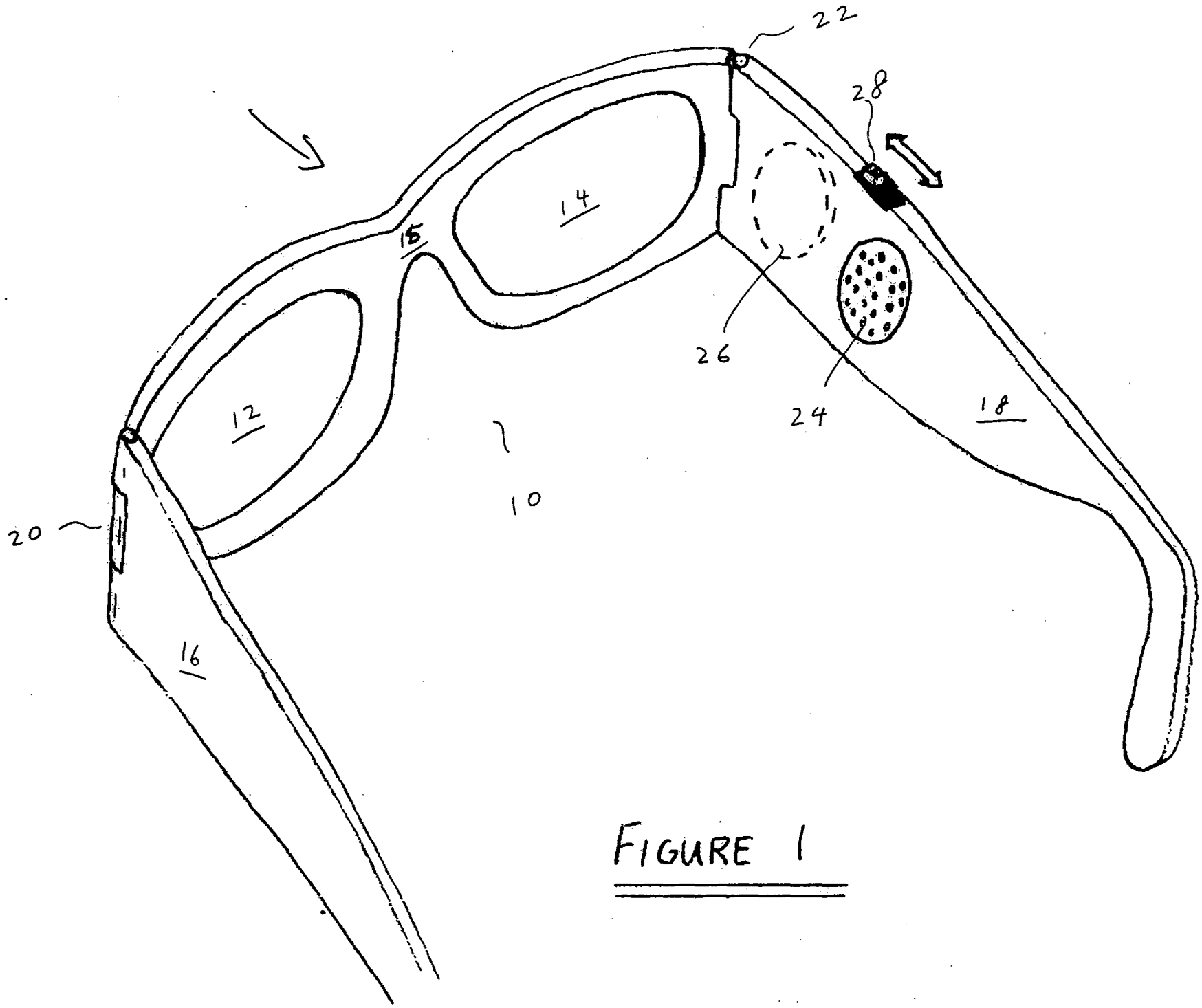


FIGURE 1

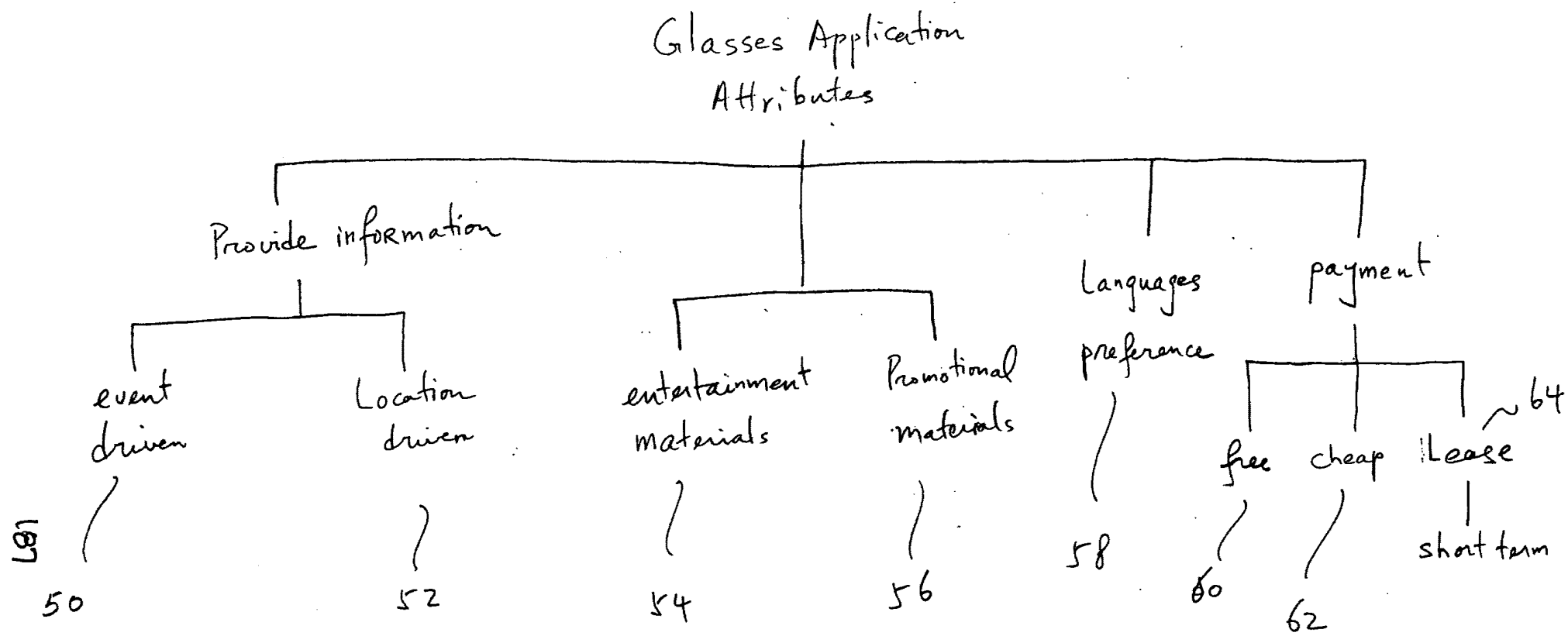
Glasses Application Attributes
Provide information
event driven
Location driven
entertainment materials
Promotional materials
Languages preference
payment
free
cheap
Lease
short term
50
52
54
56
58
60
62
64

Fig. 2

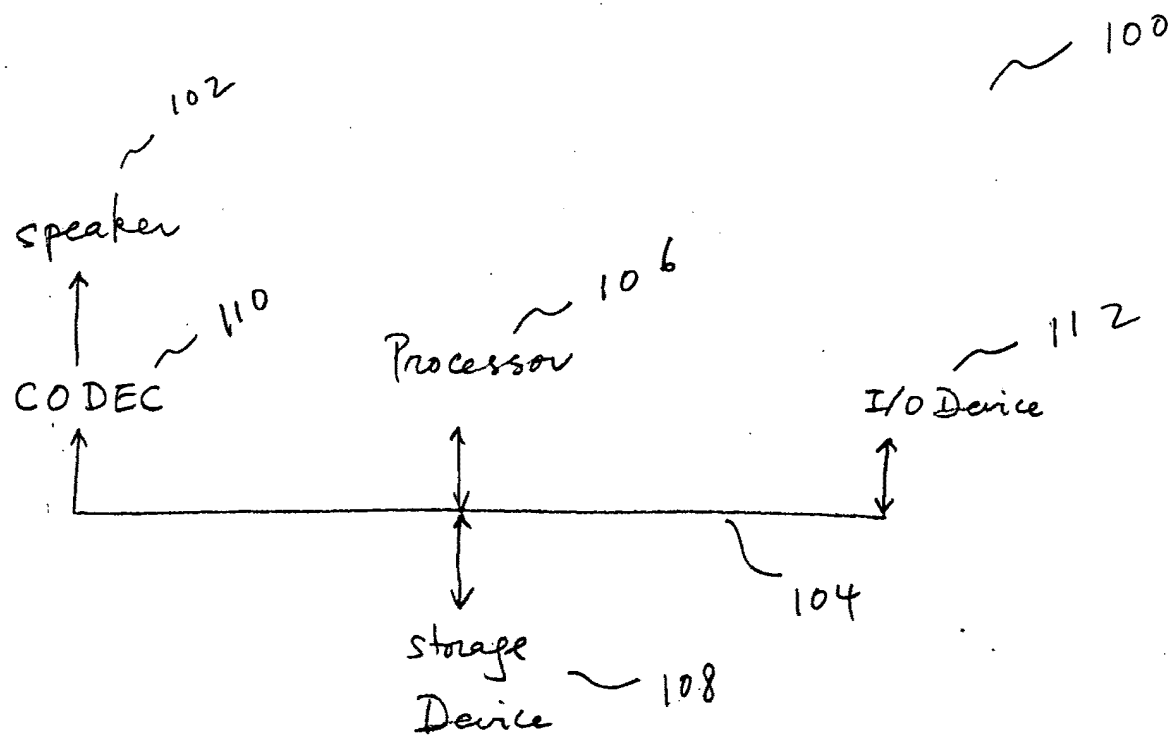
100
102
speaker
110
CODEC
106
Processor
112
I/O Device
104
storage
Device
108

FIG. 3

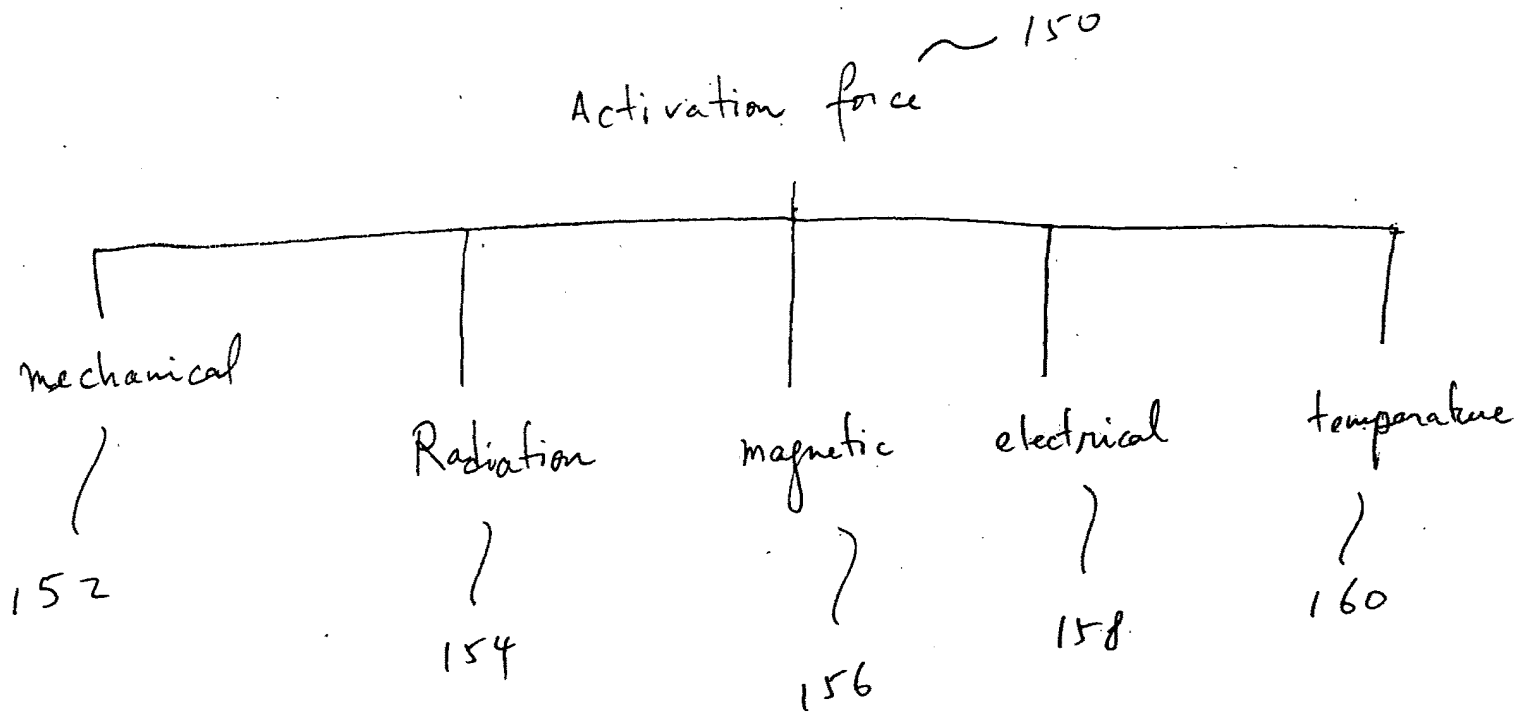
Activation force
150
mechanical
152
Radiation
154
magnetic
156
electrical
158
temperature
160

Fig 4

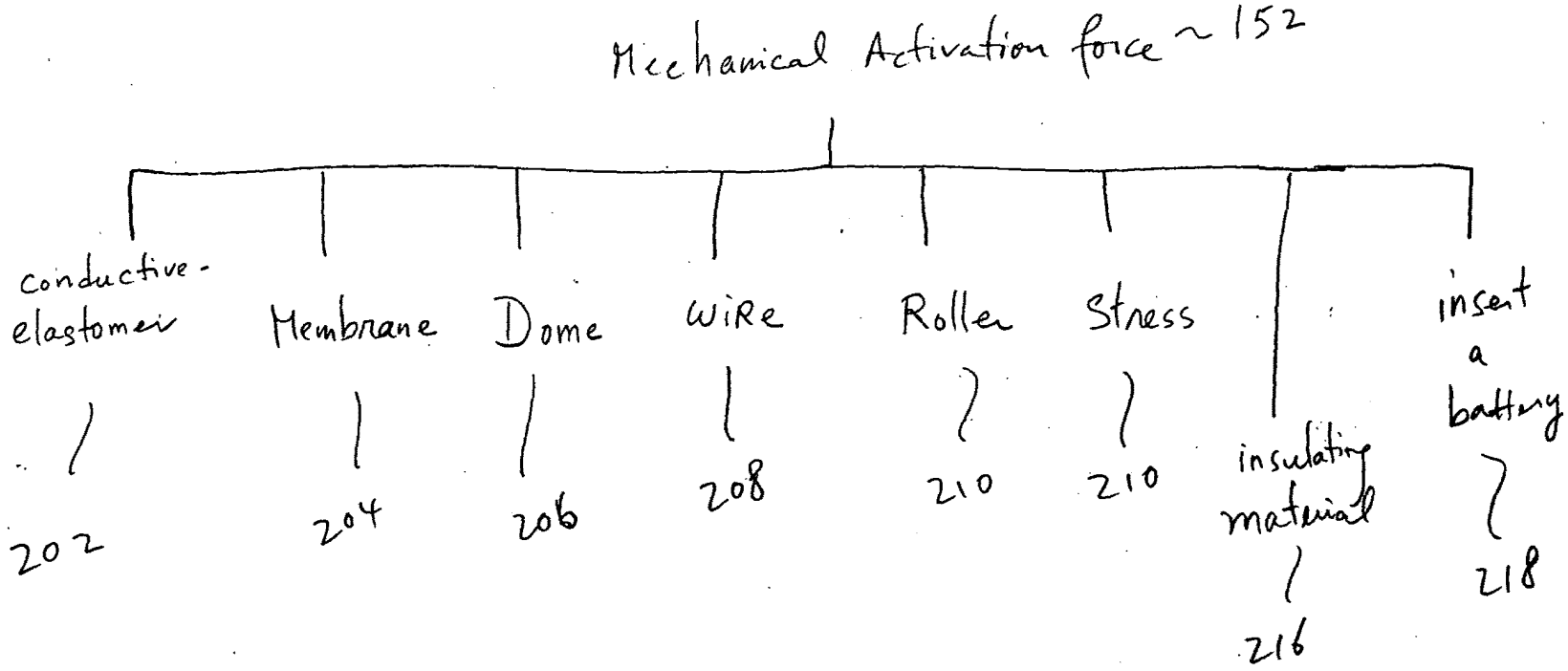
Mechanical Activation force ~ 152
conductive-elastomer
202
Membrane
204
Dome
206
Wire
208
Roller
210
Stress
210
insulating material
216
insert a battery
218

Fig. 5

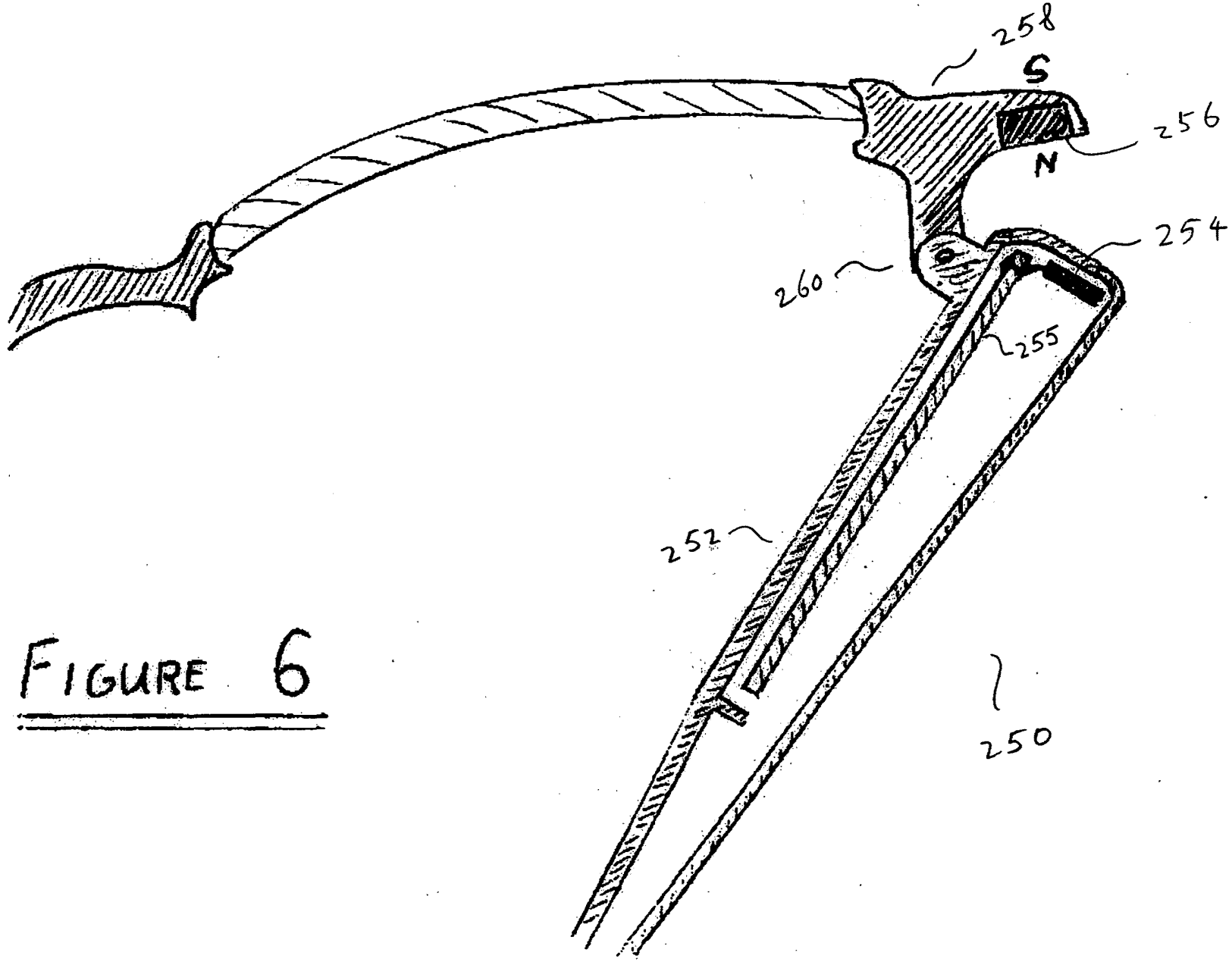


FIGURE 6

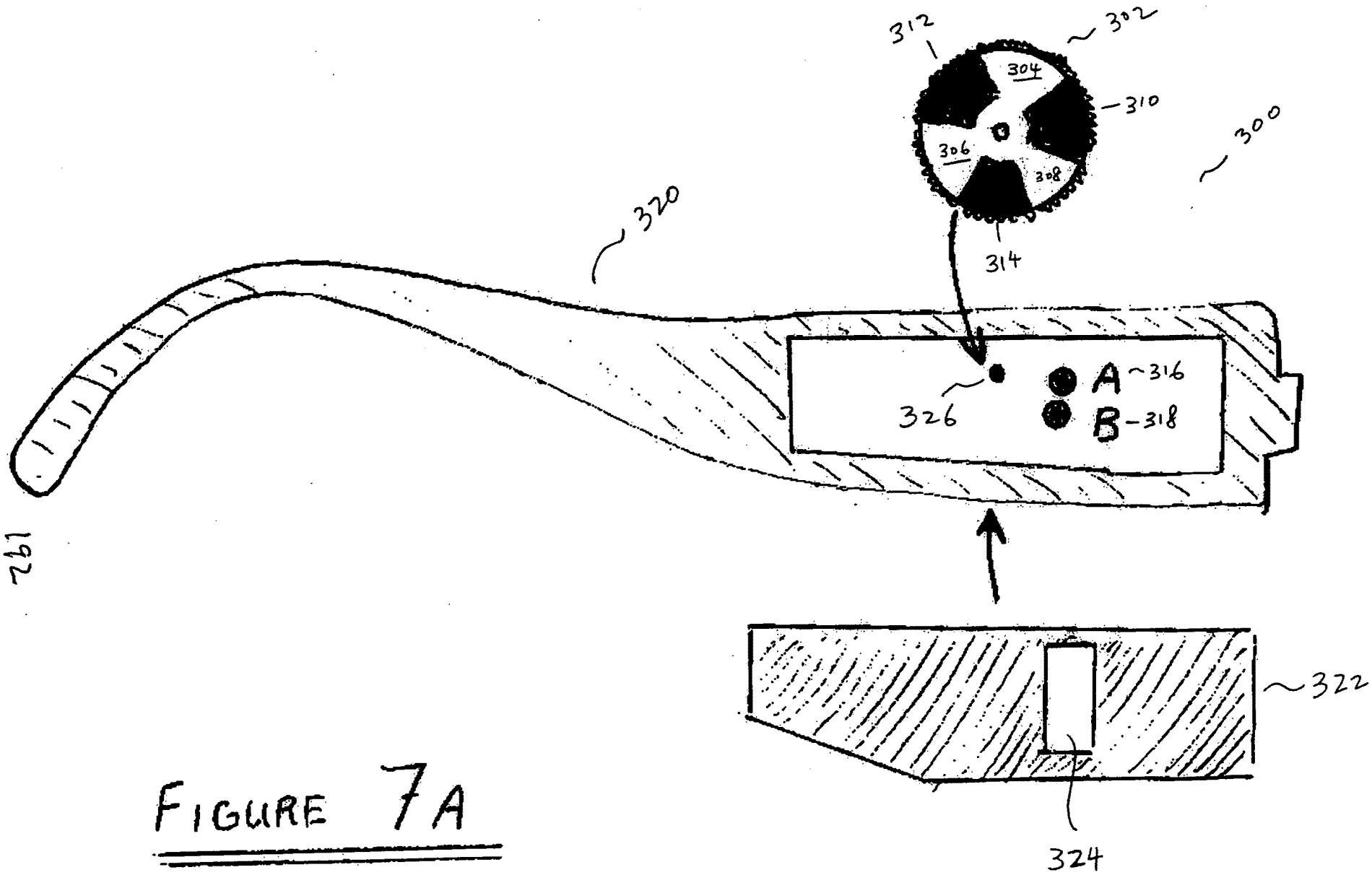


FIGURE 7A

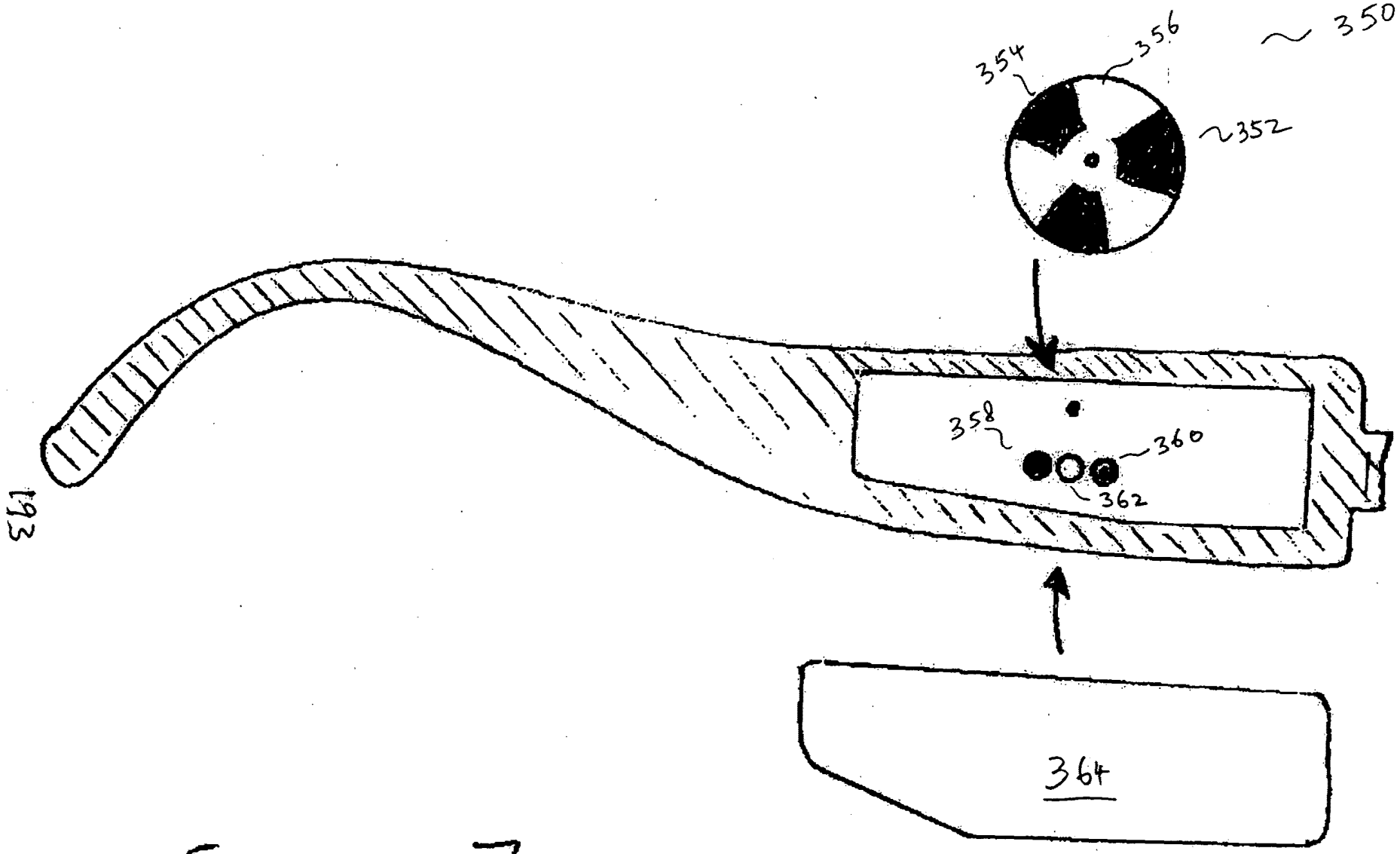


FIGURE 7B

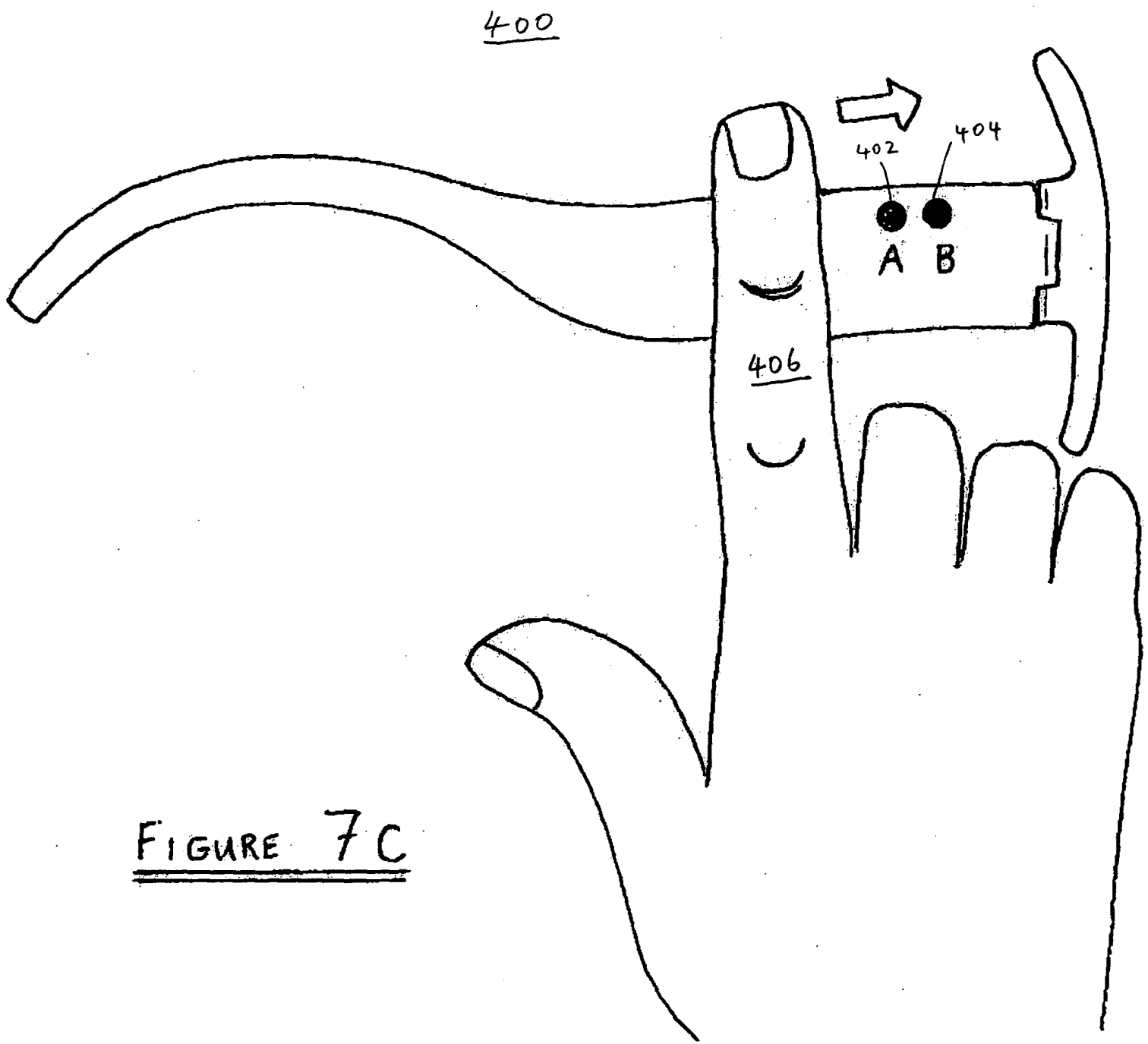


FIGURE 7C

PATENT APPLICATION SERIAL NO. _____

U.S. DEPARTMENT OF COMMERCE
PATENT AND TRADEMARK OFFICE
FEE RECORD SHEET

06/30/2004 HGUTEMA1 00000026 60583169

01 FC:2005 80.00 OP

PTO-1556
(5/87)

*U.S. Government Printing Office: 2002 — 489-267/59033