UNITED STATES PATENT AND TRADEMARK OFFICE

BEFORE THE PATENT TRIAL AND APPEAL BOARD

LUXOTTICA OF AMERICA INC.
Petitioner

v.

E-VISION OPTICS, LLC.
Patent Owner

Case IPR2024-01070
Patent No. 8,801,174

PATENT OWNER'S RESPONSE TO PETITION

Mail Stop PATENT BOARD
Patent Trial and Appeal Board
U.S. Patent & Trademark Office
P.O. Box 1450
Alexandria, VA 22313-1450

TABLE OF CONTENTS

I. INTRODUCTION 1

II. INADEQUACY OF THE PRIOR ART AND THE NEED FOR IMPROVED ELECTRONICS INCORPORATION INTO EYEWEAR 3

III. THE '174 PATENT'S ELECTRONIC EYEWEAR AND MANUFACTURING TECHNIQUES 5

A. Overview of the '174 Patent 5

B. Claim Construction 14

C. Level of Ordinary Skill in the Art 16

IV. THE CHALLENGED CLAIMS ARE PATENTABLE 16

A. Prior Art Overview 22

1. Brunton (Grounds 1-4) 22

2. Kokonaski-999 (Grounds 4, 8) 23

3. Hattori-913 (Ground 5) 25

4. Delorenzo (Grounds 6, 7) 28

5. Kokonaski-579 (Ground 8) 30

6. Howell-596 (Ground 9) 30

7. Eichelberger (Ground 9) 32

8. Sikonowiz (Ground 9) 33

B. Claim 1 is Patentable Because Petitioner's Cited Prior Art Does Not Disclose or Suggest Using Conductors to "Constrain" the Claimed Electronics Module 34

1. Brunton (Grounds 1 and 2) Does Not Anticipate or Render Obvious Independent Claim 1 35

2. Kokonaski-999 in View of Brunton (Ground 4) Does Not Render Claim 1 Obvious 45

3. Hattori-913 (Ground 5) Does Not Render Claim 1 Obvious 48

4. Delorenzo (Grounds 6 and 7) Does Not Anticipate or Render Obvious Claim 1 54

C. Dependent Claims 2-14 Are Patentable Because Petitioner Fails to Show that Any of Grounds 1-7 Render Obvious Independent Claim 1 57

D. Claim 15 Is Patentable Because Petitioner's Cited Prior Art Does Not Disclose or Suggest the Claimed Method Steps 58

1. Kokonaski-999 in View of Kokonaski-579 (Ground 8) Does Not Render Claim 15 Obvious 59

2. Howell-596 in View of Eichelberger (Ground 9) Does Not Render Claim 15 Obvious 60

E. Dependent Claims 16-19 Are Patentable Because Petitioner Fails to Show that Grounds 8 or 9 Render Obvious Independent Claim 15 63

1. Petitioner Fails to Establish that a POSITA Would Have Been Motivated to Combine Howell-596 and Eichelberger (Ground 9) to Render Claim 16 Obvious 63

2. Petitioner Fails to Establish that Dependent Claim 18 is Rendered Obvious Under Ground 9 65

V. CONCLUSION 66

TABLE OF AUTHORITIES

Page(s)

Cases

Bd. of Regents of the Univ. of Tex. Sys. v. BENQ Am. Corp.,
533 F.3d 1362, 1371 (Fed. Cir. 2008) .....

Dynamic Drinkware, LLC v. Nat'l Graphcis, Inc.,
800 F. 3d 1375, 1378-79 (Fed. Cir. 2015) .....

Haruna, 249 F.3d 1327, 1335 (Fed. Cir. 2001) .....

Search Techs LLC v. *Lending Tree, LLC*, 588 F.3d 1063, 1075 (Fed. Cir. 2009) .....

TorPharm, Inc. v. Ranbaxy Pharmaceuticals, Inc.,
336 F.3d 1322, 1327, (Fed. Cir. 2003) .....

Varma, 816 F.3d 1352, 1363 (Fed. Cir. 2016) .....

Statutes

35 U.S.C. § 316(a)(8) 1

37 C.F.R. § 42.120 1

EXHIBIT LIST

Exhibit	Description
2015	Declaration of Professor James H. Oliver, Ph.D.
2016	*Curriculum Vitae* of Professor James H. Oliver, Ph.D.
2017	*e-Vision Optics, LLC and Vision Smart Optics, Inc. v. Luxottica Group S.P.A. and Luxottica of America Inc.*, Case No. 8:23-cv02013 AB (SHK), Luxottica's (Petitioner's) Opening Claim-Construction Brief, Dkt. 76 (C.D. Cal., Aug. 30, 2024) ("Petitioner's Claim Construction Brief")
2018	Second Translation of Japanese Patent Application Publication No. S58-113913 ("Hattori-913 Second Translation")

Pursuant to 35 U.S.C. § 316(a)(8) and 37 C.F.R. § 42.120, e-Vision Optics, LLC ("Patent Owner") submits this Response to the Petition of Luxottica of America Inc. ("Petitioner") seeking *inter partes* review ("IPR") of U.S. Patent No. 8,801,174 (EX-1001, "the '174 patent").

I. INTRODUCTION

Patent Owner is an innovative research company that develops novel electronic eyeglasses that can provide many benefits to people in need of prescription glasses, individuals who enjoy wearing sunglasses, and users of consumer electronics.

The '174 patent introduced novel techniques for implementing electronics into eyewear while maintaining the traditional aesthetics and functionality of eyewear. For example, the '174 patent introduced techniques for implementing electronics within eyewear such that the electronics did not limit the fashion design or materials of the eyeglass frame. The '174 patent also introduced techniques for the efficient design and manufacturing of eyeglass frames and components that implement such electronics.

Petitioner began providing electronic eyeglasses that, without authorization and despite prior licensing discussions with Patent Owner, implemented Patent Owner's patented technology into its own consumer electronics. Accordingly, on

October 16, 2023, Patent Owner filed suit against Petitioner in the United States District Court for the Central District of California, asserting infringement of the '174 patent and other patents in Patent Owner's portfolio.

The Board should find the challenged claims patentable because the prior art fails, both alone and in combination, to disclose or suggest each limitation recited in the challenged claims.

Grounds 1-7 fail because Petitioner fails to show that the references Brunton (Grounds 1-2), Kokonaski-999 in view of Brunton (Ground 4), Hattori-913 (Ground 5), and Delorenzo (Grounds 6-7) disclose or render obvious the *constrain* limitation of claim 1 and its dependent claims. The term *constrain*, as recited in the challenged claims, "restricts the [electronics] module from being removed from the temple or moved within the temple." (EX-1001, '174 patent, 11:62-63.) Petitioner's prior art references do not describe or suggest any conductors physically *constraining* the electronics module as required by the challenged claims and therefore do not disclose or teach this limitation. Ground 3, for Brunton in view of Carling (dependent claims 7, 8, and 13), likewise fails because Petitioner does not show that the addition of Carling renders claim 1 obvious and therefore fails to show the dependent claims are rendered obvious as well.

Grounds 8 and 9 also fail because Petitioner fails to show that references Kokonaski-999 in view of Kokonaski-579 (Ground 8) and Howell-596 in view of Eichelberger and Sikonowiz (Ground 9) render obvious the *method* limitation of claim 15. None of the references Petitioner relies upon for Grounds 8 and 9 disclose or suggest methods of manufacturing. Here too, because Petitioner fails to show independent claim 15 is rendered obvious under Grounds 8 and 9, Petitioner also fails to show that the dependent claims are rendered obvious as well.

Accordingly, the Board should hold that Petitioner has not met its burden and that the challenged claims are patentable.

II. INADEQUACY OF THE PRIOR ART AND THE NEED FOR IMPROVED ELECTRONICS INCORPORATION INTO EYEWEAR

At the time of the '174 patent, there was a growing "trend of utilizing electronics in eyewear" that was "accelerating and the applications being developed by others [were] expanding." (EX-1001, '174 patent, 1:21-23.) But as recognized by the '174 patent inventors, it was becoming "increasingly relevant to find ways to incorporate electronics into eyewear without harming the aesthetics and functionality of the eyewear," and it was important to implement electronics in a manner that did "not limit the fashion design of the eyeglass frame or limit the materials of eyeglass frame." (*Id.*, 1:27-28.)

The '174 patent implements an electronics module into eyewear using a novel technique to physically secure the module using conductors. In addition to securing the module, this design "reduce[s] the need to use multiple fasteners for the electronics module because, for instance, at least a portion (e.g. one side of) the electronics module may be held in place by the electrical conductor." (EX-1001, '174 patent, 10:18-21.) Where prior art teachings failed, the '174 patent implements electronics into eyewear in an economical and low-footprint manner. None of the prior art identified by Petitioner discloses or renders obvious this technique.

The '174 patent also implements design and manufacturing techniques for eyeglass frames and the aforementioned electronics that improved over prior art teachings. By using a substrate as a "back bone," "the electronic components may be more readily physically coupled together prior to being inserted into the more confining electronics module enclosure." (EX-1001, '174 patent, 21:42-46.) Furthermore, the entire assembly and components can be "disposed within the outer casing of an electronics module (or in some embodiments, directly into a cavity of a temple of electronic eyewear)." (*Id.*, 21:66-22:1.) Petitioner fails to identify a prior art teaching that discloses or renders obvious these method techniques for manufacturing and design.

III. THE '174 PATENT'S ELECTRONIC EYEWEAR AND MANUFACTURING TECHNIQUES

A. Overview of the '174 Patent

The '174 patent is entitled "Electronic frames comprising electrical conductors" and describes and claims eyewear with improved electronics incorporation while maintaining the aesthetics and functionality of the eyewear. The '174 patent also discloses manufacturing techniques for implementing electronics into modules and the eyewear itself.

The '174 patent features an electronics module in its eyewear. This electronics module implements "a housing or container that may comprise one or more electronic components," including, for example, "a power source (such as a battery), a sensing mechanism (such as a capacitance switch, which may activate or deactivate the electronics) and/or a controller (such as a microprocessor)." (EX-1001, '174 patent, 8:8-14.) Figure 2 is illustrated below demonstrating an exemplary eyewear (101) of the '174 patent including a temple (102), a lens housing (103) and lens (104), and an electronic module (106):

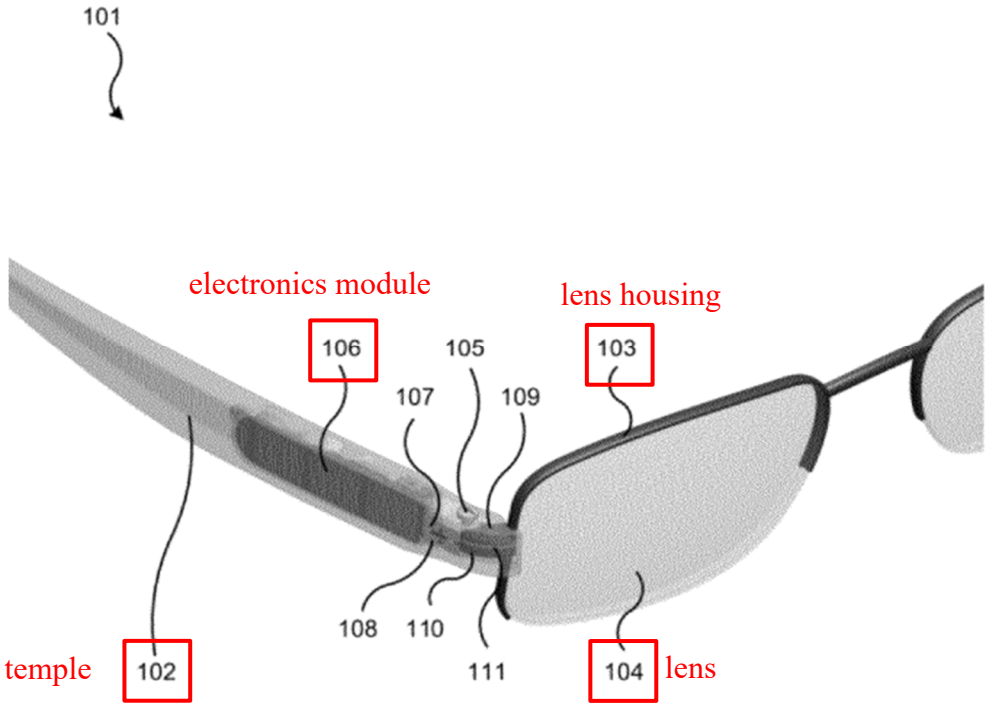

(EX-1001, '174 patent, Figure 2 (annotations added; also shown are fastener (105), electrical conductors (107 and 108), conductive paths (109 and 110), and insulator material (111)).)

The '174 patent implements a novel technique for physically securing the electronics module to the eyewear by using the conductors instead of traditional mechanical instruments such as screws, fasteners, and cover plates. For example, a "first electrical conductor may constrain the electronics module when it is disposed within the temple such that, during normal use, the electrics module remains in place. However, the electronics module and/or the electrical conductor may be configured such that the module may also be removed from the temple without damaging the

temple." (EX-1001, '174 patent, 13:44-49.) In addition to securing the module, this design "reduce[s] the need to use multiple fasteners for the electronics module because, for instance, at least a portion (e.g. one side of) the electronics module may be held in place by the electrical conductor." (*Id.*, 10:18-21.)

Figure 5, illustrated below, shows a closeup of exemplary eyewear (101) and a temple (102) and the configuration for fitting and securing an electronics module. Shown and annotated with red boxes are electrical conductors (107 and 108); a cavity (112) in the temple fitted for an electronics module; electrical conductor portions (113 and 114) with openings for fasteners to be inserted and apply a tightening force; and electrical conductor portions (115 and 116) that are disposed within an electronics module:

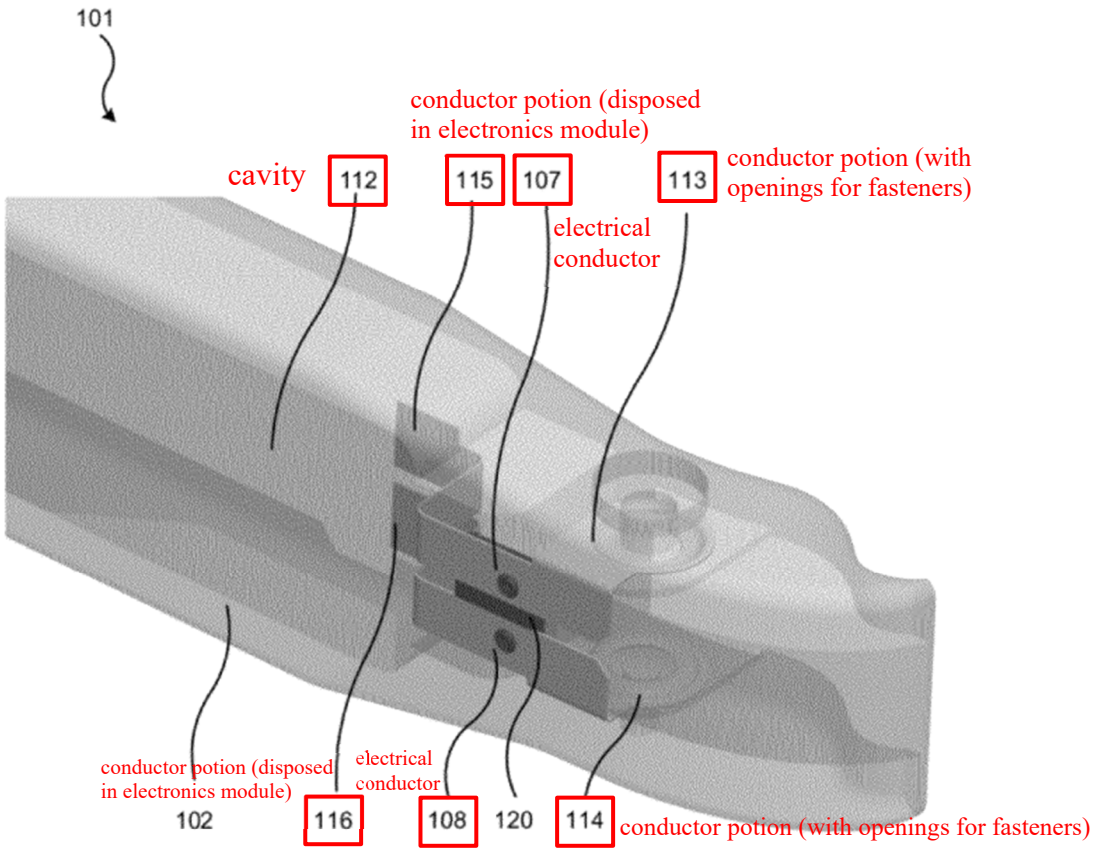

(EX-1001, '174 patent, Figure 5 (annotations added; also shown is an insulator (120)).)

In another illustrated example, Figure 14 below demonstrates an electronics module (106). Also shown and annotated with red boxes are electrical conductors (107 and 108); electrical conductor portions (113 and 114) with openings for fasteners to be inserted and apply a tightening force; electronics module portion with an opening (117) for a fastener; and electronics module opening (118) with the electrical conductors inserted inside:

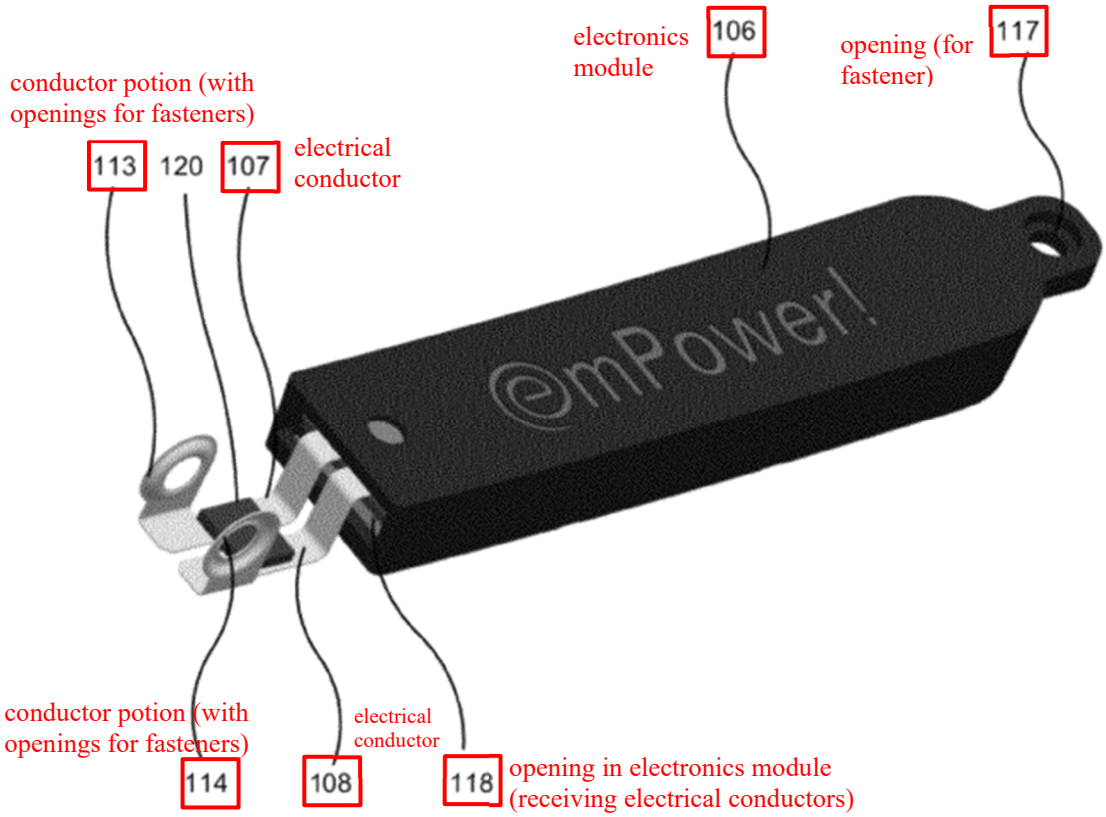

(EX-1001, '174 patent, Figure 14 (annotations added; also shown is an insulator (120)).)

The '174 patent's electronics module can also be removeable. To remove the module, an eyewear wearer can "apply a force to the electronics module that would not be typical during regular use (e.g. when worn by a user, or even dropped or slept on) such as tilting the eyewear, applying a force in a particular direction to the electronics module, and/or removing or loosening one or more fasteners (such as removing a screw that may be holding a part of the electronics module in place)." (EX-1001, '174 patent, 13:50-55.) The electronics module can be "reinserted into the

temple and again constrained by the first electrical conducted such that the module is again coupled to the temple and held in place," for example, by "an opening such that when the module is placed into the first temple, a portion of the first electrical conductors are inserted through the opening and apply a force to the module to hold it against, or disposed within, a cavity of the first temple." (*Id.*, 13:57-65.) The electronics module can also be "removably coupled to the first electrical conductor." (*Id.*, 13:65-67.)

Figure 16, shown below, shows another closeup of exemplary eyewear (101) and a temple (102) in a wireframe view demonstrating the configuration for fitting and securing an electronics module (106). Shown and annotated with red boxes are electronics module (106) and fastener (105) for securing electrical conductors (107 and 108):

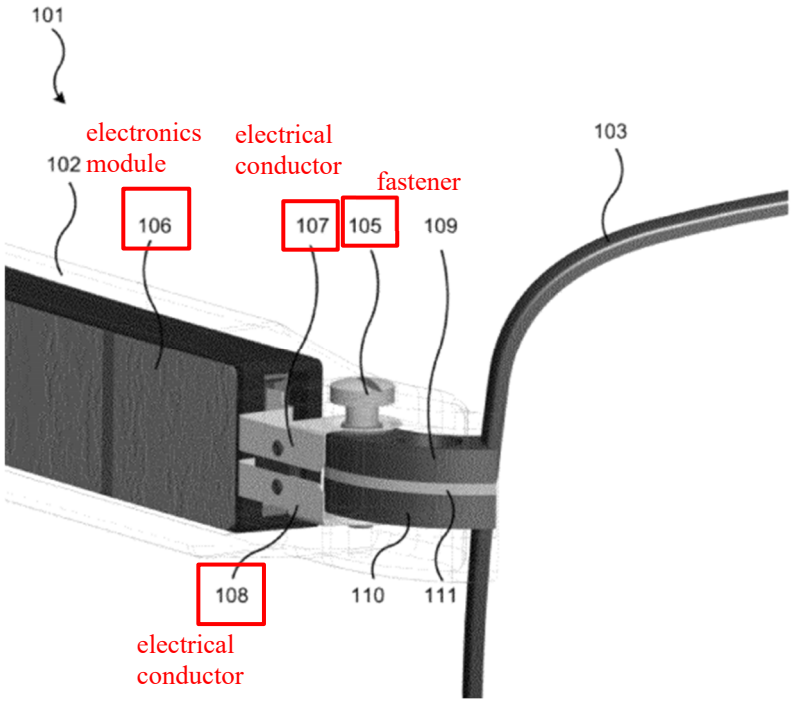

(EX-1001, '174 patent, Figure 16 (annotations added; also shown are a lens housing (103), conductive paths (109 and 110), an insulator material (111)).)

The electronics module system of the '174 patent, described in the preceding paragraphs, introduced novel techniques for implementing electronics into eyewear in an economical and low-footprint manner. No prior art teaching identified by Petitioner discloses or renders obvious this electronics module system and in particular its technique for physically securing the electronics module using the conductors.

Furthermore, the '174 patent "provide[s] for [the] efficient design and manufacturing of the eyeglass frames and components." (EX-1001, '174 patent, 1:33-35.) The inventors "discovered a method of manufacturing" that enabled "more efficient

and timely production of" parts and components such as the "electronics module, particularly those that may comprise a sensor such as a captive touch switch. In particular, the inventors have found that by utilizing a substrate (such as a surface of a touch sensor; preferably a capacitive touch switch) as a 'back bone' (e.g. a platform) on which other electronic components may be disposed on, the electronic components may be more readily physically coupled together prior to being inserted into the more confining electronics module enclosure." (*Id.*, 21:36-46.)

Figure 19, shown below, shows an exemplary molded capacitive touch switch (201) with electronic components in an electronics module. Shown and annotated with red boxes are a capacitive touch switch (201), a flexible circuit (202), a printed circuit board (PCB) (203), a power source (204), a partial enclosure (205) (e.g., outer casing of an electronics module), electrical conductors (206) (e.g., pogo pins), and electrical components (207) coupled to the PCB:

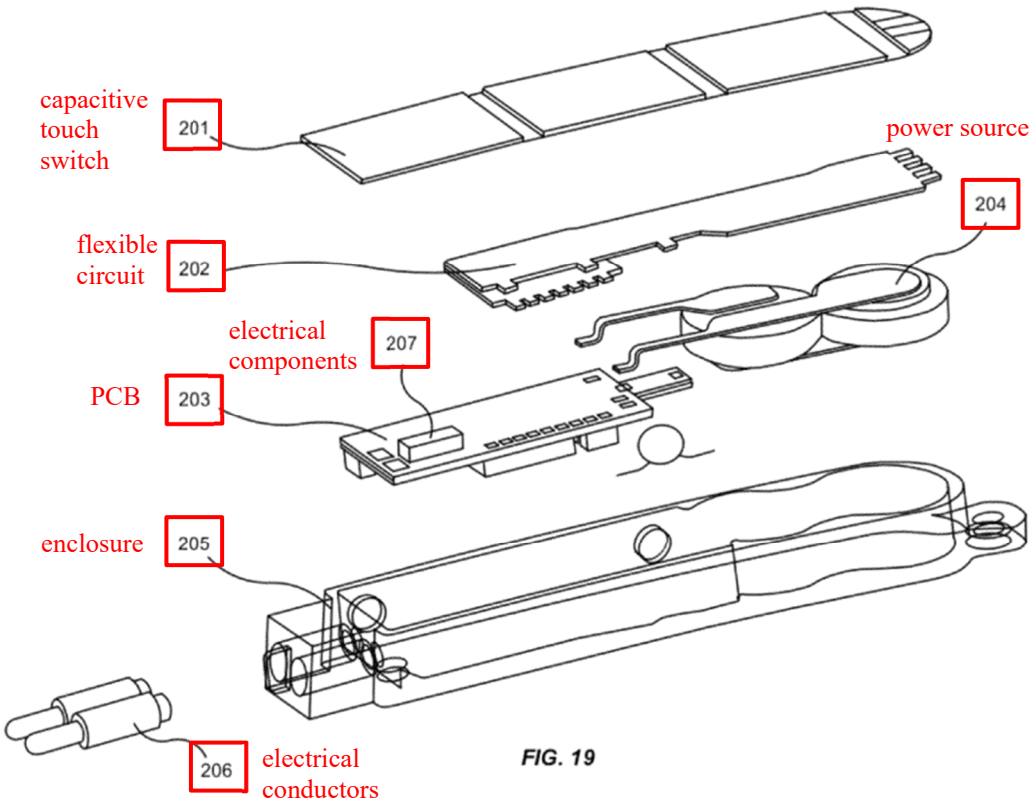

EX-1001, '174 patent, Figure 19 (annotations added).

The electronic components can be "disposed or coupled to a capacitive touch switch (e.g. through any suitable technique, including reflow soldering)," with the "electrical connections between each of the electrical components may then be established (e.g. by soldering)." (EX-1001, '174 patent, 21:60-63.) The entire assembly and components can "then be disposed within the outer casing of an electronics module (or in some embodiments, directly into a cavity of a temple of electronic eyewear)." (*Id.*, 21:66-22:1.) Figure 30, shown below, demonstrates a flow chart with exemplary steps for implementing the '174 patent's manufacturing methods:

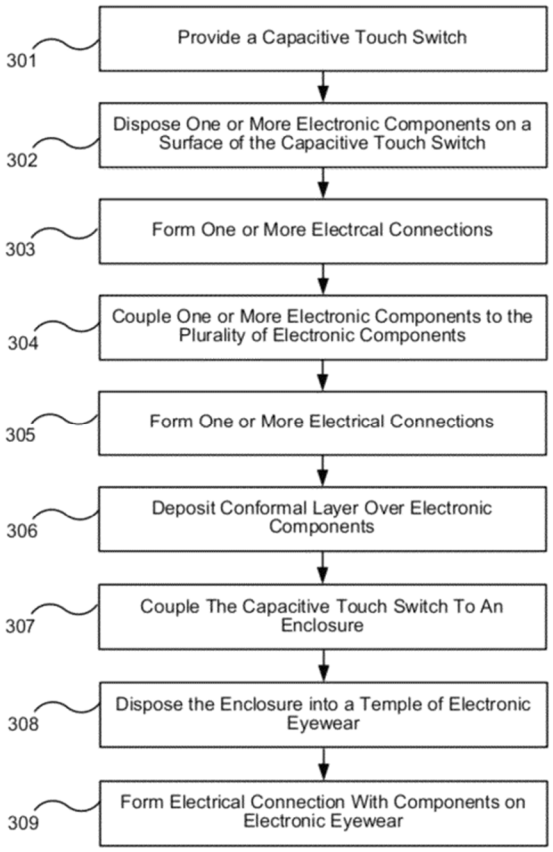

(EX-1001, '174 patent, Figure 30.)

The above-discussed manufacturing methods of the '174 patent improved over prior techniques that did not address how to effectively put together eyewear with electronic modules and similar components. Petitioner fails to identify prior art that discloses or renders obvious these method techniques for manufacturing and design.

B. Claim Construction

Patent Owner applies the plain and ordinary meaning of the '174 patent claims as understood by a person of ordinary skill in the art ("POSITA"), consistent with

Patent Owner's position in the district court litigation. Petitioner, on the other hand, proposed the following constructions in the district court:

Claim(s)	**Claim Term**	**Petitioner's Construction**
1	"electronics module"	"a housing or container with one or more electronic components disposed therein"
1	"conductive path"	"a continuous path for which electrons (i.e. current) may flow from one point to another"
1	***"couple the electronics module to the first temple to constrain the electronics module"***	***"physically secure or provide a restraining force to the electronics module to retain the module in a fixed position within the temple"***
15	"coupling the capacitive touch switch to a partial enclosure to constrain the capacitive touch switch"	"physically securing or providing a restraining force to the capacitive touch switch to retain the capacitive touch switch in a fixed position relative to an enclosure that substantially surrounds the electronic components that are disposed on a surface of the capacitive touch switch"

(*See* EX-2017, Petitioner's Claim Construction Brief (emphasis added).)

Although Petitioner does not explicitly ask the Board to construe any claim terms in this proceeding, Petitioner's invalidity arguments for claims 1-19 depend on an implicit construction of the term "couple the electronics module to the first temple to ***constrain*** the electronics module" that is inconsistent with Petitioner's own district court construction, the intrinsic record, and the claim language itself. As discussed below in Section IV.B.1, *infra*, this limitation requires that the claimed electrical conductors physically hold the claimed electronics module in place, and it is not rendered obvious by prior art that merely discloses an electrical connection, as Petitioner suggests.

C. Level of Ordinary Skill in the Art

A POSITA at the time of the invention of the '174 patent would have had a bachelor's degree in mechanical engineering, electrical engineering, or computer engineering, or an equivalent degree and, in addition, approximately two years of work experience with embedded electronic devices. More advanced degrees or training in a related discipline or both can compensate for shorter work experience. (EX-2015, Oliver Decl., ¶¶44-46.) Patent Owner's expert, Dr. James Oliver, is qualified to offer opinions under this standard. (*Id.*)

IV. THE CHALLENGED CLAIMS ARE PATENTABLE

Petitioner presented nine grounds challenging the claims of the '174 patent:

Ground 1	Section 102(a)	Anticipated by Brunton	Claims 1, 2, 4, 9, 12
Ground 2	Section 103(a)	Obvious over Brunton	Claims 1-4, 9, 12
Ground 3	Section 103(a)	Obvious over Brunton in view of Carling	Claims 7, 8, 13
Ground 4	Section 103(a)	Obvious over Kokonaski-999 in view of Brunton	Claims 1, 2, 4-6, 9, 12, 14
Ground 5	Section 103(a)	Obvious over Hattori-913	Claims 1, 2, 5, 6, 12, 13
Ground 6	Section 102(a)	Anticipated by Delorenzo	Claims 1, 2, 4, 9, 12, 13
Ground 7	Section 103(a)	Obvious over Delorenzo	Claims 1-4, 9-13
Ground 8	Section 103(a)	Obvious over Kokonaski-999 in view of Kokonaski-579	Claims 15-19
Ground 9	Section 103(a)	Obvious over Howell-596 in view of Eichelberger and Sikonowiz	Claims 15, 16, 18

Petitioner fails to establish that Grounds 1-9 render obvious every limitation of the challenged claims. "In an *inter partes* review, the burden of persuasion is on petitioner to prove unpatentability by a preponderance of the evidence, and that burden never shifts to the patentee. 'Failure to prove the matter as required by the applicable standard means that the party with the burden of persuasion loses on that point–thus, if the fact trier of the issue is left uncertain, the party with the burden loses.'" *Dynamic Drinkware, LLC v. Nat'l Graphcis, Inc.*, 800 F. 3d 1375, 1378-79 (Fed. Cir. 2015) (internal quotations and citations omitted).

Grounds 1 (claims 1, 2, 4, 9, and 12) and **2** (claims 1-4, 9, and 12) fail because the contact pins of Brunton do not disclose or suggest *constraining* the hearing aid Petitioner relies upon as the *electronics module*. Therefore, Petitioner fails to show that Brunton discloses or renders obvious claim 1. Because Petitioner fails to show that Brunton discloses or renders obvious claim 1, Petitioner also fails to show that Brunton discloses or renders obvious the dependent claims under Grounds 1 (claims 2, 4, 9, and 12) and 2 (claims 2-4, 9, and 12).

Ground 3 (claims 7, 8, and 13) fails because Petitioner fails to show that adding Carling to Brunton renders obvious claim 1. Because Petitioner fails to show that Brunton renders obvious claim 1 and does not show that the addition of Carling cures this deficiency, Petitioner fails to show that dependent claims 7, 8, and 13 are rendered obvious by Brunton in view of Carling under Ground 3.

Ground 4 (claims 1, 2, 4-6, 9, 12, and 14) fails because Petitioner fails to show that Kokonaski-999 in view of Brunton cures the deficiencies of Grounds 1 and 2 described above. Petitioner relies on the same flawed contact pins argument and fails to show how contact pins teach *constraining* an electronics module as required by the claims. Therefore, Petitioner fails to show that Kokonaski-999 in view of Brunton renders obvious claim 1. For the same reason, Petitioner fails to show

that dependent claims 2, 4-6, 9, 12, and 14 are rendered obvious by Kokonaski-999 in view of Brunton.

Ground 5 (claims 1, 2, 5, 6, 12, and 13) fails because Petitioner fails to show that the ZEBRA connector of Hattori-913 teaches *constraining* the integrated circuit Petitioner relies upon as the claimed *electronics module*. Therefore, Petitioner fails to show that Hattori-913 renders obvious claim 1. Because Petitioner fails to show that Hattori-913 renders obvious claim 1, Petitioner also fails to show that Hattori-913 renders obvious dependent claims 2, 5, 6, 12, and 13 under Ground 5.

Grounds 6 (claims 1, 2, 4, 9, 12, and 13) and **7** (claims 1-4 and 9-13) based on Delorenzo fail because Petitioner fails to sufficiently show (1) what *electronics module* Delorenzo alleged teaches and (2) how any such *electronics module* is *constrained*. Therefore, Petitioner fails to show that Delorenzo discloses or renders obvious claim 1 under Grounds 6 and 7. Because Petitioner fails to show that Delorenzo discloses or renders obvious claim 1, Petitioner also fails to show that Delorenzo discloses or renders obvious the dependent claims under Grounds 6 (claims 2, 4, 9, 12, and 13) and 7 (claims 2-4 and 9-13).

Ground 8 (claims 15-19) fails because Petitioner fails to sufficiently show the *method* of Kokonaski-999 in view of Kokonaski-579. Because Petitioner fails to identify ***any*** teaching of ***any*** *method* in these two Kokonaski references¸ Petitioner

fails to show that Kokonaski-999 in view of Kokonaski-579 renders obvious claim 15. And because Petitioner fails to show Kokonaski-999 in view of Kokonaski-579 renders obvious independent claim 15, Petitioner also fails to show the same combination renders obvious dependent claims 16-19.

Ground 9 (claims 15, 16, and 18) fails because Petitioner fails to sufficiently show the *method* of Howell-596 in view of Eichelberger and Sikonowiz. Here too, Petitioner fails to identify ***any*** teaching of ***any*** *method* in these prior art references. Therefore, Petitioner fails to show Howell-596 in view of Eichelberger and Sikonowiz renders obvious independent claim 15. And because Petitioner fails to show that Howell-596 in view of Eichelberger and Sikonowiz renders obvious independent claim 15, Ground 9 is deficient for dependent claims 16 and 18.

A table summarizing Petitioner's Grounds 1-9 and why they fail is presented below.

Ground	Reference(s)	Claims	Deficiency
1	Brunton (102)	1, 2, 4, 9, 12	Fails to show contact pins *constrain* an *electronics module* [cl. 1]; fails to show dependent claims based on this deficiency
2	Brunton (103)	1-4, 9, 12	Fails to show contact pins *constrain* an *electronics module* [cl. 1]; fails to show dependent claims based on this deficiency
3	Brunton, Carling	7, 8, 13	See above; does not show Carling makes up for the deficiencies of Brunton
4	Kokonaski-999, Brunton	1, 2, 4-6, 9, 12, 14	See above; to show contact pins *module* an *electronics module* [cl. 1]; fails to show dependent claims based on this deficiency
5	Hattori-913 (103)	1, 2, 5, 6, 12, 13	Fails to show ZEBRA connector *constrains* an *electronics module* [cl. 1]; fails to show dependent claims based on this deficiency
6	Delorenzo (102)	1, 2, 4, 9, 12, 13	Fails to show *electronics module* or how same is *constrained* [cl. 1]; fails to show dependent claims based on this deficiency
7	Delorenzo (103)	1-4, 9-13	Fails to show *electronics module* or how same is *constrained* [cl. 1]; fails to show dependent claims based on this deficiency
8	Kokonaski-999, Kokonaski-579	15-19	Fails to show *method* [cl. 15]; fails to show dependent claims based on this deficiency
9	Howell-596, Eichelberger, Sikonowiz	15, 16, 18	Fails to show *method* [cl. 15]; fails to show dependent claims based on this deficiency

Accordingly, the Board should reject Petitioner's Grounds 1-9 and hold that all challenged claims are patentable.

A. Prior Art Overview

1. Brunton (Grounds 1-4)

Petitioner relies on Brunton for **Grounds 1** (§102; claims 1, 2, 4, 9, 12); **2** (§103; claim 1-4, 9, 12); **3** (in view of Carling; claim 7, 8, 13); and **4** (in view of Kokonaski-999; claim 1, 2, 4-6, 9, 12, 14). Brunton is a patent entitled "Spectacle hearing aid mounting," and it discloses mounting a hearing aid within the temples of spectacles and "obviating the necessity of separate means of support for the microphone and hearing aid elements." (EX-1003, Brunton, 1:47-49.) Figure 1 of Brunton is shown below displaying glasses with a receiver, battery, microphone, and volume control. Hearing aid unit 17 is shown on the left temple below (see red box annotation). Brunton's hearing aid uses "contact pins and the sockets provided with a corresponding number of tubular contacts that are positioned to receive the pins and in which the pins are frictionally retained." (*Id.*, 3:61-65.)

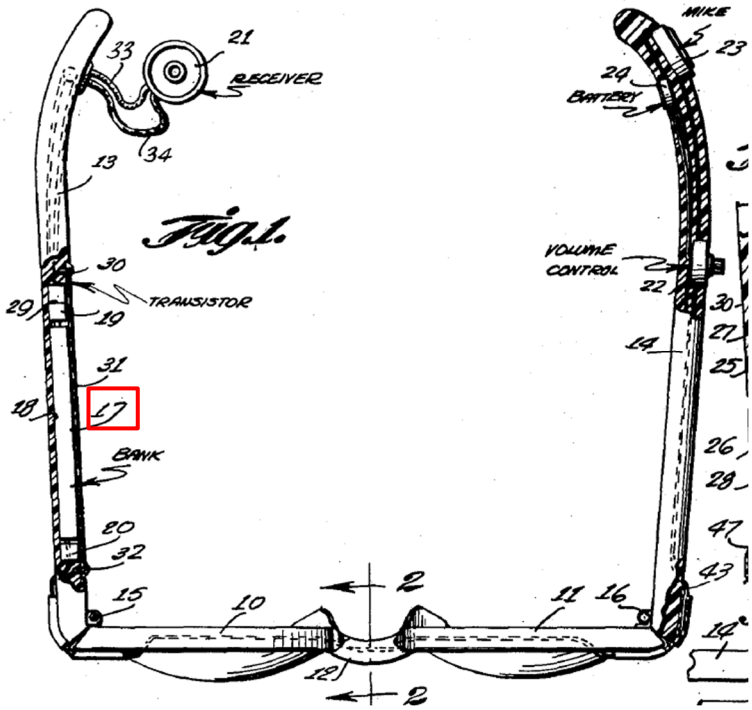

(EX-1003, Brunton, Figure 1 (annotations added).)

Unlike the inventions claimed in the '174 patent, Brunton's hearing aid is not physically held in a fixed position by its contact pins. Instead, Brunton teaches that its hearing aids are physically held in place using a cover plate. (*See* EX-1003, Brunton, 3:74-4:1 ("[T]he temple is provided with a cover plate 31 that is secured in position over the unit 17 and the transistor 29 with screws 32.").)

2. Kokonaski-999 (Grounds 4, 8)

Petitioner relies on Kokonaski-999 for **Grounds 4** (in view of Brunton; claim 1, 2, 4-6, 9, 12, 14); and **8** (in view of Kokonaski-579; claim 15-19). Kokonaski-999 is a PCT publication entitled "Electro-active spectacles and associated electronics." Kokonaski-999 generally relates to electronics for controlling and synchronizing the

operation of electro-active lenses. For example, Kokonaski-999's Figure 2 is illustrated below showing frame 102, electronic module 202, and electro-active lens 104:

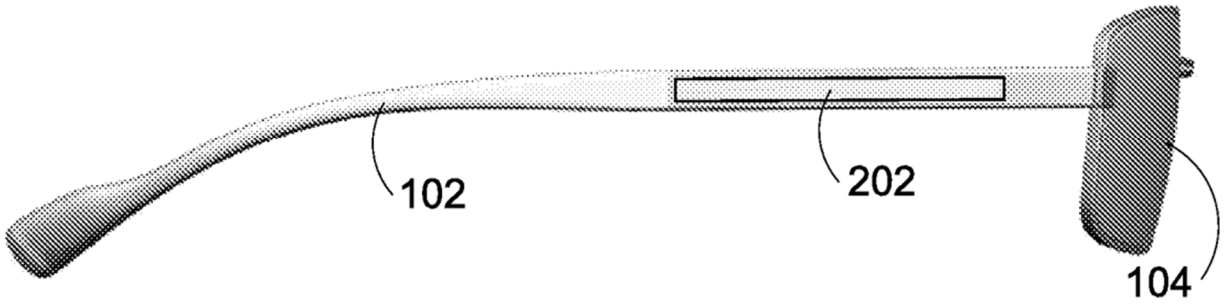

(EX-1004, Kokonaski-999, Figure 2.)

Kokonaski-999's "electronic module" includes a housing and electronic contact pins. However, the electronic module in Kokonaski-999 does not disclose or render obvious key concepts claimed in the '174 patent. For example, Kokonaski-999 does not disclose or render obvious *constraining* an electronic module using conductors, as claimed by the '174 patent. Kokonaski-999's Figure 5, illustrated below, shows electronics module 202 within a housing (502) and first (504) and second contacts (506):

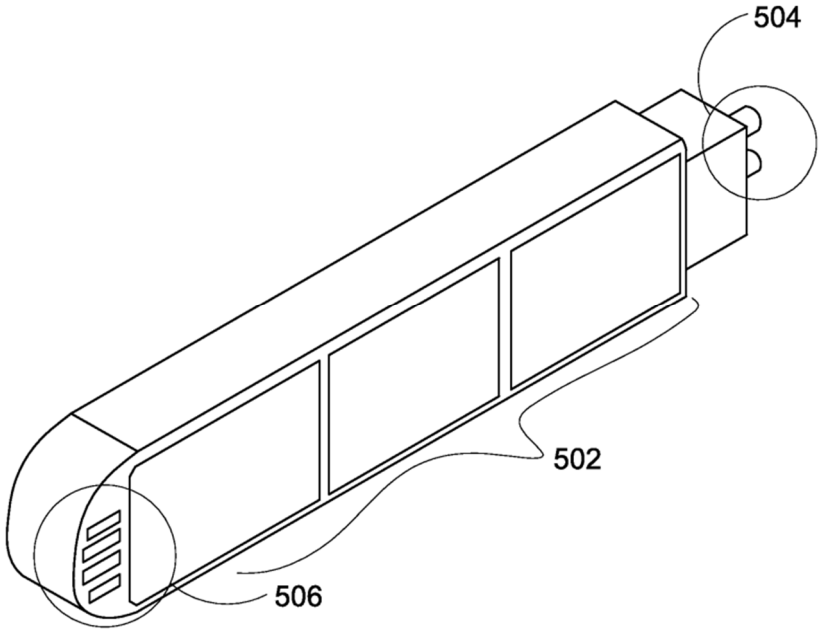

(EX-1004, Kokonaski-999, Figure 5.)

Kokonaski-999 also does not disclose or render obvious any method of manufacturing, the only use of the word "manufacture" appearing in one isolated sentence. (EX-1004, Kokonaski-999, ¶[[0079] ("Electrical connectively between the right-side portion 1002 and the left-hand portion 1004 of a rimless frame can be accomplished by using conductive elements incorporated into the manufacture of the electro-active lenses 104 and 106.").)

3. Hattori-913 (Ground 5)

Petitioner relies on Hattori-913 for **Ground 5** (claims 1, 2, 5, 6, 12, 13). Hattori-913 is an unexamined Japanese patent application entitled "Eyeglasses with display device" with a translation provided by Petitioner. (*See* EX-1006, Hattori-913.)

A second translation for Hattori-913 has been provided to clarify a passage Petitioner relies upon. (*See* EX-2018, Hattori-913 Second Translation.) This second translation (EX-2018) was produced by a team of two translators. The first translation for Hattori-913 (EX-1006) only indicates that a single translator produced it.

Hattori-913 relates to glasses with electronic elements and a liquid crystal display pasted on the lenses. Hattori-913 uses standard electronic components, such as drive circuits and integrated circuits. Hattori-913 Figure 2 (below) shows lens 1, display 2, frame 3, drive circuit 4, transparent lead 9, lead rubber 10, and wire bundle 11:

Figure 2

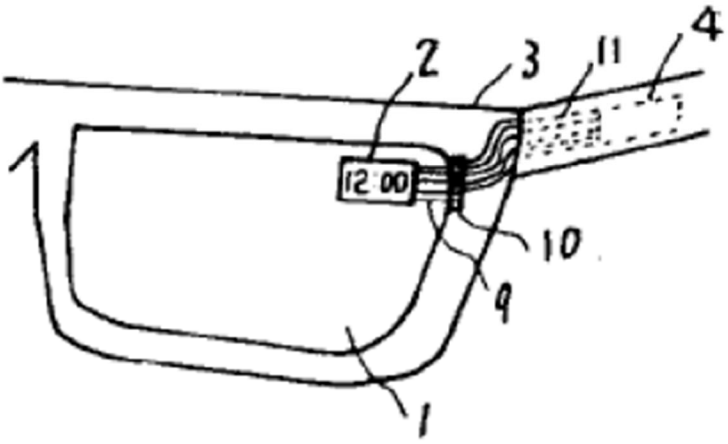

(EX-1006, Hattori-913, Figure 2.)

Unlike the inventions claimed in the '174 patent, Hattori-913 does not disclose or suggest physically constraining electronic components, including integrated circuits, in a fixed position using electrical conductors. Instead, Hattori-913 uses a ZEBRA connector, a common elastomeric interconnection device composed of conductive and non-conductive layers. Hattori-913 is silent as to whether or how any physical restraint of the integrated circuit 18 is accomplished.

As will be discussed in more detail below in Section IV.3 regarding **Ground 5**, *infra*, Petitioner heavily relies upon a translated passage of Hattori-913 to contend that Hattori-913's ZEBRA connector 24 is physically part of the temple itself and therefore also *couples the electronics module* [(Hattori-913's integrated circuit 18)] *to the first temple to constrain the electronics module* as required for claim limitation 1[i]. (*See* Paper 2, 8 ("The integrated circuit 18 is 'connected to zebra connector 24 embedded in the temple,' which also constrains the integrated circuit 18 in the temple 3." (quoting EX-1006, Hattori-913, 68)); EX-1006, Hattori-913, 68 ("CMOS circuit 19 and semiconductor integrated circuit 18 incorporating individual electronic components 20 such as capacitors and transistors are embedded in recess 21 processed in temple 1, and its +1 power terminal 22 is connected to battery 4, while its output terminal group 23 is also connected to zebra connector 24 embedded in the temple.").

This second translation confirms that there is no such physical connection between Hattori-913's ZEBRA connector and temple, and instead that the ZEBRA connector is simply placed inside. (*See* EX-2018, Hattori-913 Second Translation, 68 ("A semiconductor integrated circuit 18 incorporating a subcomponent 20 is incorporated into a recess 21 machined in the temple 1, with its positive and negative power terminals 22 connected to a battery 4, while its output terminal group 23 is connected to a zebra-type connector 24 also incorporated in the temple. It is secured to the semiconductor integrated circuit 18 by a barb 26 thereon.").)

4. Delorenzo (Grounds 6, 7)

Petitioner relies on Delorenzo for **Grounds 6** (§102; claims 1, 2, 4, 9, 12, 13) and **7** (§103; claims 1-4, 9-13). Delorenzo is entitled "Eyeglass frame with hearing aid" and is another patent directed to eyeglasses with hearing aids. As illustrated below, Delorenzo's Figure 1 shows eyeglasses with conventional amplifier 17 within temple 15 connected to battery 18 and hearing tube 19 and earpiece 20:

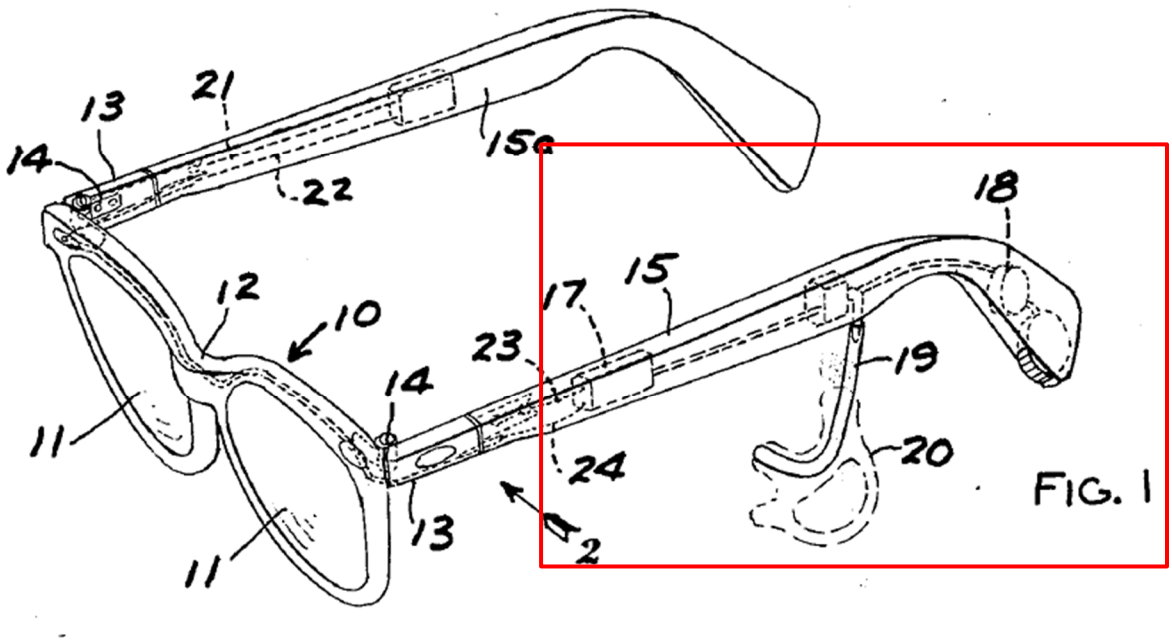

(EX-1007, Delorenzo, Figure 1 (annotations added).)

But unlike the inventions claimed in the '174 patent, Delorenzo is limited to conventional electronic components and techniques. For example, Petitioner fails to show where Delorenzo discloses or suggests an electronics module. Instead, Petitioner points to Delorenzo's temple and general components within without identifying a single individual component Petitioner contends teaches the claimed electronics module. Petitioner points to the temple and nothing more. The '174 patent is further distinguishable from Delorenzo because Delorenzo does not physically restrain its electronic components in a fixed position using electrical conductors.

5. Kokonaski-579 (Ground 8)

Petitioner relies on Kokonaski-579 for **Ground 8** (in view of Kokonaski-999; claims 15-19). Kokonaski-579 is a provisional application to which Kokonaski-999 claims priority. Like Kokonaski-999, Kokonaski-579 does not disclose or render obvious any method of manufacturing.

Kokonaski-579 is missing key limitations recited in the '174 patent claims. For example, Kokonaski-579 does not disclose or render obvious *constraining* an electronic module using conductors. Nor does Kokonaski-579 disclose or render obvious any method of manufacturing. The word "method" only appears in a single sentence within the first paragraph of Kokonaski-579: "The present invention also provides for a low-cost, more reliable method for lens synchronization." (EX-1012, Kokonaski-579, 9.)

6. Howell-596 (Ground 9)

Petitioner relies on Howell-596 for **Ground 9** (in view of Eichelberger and Sikonowiz; claims 15, 16, 18). Howell-596 is a patent application publication directed to electronic circuits used for monitoring radiation such as UV rays. (*See, e.g.,* EX-1015, Howell-596, ¶¶[0003]-[0005].) In view of the "need for improved approaches to measure and inform persons of UV radiation levels," Howell-596

discloses integrated UV detection systems that can be mounted on various vehicles (also referred to as end products). (*Id.*)

In one implementation, the circuit "is provided within eyewear so that the user of the eyewear is able to easily monitor their exposure to radiation." (EX-1015, Howell-596, Abstract.) As illustrated below, Howell-596's Figure 1 shows eyewear with circuit board 112, solar cell 114, UV detector 116, opening 118 (for solar cell 114), opening 120 (for UV detector 116) circuitry 122, and display device 124:

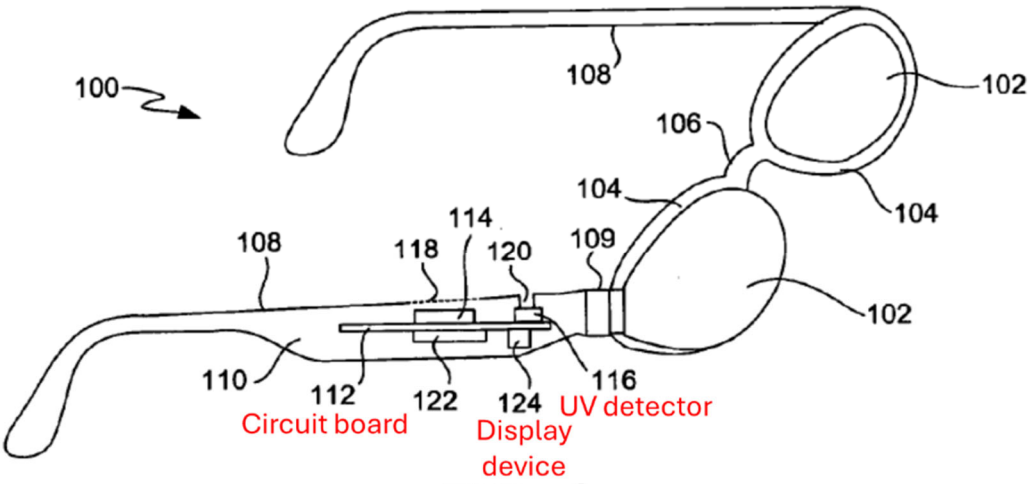

FIG. 1

(EX-1015, Howell-596, Figure 1 (annotations added).)

But eyewear is not the only vehicle on which Howell-596's UV detection system is mounted. Indeed, Howell-596 discloses numerous other options, as illustrated in Figures 23A-23G below. These options include a hat (23A), watch (23B), shirt

(23C), shoe (23D), keychain (23E), bracelet or necklace (23F), and bottle or tube (23G).

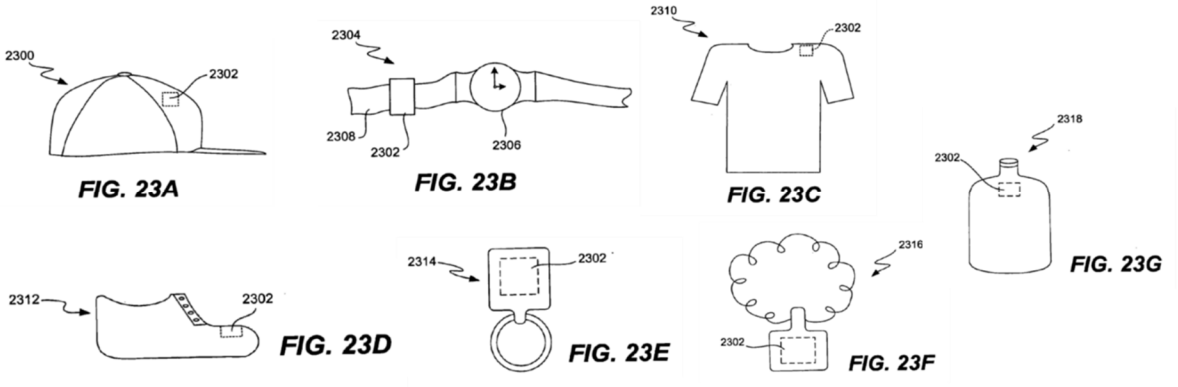

(EX-1015, Howell-596, Figures 23A-23F; *see also id.*, ¶[0232].)

Unlike the inventions claimed in the '174 patent, Howell-596 does not disclose or suggest any methods for making its electronic circuit, eyewear, or UV module as steps or instructions for manufacturing. Furthermore, Howell-596 does not disclose or suggest using a capacitive touch switch in eyewear. Instead, Howell-596 uses a "push-button switch" that can "serve as a reset switch, an on/off switch, or an on (and reset) switch." (EX-1015, Howell-596, ¶[0193].)

7. Eichelberger (Ground 9)

Petitioner relies on Eichelberger for **Ground 9** (in view of Howell-596 and Sikonowiz; claims 15, 16, 18). Eichelberger is a patent directed only to a capacitive touch entry apparatus with a high degree of personal safety. (*See* EX-1010, Eichelberger, Title; 1:6-9.) Eichelberger does not disclose or suggest any connection to

eyewear. Figures 1A and 1B, reproduced below, illustrate a capacitive touch entry panel comprising a substrate or panel of a transparent insulative material, with a surface that is contactable by a body part (e.g., finger), and at least one capacitive touch sensor on an insulative material layer 16:

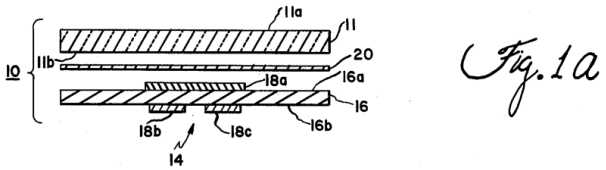

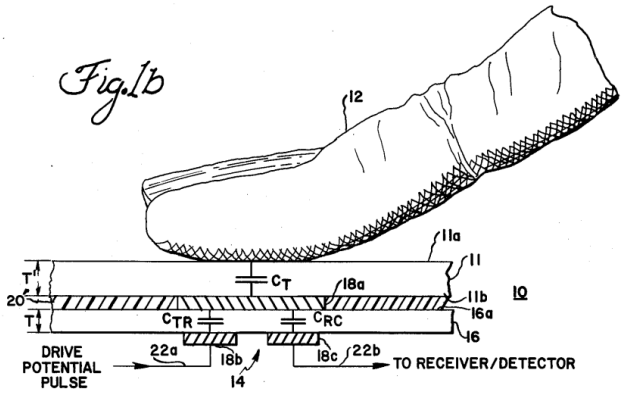

(EX-1010, Eichelberger, Figures 1A and 1B.)

8. Sikonowiz (Ground 9)

Petitioner relies on Sikonowiz for **Ground 9** (in view of Howell-596 and Eichelberger; claims 15, 16, 18). Sikonowiz is a textbook entitled "Designing and Creating Printed Circuits." As the Board recognized, Petitioner includes only chapter nine, which is titled "Final Assembly." (EX-1016, Sikonowiz, 122.) Petitioner's expert, Dr. Feland, explains that Sikonowiz "focuses on designing and manufacturing PCBs." (EX-1002, Feland Decl., ¶39.) The provided chapter includes a

discussion regarding conformal coatings, but nothing in that chapter suggests or provides any direct application to eyewear. (*See generally* EX-1016, Sikonowiz; *see id.*, 122 ("Manual Insertion"), 123 ("Automated Insertion"), 128 ("Soldering"), 128 ("Flux Characteristics"), 130 ("Flux Application"), 131 ("Soldering Equipment"), 133 ("Solder Masks"), 134 ("Clean-Up"), 135 ("Board Testing"), 135 ("Conformal Coating").)

B. Claim 1 is Patentable Because Petitioner's Cited Prior Art Does Not Disclose or Suggest Using Conductors to "Constrain" the Claimed Electronics Module

Petitioner fails to show that independent claim 1 is anticipated or rendered obvious by **Grounds 1** (Brunton § 102), **2** (Brunton § 103), **4** (Kokonaski-999 in view of Brunton), **5** (Hattori-913), **6** (Delorenzo § 102), and **7** (Delorenzo § 103). For each of these grounds, Petitioner fails to show that the cited prior art references, alone or in combination, render obvious limitation 1[i]: "*wherein the first and second electrical conductors are configured to couple the electronics module to the first temple to constrain the electronics module*." In particular, Petitioner fails to show that the prior art discloses or renders obvious *conductors* that *constrain* an *electronics module*, such that the *electronics module* is physically secured by the *conductors* to retain the *module* in a fixed position within the temple. (*See* Section III.B, *supra*

(Petitioner's claim constructions proffered in district court).) Each of these grounds fails for this reason alone.

1. Brunton (Grounds 1 and 2) Does Not Anticipate or Render Obvious Independent Claim 1

Brunton, the only reference asserted under **Grounds 1 and 2**, fails to anticipate or render obvious claim 1 because it does not disclose or suggest limitation 1[i] ("*wherein the first and second electrical conductors are configured to couple the electronics module to the first temple to constrain the electronics module*"). Petitioner argues that Brunton's disclosure of hearing-aid-tubular-contact pins being "frictionally retained" renders the *constrain* limitation obvious. (Paper 2, 20-21 (quoting EX-1003, Brunton, 3:65).) But Petitioner is interpreting *constrain* so broadly that it would include simple friction between touching electronic components. This is wrong and contrary to the intrinsic record of the '174 patent, which emphasizes that *constrain* requires physical security and fixing an item in place, as discussed below.

First, *constrain* as claimed requires that the electrical conductors physically hold the *electronics module* in place by a physical insertion and restrain the module

by applying a force to a surface or component.[1] The '174 patent specification states that *constrain* provides a restraining force to hold the *electronics module* physically in place: "used in this context, 'constrain' may refer to when the first electrical conductor is configured to provide support (***i.e. a restraining force***) for the electronics module to retain the module in a fixed position within the temple. That is, the first electrical conductor may be configured to ***hold the electronics module in place***." (EX-1001, '174 patent, 11:52-57 (emphasis added).) Furthermore, the '174 patent's electrical *conductors* "may be ***inserted through an opening of the electronics module and apply pressure to a surface or a component therein***, which ***thereby restricts the module from being removed*** from the temple or moved within the temple. In this manner, the conductor may hold or restrain one end of the electronics module in place (or substantially in place)." (*Id.*, 11:59-65 (emphasis added).)

---

[1] *See* Section III.B, *supra* (*compare* 1[i] claim language ("*couple the electronics module to the first temple to constrain the electronics module*") *to* Petitioner's proffered construction in the district court case ("physically secure or provide a restraining force to the electronics module to retain the module in a fixed position within the temple")).

Figure 16 of the '174 patent is illustrated below showing a closeup of the eye-wear and the mechanical setup in which the electronics module is physically secured and minor movement is not allowed. As shown, the electrical conductors (107 and 108) and fastener (105) apply a mechanical tightening force (i.e., the force used to clamp or join objects together, indirectly related to the torque applied) to physically secure the electronics module (106):

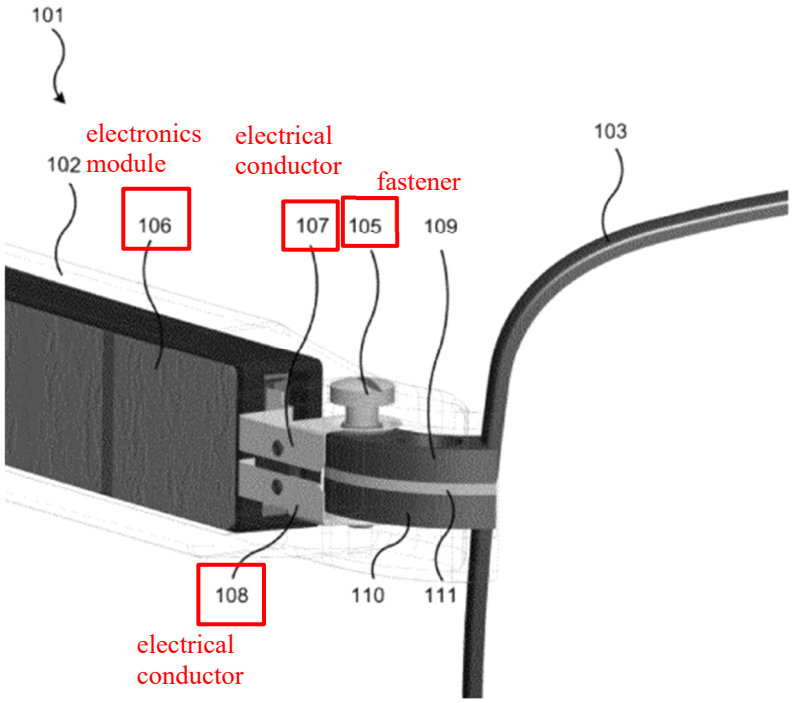

(EX-1001, '174 patent, Figure 16 (annotations added).)

Moreover, the '174 patent distinguishes between the term *constrain* by itself and the phrase "*substantially constrain*," further clarifying that *constrain* requires physical restraint ***and*** no minor movements. As stated by the specification, the

phrase "substantially constrain" allows for "some minor movement of the electronics module within the temple, but the conductor may generally hold the electronics module within the temple in place (such that it remains in an operative position)." (EX-1001, '174 patent, 11:65-12:3.) Moreover, the claim language *substantially* is absent from claim 1 while appearing in claims 8 ("*substantially within the hinge*") and 15 ("*substantially within a temple*").) Hence, the absence of *substantially* from claim 1 is purposeful and the terms *constrained* and *substantially constrained* are distinct and presumed to hold different meanings. *See Bd. of Regents of the Univ. of Tex. Sys. v. BENQ Am. Corp.*, 533 F.3d 1362, 1371 (Fed. Cir. 2008) ("Different claim terms are presumed to have different meanings." (citation omitted)); *In re Varma*, 816 F.3d 1352, 1363 (Fed. Cir. 2016) ("But the principle that the same phrase in different claims of the same patent should have the same meaning is a strong one, overcome only if 'it is clear' that the same phrase has different meanings in different claims." (citations omitted)).

Petitioner's "frictionally retained" argument is also inconsistent with the prosecution history. As shown in the August 23, 2013 response to the May 23, 2013 office action, with respect to limitation 1[i] and references raised the Examiner, Patent Owner stated that "[t]he specification at paragraphs [0074]-[0076] clearly defines a conductor that 'couples' a module to the frame as physically securing or

applying a force to the module, as opposed to simply providing an electrical connection." (EX-2011, '174 patent file history, August 23, 2013, office action response, 152.) Therefore, the prosecution history confirms that *constrain* requires (1) a restraining force and (2) retaining the *electronics module* in a fixed position, and a POSITA would have understood the same. (EX-2015, Oliver Decl., ¶81.) Mere friction, as argued by Petitioner, is not enough.

Importantly, Petitioner relied on these same prosecution history statements in support of its proposed construction in the district court. (*See* EX-2017, Petitioner's Claim Construction Brief, 12-14.) Petitioner should have no reason to reverse course now. *See Source Search Techs LLC* v. *Lending Tree, LLC*, 588 F.3d 1063, 1075 (Fed. Cir. 2009) ("[I]t is axiomatic that claims are construed the same way for both validity and infringement.").

Therefore, *constrain* as claimed is not *substantially constrained* and does not allow for minor movements. Instead, as required by the claim language and the intrinsic record, "*electrical conductors…configured to couple the electronics module to the first temple to constrain the electronics module*" (limitation 1[i]) requires that the *electronics module* be physically held in place in a fixed position.

Second, Petitioner fails to show that Brunton's hearing-aid-contact pins disclose or teach *constraining* the electronics module as required by the '174 patent in

light of the intrinsic evidence discussed above. Petitioner relies on Brunton's disclosure of its contact pins being "frictionally retained," EX-1003, Brunton, 3:65, to support Petitioner's contention that the "socket contacts are coupling the hearing aid unit to the temple and constraining the hearing aid unit" for rendering *constrained* obvious. (Paper 2, 20-21.)[2] But all Petitioner has shown is that the contact pins and sockets touch. Petitioner appears to rely on the assumption that touching implies some amount of frictional force such that all of Brunton's components will experience. *See* Paper 2, 20-21 ("By frictionally retaining the pins of the hearing aid unit in the cavity, the socket contacts are coupling the hearing aid unit to the temple and constraining the hearing aid unit."). But even if that assumption is correct, Petitioner provides no evidence that a POSITA would have understood that Brunton's electrical connections touching as teaching sufficient frictional force to *constrain* an

[2] *See* Ex-1003, Brunton, 3:61-65 ("It will be understood that the units may be provided with any suitable number of contact pins and the sockets provided with a corresponding number of tubular contacts that are positioned to receive the pins and in which the pins are frictionally retained."); *id.*, claim 1 (The contacts being "frictionally retained in said sockets, whereby the contacts and sockets provides means for removing and replacing the unit including component parts of the hearing aid.")

electronics module. Petitioner has not shown that these contact pins *constrain* the hearing aid unit as required by the patent (e.g., applying a tightening force by use of a fastener). And nowhere does Petitioner show that Brunton's "frictionally retained" contact pins *physically secure or provide a restraining force to the hearing aid to retain the hearing aid in a fixed position within the temple* consistent with the construction Petitioner proffered in the district court case. *See* Section III.B, *supra*.

Closer inspection of Brunton demonstrates that its contact pins are simply inserted into sockets and do not physically *constrain* the hearing aid as required by the '174 patent. The ends of unit 17 (which contains the hearing aid) "are provided with contact pins, such as the pins 25 and 26, and these pins are adapted to be inserted in tubular contacts, such as the contacts 27 and 28, in the sockets 19 and 20, respectively, as shown in Figure 6." (Paper 2, 16 (quoting EX-1003, Brunton, 3:57-61).) Petitioner has merely shown that the hearing-aid-contact pins are inserted into contacts and touching; Petitioner has not shown that these contact pins disclose or suggest providing a restraining force to *constrain* the hearing aid and physically hold it in place. Brunton Figure 6 below is illustrated below showing hearing aid unit 17 (orange) with pins 25 and 26 (red) inserted into tubular contacts 27 and 27 (green) and sockets 19 and 20 (blue).

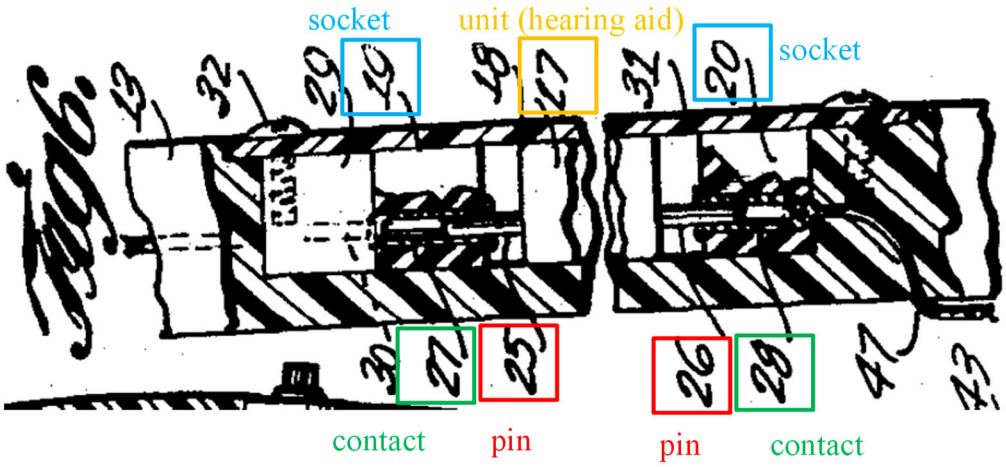

(EX-1003, Brunton, Figure 6 (annotations added).)

Petitioner has not shown—nor does Brunton disclose, teach, or suggest—that Brunton's electrical conductors *constrain* the hearing aid unit and physically hold it in place in a fixed position. Brunton instead (in a passage that Petitioner failed to address) discusses a cover plate to physically secure only the sockets: "[t]he sockets for the transistor and unit, such as the sockets 1 and 20, may be frictionally held in the cavity or may be embedded in the material of the temple, as may be desired. In the design shown, the temple is provided with a cover plate 31 that is secured in position over the unit 17 and the transistor 29 with screws 32." (EX-1003, Brunton, 3:71-4:1.) Hence a POSITA would have understood that Brunton teaches using a cover plate—***not*** contact pins or socket contacts—for holding Brunton's

components in place. (EX-2015, Oliver Decl., ¶87.) Neither Petitioner nor Dr. Feland addresses this passage or Brunton's use of a cover plate and screws for physically securing its components. (*See* Paper 2, 20-21; EX-1002, Feland Decl., ¶64.) Brunton's Figure 7, shown below, demonstrates this cover plate (orange) secured with a screw (red) to the temple (blue):

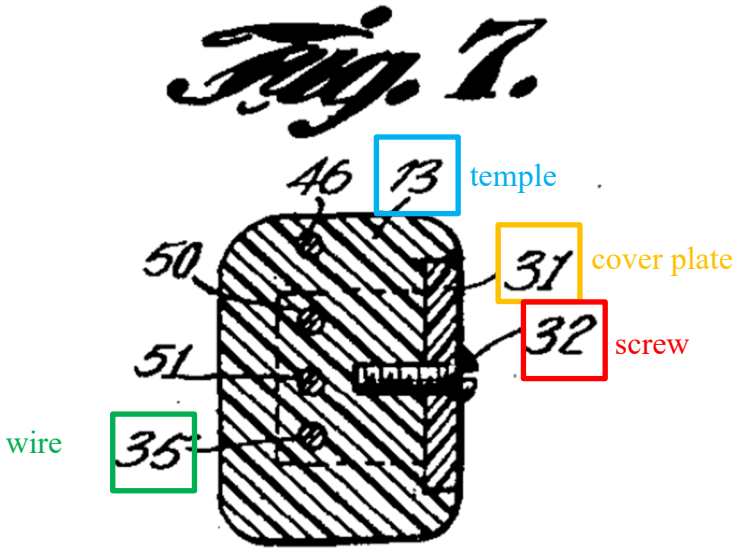

(EX-1003, Brunton, Figure 7 (annotations added).)

Brunton does not otherwise disclose or suggest that its contact pins are *constraining* anything and physically holding them in place. (*See* EX-1003, Brunton, 3:30-33 ("Figure 7 is a cross section through one of the temples taken on line 77 of Figure 2 showing the contact pins and sockets whereby the hearing aid unit is removable and replaceable.").) Therefore, not only has Petitioner not shown that Brunton's contact pins are actually physically constraining the hearing aid unit as

the '174 patent requires its *conductors* to *constrain* the *electronics module*, but further review of Brunton confirms that at best the only parts that are physically constraining anything as required by the patent are traditional cover plates and screws.

If anything, a POSITA would have understood that Brunton's cover plate and screws teach away from constraining the hearing aid using anything but the cover plate and screws. *See In re Haruna*, 249 F.3d 1327, 1335 (Fed. Cir. 2001) ("A reference may be said to teach away when a person of ordinary skill, upon reading the reference would be led in a direction divergent from the path that was taken by the applicant."). A POSITA would have otherwise found said cover plate and screws to be superfluous parts if Brunton's contact pins were the components physically securing the hearing aid to the temple. (EX-2015, Oliver Decl., ¶90.). Nothing in Brunton otherwise discloses or suggests that the conductors are used to physically restrain a device such as a hearing aid.

Accordingly, Petitioner fails to show that Brunton discloses or renders obvious the "*wherein the first and second electrical conductors are configured to couple the electronics module to the first temple to constrain the electronics module*" (1[i]) limitation recited in the challenged claim 1 of the '174 patent. Therefore, Petitioner cannot succeed against claim 1 on **Grounds 1-2** and the challenged claim patentable. Furthermore, Petitioner's failure to demonstrate claim 1 is anticipated or rendered

obvious means that Petitioner also fails to show the same for dependent claims 2-4, 9, and 12 under **Grounds 1-2**.

2. Kokonaski-999 in View of Brunton (Ground 4) Does Not Render Claim 1 Obvious

Petitioner also fails to show that Kokonaski-999 in view of Brunton renders claim 1 obvious under **Ground 4**. Because Petitioner fails to show that Kokonaski-999 in view of Brunton teaches independent claim 1, **Ground 4** also fails to demonstrate that Kokonaski-999 in view of Brunton renders obvious dependent claims 2, 4-6, 9, 12, and 14.

As explained above, Petitioner fails to show that Brunton renders claim 1 obvious and in particular limitation 1[i] ("*wherein the first and second electrical conductors are configured to couple the electronics module to the first temple to constrain the electronics module*"). Petitioner does not show that adding Kokonaski-999 makes up for this gap and even admits that Kokonaski-999 does not address *constraining*. (*See* Paper 2, 35 (quoting EX-1004, Kokonaski-999, ¶[0033]) ("Kokonaski-999 discloses that 'the electronic module 202 can be positioned within the frame 102 (e.g., in an area or cavity of the frame 102) and can be removable and replaceable.' However, Kokonaski-999 ***does not disclose or suggest any way to constrain electronic module in the cavity*** until the user decides to remove it.") (emphasis added; emphasis removed)).) Instead, Petitioner has simply pointed to the module

in Kokonaski-999 being removable and replaceable. Petitioner has not shown that Kokonaski-999's conductors *constrain* the *electronics module* such that the module is physically held in place as required by the '174 patent claims. (*See, e.g.,* EX-1001, 19:26-30 ("[T]he portion 117 comprises an opening through which a fastener (not shown) is inserted through to hold the side of the exemplary electronics module 106 (i.e. the side opposite the one coupled by the portions 115 and 116 of the electrical conductors 107 and 108) in place." (emphasis added)).)

Unable to show that Kokonaski-999 discloses or suggests limitation 1[i], Petitioner further argues that a POSITA would have been motivated to combine Kokonaski-999 with Brunton because a "POSITA would have been motivated by Kokonaski-999's disclosure of pins as the electronic module's 'first contacts' because they provide a basis for constraining the electronics module in the temple via sockets." (Paper 2, 36.) In other words, Petitioner again applies its flawed analysis of Brunton's hearing-aid-tubular-contact pins being "frictionally retained" for the *constraining* limitation to Kokonaski-999 as well.[3] As previously explained, Petitioner

[3] *See* Paper 2, 36 ("[G]iven the fact that the first contacts 504 are tubular pins that protrude from the end of the housing 502 suggests to a POSITA that their purpose is to be received into the temple in, e.g., tubular sockets such as Brunton's.").

fails to show that Brunton's hearing-aid-contact pins render obvious *constraining* an electronics module as required by the '174 patent. For example, a POSITA would not have been motivated to combine teachings of Brunton and Kokonaski-999 to use sockets to secure an *electronics module*, because Brunton already teaches using a cover plate and screws to secure its components. (EX-2015, Oliver Decl., ¶95.) Again, neither Petitioner nor Dr. Feland addresses Brunton's use of a cover plate and screws for securing its components.

At best, Petitioner shows that Brunton's contact pins and sockets touch, but not that the pins physically constrain the hearing aid such that the hearing aid is physically held in place by the pins themselves (and not the cover plate described in Brunton Figure 7). Petitioner has not otherwise made up for this deficiency by pointing to Kokonaski-999 disclosing pins. Nor has Petitioner shown that Brunton's or Kokonaski-999's contact pins *physically secure or provide a restraining force to the hearing aid to retain the hearing aid in a fixed position within the temple* consistent with the construction Petitioner proffered in the district court case. *See* Section IV.B.1, *supra*.

Accordingly, Petitioner fails to show that Kokonaski-999 in view of Brunton renders obvious the "*wherein the first and second electrical conductors are configured to couple the electronics module to the first temple to constrain the electronics*

module" (1[i]) limitation recited in the challenged claim 1 of the '174 patent. Therefore, Petitioner cannot succeed against claim 1 on **Ground 4** and the challenged claim patentable. Furthermore, Petitioner's failure to demonstrate claim 1 is rendered obvious means that Petitioner also fails to show the same for dependent claims 2, 4-6, 9, 12, and 14 under **Ground 4**.

3. Hattori-913 (Ground 5) Does Not Render Claim 1 Obvious

Petitioner also fails to show that Hattori-913, an unexamined Japanese patent application and the basis for **Ground 5**, renders claim 1 obvious. And because Petitioner fails to show that Hattori-913 teaches independent claim 1, **Ground 5** also fails to demonstrate that Hattori-913 renders obvious dependent claims 2, 5, 6, 12, and 13. As previously discussed, a second translation for Hattori-913 has been produced by a team of two translators to clarify a passage Petitioner relies upon. (*See* EX-2018, Hattori-913 Second Translation.) The first translation for Hattori-913 (EX-1006) only indicates that a single translator produced it.

For limitation 1[i] ("*wherein the first and second electrical conductors are configured to couple the electronics module to the first temple to constrain the electronics module*"), Petitioner relies on Hattori-913's ZEBRA connector as purportedly rendering the *constraining* limitation obvious. But Petitioner fails to show that Hattori-913's "zebra connector" (i.e., trademarked ZEBRA elastomeric (or rubber-

like) connectors) connected to an integrated circuit teaches *constraining* an electronics module as claimed by the '174 patent. Petitioner states that "zebra connector 18 [24] is an elastomeric material that applies pressure to the output terminal group 23 by compressing against it, establishing a secure electrical connection and also coupling the integrated circuit to the temple to retain it in a fixed position." (Paper 2, 50-51.) There are numerous issues with Petitioner's arguments.

First, as Petitioner explains, a ZEBRA elastomeric connector is a common interconnection device used in electronics that implements alternating conductive and non-conductive layers. (*See* Paper 2, 38-39 ("A zebra connector is a well-known electrical connector composed of alternating layers of conductive and insulating materials, usually rubber or elastomeric matrix, which allows the connector to transmit multiple electrical signals while maintaining excellent electrical conductivity and mechanical stability.").) Contrary to Petitioner's argument, an elastomeric material applying pressure to keep conductive parts in contact would *not* have disclosed or suggested to a POSITA any mechanism for *constraining* a *module* as required by the claims and Petitioner's own district court construction.[4] All Petitioner's evidence

[4] *See* Section IV.B.1, *supra* (*compare* 1[i] claim language ("*couple the electronics module to the first temple to constrain the electronics module*") *to* Petitioner's

shows is that Hattori-913's ZEBRA connector makes conductive parts touch and maintain contact. This does not disclose or render obvious *constraining* Hattori-913's integrated circuit by restraining it in place, as required by the '174 patent claims.

Second, Petitioner assumes (but does not show) that ZEBRA connector 24 is part of the temple itself. Based on this faulty assumption, Petitioner asserts (but does not show) that ZEBRA connector 24 must therefore *couple* integrated circuit 18 to the *first temple.* From its arguments for limitation 1[f]/1[h],[5] Petitioner contends that the "zebra connector is 'embedded in the temple,' and thus is coupled to the temple." (Paper 2, 47; *see also* 1006, Hattori-913, 68 ("CMOS circuit 19 and semiconductor integrated circuit 18 incorporating individual electronic components 20 such as capacitors and transistors are embedded in recess 21 processed in temple 1, and its +1 power terminal 22 is connected to battery 4, while its output terminal group 23 is

---

proffered construction in the district court case ("physically secure or provide a restraining force to the electronics module to retain the module in a fixed position within the temple")).

[5] 1[f]/1[h] (*wherein a first/second conductive path is provided from the first temple to the lens housing at least in part by the first/second electrical conductor*).

also connected to zebra connector 24 embedded in the temple.").) But Petitioner is stretching the word "embedded" from its translation to imply that Hattori-913's ZEBRA connector is physically restrained or bound to the temple (or "coupled") when there is no such disclosure or teaching from Hattori-913. Instead, Hattori-913 merely discloses placing its ZEBRA connector in the temple, rather than physically restraining or binding one to the other.

To demonstrate that the ZEBRA connector is merely placed within the temple (and not physically restrained or bound), a second translation of Hattori-913 confirms that Petitioner is misinterpreting "embedded" to indicate the ZEBRA connector is physically bound to the temple. This second translation of Hattori-913 states that the "semiconductor integrated circuit 18 incorporating a subcomponent 20 is incorporated into a ***recess 21*** machined in the temple 1," and "output terminal group 23 is connected to a zebra-type connector 24 also ***incorporated in the temple***." (EX-2018, Hattori-913 Second Translation, 68 (emphasis added).) In other words, accurately translated, Hattori-913's integrated circuit 18 (and zebra-type connector 24) are simply placed (or "incorporated") in temple recess 21 and not physically restrained as Petitioner contends from the word "embedded" from its first translation. A POSITA, therefore, would have understood that that Hattori-913's ZEBRA conductor is not physically constrained to the temple when it is simply placed within

it. (EX-2015, Oliver Decl., ¶¶103-105.) Furthermore, as shown in Hattori-913's Figure 6 below, ZEBRA connector 24 is illustrated as placed ("incorporated") within the temple of frame 11. It is not otherwise physically linked to the frame:

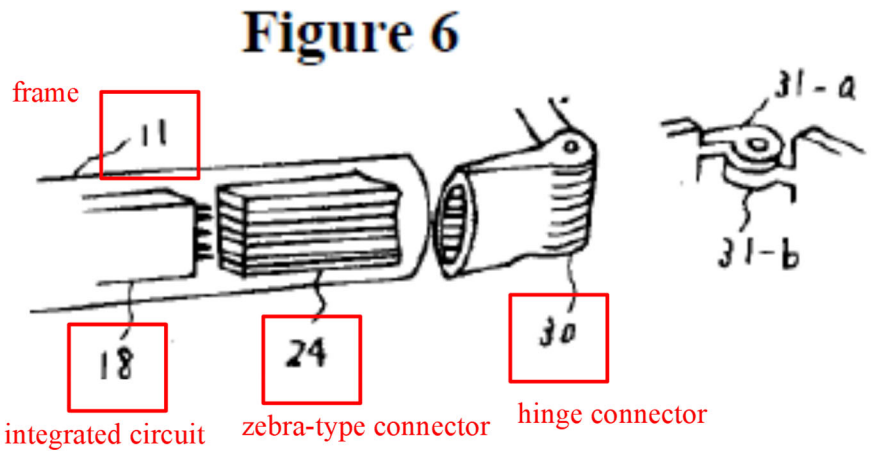

(EX-1006, Hattori-913, Figure 6.)

Third, Petitioner has not shown that Hattori-913 discloses or suggests that *conductors* are *constraining* Hattori-913's integrated circuit, as required by claim 1. Petitioner cites nothing from Hattori-913 that discloses or suggests use of conductors to restrain the integrated circuit. At best, Petitioner has merely shown that an elastomeric material (i.e., a flexible or rubber-like material) keeps conductors in contact. (*See* Paper 2, 51 (quoting EX-1006, Hattori-913, 6:50-53) ("Zebra connectors 'make reliable connections by exerting pressure between contacting surfaces.'").) Petitioner has not anything is actually *constraining* Hattori-913's integrated circuit 18 (the contended *electronics module*), let alone whether such *constraint* is by a

conductor as required by the '174 patent claims. (*See also* Section IV.A.1, *supra* (Petitioner's proffered construction: "physically secure or provide a restraining force to the electronics module to retain the module in a fixed position within the temple").) At best, Petitioner shows that contact pins from integrated circuit 18 are inserted into ZEBRA connector 24. But all of these components are simply placed in frame 11, and there is no indication from Hattori-913 that they are physically held in place by any other components, such as, for example, a fastener. Petitioner does not otherwise identify any disclosure or suggestion that the contact pins *constrain* those components. And critically, Petitioner has not shown anything that discloses or suggests *constraining* integrated circuit 18 as required by the '174 patent.

Accordingly, Petitioner fails to show that Hattori-913 renders obvious the "*wherein the first and second electrical conductors are configured to couple the electronics module to the first temple to constrain the electronics module*" (1[i]) limitation recited in the challenged claim 1 of the '174 patent. Therefore, Petitioner cannot succeed against claim 1 on **Ground 5** and the challenged claim is patentable. Furthermore, Petitioner's failure to demonstrate claim 1 is rendered obvious means that Petitioner also fails to show the same for dependent claims 2, 5, 6, 12, and 13 under **Ground 5**.

4. Delorenzo (Grounds 6 and 7) Does Not Anticipate or Render Obvious Claim 1

Petitioner also fails to show that Delorenzo, the basis for **Grounds 6-7**, anticipates or renders obvious claim 1. And because Petitioner fails to show Delorenzo discloses or teaches independent claim 1, **Grounds 6-7** also fail to demonstrate that Delorenzo discloses or renders obvious dependent claims 2-4 and 9-13.

For limitation 1[d] ("*an electronics module disposed at least partially within the first temple*"), Petitioner relies on Delorenzo's temples and general electronic components but never identifies any disclosure that teaches or suggests the claimed *electronics module*. Petitioner states that "Delorenzo discloses that electronic components are housed in temple 15 of its eyewear, as shown in Figure 3." (Paper 2, 56.) Delorenzo Figure 3 is shown below with Petitioner's annotations. But nowhere does Petitioner identify an alleged electronics module in Figure 3 (or Figure 2):

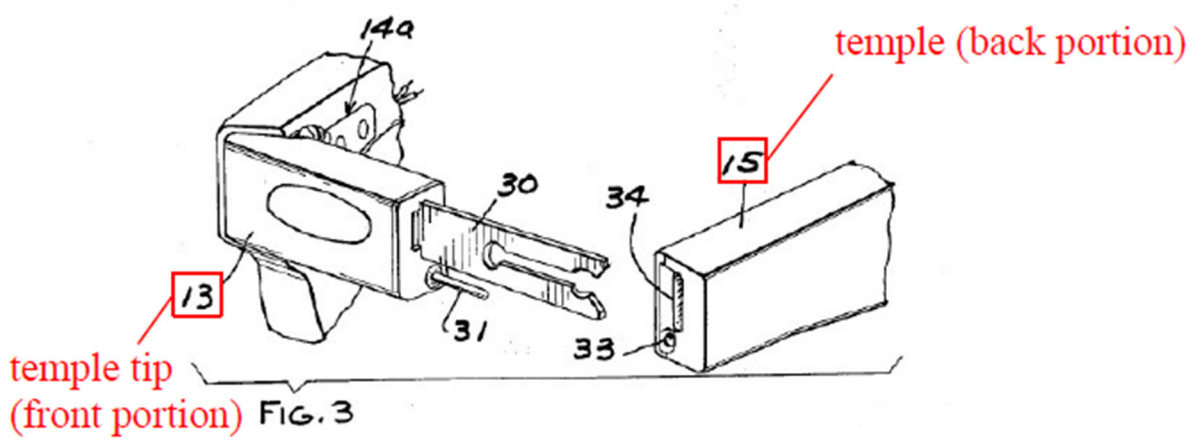

(EX-1007, Delorenzo, Figure 3 (annotations by Petitioner).)

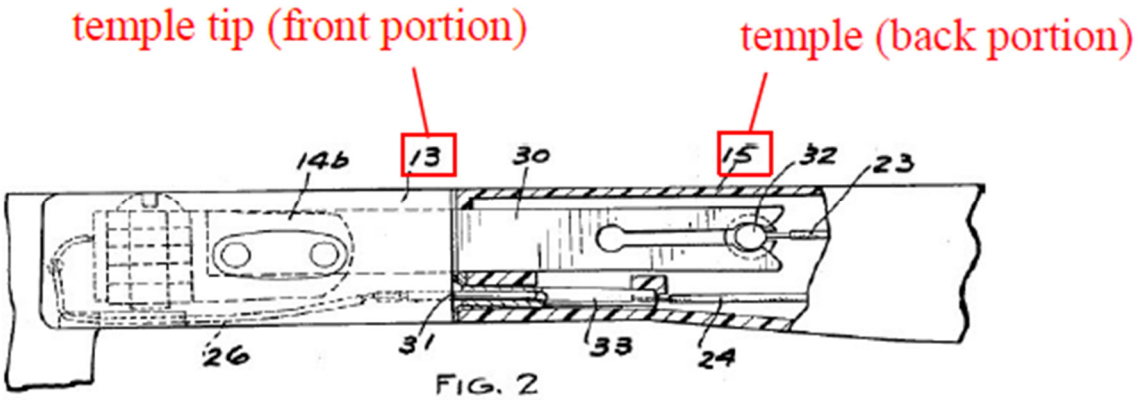

(EX-1007, Delorenzo, Figure 2 (annotations by Petitioner).)

The closest Petitioner comes to identifying a purported *electronics module* is when asserting that "[o]ne of the temples 15a is provided with a microphone element 16 while the other has an amplifier element 17 removably embedded therein…Accordingly, temple 15 is an electronics module disposed at least partially within the fully assembled temple of the eyewear (temple tip 13 plus temple 15)." (Paper 2, 57 (quoting EX-1007, Delorenzo, 2:9-11).) But Petitioner does not specifically identify what the *electronics module* disposed in the temple is, beyond generally pointing to the temple itself and general components within. By just pointing to the temple, Petitioner fails to show that Delorenzo anticipates or renders obvious limitation 1[d] ("*an electronics module disposed at least partially within the first temple*") under Grounds 6-7.

In addition to the issues outlined above for limitation 1[d], Petitioner also fails to show that Delorenzo discloses or renders obvious limitation 1[i] ("*wherein the first and second electrical conductors are configured to couple the electronics module to the first temple to constrain the electronics module*"). Petitioner simply states that "each temple is mechanically and electrically interconnected to the other through the eyeglass frame front." (Paper 2, 60 (quoting EX-1007, Delorenzo, 2:54-56 (emphasis removed)).) Hence, Petitioner's failure to clearly identify any teaching of an *electronics module* in Delorenzo is exacerbated by its failure to identify conductors that *constrain* said (unidentified) *electronics module* or any other electrical components. Petitioner's attempts to handwave this limitation away by pointing to general electronic components fails to demonstrate Delorenzo discloses or renders obvious limitation 1[i]. (*See* Paper 2, 60 ("The electrical conductors at the front portion of the temple (temple tip 13) extend into and mechanically constrain the electronics module (temple 15) containing the electronic components."); *see also* EX-1007, Delorenzo, 2:44-46 ("[T]the bifurcated element 30 extends through passage 34 and mechanically connects onto post 32."), 2:49-54 ("connection between connectors 31, 33") (quoted by Paper 2, 60).)

Accordingly, Petitioner fails to show that Delorenzo discloses or renders obvious limitations 1[d] ("*an electronics module disposed at least partially within the*

first temple") and 1[i] ("*wherein the first and second electrical conductors are configured to couple the electronics module to the first temple to constrain the electronics module*") recited in the challenged claim 1 of the '174 patent. Therefore, Petitioner cannot succeed against claim 1 on **Grounds 6-7** and the challenged claim is patentable. Furthermore, Petitioner's failure to demonstrate claim 1 is anticipated or rendered obvious means that Petitioner also fails to show the same for dependent claims 2-4 and 9-13 under **Grounds 6-7**.

C. Dependent Claims 2-14 Are Patentable Because Petitioner Fails to Show that Any of Grounds 1-7 Render Obvious Independent Claim 1

As discussed above, because Petitioner fails to demonstrate that Brunton (**Grounds 1-2**), Kokonaski-999 (**Ground 4**), Hattori-913 (**Ground 5**), or Delorenzo (**Grounds 6-7**) anticipate or render obvious claim 1, Petitioner further fails to demonstrate that these references anticipate or render obvious claims 2-14, all of which depend from claim 1. This includes claims 2, 4, 9, and 12 under **Ground 1** (Brunton § 102), claims 2-4, 9, and 12 under **Ground 2** (Brunton § 103), claims 7, 8, and 13 under **Ground 3** (Brunton in view of Carling), claims 2, 4-6, 9, 12, and 14 under **Ground 4** (Kokonaski-999 in view of Brunton), claims 2, 5, 6, 12, and 13 under **Ground 5** (Hattori-913), claims 2, 4, 9, 12, and 13 under **Ground 6** (Delorenzo § 102), and claims 2-4 and 9-13 under **Ground 7** (Delorenzo § 103).

For **Ground 3** (Brunton in view of Carling), Petitioner does not rely on Carling to render claim 1 obvious in addition to the arguments it previously made under **Grounds 1-2** in reliance on Brunton and the *constrain* limitation from 1[i] discussed above. Therefore, Petitioner's reliance on Carling under **Ground 3** does not make up for Petitioner's deficiencies in showing claim 1 is anticipated or rendered obvious by Brunton under **Grounds 1** and **2**. Therefore, **Ground 3** (Brunton in view of Carling; claims 7, 8, and 13) fails as well because Petitioner fails to show claim 1 or any of the dependent claims are rendered obvious by Brunton (**Grounds 1-2**) or Brunton in view of Carling (**Ground 3**).

D. Claim 15 Is Patentable Because Petitioner's Cited Prior Art Does Not Disclose or Suggest the Claimed Method Steps

Petitioner fails to show that claim 15 is rendered obvious under **Grounds 8** (Kokonaski-999 in view of Kokonaski-579) and **9** (Howell-596 in view of Eichelberger and Sikonowiz). For **Grounds 8 and 9**, Petitioner fails to show at least the preamble limitation of claim 15 ("*[a] first method*") is rendered obvious, and for this reason fails to show that each and every limitation is taught. *See TorPharm, Inc. v. Ranbaxy Pharmaceuticals, Inc.*, 336 F.3d 1322, 1327, (Fed. Cir. 2003) ("[T]here are no per se rules relating the patentability of product and process in either direction…a process yielding a well-known product may yet be nonobvious.") (citation omitted).

1. Kokonaski-999 in View of Kokonaski-579 (Ground 8) Does Not Render Claim 15 Obvious

Petitioner fails to show that Kokonaski-999 in view of Kokonaski-579 renders claim 15 obvious under Ground 8. And because Petitioner fails to show Kokonaski-999 in view of Kokonaski-579 teaches independent claim 15, **Ground 8** also fails to demonstrate that Kokonaski-999 in view of Kokonaski-579 renders obvious dependent claims 16-19.

As stated in the preamble, claim 15 requires "[a] first ***method***." Petitioner glosses over this limitation and does not formally address it in its arguments. (*See* Paper 2, 70-78.) Nowhere does Petitioner show where Kokonaski-999 or Kokonaski-579 teach or suggest performance of a *method*, such as manufacturing steps or instructions, for limitations 15[a] (*providing a capacitive touch switch*), 15[b] (*disposing a plurality of electronic components on the capacitive switch*), and 15[c] (*coupling the capacitive touch switch to a partial enclosure to constrain the capacitive touch switch*). Nor does Petitioner explain how a POSITA would have understood that Kokonaski-999 or Kokonaski-579 teach or suggest performance steps for a method as required by the claim.

Accordingly, Petitioner fails to show that Kokonaski-999 in view of Kokonaski-579 renders obvious the preamble limitation "*[a] first method*" as recited in the challenged claim 15 of the '174 patent. Therefore, Petitioner cannot succeed

against claim 15 on **Ground 8** and the challenged claim is patentable. Furthermore, Petitioner's failure to demonstrate claim 15 is rendered obvious means that Petitioner also fails to show the same for dependent claims 16-19 under **Ground 8**.

2. Howell-596 in View of Eichelberger (Ground 9) Does Not Render Claim 15 Obvious

Petitioner fails to show that Howell-596 in view of Eichelberger and Sikonowiz, the bases for **Ground 9**, render claim 15 obvious. And because Petitioner fails to show Howell-596 in view of Eichelberger and Sikonowiz teaches independent claim 15, **Ground 9** also fails to demonstrate that Howell-596 in view of Eichelberger and Sikonowiz renders obvious dependent claims 16 and 18.

First, as previously explained for Ground 8, claim 15 requires *"[a] first **method**."* Petitioner fails to address this requirement and does not show where in Howell-596 or Eichelberger a *method* such as manufacturing steps or instructions is taught or suggested. (*See* Paper 2, 81-84.) Petitioner claims that Howell-596 "shows in Figure 16D a method of making a UV detection module." (Paper 2, 82.) But this is not true. None of the materials Petitioner points to (paragraphs [0181], [0188]-[0191] and Figure 16D) even mention a method. The word "method" appears in only ***two*** unrelated and irrelevant passages in the body of Howell-596 (excluding the titles of other references). (*See id.*, [0009], [0238].) "Method" does not even appear in the

body of Eichelberger. Petitioner has completely ignored this requirement and thus fails to show that each and every limitation of claim 15 is rendered obvious.

Second, a POSITA would not have been sufficiently motivated to combine Howell-596 with Eichelberger. Howell-596 is primarily about an "electronic circuit [with] radiation monitoring capability, and "[i]n one implementation, the electronic circuit is provided within eyewear so that the user of the eyewear is able to easily monitor their exposure to radiation." (EX-1015, Howell-596, Abstract.) Petitioner relies on Eichelberger for disclosing a capacitive touch switch and claims a POSITA would have found combining these two references obvious. (*See* Paper 2, 82 ("Eichelberger's capacitive touch switch includes a double-sided printed circuit board 16 on which electrodes 18b and 18c are fabricated."); *see also* EX-1010, Eichelberger, Abstract (A "capacitive touch entry structure [that] utilizes an array of at least one capacitive touch sensor" on a printed circuit board.).) Not so.

Petitioner points to Howell-596 Figure 16D and paragraphs [0181], [0188]-[0191] and [0193] for "a method of making a UV detection module by coupling a switch 1664 with a substrate (e.g., printed circuit board (PCB)) and electrical circuitry 1508," and a "variety of switches to use." (Paper 2, 82.) Petitioner further points to incorporated reference (U.S. Provisional Application No. 60/583,169 and section "Eyeglasses with User Input Capability") and argues that at a POSITA

"would have been motivated to combine Howell-596 with Eichelberger because Howell-596 discloses using a capacitive touch switch to control the UV detection system in its glasses." (*Id.*, 83.)

A POSITA would not have been motivated to combine a capacitive touch switch with Howell-596's UV detection system or radiation-detection glasses as argued by Petitioner. Howell-596 states "[a]s shown in FIG. 16D, the switch base 1662 can attach to the substrate 1502 and thereby support the switch 1664 that protrudes outside of the eyewear housing 1660 (or is otherwise accessible) so that a user can activate the switch (e.g., press the button)." (*See also* EX- Howell-596, [0193] ("One type of switch is a button switch, such as a push-button switch. As an example, the switch can serve as a reset switch, an on/off switch, or an on (and reset) switch.").) A POSITA would have understood that a mechanical button switch, as taught, would have been a more reliable solution for Howell-596's glasses both in terms of energy use and efficiency and functional reliability. A POSITA, thus, would not have been motivated to implement the added expense and complication of a capacitive touch switch for Howell-596's glasses when the same would not have needed or desired such a change in the first place. Petitioner has therefore failed to show that a POSITA would have been sufficiently motivated to combine Howell-596 and Eichelberger.

Accordingly, Petitioner fails to show that Howell-596 in view of Eichelberger renders obvious the preamble limitation "*[a] first method*" as recited in the challenged claim 15 of the '174 patent. Therefore, Petitioner cannot succeed on **Ground 9** against claim 15 and the challenged claim is patentable. Furthermore, Petitioner's failure to demonstrate claim 15 is rendered obvious means that Petitioner also fails to show the same for dependent claims 16 and 18 under **Ground 9**.

E. Dependent Claims 16-19 Are Patentable Because Petitioner Fails to Show that Grounds 8 or 9 Render Obvious Independent Claim 15

Because Petitioner fails to demonstrate that Kokonaski-999 in view of Kokonaski-579 or Howell-596 in view of Eichelberger render obvious claim 15, Petitioner further fails to demonstrate that these references render obvious dependent claims 16-19. This includes dependent claims 16-19 under **Ground 8** (Kokonaski-999 in view of Kokonaski-579) and dependent claims 16 and 18 under **Ground 9** (Howell-596 in view of Eichelberger and Sikonowiz).

1. Petitioner Fails to Establish that a POSITA Would Have Been Motivated to Combine Howell-596 and Eichelberger (Ground 9) to Render Claim 16 Obvious

In addition to the above, a POSITA would not have been sufficiently motivated to combine Howell-596 with Eichelberger to render claim 16 obvious. Claim 16 adds the following additional limitation: "*[t]he first method of claim 15, further*

comprising the step of disposing the enclosure substantially within a temple of an eyeglass frame." Howell-596 is primarily about an "electronic circuit [with] radiation monitoring capability," not fashionable eyewear with electronic capabilities. (EX-1015, Howell-596, Abstract.)

Although one embodiment happens to have "the electronic circuit is provided within eyewear so that the user of the eyewear is able to easily monitor their exposure to radiation," EX-1015, Howell-596, Abstract, a POSITA would have understood that Howell-596 is primarily about electronic circuits and radiation monitoring. Not "the inclusion of electronics [to] not limit the fashion design of the eyeglass frame or limit the materials of eyeglass frame." (EX-1001, '174 patent, 1:27-28.) Or a "coupling the capacitive touch switch to a partial enclosure to constrain the capacitive touch switch." (EX-1001, '174 patent, claim 15[c].) Eichelberger, a reference Petitioner relies on for a capacitive touch switch, does not change this. A POSITA therefore would have not found Howell-596 to be an analogous reference to the fashionable-electronic eyewear of the '174 patent in the first place.

In its brief, Petitioner simply states that "Howell-596 disclose[s] this limitation [(claim 16)]" and points to Figure 17B with "module housing 1700 (with internal electrical components) '[] contained by the eyewear housing 1720.'" (Paper 2, 84-85.) Petitioner does not further address method claim 16 and the additional step

of actually "*disposing the enclosure substantially within a temple of an eyeglass frame*." Accordingly, Petitioner further fails to show that Howell-596 in view of Eichelberger renders obvious the challenged claim 16 ("*The first method of claim 15, further comprising the step of disposing the enclosure substantially within a temple of an eyeglass frame*.") of the '174 patent. Therefore, Petitioner cannot succeed on **Ground 9** (Howell-596 in view of Eichelberger and Sikonowiz) for this additional reason, and the challenged claims are patentable.

2. Petitioner Fails to Establish that Dependent Claim 18 is Rendered Obvious Under Ground 9

Claim 18 ("*The first method of claim 15, further comprising the step of applying a conformal coating to the plurality of electronic components*.") under **Ground 9** is the only basis Petition relies on Sikonowiz for. Sikonowiz is a textbook entitled "Designing and Creating Printed Circuits," and Petitioner includes only chapter nine, "Final Assembly," as part of Ground 9. (*See* Paper 2, 85-86; EX-1016, Sikonowiz, 122.) Petitioner relies on Sikonowiz for "applying a conformal coating as a well-known step of final PCB assembly." (Paper 2, 85.)

The provided chapter 9 of Sikonowiz includes a discussion regarding conformal coatings. Petitioner contends that "Sikonowiz expressly motivates applying a conformal coating to a PCB like that in Howell-596 to prevent moisture and contaminants from affecting the PCB's electronics." (Paper 2, 86.) But nothing in

Sikonowiz suggests or provides any direct application to eyewear or electronics in eyewear and Petitioner does not explain how a POSITA would have been motivated to apply Sikonowiz to the same. (*See* EX-1016, Sikonowiz, 122 ("Manual Insertion"), 123 ("Automated Insertion"), 128 ("Soldering"), 128 ("Flux Characteristics"), 130 ("Flux Application"), 131 ("Soldering Equipment"), 133 ("Solder Masks"), 134 ("Clean-Up"), 135 ("Board Testing"), 135 ("Conformal Coating").) Petitioner does not otherwise rely on Sikonowiz to make up for its deficiencies in rendering independent claim 15 (from which claim 18 depends on) obvious.

Accordingly, Petitioner further fails to show that Howell-596 in view of Eichelberger and Sikonowiz renders obvious the challenged claim 18 ("*The first method of claim 15, further comprising the step of applying a conformal coating to the plurality of electronic components*.") of the '174 patent. Therefore, Petitioner cannot succeed on **Ground 9** (Howell-596 in view of Eichelberger and Sikonowiz) for this additional reason and the challenged claims are patentable.

V. CONCLUSION

For the foregoing reasons, the Board should find all challenged claims of the '174 patent patentable.

Date: March 31, 2025

Respectfully submitted,

KING & SPALDING LLP

BY: /*Brian Eutermoser*/

Brian Eutermoser
Registration No. 64,058

Attorney for Patent Owner
e-Vision Optics, LLC

CERTIFICATION OF WORD COUNT

The undersigned hereby certifies that the portions of the above-captioned **PATENT OWNER'S RESPONSE** specified in 37 C.F.R. § 42.24 have 11,797 words, in compliance with the 14,000-word limit set forth in 37 C.F.R. § 42.24. This word count was prepared using Microsoft Word.

Date: March 31, 2025

Respectfully submitted,

KING & SPALDING LLP

BY: /*Brian Eutermoser*/

Brian Eutermoser
Registration No. 64,058

Attorney for Patent Owner
e-Vision Optics, LLC

CERTIFICATE OF SERVICE

The undersigned hereby certifies that the foregoing **PATENT OWNER'S RESPONSE** and all supporting **EXHIBITS 2001-2004** were served by filing the documents through the Patent Trial and Appeal Case Tracking System (P-TACTS) on March 31, 2025, and were served via electronic mail, in their entireties on the following:

Ali S. Razai (Reg. No. 60,771)
ali.razai@morganlewis.com
Benjamin B. Anger (Reg. No. 62,207)
ben.anger@morganlewis.com
MLB-Luxottica-IPR-483@morganlewis.com
Morgan, Lewis & Bockius LLP
600 Anton Boulevard, Suite 1800
Costa Mesa, CA 92626-7653
Phone: (714) 830-0600
Fax: (714) 830-0700

Counsel for Petitioner
Luxottica of America Inc.

Alexander B. Stein (Reg. No. 71,397)
alexander.stein@morganlewis.com
Jacob L. Peterson (Reg. No. 65,096)
jacob.peterson@morganlewis.com
Morgan, Lewis & Bockius LLP
1301 Second Avenue, Suite 3000
Seattle, WA 98101
Phone: (206) 274- 6400
Fax: (206) 274-640

Counsel for Petitioner
Luxottica of America Inc.

Date: March 31, 2025

KING & SPALDING LLP

BY: */Brian Eutermoser/*

Brian Eutermoser
Registration No. 64,058

Attorney for Patent Owner
e-Vision Optics, LLC