UNITED STATES PATENT AND TRADEMARK OFFICE

BEFORE THE PATENT TRIAL AND APPEAL BOARD

LUXOTTICA OF AMERICA INC.,

Petitioners

v.

E-VISION OPTICS, LLC

Patent Owner

Case No. IPR2024-01070
Patent No. 8,801,174

DECLARATION OF PROFESSOR JAMES H. OLIVER, Ph.D.
IN SUPPORT OF PATENT OWNER'S RESPONSE

TABLE OF CONTENTS

I. QUALIFICATIONS 2

II. UNDERSTANDING OF RELEVANT LEGAL PRINCIPLES 8

III. STATE OF THE PRIOR ART 11

IV. The ’174 patent 12

A. Summary of the ’174 Patent 12

B. Claim Construction 22

C. Level of Ordinary Skill in the Art 24

V. OVERVIEW OF PRIOR ART 26

A. Overview of Brunton (Grounds 1-4) 26

B. Overview of Kokonaski-999 (Grounds 4, 8) 28

C. Overview of Hattori-913 (Ground 5) 30

D. Overview of Delorenzo (Grounds 6-7) 33

E. Overview of Kokonaski-579 (Ground 8) 35

F. Overview of Howell-596 (Ground 9) 35

G. Overview of Eichelberger (Ground 9) 37

H. Overview of Sikonowiz (Ground 9) 38

VI. None OF PETITIONER’S PROPOSED COMBINATIONS RENDERs OBVIOUS THE CHALLENGED CLAIMS 1-19 40

A. Petitioner Fails to Establish Claim 1 is Anticipated or Rendered Obvious Under Grounds 1-2 and 4-7 41

1. Brunton (Grounds 1-2) Does Not Anticipate or Render Obvious Independent Claim 1 42

2. Kokonaski-999 in View of Brunton (Ground 4) Does Not Render Claim 1 Obvious....52

3. Hattori-913 (Ground 5) Does Not Render Claim 1 Obvious....55

4. Delorenzo (Grounds 6-7)) Does Not Render Claim 1 Obvious....63

5. Grounds 1-7 Do Not Anticipate or Render Obvious Dependent Claims 2-14....67

6. Grounds 8-9 Do Not Render Claim 15 Obvious 4....68

7. Kokonaski-999 in View of Kokonaski-579 (Ground 8) Does Not Render Claim 15 Obvious....69

8. Howell-596 in View of Eichelberger (Ground 9) Does Not Render Claim 15 Obvious....70

9. Petitioner Fails to Establish that a POSITA Would Have Been Motivated to Combine Howell-596 and Eichelberger (Ground 9) to Render Claim 16 Obvious....74

10. Petitioner Fails to Establish that Dependent Claim 18 is Rendered Obvious Under Ground 9....75

VII. CONCLUSION....76

EXHIBIT LIST

Exhibit	Description
2015	Declaration of Professor James H. Oliver, Ph.D
2002	*Curriculum Vitae* of Professor James H. Oliver, Ph.D.
2017	*e-Vision Optics, LLC and Vision Smart Optics, Inc. v. Luxottica Group S.P.A. and Luxottica of America Inc.*, Case No. 8:23-cv02013 AB (SHK), Luxottica's (Petitioner's) Opening Claim-Construction Brief, Dkt. 76 (C.D. Cal., Aug. 30, 2024) ("Petitioner's Claim Construction Brief")
2018	Second Translation of Japanese Patent Application Publication No. S58-113913 ("Hattori-913 Second Translation")

I, Professor James H. Oliver, Ph.D., declare as follows:

1. I have been engaged by King & Spalding LLP on behalf of e-Vision Optics, LLC ("Patent Owner"), to provide this Declaration concerning the technical subject matter relevant to Petitioner Luxottica's petition for Inter Partes Review ("Petition") of U.S. Patent 8,801,174 ("the '174 patent").

2. I am over 18 years of age. I have personal knowledge of the facts stated in this Declaration and could testify competently to them if asked to do so.

3. I have reviewed and am familiar with the specification and the claims of the '174 patent. In general, I will cite to the specification of a United States patent using the following formats: (Exhibit No. Col.:Line Number(s)) or (Exhibit No. Paragraph Number(s)). For example, the citation (EX-1001 1:1–10) points to the '174 patent specification at column 1, lines 1–10. Also, for convenience, I use italics to denote limitations from the challenged claims.

4. All the opinions in this Declaration are based on the documents I reviewed and my knowledge and professional judgment. In forming the opinions expressed in this Declaration, I reviewed the Petition for *Inter Partes* Review of U.S. Patent No. 8,801,174 and supporting exhibits.

5. I have been asked to provide my technical opinions regarding how a person of ordinary skill in the art would have understood the claims of the '174 patent at the time of the alleged invention. I have also been asked to provide my technical

opinions on how concepts in the ’174 patent specification relate to claim limitations of the ’174 patent. In reaching the opinions provided herein, I have considered the ’174 patent, its prosecution history, and the references cited above and have drawn as appropriate on my own education, training, research, knowledge, and personal and professional experience.

6. I am being compensated at my standard rate of $500 per hour for my time, plus reasonable out-of-pocket expenses. I have received no additional compensation for my work in this litigation, and my compensation does not depend upon the contents of this report, any testimony that I may provide, or the ultimate outcome of this litigation.

I. QUALIFICATIONS

7. In formulating my opinions, I have relied on my knowledge, training, and experience in the relevant filed, which I will summarize briefly. A more detailed summary of my background, experience, and publications is set forth in my curriculum vitae (CV), which is submitted as Exhibit 2016.

8. I currently hold the rank of University Professor and serve as the Pithan Director of Innovation at Iowa State University. For more than forty years, I have studied, worked in, and taught mechanical engineering, computer graphics, software development, and human-computer interaction, as well as virtual and augmented reality.

9. I received a Bachelor of Science in Mechanical Engineering degree from Union College in Schenectady, New York in 1979. My earliest engineering experience exposed me to advanced analysis of dynamic mechanical systems. While working at Mechanical Technology Inc., I conducted computational analyses of operating rotor-bearing systems, including critical speed, unbalanced response, and stability in both torsional and lateral machine dynamics. This experience led to a graduate fellowship at Michigan State University in East Lansing, Michigan, where my Master's thesis focused on harmonizing computational modal analysis (i.e., vibrational characteristics) of mechanical systems with equivalent experimental results. In 1981, I received a Master of Science degree in Mechanical Engineering from Michigan State University. In 1986, I received a Ph.D. in Mechanical Engineering, also from Michigan State University.

10. I have taught at different universities as a professor in Mechanical Engineering, Electrical and Computer Engineering, and Aerospace Engineering. Starting in August 1988 until August 1991, I was an Assistant Professor in the Department of Mechanical and Aerospace Engineering at the State University of New York at Buffalo, New York. I have also held various professor positions at Iowa State University, including Assistant Professor in the Department of Mechanical Engineering starting in August 1991, before becoming an Associate Professor in April 1993. I held that position until July 2000, and eventually returned

to the same position in September of 2001, before being promoted to the rank of Professor in April 2004. In August 2012, I became a University Professor, an honorary title acknowledging lasting impact on the entire university. In addition to teaching as part of the Department of Mechanical Engineering at Iowa State University, I have received courtesy appointments to the Department of Aerospace Engineering since March 2005; the Department of Electrical and Computer Engineering since June 2005; and the Department of Industrial and Manufacturing Systems Engineering since May 2007—appointments which I still hold. From May 2010 to July 2011, I was a Visiting Professor at Image Institute in the Ecole Nationale Supérieur d'Arts et Métiers, ParisTech in Chalon-sur-Saône, France.

11. Over my career, I have taught numerous other university courses, including "Mechanical Systems Design;" "Virtual Environments, Virtual Worlds and Applications"; Computer Graphics and Geometric Modeling; "Computer-Aided Design Applications;" and "Computer-Integrated Manufacturing." For example, I co-developed the content for the introductory design course, ME 270 Introduction to Mechanical Engineering Design. Referred to as our "cornerstone" design course, ME 270 is intended to provide students with context for the in-depth analysis-intensive courses they encounter later in our curriculum. It provides a broad introduction to contemporary mechanical design practice, while incorporating technical modeling and analysis techniques drawn from the basic physics and

calculus courses that students have completed to that point in their overall curriculum. Specific course topics include market evaluation, customer requirements, ideation, conceptual design, mathematical modeling and analysis, business case development, detail design, prototype fabrication, prototype testing, resolving analysis predictions with test results, cost analysis, and final product proposal. At the senior undergraduate level, I teach ME 415 Mechanical Systems Design. This course is referred to as our "capstone" design course because it draws from all of the student's experience gained through the core curriculum to provide an integrative, culminating, and in-depth product design experience. Design challenges for this course are typically solicited from regional industry partners. Students often work in close collaboration with industry colleagues on design problems with actual market impact. Many of the projects focus on electro-mechanical systems.

12. In addition to teaching at Iowa State University, I have also been involved in the University's research and development efforts. I have served as an Associate Director from April 1993 to July 1997 at the Iowa Center for Emerging Manufacturing Technology (later renamed as the Virtual Reality Applications Center), where I assisted in building a world-renowned research center for applied virtual reality. In fall 2003 I was named director of the Virtual Reality Applications Center and fostered its continued growth until July 2019. Under my leadership the

Virtual Reality Applications Center's ongoing contract research has increased from $9M to $20M, and faculty involvement has broadened to encompass colleagues from all Iowa State University colleges. From 2005 to 2007, I led fundraising, technical specification, bid process, and vendor management for a $5M upgrade of our flagship device, the C6—now the world's highest resolution immersive VR facility—and in 2008 led an $800K upgrade of Lee Liu Auditorium in Howe Hall, making it the world's highest resolution stereoscopic immersive theater.

13. I have also had extensive experience in the software industry, including as Director, Senior Director, and Vice President of Product Development for various companies. From April 1987 to August 1988, I was a Software Research Engineer at International TechneGroup, Inc., where I conducted software research and development and provided engineering consulting. From 1997-2001, I took a leave from my university position to work in the software industry. I joined Engineering Animation Inc. to lead their core technology team, focused on CAD-independent, large model visualization to facilitate virtual product prototyping. In 1999, I conceptualized, planned, and led development of e-Vis, the first commercial software product to combine high-performance product visualization with secure Internet-based collaboration capabilities to empower distributed product development and supply chain integration. After several corporate acquisitions,

these technologies are now referred to as TeamCenter Visualization, part of the Siemens PLM Software tool suite, and are used by manufacturers around the world.

14. In 2007, I co-founded BodyViz, a high technology startup focused on low cost, easy-to-use medical visualization with sales in the medical, education, veterinary, and legal markets. BodyViz delivers access to real human anatomy by creating easy to use, interactive 3D MRI and CT scan experiences. BodyViz won the Prometheus Award for "Start up Company of the Year" from the Technology Association of Iowa in 2008, and also won first place in the John Pappajohn Iowa Business Plan Competition in 2009.

15. I have received financial support for my research programs from several federal sources, including the National Science Foundation, NASA, and the research branches of the Navy, Air Force, and Army. Industry sponsors of my research include John Deere, Rockwell Collins, and Boeing. I have received numerous professional honors and awards, including the Gustus L. Larson Memorial Award from the American Society of Mechanical Engineering, recognizing early career achievement, and the National Science Foundation's prestigious Young Investigator Award. I served six years as Associate Editor of the ASME Transactions, Journal of Computing and Information Science in Engineering. I am a Fellow of the American Society of Mechanical Engineering. I have been a member of the Institute of Electrical and Electronics Engineers since 1983, and the Association for

Computing Machinery since 2010. I was also elected Fellow of the American Society of Mechanical Engineers in 2006. I hold four US patents on innovations in mechanical design and manufacturing, as well as virtual reality.

II. UNDERSTANDING OF RELEVANT LEGAL PRINCIPLES

16. I am not a lawyer, and I will not provide any legal opinions. Although I am not a lawyer, I have been advised that technical experts apply certain legal standards when they form opinions about the meaning and validity of patent claims.

17. I understand the claims, not a patent's disclosure, define the scope of the patented inventions. I further understand a patent may include two types of claims, independent claims and dependent claims. An independent claim stands alone and includes only the limitations it recites. A dependent claim can depend from an independent claim. A dependent claim can also depend from a dependent claim.

18. I also understand certain claims are "comprising" claims. I am informed that this means that the claim encompasses all the elements listed, but that other additional, unnamed elements may also be present.

19. I understand that a patent claim is invalid if it is anticipated or obvious in view of the prior art, and that a claim can be unpatentable even if all of the requirements of the claim cannot be found in a single prior-art reference. I further understand that invalidity of a claim requires that the claim be anticipated or obvious

from the perspective of a person of ordinary skill in the art at the time the invention was made.

20. I have been informed that a patent claim is invalid if it would have been obvious to a person of ordinary skill in the art. In analyzing the obviousness of a claim, I understand the following factors may be taken into account: (1) the scope and content of the prior art; (2) the differences between the prior art and the claims; (3) the level of ordinary skill in the art; and (4) any so called "secondary considerations" of nonobviousness if they are present.

21. I have been informed that a claim can be obvious in light of a single prior art reference or multiple prior art references. I understand that to prove that prior art or a combination of prior art renders a patent obvious, it is necessary to:

1) Identify the particular references that, singly or in combination, make the patent obvious;
2) Specifically identify which elements of the patent claim appear in each of the asserted references; and
3) Explain why a person of ordinary skill in the art would have combined the references, and how they would have done so, to create the inventions claimed in the patent. I further understand that exemplary rationales that may support a conclusion of obviousness include:

- Combining prior art elements according to known methods to yield predictable results;
- Simple substitution of a known element for another to obtain predictable results;
- Use of known technique(s) to improve similar devices (methods or products) in the same way;
- Applying a known technique to a known device (method or product) ready for improvement to yield predictable results;
- Choosing from a finite number of identified, predictable solutions with a reasonable expectation of success, which I am informed is the "obvious to try" standard;
- Known work in one field of endeavor may prompt variations of the work for use in either the same field or a different field based on design incentives or other market forces if the variations are predicable to a person of ordinary skill in the art; and
- Some teaching, suggestion, or motivation in the prior art that would have led a person of ordinary skill in the art to modify the prior art reference or to combine the prior art reference teachings to arrive at the claimed invention.

22. I have been informed that, in considering obviousness, hindsight reasoning derived from the patent at issue may not be used.

III. STATE OF THE PRIOR ART

23. At the time of the ’174 patent, there was a growing “trend of utilizing electronics in eyewear” that was “accelerating and the applications being developed by others [were] expanding.” (EX-1001, ’174 patent, 1:21-23.) But as recognized by the ’174 patent, it was becoming “increasingly relevant to find ways to incorporate electronics into eyewear without harming the aesthetics and functionality of the eyewear,” and it was important to implement electronics in such a manner that did “not limit the fashion design of the eyeglass frame or limit the materials of eyeglass frame.” (*Id.*, 1:27-28.)

24. The ’174 patent implements an electronics module into eyewear using a novel technique to physically secure the module using conductors. In addition to securing the module, this design “reduce[s] the need to use multiple fasteners for the electronics module because, for instance, at least a portion (e.g. one side of) the electronics module may be held in place by the electrical conductor.” (EX-1001, ’174 patent, 10:18-21.) Where prior art teachings failed, the ’174 patent implements electronics into eyewear in an economical and low-footprint manner. Having reviewed the Petition, it is my opinion that none of the prior art identified by Petitioner discloses or renders obvious this technique.

25. The ’174 patent also implements design and manufacturing techniques for eyeglass frames and the aforementioned electronics that improved over prior inefficient teachings. By using a substrate as a “back bone,” “the electronic components may be more readily physically coupled together prior to being inserted into the more confining electronics module enclosure.” (EX-1001, ’174 patent, 21:42-46.) Furthermore, the entire assembly and components can be “disposed within the outer casing of an electronics module (or in some embodiments, directly into a cavity of a temple of electronic eyewear).” (*Id.*, 21:66-22:1.) Petitioner fails to identify a prior art that discloses or renders obvious these method techniques for manufacturing and design.

IV. THE ’174 PATENT

A. Summary of the ’174 Patent

26.The ’174 patent is entitled “Electronic frames comprising electrical conductors.” Generally speaking, the ’174 patent relates to eyewear with improved electronics incorporation while maintaining the aesthetics and functionality of the eyewear. In addition, the ’174 patent teaches manufacturing techniques for implementing electronics into modules and the eyewear itself.

27.The ’174 patent features an electronics module in the eyewear. This electronics module implements “a housing or container that may comprise one or more electronic components,” including, as an example, “a power source (such as a

battery), a sensing mechanism (such as a capacitance switch, which may activate or deactivate the electronics) and/or a controller (such as a microprocessor)." (EX-1001, '174 patent, 8:8-14.)

28. As an illustrative example I present Figure 2 of the '174 patent below. Figure 2 demonstrates an exemplary eyewear (101) of the '174 patent that includes a temple (102), a lens housing (103) and lens (104), and an electronic module (106). Annotations have been added highlighting these features of the exemplary eyewear. I further note that fastener (105), electrical conductors (107 and 108), conductive paths (109 and 110), and insulator material (111) are illustrated below as well.

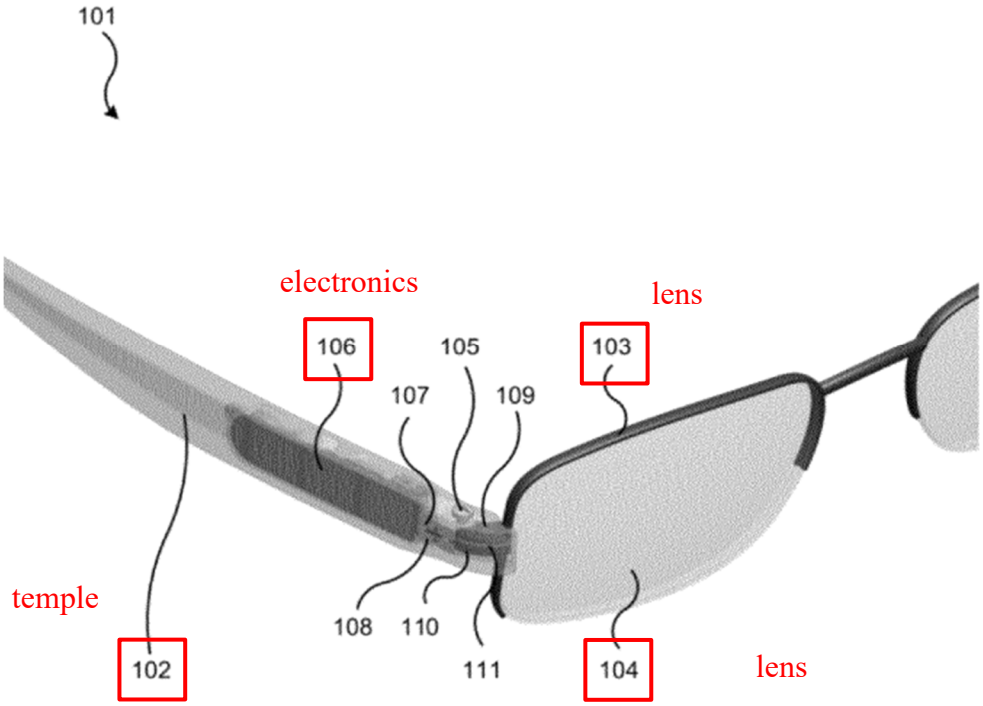

(EX-1001, '174 patent, Figure 2 (annotations added).)

29. Furthermore, the '174 patent implements a unique technique for physically securing the electronics module to the eyewear. The '174 patent

physically securing the electronics module to the eyewear by using the conductors instead of traditional mechanical instruments such as screws, fasteners, and cover plates. As described in the specification of the ’174 patent, a “first electrical conductor may constrain the electronics module when it is disposed within the temple such that, during normal use, the electrics module remains in place. However, the electronics module and/or the electrical conductor may be configured such that the module may also be removed from the temple without damaging the temple.” (EX-1001, ’174 patent, 13:44-49.) By designing the electrical conductors themselves to be the components that physically secure the electronics module, the ’174 patent “reduce[s] the need to use multiple fasteners for the electronics module because, for instance, at least a portion (e.g. one side of) the electronics module may be held in place by the electrical conductor.” (*Id.*, 10:18-21.)

30. As another illustrative example I present Figure 5 of the ’174 patent below. Figure 5 shows a closeup of an exemplary eyewear (101) and temple (102) of the ’174 patent and a configuration for fitting and securing an electronics module. As I have highlighted below with annotations, Figure 5 illustrates electrical conductors (107 and 108); a cavity (112) in the temple fitted for an electronics module; electrical conductor portions (113 and 114) with openings for fasteners to be inserted and apply a tightening force; and electrical conductor portions (115 and 116) that are disposed within an electronics module. Also shown is an electrical insulator (120):

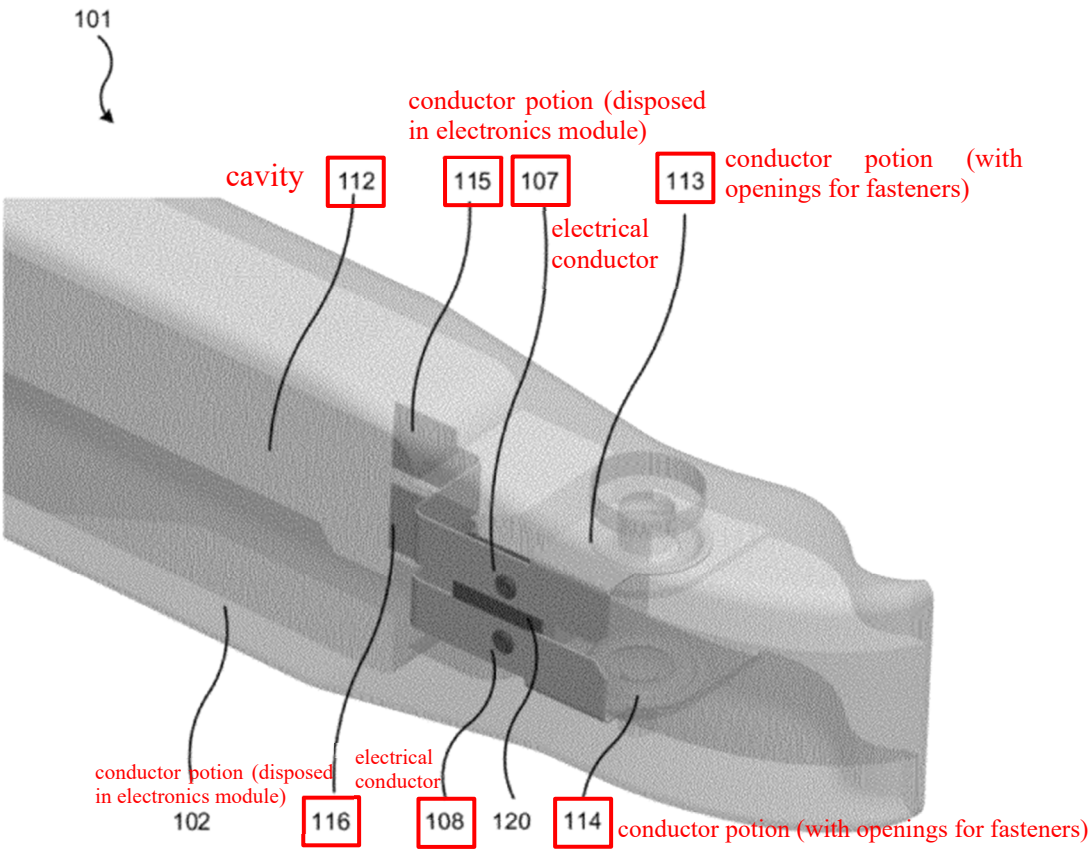

(EX-1001, ’174 patent, Figure 5 (annotations added.)

31. As another illustrative example I present Figure 14 of the ’174 patent below. Figure 14 of the ’174 patent shown below demonstrates an electronics module (106). I have also highlighted with annotations electrical conductors (107 and 108); electrical conductor portions (113 and 114) with openings for fasteners to be inserted and apply a tightening force; electronics module portion with an opening (117) for a fastener; and electronics module opening (118) with the electrical conductors inserted inside. Also shown is an electrical insulator (120):

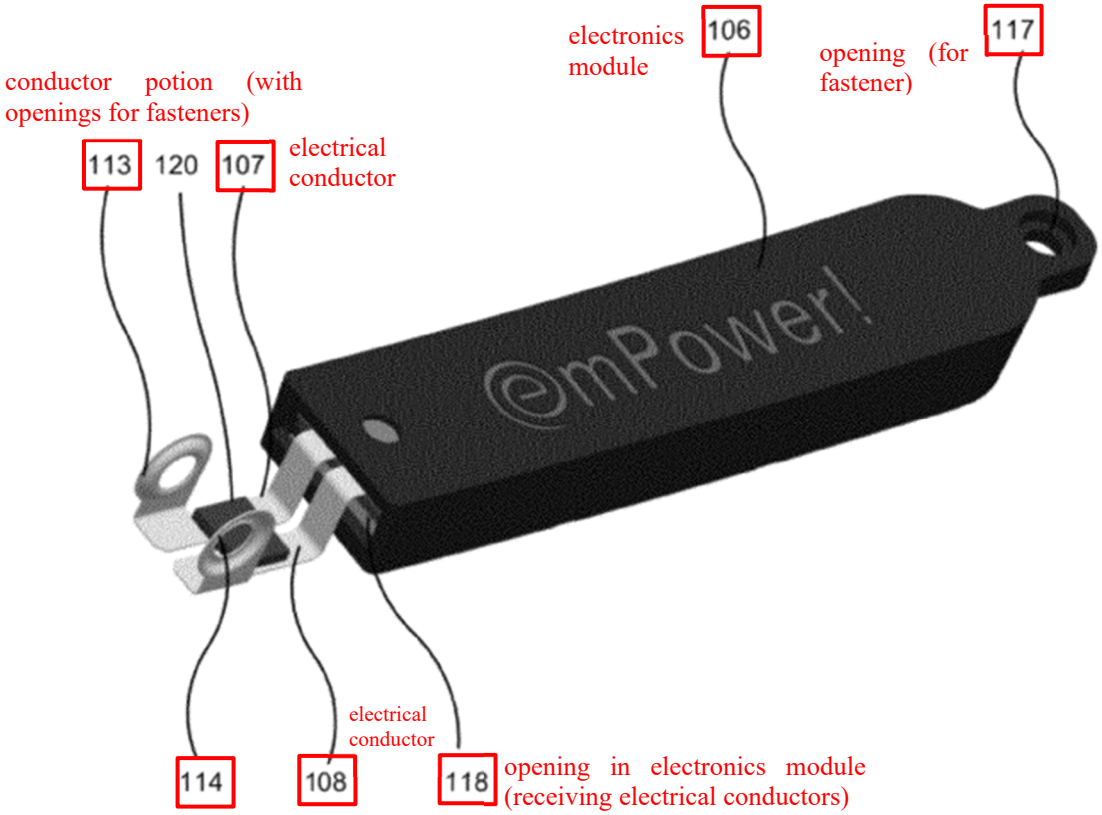

(EX-1001, '174 patent, Figure 14 (annotations added.)

32. The '174 patent teaches that its electronics module can be removeable. An eyewear wearer can remove the module by "apply[ing] a force to the electronics module that would not be typical during regular use (e.g. when worn by a user, or even dropped or slept on) such as tilting the eyewear, applying a force in a particular direction to the electronics module, and/or removing or loosening one or more fasteners (such as removing a screw that may be holding a part of the electronics module in place)." (EX-1001, '174 patent, 13:50-55.) The electronics module can be "reinserted into the temple and again constrained by the first electrical conducted such that the module is again coupled to the temple and held in place," for example,

by "an opening such that when the module is placed into the first temple, a portion of the first electrical conductors are inserted through the opening and apply a force to the module to hold it against, or disposed within, a cavity of the first temple." (*Id.*, 13:57-65.) The electronics module can also be "removably coupled to the first electrical conductor." (*Id.*, 13:65-67.)

33. As another illustrative example I present Figure 16 of the '174 patent below. As illustrated, Figure 16 shows another closeup of an exemplary eyewear (101) and temple (102) of the '174 patent. The eyewear is presented in a wireframe view demonstrating the configuration for fitting and securing an electronics module (106). Shown and annotated with red boxes are electronics module (106) and fastener (105) for securing electrical conductors (107 and 108). Also shown are a lens housing (103), conductive paths (109 and 110), and an insulator material (111):

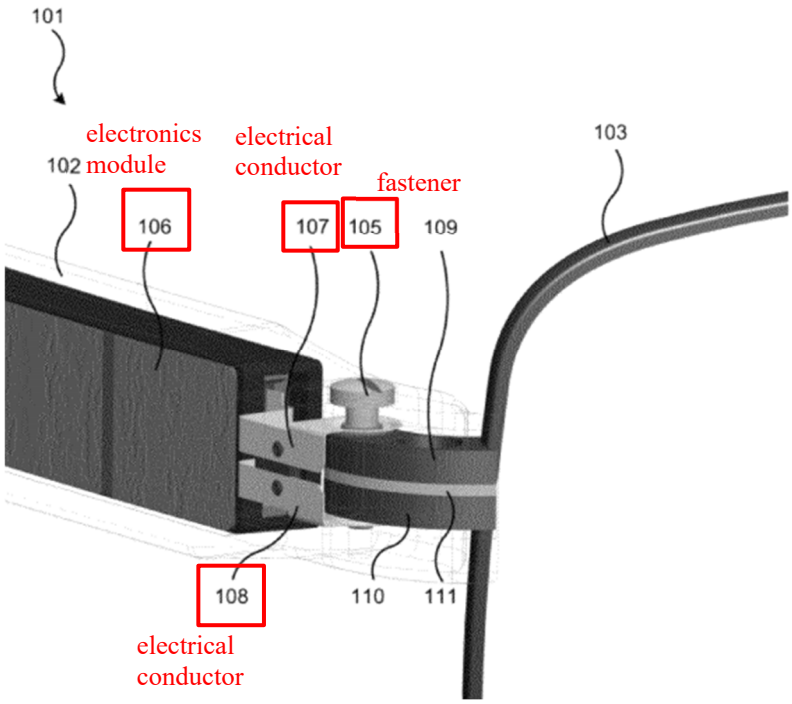

(EX-1001, ’174 patent, Figure 14 (annotations added).)

34. The electronics module system of the ’174 patent, as I have described above, introduced novel techniques for implementing electronics into eyewear in an economical and low-footprint manner. In my opinion, having reviewed the Petition and the prior art references relied upon for Grounds 1-9, not a single prior art identified by Petitioner discloses or teaches the electronics module system of the ’174 patent. In particular, none of the references identified by Petitioner disclose or teach the ’174 patent’s technique for physically securing the electronics module to the temple using the conductors. For example, as shown in Figure 14 above, none of the references identified by Petitioner teach or suggest implementing a fastening through the conductors themselves to physically fix an electronics module or similar electronic device to the temple using the conductors.

35. In addition, the ’174 patent also teaches the efficient design and manufacturing of the eyeglass frames and components.” (EX-1001, ’174 patent, 1:33-35.) The ’174 patent “discovered a method of manufacturing” that enabled “more efficient and timely production of” parts and components such as the “electronics module, particularly those that may comprise a sensor such as a captive touch switch. In particular, the inventors have found that by utilizing a substrate (such as a surface of a touch sensor; preferably a capacitive touch switch) as a ‘back bone’ (e.g. a platform) on which other electronic components may be disposed on, the electronic components may be more readily physically coupled together prior to being inserted into the more confining electronics module enclosure.” (*Id.*, 21:36-46.)

36. As another illustrative example I present Figure 19 of the ’174 patent below. Figure 19 shows an exemplary molded capacitive touch switch (201) with electronic components within an electronics module. Below I have highlighted a capacitive touch switch (201), a flexible circuit (202), a printed circuit board (or “PCB”) (203), a power source (204), a partial enclosure (205) (e.g., outer casing of an electronics module), electrical conductors (206) (e.g. pogo pins), and electrical components (207) coupled to the printed circuit board:

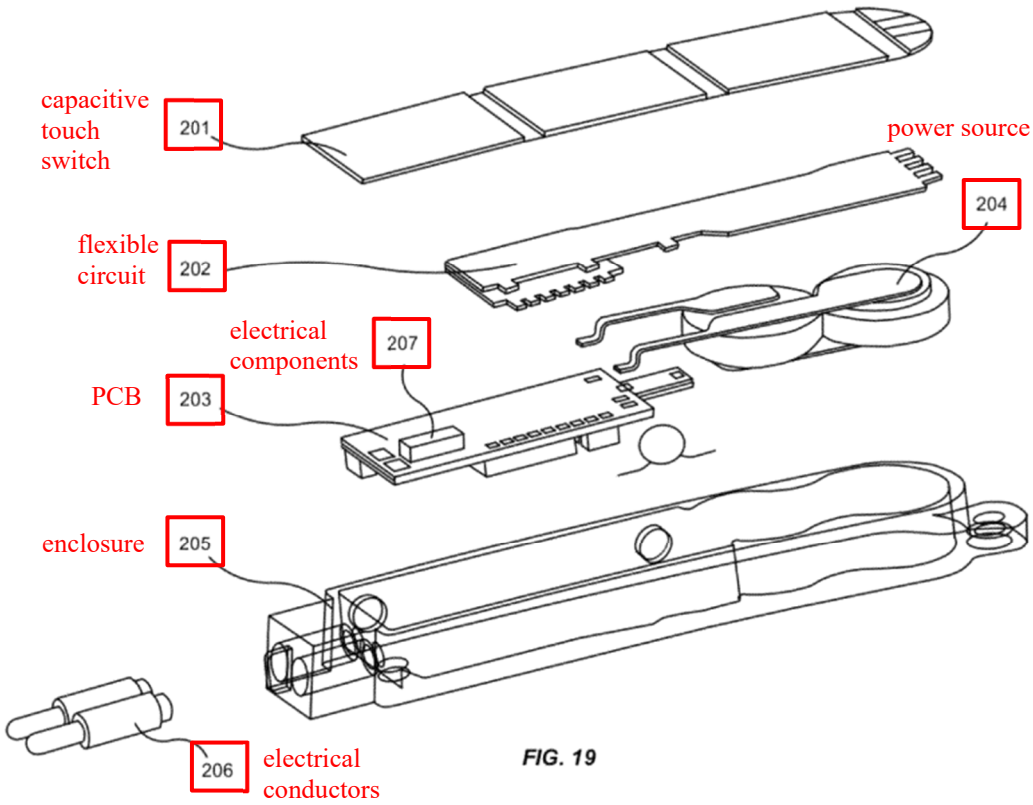

EX-1001, ’174 patent, Figure 19 (annotations added).

37. The ’174 patent explains that the electronic components can be “disposed or coupled to a capacitive touch switch (e.g. through any suitable technique, including reflow soldering),” with the “electrical connections between each of the electrical components may then be established (e.g. by soldering).” (EX-1001, ’174 patent, 21:60-63.) The entire assembly and components can “then be disposed within the outer casing of an electronics module (or in some embodiments, directly into a cavity of a temple of electronic eyewear).” (*Id.*, 21:66-22:1.)

38. As another illustrative example I present Figure 30 of the ’174 patent below. Figure 30, as shown, demonstrates a flow chart with exemplary steps for

implementing the ’174 patent’s manufacturing methods. For example, step 302 instructs to dispose an electronic component on the surface of a capacitive touch switch, and later at coupling the capacitive touch switch to an enclosure (step 307) and the disposing the enclosure into an eyewear temple (step 308) and forming an electrical connection with the components (step 309). See Figure 30 below:

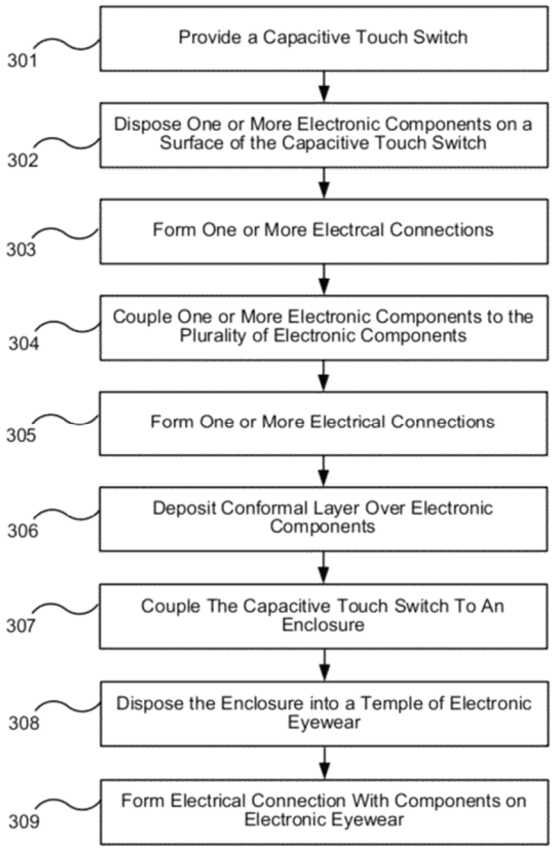

(EX-1001, ’174 patent, Figure 30.)

39. In my opinion, a POSITA would have understood the above-discussed manufacturing methods of the ’174 patent improved over prior techniques that did not address how to effectively put together eyewear with electronic modules and similar components. Petitioner fails to identify a prior art that discloses or renders

obvious these method techniques for manufacturing and design. For example, as shown in Figure 30 above, a POSITA would have understood that the ’174 patent taught steps for manufacturing devices such as electronic eyewear or the related frame that included placing electronic components on a capacitive touch switch and coupling the capacitive touch switch to an enclosure such as the enclosure for an electronics module. By performing these manufacturing steps in such a manner and in the order taught, the electronic components that are placed or disposed on the capacitive touch switch described above are also enclosed or substantially enclosed by the electronics module enclosure.

B. Claim Construction

40. Petitioner does not construe any claim terms in its Petition and “accorded all claim terms their plain and ordinary meaning.” Petition, 11. I have been informed by counsel, however, that Petitioner proffered the below constructions in the related district court litigation (*see* EX-2017, Petitioner’s Claim Construction Brief):

Claim(s)	Claim Term	Petitioner’s Construction
1	“electronics module”	“a housing or container with one or more electronic components disposed therein”
1	“conductive path”	“a continuous path for which electrons (i.e. current) may flow from one point to another”

Claim(s)	Claim Term	Petitioner's Construction
1	***"couple the electronics module to the first temple to constrain the electronics module"***	***"physically secure or provide a restraining force to the electronics module to retain the module in a fixed position within the temple"***
15	"coupling the capacitive touch switch to a partial enclosure to constrain the capacitive touch switch"	"physically securing or providing a restraining force to the capacitive touch switch to retain the capacitive touch switch in a fixed position relative to an enclosure that substantially surrounds the electronic components that are disposed on a surface of the capacitive touch switch"

41. I understand that Petitioner has not proffered the same constructions in this Petition as it did in the district court litigation. (*See* EX-2017, Petitioner's Claim Construction Brief.) For my analysis, I will address these constructions where relevant for the limitations I am assessing with the understanding that Petitioner has not proffered the same constructions yet here and the Board has not yet accepted the same.

C. Level of Ordinary Skill in the Art

42. I understand that certain issues relating to the validity of the ’174 patent must be judged from the perspective of a person of ordinary skill in the relevant art, as I discuss below. I have been asked to define the level of a “person having ordinary skill in the art” or “POSITA” that someone would have had at the time the alleged invention as claimed was made. In deciding the level of ordinary skill, I have considered the following factors, which I have been informed are relevant in determining the level of ordinary skill in the art:

- The levels of education and experience of persons working in the field;
- The types of problems encountered in the art;
- The prior art solutions to these problems;
- The rapidity with which innovations are made; and
- The sophistication of the technology.

43. A POSITA at the time of the invention of the ’174 patent would have had a bachelor’s degree in an accredited program electrical engineering, mechanical engineering, computer engineering, or a similar discipline, and 2 years of practical work or research experience in the general fields of electrical and mechanical engineering and embedded electronic devices. More advanced degrees or training in a related discipline or both can compensate for shorter work experience.

44. I understand that Petitioner has defined the level of ordinary skill in the art as:

> Under *In re GPAC Inc.*, 57 F.3d 1573, 1579 (Fed. Cir. 1995), a hypothetical person of ordinary skill in the art ("POSITA") would have had at least a bachelor's degree in mechanical or manufacturing engineering; mechatronics; electrical engineering plus coursework in mechanical engineering, manufacturing engineering, or mechatronics; or a similar technical degree. Ex.1002, ¶¶28-31. A POSITA would have also had at least 2 years of experience designing consumer electronics, such as eyewear with electronics. *Id.* Work experience could substitute. for formal education and additional formal education could substitute for work experience. *Id*.

(Petition, 10.)

45. I understand that the Board has applied the above definition in the Institution Decision. Paper 13, 12. My opinions as expressed in this Declaration would be the same when viewed under either party's definition of the level of ordinary skill in the art. The minor variations between them are immaterial.

46. Based on either standard, I was at least a person of ordinary skill in the art at the time of the invention of the '174 patent.

V. OVERVIEW OF PRIOR ART

47. Below I present a table below of Grounds 1-9 raised by Petitioner.

Ground 1	Section 102(a)	Anticipated by Brunton	Claims 1, 2, 4, 9, 12
Ground 2	Section 103(a)	Obvious over Brunton	Claims 1-4, 9, 12
Ground 3	Section 103(a)	Obvious over Brunton in view of Carling	Claims 7, 8, 13
Ground 4	Section 103(a)	Obvious over Kokonaski-999 in view of Brunton	Claims 1, 2, 4-6, 9, 12, 14
Ground 5	Section 103(a)	Obvious over Hattori-913	Claims 1, 2, 5, 6, 12, 13
Ground 6	Section 102(a)	Anticipated by Delorenzo	Claims 1, 2, 4, 9, 12, 13
Ground 7	Section 103(a)	Obvious over Delorenzo	Claims 1-4, 9-13
Ground 8	Section 103(a)	Obvious over Kokonaski-999 in view of Kokonaski-579	Claims 15-19
Ground 9	Section 103(a)	Obvious over Howell-596 in view of Eichelberger and Sikonowiz	Claims 15, 16, 18

A. Overview of Brunton (Grounds 1-4)

48. Petitioner relies on Brunton for **Grounds 1** (§102 anticipation; claims 1, 2, 4, 9, 12), **2** (§103 obviousness; claims 1-4, 9, 12), **3** (in view of Carling; claims 7, 8, 13), and **4** (in view of Kokonaski-999; claims 1, 2, 4-6, 9, 12, 14). Brunton is a patent entitled "Spectacle hearing aid mounting." Brunton generally describes mounting a hearing aid within the temples of spectacles or eyewear and "obviating the necessity of separate means of support for the microphone and hearing aid elements." (EX-1003, Brunton, 1:47-49.)

49. As an illustrative example I present Figure 1 of Brunton below. Brunton Figure 1 illustrates glasses with a receiver, battery, microphone, and volume control. Hearing aid unit 17 is shown on the left temple below. I have added a red box annotation to highlight hearing aid unit 17. Brunton's hearing aid uses "contact pins and the sockets provided with a corresponding number of tubular contacts that are positioned to receive the pins and in which the pins are frictionally retained." (EX-1003, Brunton, 3:61-65.) See Figure 1 below:

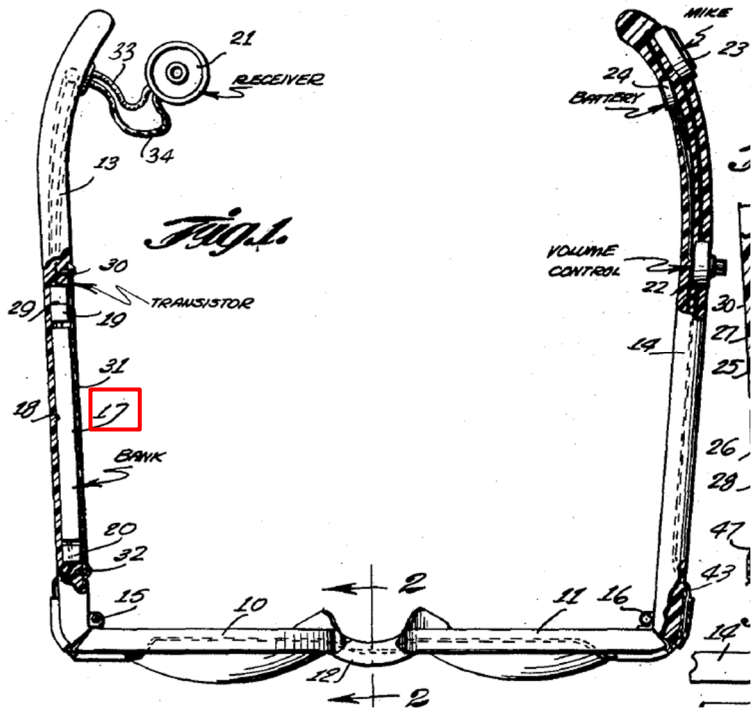

(EX-1003, Brunton, Figure 1 (annotations added).)

50. Brunton teaches that its hearing aids are physically held in place using a cover plate. As stated by Brunton, "the temple is provided with a cover plate 31 that is secured in position over the unit 17 and the transistor 29 with screws 32." As I will discuss in more detail below, in my opinion, a POSITA would have understood

from this cover plate that Bruton's contact pins (what Petitioner and Dr. Feland contend is the *conductor*) do not *constrain* the *electronics module* as required by claim 1. (*See* EX-1001, '174 patent, claim 1[i] ("*wherein the first and second electrical conductors are configured to couple the electronics module to the first temple to constrain the electronics module*").)

B. Overview of Kokonaski-999 (Grounds 4, 8)

51. Petitioner relies on Kokonaski-999 for **Grounds 4** (in view of Brunton; claims 1, 2, 4-6, 9, 12, 14) and **8** (in view of Kokonaski-579; claims 15-19). Kokonaski-999 is a PCT publication entitled "Electro-active spectacles and associated electronics." Kokonaski-999 is generally about electronics for controlling and synchronizing the operation of electro-active lenses.

52. As an illustrative example, I present Figure 2 of Kokonaski-999 below. As shown, Figure 2 illustrates a frame 102, an electronic module 202, and an electro-active lens 104:

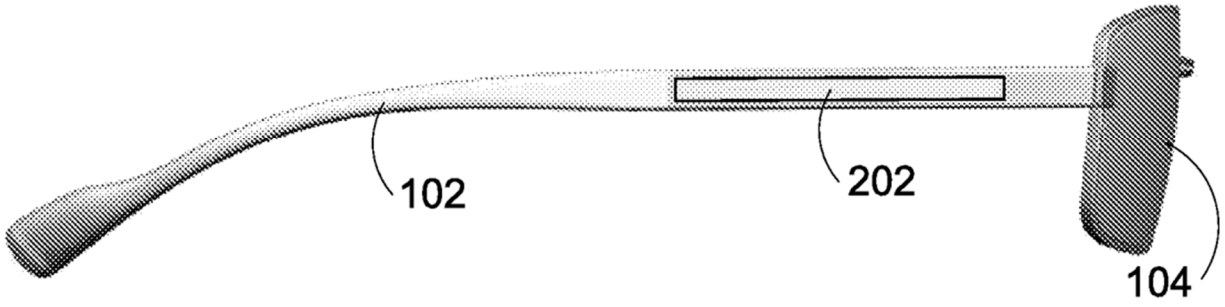

(EX-1004, Kokonaski-999, Figure 2.)

53. Kokonaski-999 further describes an "electronic module" that includes a housing and electronic contact pins. However, there are key differences between electronic module in Kokonaski-999 and the *electronics module* in the '174 patent. For example, Kokonaski-999 does not teach or disclose its electronic module being *constrained* using conductors as the '174 patent claims. *See* EX-1001, '174 patent, cl. 1[i] ("*wherein the first and second electrical conductors are configured to couple the electronics module to the first temple to constrain the electronics module*").

54. As another illustrative example, Kokonaski-999 Figure 5 is shown below. Figure 5 demonstrates the electronics module 202 within a housing (502) and with first (504) and second contacts (506):

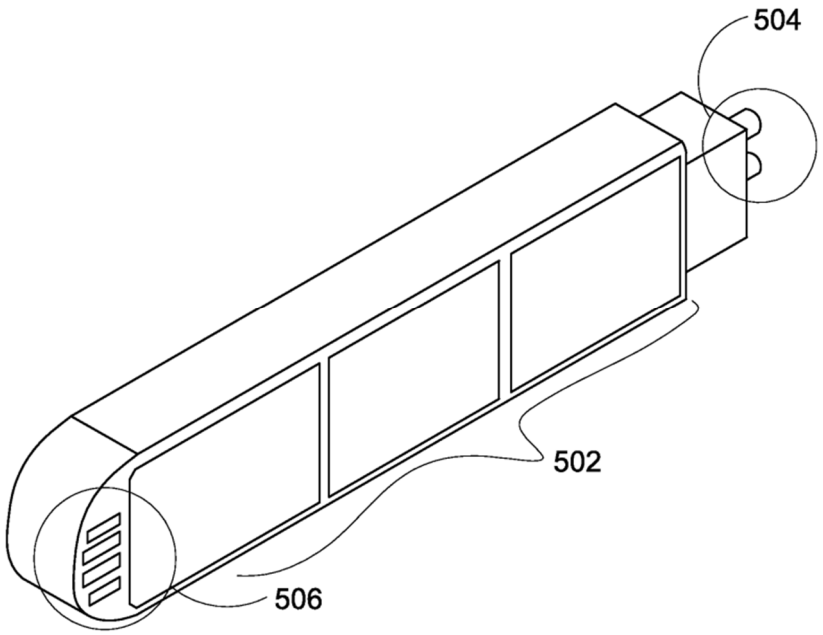

(EX-1004, Kokonaski-999, Figure 5.)

55. Petitioner also relies on Kokonaski-999 for **Ground 8** (along with Kokonaski-579) for claims 15-19. Claims 15-19 are method claims related to manufacturing. However, the word "manufacture" only appears in a single isolated sentence in Kokonaski-999. (*See* EX-1004, Kokonaski-999, [0079] ("Electrical connectively between the right-side portion 1002 and the left-hand portion 1004 of a rimless frame can be accomplished by using conductive elements incorporated into the manufacture of the electro-active lenses 104 and 106.").)

C. Overview of Hattori-913 (Ground 5)

56. Petitioner relies on Hattori-913 for **Ground 5** (§103 obviousness; claims , 2, 5, 6, 12, 13). Delorenzo is a patent entitled "Eyeglass frame with hearing aid" and is directed to eyeglasses with hearing aids. Hattori-913 is an unexamined Japanese patent application entitled "Eyeglasses with display device." I am aware that Petitioner first provided as translation as EX-1006. (*See* EX-1006, Hattori-913.) I am also aware that second translation for Hattori-913 has been obtained to clarify a passage Petitioner relies upon. (*See* EX-2018, Hattori-913 Second Translation.) I am aware that the second translation for Hattori-913 (EX-2018) was produced by two translators; the first translation for Hattori-913 (EX-2016) appears to have been produced by only one. I have reviewed both translations of Hattori-913 and my opinions consider both.

57. Hattori-913, entitled "Eyeglass frame with hearing aid," generally relates to glasses with electronic elements and a liquid crystal display pasted on the lenses. Hattori-913 uses standard electronic components, such as drive circuits and integrated circuits. As an illustrative example, I present Figure 2 of Hattori-913 below. As shown, Figure 2 illustrates lens 1, display 2, a frame 3, drive circuit 4, transparent lead 9, lead rubber 10, and wire bundle 11:

Figure 2

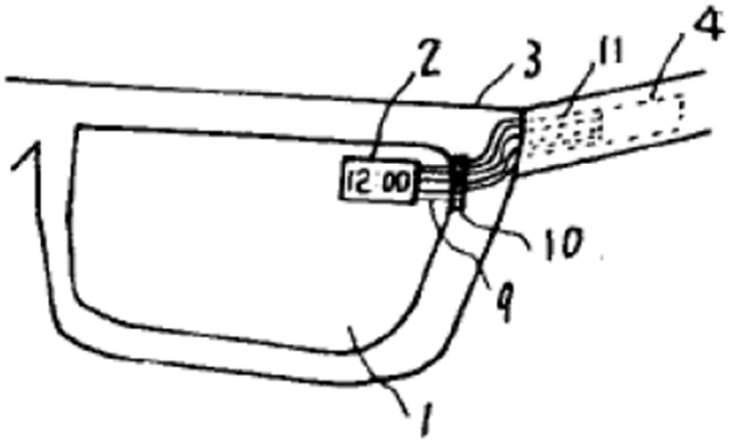

(EX-1006, Hattori-913, Figure 2.)

58. One key distinguishment between the '174 patent and Hattori-913 is that Hattori-913 does not describe or suggest physically constraining electronic components, such as integrated circuits, in a fixed position using electrical conductors. Instead, Hattori-913 uses a ZEBRA connector, a common elastomeric interconnection device composed of conductive and non-conductive layers. ZEBRA

connectors are commonly used as a connection bridge between devices such as, for example, liquid crystal display (LCD) modules (e.g., Indium Tin Oxide (ITO) coated glass) and a printed circuit board (PCB). Hattori-913 is silent as to whether or how any physical restraint of its integrated circuit 18 is accomplished.

59. As I previously mentioned, a second translation of Hattori-913 has been obtained. (*See* EX-2018, Hattori-913 Second Translation.) Petitioner relies upon a particular translated passage of Hattori-913 to contend that Hattori-913's ZEBRA connector 24 is physically part of the temple itself and therefore *couples the electronics module* [(Hattori-913's integrated circuit 18)] *to the first temple to constrain the electronics module* as required for claim limitation 1[i]. (*See* Petition, 8 ("The integrated circuit 18 is 'connected to zebra connector 24 embedded in the temple,' which also constrains the integrated circuit 18 in the temple 3." (quoting EX-1006, Hattori-913, 68)); 1006, Hattori-913, 68 ("CMOS circuit 19 and semiconductor integrated circuit 18 incorporating individual electronic components 20 such as capacitors and transistors are embedded in recess 21 processed in temple 1, and its +1 power terminal 22 is connected to battery 4, while its output terminal group 23 is also connected to zebra connector 24 embedded in the temple.").

60. However, as I will discuss further below in Section V.D for **Ground 5**, *infra*, the second translation demonstrates that there is no such physical connection between Hattori-913's ZEBRA connector and temple. (*See* EX-2018, Hattori-913

Second Translation, 68 ("A semiconductor integrated circuit 18 incorporating a subcomponent 20 is incorporated into a recess 21 machined in the temple 1, with its positive and negative power terminals 22 connected to a battery 4, while its output terminal group 23 is connected to a zebra-type connector 24 also incorporated in the temple. It is secured to the semiconductor integrated circuit 18 by a barb 26 thereon.").) Instead, the ZEBRA connector is placed inside. In my opinion, a POSITA would have likewise understood that Hattori-913's ZEBRA connector is placed in the temple and there is no such physical connection, security, or restraint such as, e.g., a fastener or cover plate, that physically connects or locks the ZEBRA connector to the temple itself.

D. Overview of Delorenzo (Grounds 6-7)

61. Petitioner relies on Delorenzo for **Grounds 6** (§102 anticipation; claims 1, 2, 4, 9, 12, 13) and **7** (§103 obviousness; claims 1-4, 9-13). Delorenzo is a patent entitled "Eyeglass frame with hearing aid" and is directed to eyeglasses with hearing aids.

62. As an illustrative example, I present Figure 1 of Delorenzo below. As shown below, Figure 1 demonstrates eyeglasses with a conventional amplifier 17 that is within temple 15 and connected to battery 18 and hearing tube 19 and earpiece 20. I have added a red box highlighting these components below:

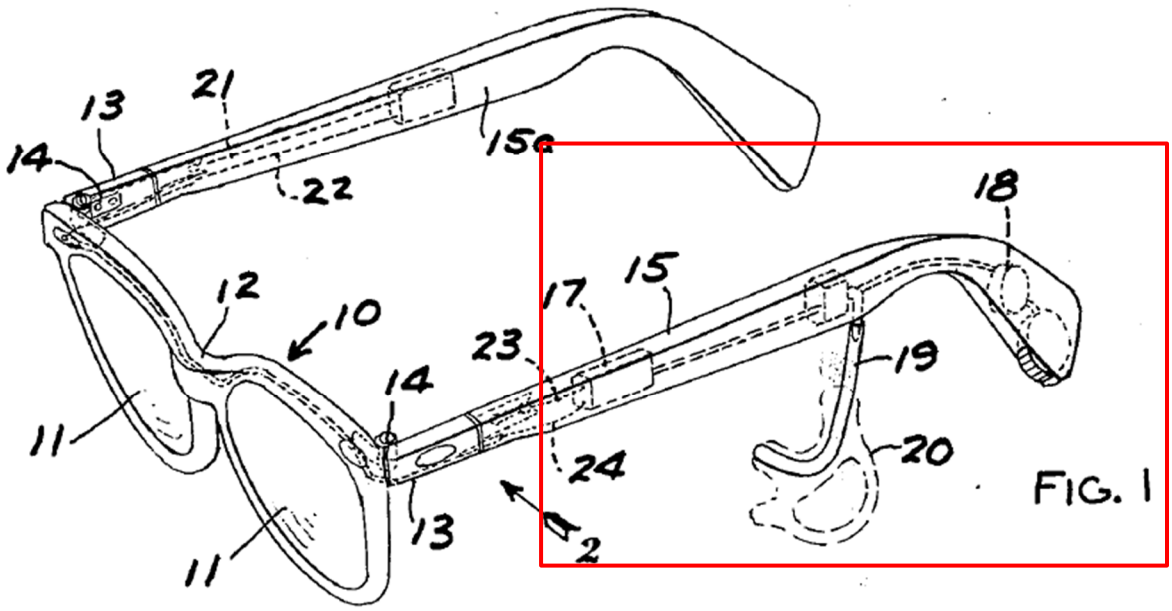

(EX-1007, Delorenzo, Figure 1 (annotations added).)

63. As stated above, Petitioner relies on Delorenzo for **Grounds 6 and 7** to cover claims 1-4, 9-13 under both anticipation and obviousness theories. However, the ’174 patent is distinguishable from Delorenzo. Delorenzo is focused on implementing conventional electronic components within an eyeglass frame. Petitioner and Dr. Feland fail to point out what exactly Delorenzo’s electronics module is. Petitioner points to Delorenzo’s temple and the general components within. But Petitioner does not identify a single individual component as the electronics module. In addition, the ’174 patent can be further distinguished from Delorenzo because Delorenzo does not physically restrain its electronic components in a fixed position using electrical conductors.

E. Overview of Kokonaski-579 (Ground 8)

64. Kokonaski-579 is a provisional application to Kokonaski-999. Petitioner relies on Kokonaski-579 only for method claims 15-19 under **Ground 8** in combination with Kokonaski-999. Like Kokonaski-999, Kokonaski-579 does not describe methods of manufacturing. The word "method" only appears in a single sentence in the first paragraph: "The present invention also provides for a low-cost, more reliable method for lens synchronization." (EX-1012, Kokonaski-579, 9.) The word "manufacture" does not appear at all.

F. Overview of Howell-596 (Ground 9)

65. Petitioner relies on Howell-596 for **Ground 9** in view of Eichelberger and Sikonowiz (claims 15, 16, 18). Howell-596 is a patent publication directed to electronic circuits used for monitoring radiation such as UV rays. (*See, e.g.,* EX-1015, Howell-596, ¶¶[0003]-[0005].) In view of the "need for improved approaches to measure and inform persons of UV radiation levels," Howell-596 discloses integrated UV detection systems that can be mounted on various vehicles (also referred to as end products). (*Id.*)

66. In one implementation for Howell-596, the circuit "is provided within eyewear so that the user of the eyewear is able to easily monitor their exposure to radiation." (EX-1015, Howell-596, Abstract.) As an example, I have illustrated Howell-596 Figure 1 below. Howell-596's Figure 1 illustrates eyewear with circuit

board 112, solar cell 114, UV detector 116, opening 118 (for solar cell 114), opening 120 (for UV detector 116) circuitry 122, and display device 124. I have added annotations highlighting the circuit board, display device, and UV detector:

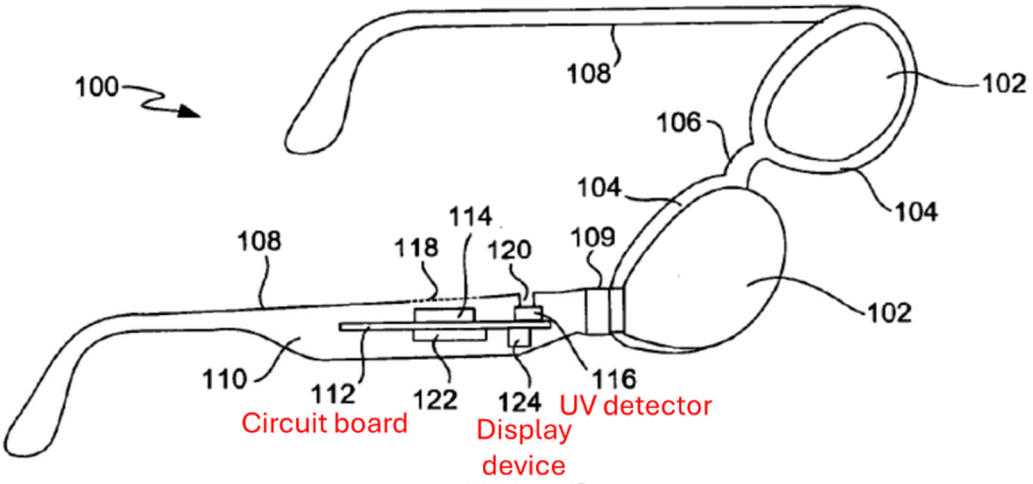

FIG. 1

(EX-1015, Howell-596, Figure 1 (annotations added).)

67. It should be further noted that eyewear is not the only device onto which Howell-596's UV detection system is mounted. To exemplify, I illustrate Howell-596's Figures 23A-23G. As shown, Howell-596 discloses numerous other options, such as a hat (23A), watch (23B), shirt (23C), shoe (23D), keychain (23E), bracelet or necklace (23F), and bottle or tube (23G):

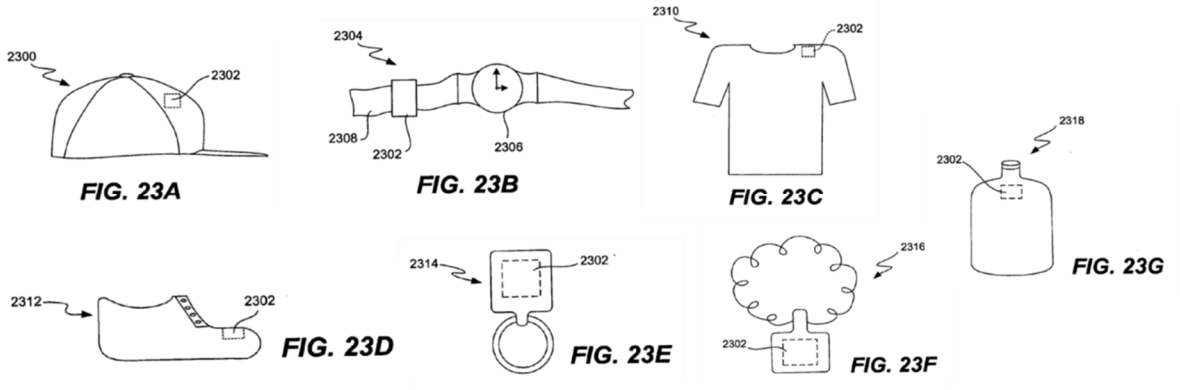

(EX-1015, Howell-596, Figures 23A-23F; *see also id.*, ¶[0232].)

68. I further note that unlike the ’174 patent, Howell-596 does not disclose or suggest any methods for making its electronic circuit, eyewear, or UV module as steps or instructions for manufacturing. Furthermore, Howell-596 does not describe using a capacitive touch switch in eyewear. Instead, Howell-596 uses a “push-button switch” that can “serve as a reset switch, an on/off switch, or an on (and reset) switch.” (EX-1015, Howell-596, ¶[0193].)

G. Overview of Eichelberger (Ground 9)

69. Petitioner relies on Eichelberger (in view of Howell-596 and Sikonowiz) for **Ground 9** (claims 15, 16, 18). Eichelberger is a patent directed only to a capacitive touch entry apparatus with a high degree of personal safety. *See* Ex. 1010, Eichelberger, Title; 1:6-9. Eichelberger does not disclose or suggest any connection to eyewear.

70. As an illustrative example, I present Figures 1A and 1B of Eichelberger below. As shown, Figures 1A and 1B illustrate a capacitive touch entry panel

comprising a substrate or panel of a transparent insulative material, with a surface that is contactable by a body part (e.g., finger), and at least one capacitive touch sensor on an insulative material layer 16:

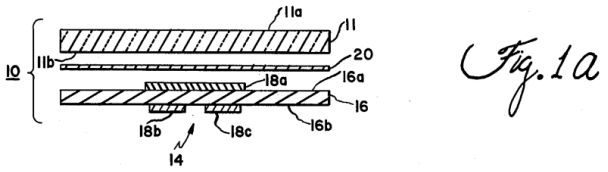

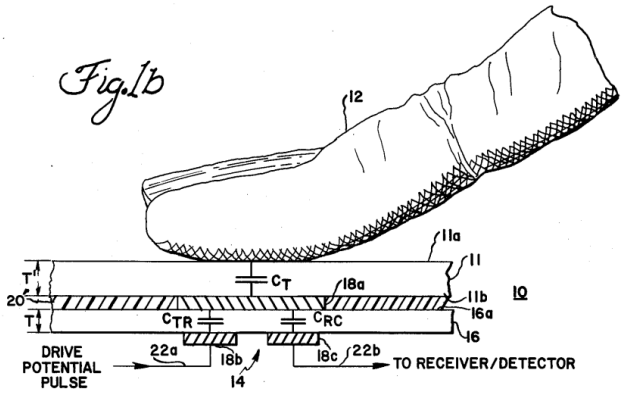

(EX-1010, Eichelberger, Figures 1A and 1B.)

H. Overview of Sikonowiz (Ground 9)

71. Petitioner relies on Sikonowiz for **Ground 9** (in view of Howell-596 and Eichelberger; claims 15, 16, 18). Sikonowiz is a textbook entitled "Designing and Creating Printed Circuits." Petitioner includes only chapter nine, which is titled "Final Assembly." (EX-1016, Sikonowiz, 122.) Dr. Feland opines that Sikonowiz "focuses on designing and manufacturing PCBs." (EX-1002, Feland Decl., ¶39.) The provided chapter includes a discussion regarding conformal coatings. However, nothing in the chapter is about eyewear or suggests the same. (*See* EX-1016, Sikonowiz; *see id.*, 122 ("Manual Insertion"), 123 ("Automated Insertion"), 128

("Soldering"), 128 ("Flux Characteristics"), 130 ("Flux Application"), 131 ("Soldering Equipment"), 133 ("Solder Masks"), 134 ("Clean-Up"), 135 ("Board Testing"), 135 ("Conformal Coating").)

VI. NONE OF PETITIONER'S PROPOSED COMBINATIONS RENDERS OBVIOUS THE CHALLENGED CLAIMS 1-19

72. Petitioner and its expert, Dr. Feland, contend that claims 1-19 of the '174 patent are invalid because they are anticipated or obvious over various prior art references and combinations as set forth below under **Grounds 1-9**. I disagree and summarize my opinions in the table below:

Ground	Reference(s)	Claims	Deficiency
1	Brunton (102)	1, 2, 4, 9, 12	Fails to show contact pins *constrain* an *electronics module* [cl. 1]; fails to show dependent claims based on this deficiency
2	Brunton (103)	1-4, 9, 12	Fails to show contact pins constrain an electronics module [cl. 1]; fails to show dependent claims based on this deficiency
3	Brunton, Carling	7, 8, 13	See above; does not show Carling makes up for the deficiencies of Brunton
4	Kokonaski-999, Brunton	1, 2, 4-6, 9, 12, 14	See above; to show contact pins *module* an *electronics module* [cl. 1]; fails to show dependent claims based on this deficiency
5	Hattori-913	1, 2, 5, 6, 12, 13	Fails to show ZEBRA connector *constrains* an *electronics module* [cl. 1]; fails to show dependent claims based on this deficiency
6	Delorenzo (102)	1, 2, 4, 9, 12, 13	Fails to show *electronics module* or how same is *constrained* [cl. 1]; fails to show dependent claims based on this deficiency
7	Delorenzo (103)	1-4, 9-13	Fails to show electronics module or how same is constrained [cl. 1]; fails to show dependent claims based on this deficiency

8	Kokonaski-999, Kokonaski-579	15-19	Fails to show *method* [cl. 15]; fails to show dependent claims based on this deficiency
9	Howell-596, Eichelberger, Sikonowiz	15, 16, 18	Fails to show *method* [cl. 15]; fails to show dependent claims based on this deficiency

73. I disagree with the arguments in the Petition and the opinions set forth by Dr. Feland for at least the reasons that I discuss in further detail below, *infra*. In particular, it is my opinion that claims 1 and 15 are patentable over the grounds Petitioner has relied on. In addition, because claims 2-9 and 12-14 depend from claim 1 and claims 16-19 depend from claim 15, they are patentable as well.

A. Petitioner Fails to Establish Claim 1 is Anticipated or Rendered Obvious Under Grounds 1-2 and 4-7

74. Claim 1 is the first independent claim of the ’174 patent from which claims 2-14 depend from. I present claim 1 as 1[pre] through 1[i] as they are presented in the Petition below:

1[pre] A first device, comprising:
1[a] a lens housing adapted to support a first lens and a second lens;
1[b] a first temple movably coupled to the lens housing;
1[c] a second temple movably coupled to the lens housing;
1[d] an electronics module disposed at least partially within the first temple;
1[e] a first electrical conductor coupled to the first temple,
1[f] wherein a first conductive path is provided from the first temple to the lens housing at least in part by the first electrical conductor; and
1[g] a second electrical conductor coupled to the first temple,
1[h] wherein a second conductive path is provided from the first temple to the lens housing at least in part by the second electrical conductor;

1[i] wherein the first and second electrical conductors are configured to couple the electronics module to the first temple to constrain the electronics module.

75. Petitioner relies on six grounds in challenging claim 1, including **Grounds 1** (Brunton § 102), **2** (Brunton § 103), **4** (Kokonaski-999 in view of Brunton), **5** (Hattori-913), **6** (Delorenzo § 102), and **7** (Delorenzo § 103). In my opinion, Petitioner fails to show claim 1 is anticipated or rendered obvious under any of these grounds. I will discuss each ground separately. For clarity, **Ground 3** (Brunton in view of Carling) only applies to dependent claims 7, 8, and 13 (which depend from claim 1).

1. Brunton (Grounds 1-2) Does Not Anticipate or Render Obvious Independent Claim 1

76. In my opinion, Brunton does not anticipate or render obvious claim 1. Brunton is the only reference asserted under **Grounds 1-2** by Petitioner and Dr. Feland. Petitioner and Dr. Feland fail to demonstrate that Brunton anticipates or renders obvious claim 1 at least because Brunton does not disclose or suggest limitation 1[i] and the *constrain* limitation ("*wherein the first and second electrical conductors are configured to couple the electronics module to the first temple to constrain the electronics module*"). Petitioner and Dr. Feland contend that Brunton's disclosure of hearing-aid-tubular-contact pins being "frictionally retained" renders the *constrain* limitation obvious. I disagree as I will explain in detail further below. Furthermore, because Petitioner and Dr. Feland fail to show that Brunton discloses

or teaches independent claim 1 under **Grounds 1-2**, **Grounds 1-2** also fail to demonstrate that Brunton discloses or renders obvious dependent claims 2-4, 9, and 12.

77. First, the *constrain* limitation as claimed in 1[i] requires that the electrical conductors physically hold or secure the *electronics module* in place via a physical insertion and restrain the *electronics module* by applying a force to a surface or component. The ’174 patent explains that “‘constrain’ may refer to when the first electrical conductor is configured to provide support (i.e., a restraining force) for the electronics module to retain the module in a fixed position within the temple. That is, the first electrical conductor may be configured to ***hold the electronics module in place***.” (EX-1001, ’174 patent, 11:52-57 (emphasis added).) The electrical conductor “may be ***inserted through an opening of the electronics module and apply pressure to a surface or a component therein***, which ***thereby restricts the module from being removed*** from the temple or moved within the temple. In this manner, the conductor may hold or restrain one end of the electronics module in place (or substantially in place).” (*Id.*, 11:59-65 (emphasis added).)

78. To demonstrate the *constrain* limitation as required by the ’174 patent, I present Figure 16 of the ’174 patent illustrated below. Figure 16 shows a closeup of the eyewear of the ’174 patent and the mechanical setup in which the electronics module is physically secured without minor movement being allowed. As shown,

the electrical conductors (107 and 108) and fastener (105) apply a mechanical tightening force (i.e., the force used to clamp or join objects together, indirectly related to the torque applied) to physically secure the electronics module (106):

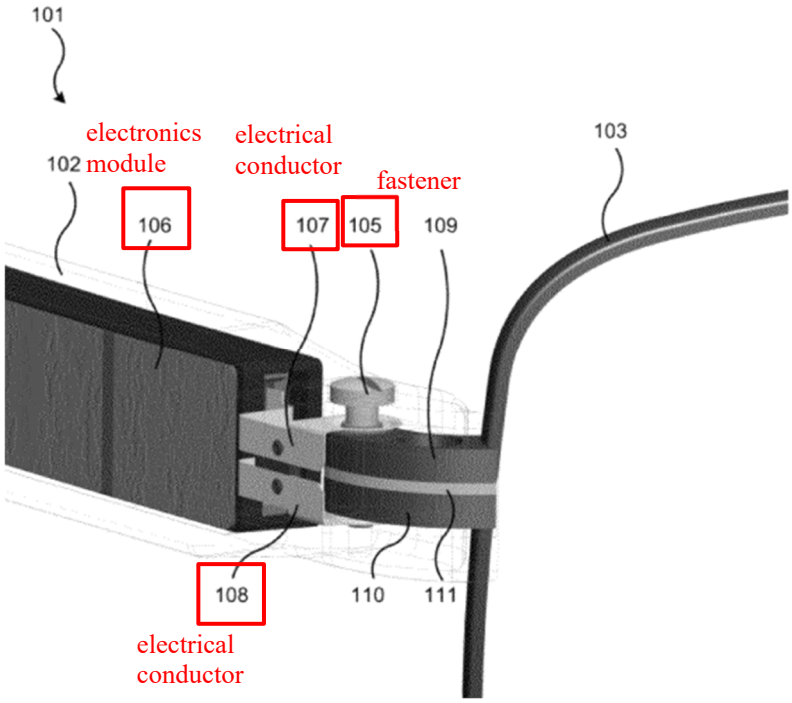

(EX-1001, '174 patent, Figure 16 (annotations added.)

79.In

80. In addition, the specification for the '174 patent distinguishes between *constrain* and *substantially constrain*. In my opinion, this would have further clarified to a POSITA that *constrain* requires physical restraint ***and*** no minor movements. As stated by the specification, "substantially constrain" allows for "some minor movement of the electronics module within the temple, but the conductor may generally hold the electronics module within the temple in place (such that it remains in an operative position)." (EX-1001, '174 patent, 11:65-12:3.)

The claim language *substantially* is notably absent from claim 1 while appearing in claims 8 ("*substantially within the hinge*") and 15 ("*substantially within a temple*").) Therefore, as indicated by the specification and claim language, *constrain* as claimed is distinct from *substantially constrained* and furthermore does not allow for minor movements. Instead, as required by the claim language and specification, the *constrained electronics module* must be held fixed in place. *Constrain* does not merely "generally hold" the module and allow for movements.

81. Furthermore, a POSITA would have further understood that Petitioner's and Dr. Feland's "frictionally retained" argument for contact pins *constraining* a hearing aid unit was inconsistent with the prosecution history of the '174 patent. In an office action response, Patent Owner stated that "[t]he specification at paragraphs [0074]-[0076] clearly defines a conductor that 'couples' a module to the frame as physically securing or applying a force to the module, as opposed to simply providing an electrical connection." (EX-2011, '174 patent file history, August 23, 2013, office action response, 152.) Therefore, in my opinion, a POSITA would have further understood that *constrain* requires a restraining force and retaining the *electronics module* in a fixed position as demonstrated from the prosecution history. A POSITA would have further understood that mere friction, as contended by Petitioner and Dr. Feland, was not enough to *constrain* as demonstrated by the specification and prosecution history of the '174 patent.

82. Second, in my opinion, Petitioner and Dr. Feland do not show that Brunton's hearing-aid-contact pins disclose or teach *constraining* the electronics module as required by the '174 patent and limitation 1[i]. Petitioner and Dr. Feland contend that these contact pins *constrain* the electronics module by being "frictionally retained" and "coupling the hearing aid unit to the temple and constraining the hearing aid unit." (Petition, 20-21; EX-1002, Feland Decl., 39 ("Frictionally retaining the hearing aid unit's pins in the cavity means that the socket contacts couple the hearing aid unit to the temple and constrain the hearing aid unit.").)[1]

83. But in my opinion, Petitioner and Dr. Feland have only shown that Brunton's contact pins and sockets touch and assume to apply friction against each other. But even if that assumption is correct, Petitioner and Dr. Feland provides no evidence that a POSITA would have understood that Brunton's touching electrical

---

[1] *See* Ex-1003, 3:61-65 ("It will be understood that the units may be provided with any suitable number of contact pins and the sockets provided with a corresponding number of tubular contacts that are positioned to receive the pins and in which the pins are frictionally retained."); *id.*, claim 1 (The contacts being "frictionally retained in said sockets, whereby the contacts and sockets provides means for removing and replacing the unit including component parts of the hearing aid.")

connections as teaching sufficient frictional force to *constrain* an electronics module. Petitioner and Dr. Feland have not otherwise shown that these contact pins *constrain* the hearing aid unit as required by the patent. As an example, Petitioner does not show that Brunton's contact pins apply a tightening force with a fastener as exemplified by the '174 patent. *See*, *e.g.*, EX-1001, '174 patent, Figures 5, 14, and 16. Neither does Dr. Feland, only stating that there is some friction between Brunton's contact pins and sockets. *See* EX-1002, Feland Decl., 39 ("Frictionally retaining the hearing aid unit's pins in the cavity means that the socket contacts couple the hearing aid unit to the temple and constrain the hearing aid unit.").

84. In addition, Petitioner's contention regarding the contact pins being "frictionally retained" meeting the claim language is inconsistent with Petitioner's construction in the district court case. Brunton's contact pins are merely touching the contacts (conductors) within the sockets for establishing an electrical connection. The contact pins are not "frictionally retained" such that they *physically secure or provide a restraining force to the hearing aid to retain the hearing aid in a fixed position within the temple* consistent with the specification and claim language of the '174 patent. *See* Section IV.B, *supra*. This further demonstrates that Brunton's contact pins do not *constrain* Bruton's hearing aid in the manner required by limitation 1[i] of the '174 patent.

85. My review of Brunton confirms the above. Brunton's contact pins are simply inserted into the sockets for establishing an electrical connection with contacts. The contacts do not physically *constrain* the hearing aid as required by the '174 patent. As stated by Brunton, the ends of unit 17 which contain the hearing aid "are provided with contact pins, such as the pins 25 and 26, and these pins are adapted to be inserted in tubular contacts, such as the contacts 27 and 28, in the sockets 19 and 20, respectively, as shown in Figure 6." (Petition, 16 (quoting EX-1003, Brunton, 3:57-61).) Petitioner here has merely shown that the hearing-aid-contact pins are inserted into contacts and touching; Petitioner has not shown that these contact pins are providing a restraining force to *constrain* the hearing aid and physically hold it in place as required by the '174 patent.

86. As an illustrative example, I show Figure 6 of Brunton below. As illustrated below, Figure 6 of Brunton shows hearing aid unit 17 (orange) with pins 25 and 26 (red) inserted into tubular contacts 27 and 27 (green) and sockets 19 and 20 (blue):

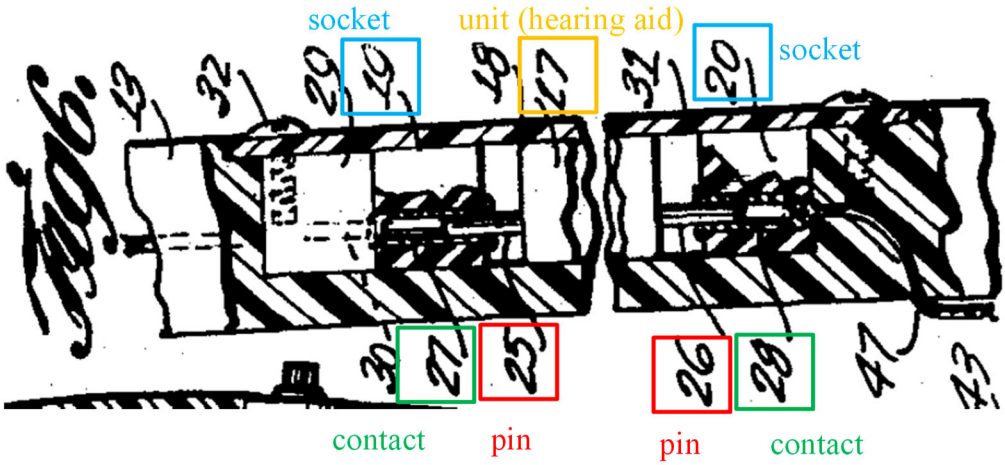

(EX-1003, Brunton, Figure 6 (annotations added).)

87. Petitioner has not shown that Brunton's electrical conductors *constrain* the hearing aid unit and physically hold it in place in a fixed position. Instead, Brunton discloses an entirely different component for providing any sort of physical security. Brunton describes a cover plate that physically secures the sockets (but not the contact pins): "[t]he sockets for the transistor and unit, such as the sockets 1 and 20, may be frictionally held in the cavity or may be embedded in the material of the temple, as may be desired. In the design shown, the temple is provided with a cover plate 31 that is secured in position over the unit 17 and the transistor 29 with screws 32." (EX-1003, Brunton, 3:71-4:1.) Furthermore, I note that nowhere in the Petition or Dr. Feland's opinions is Brunton's use of cover plate and screws for securing its components addressed. (*See* Petition, 20-21; EX-1002, Feland Decl., ¶64.) In my

opinion, a POSITA would have understood that it is the cover plate—***not*** the contact pins or socket contacts—that is holding Brunton's components in place.

88. As another illustrative example, I present Brunton Figure 7 below with annotations added. Brunton Figure 7 demonstrates cover plate (orange) secured with a screw (red) to the temple (blue) as well as a wire (green).

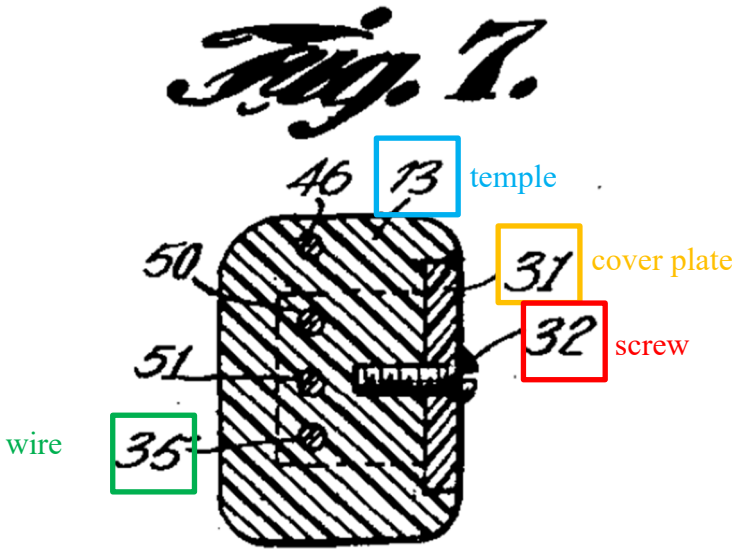

(EX-1003, Brunton, Figure 7 (annotations added).)

89. Brunton does not otherwise disclose or suggest that its contact pins are *constraining* anything and physically holding them in place. (*See* EX-1003, Brunton, 3:30-33 ("Figure 7 is a cross section through one of the temples taken on line 77 of Figure 2 showing the contact pins and sockets whereby the hearing aid unit is removable and replaceable.").) Therefore, in my opinion, not only have Petitioner and Dr. Feland not shown that Brunton's contact pins are actually physically constraining the hearing aid unit as the '174 patent requires its *conductors* to

constrain the *electronics module*, but my review of Brunton confirms that the only parts that are physically constraining anything in manner consistent with *constrain* as required by the patent are traditional cover plates and screws.

90. In my opinion, a POSITA would not have understood that the disclosure of a cover plate and screws discloses or suggests that it is the conductors that are used to physically restrain a device such as a hearing aid. Instead, in my opinion, a POSITA would have understood from Brunton's disclosure of a cover plate and screws that Brunton teaches using those traditional materials for physically *constraining* the parts and components in Brunton's eyewear. A POSITA, therefore, would not have considered using conductors or the contact pins in Brunton for physically securing the hearing aid unit. Furthermore, a POSITA would have found Brunton's cover plate and screws to be superfluous if they were not the components used to physically secure the components within Brunton's eyewear. In other words, a POSITA would not have considered using Brunton's contact pins for physically securing the hearing aid unit to the temple because that was the role of the parts such as cover plates, screws, and other fastener-like components. Brunton does not otherwise disclose or suggest that the contact pins or any other conductor is used to physically restrain the hearing aid unit or related devices.

91.Therefore, in my opinion, Petitioner and Dr. Feland fail to show that Brunton discloses or renders obvious limitation 1[i] ("*wherein the first and second*

electrical conductors are configured to couple the electronics module to the first temple to constrain the electronics module") of the '174 patent. Therefore, Petitioner and Dr. Feland fail to show under **Grounds 1-2** that claim 1 is anticipated or rendered obvious based at least on this deficiency. Furthermore, Petitioner's and Dr. Feland's failure to demonstrate claim 1 is anticipated or rendered obvious means that Petitioner and Dr. Feland also fail to show that dependent claims 2-4, 9, and 12 are anticipated or rendered obvious under **Grounds 1-2**.

2. Kokonaski-999 in View of Brunton (Ground 4) Does Not Render Claim 1 Obvious

92. In my opinion, Kokonaski-999 in view of Brunton also does not render obvious claim 1. Petitioner and Dr. Feland fail to demonstrate that Kokonaski-999 in view of Brunton renders claim 1 obvious under **Ground 4**. In addition, because Petitioner and Dr. Feland fail to show that Kokonaski-999 in view of Brunton teaches independent claim 1, Petitioner and Dr. Feland also fail to demonstrate that Kokonaski-999 in view of Brunton renders obvious dependent claims 2, 4-6, 9, 12, and 14 under **Ground 4** as well.

93. As I explained in the previous section for Grounds 1-2 and Brunton, Petitioner and Dr. Feland fail to show that Brunton renders claim 1 obvious and, in particular, that Brunton teaches or suggests limitation 1[i] ("*wherein the first and second electrical conductors are configured to couple the electronics module to the first temple to constrain the electronics module*"). Petitioner and Dr. Feland do not

further show that adding Kokonaski-999 makes up for the deficiencies I previously explained for Brunton and Grounds 1-2. Petitioner states that "Kokonaski-999 discloses that 'the electronic module 202 can be positioned within the frame 102 (e.g., in an area or cavity of the frame 102) and can be removable and replaceable.' However, Kokonaski-999 ***does not expressly disclose a way to constrain electronic module in the cavity*** until the user decides to remove it." (Petition, 35 (quoting EX-1004, Kokonaski-999, ¶[0033] (emphasis added; emphasis removed)).)

94. In my opinion, Petitioner has not demonstrated that Kokonaski-999 teaches or suggests limitation 1[i] and the *constrain* limitation. Petitioner has simply pointed to the module in Kokonaski-999 being removable and replaceable. Petitioner has not shown that the conductors *constrain* the *electronics module* such that the module is physically held in place as required by the '174 patent claims. (*See, e.g.,* EX-1001, 19:26-30 ("[T]he portion 117 comprises an opening through which a fastener (not shown) is inserted through to hold the side of the exemplary electronics module 106 (i.e. the side opposite the one coupled by the portions 115 and 116 of the electrical conductors 107 and 108) in place." (emphasis added)).).

95. Petitioner and Dr. Feland further contend that a "POSITA would have been motivated by Kokonaski-999's disclosure of pins as the electronic module's 'first contacts' because they provide a basis for constraining the electronics module in the temple via sockets." (Petition, 36; EX-1002, Feland Decl., 55.) In other words,

Petitioner and Dr. Feland are reapplying their flawed analysis of Brunton's hearing-aid-tubular-contact pins being "frictionally retained" for the *constraining* limitation to Kokonaski-999 as well.[2] As previously explained, Petitioner and Dr. Feland fail to show that Brunton's hearing-aid-contact pins render obvious *constraining* an electronics module as required by the '174 patent. As I previously, a POSITA would not have been motived to use Brunton's contact pins and socket contacts to physically secure its hearing aid unit because Brunton already teaches using a cover plate and screws for securing its components. Furthermore, in my opinion, a POSITA would not have been motivated to combine Brunton with Kokonaski-999 to use sockets for physically securing a hearing aid unit (or an *electronics module*) for the same reasons: Brunton already teaches using a cover plate and screws. I again note that neither petitioner nor Dr. Feland address Brunton's disclosure of a cover plate and screws.

96. Petitioner and Dr. Feland—at best—show that Brunton's contact pins and sockets touch, but not that the pins physically constrain the hearing aid such that

---

[2] Petition, 36 ("[G]iven the fact that the first contacts 504 are tubular pins that protrude from the end of the housing 502 suggests to a POSITA that their purpose is to be received into the temple in, e.g., tubular sockets such as Brunton's."). *See also* Ex-1002, 55.

the hearing aid is physically held in place by the pins themselves (and not the cover plate described in Brunton Figure 7). Petitioner and Dr. Feland have not otherwise made up for this deficiency by pointing to Kokonaski-999 disclosing pins. Nor has Petitioner or Dr. Feland shown that Brunton's or Kokonaski-999's contact pins *physically secure or provide a restraining force to the hearing aid to retain the hearing aid in a fixed position within the temple* consistent with the construction Petitioner proffered in the district court case. Again, I refer to the construction the Petitioner contended for in the district court litigation. *See* Section IV.B, *supra*

97. Therefore, in my opinion, Petitioner and Dr. Feland fail to show that Kokonaski-999 in view of Brunton renders obvious limitation 1[i] ("*wherein the first and second electrical conductors are configured to couple the electronics module to the first temple to constrain the electronics module*") of the '174 patent. Therefore, Petitioner and Dr. Feland fail to show under **Ground 4** that claim 1 is rendered obvious based at least on this deficiency. Furthermore, Petitioner's and Dr. Feland's failure to demonstrate claim 1 is anticipated or rendered obvious means that Petitioner and Dr. Feland also fail to show that dependent claims 2, 4-6, 9, 12, and 14 are rendered obvious under **Ground 4**.

3. Hattori-913 (Ground 5) Does Not Render Claim 1 Obvious

98. In my opinion, Hattori-913 also does not render obvious claim 1. Petitioner and Dr. Feland fail to demonstrate that Hattori-913, an unexamined

Japanese patent application and the basis for **Ground 5**, renders claim 1 obvious. Furthermore, because Petitioner and Dr. Feland fail to show that Hattori-913 teaches independent claim 1, **Ground 5** also fails to demonstrate that Hattori-913 renders obvious dependent claims 2, 5, 6, 12, and 13.

99. Petitioner relies on Hattori-913's ZEBRA connector as purportedly rendering the *constrain* limitation obvious. (*See* EX-1001, '174 patent, cl. 1[i] ("*wherein the first and second electrical conductors are configured to couple the electronics module to the first temple to constrain the electronics module*").) But Petitioner an Dr. Feland fail to show that Hattori-913's "zebra connector"[3] connected to an integrated circuit teaches *constraining* an electronics module as claimed by the '174 patent. Petitioner states that "zebra connector 18 [24] is an elastomeric material that applies pressure to the output terminal group 23 by compressing against it, establishing a secure electrical connection and also coupling the integrated circuit to the temple to retain it in a fixed position." (Petition, 50-51.) In my opinion, there are numerous issues with Petitioner's and Dr. Feland's positions.

---

[3] A ZEBRA® connector is a trademarked elastomeric connector that consists of alternating conductive and insulating regions in a rubber or elastomer matrix. A ZEBRA connector has conductive properties with different values in different directions or areas.

100. First, as stated by the Petitioner explains, a ZEBRA elastomeric connector is a common interconnection device used in electronics that implements alternating conductive and non-conductive layers . (*See* Petition, 38-39 ("A zebra connector is a well-known electrical connector composed of alternating layers of conductive and insulating materials, usually rubber or elastomeric matrix, which allows the connector to transmit multiple electrical signals while maintaining excellent electrical conductivity and mechanical stability."); *see* EX-1002, Feland Decl., 67 (similar).) As stated above, it is Petitioner's position that a ZEBRA connector *constrains* an electronics module. I disagree. In my opinion, a POSITA would have understood an elastomeric material applying pressure to keep conductive parts in contact to disclose or teach a mechanism for *constraining* an *electronics module* as required by the claims and intrinsic record. All Petitioner's evidence shows is that Hattori-913's ZEBRA connector makes conductive parts touch and maintain contact for an electrical connection. This does not disclose or render obvious constraining Hattori-913's integrated circuit by restraining it in place, as re-quired by the '174 patent claims.

101. Second, Petitioner and Dr. Feland assume that ZEBRA connector 24 is part of the temple itself based on the translated passage "zebra connector 24 embedded in the temple." *See* Petition, 6 (quoting EX-1006, Hattori-913, 68); EX-1002, Feland Decl., 68. Based on this assumption, Petitioner and Dr. Feland contend (but do not

show) that ZEBRA connector 24 must therefore *couple* integrated circuit 18 to the *first temple.* I disagree.

102. Based on Petitioner's and Dr. Feland's contentions regarding Ground 5 for limitations 1[f]/1[h],[4] Petitioner contends that the "zebra connector is 'embedded in the temple,' and thus is coupled to the temple" for limitation 1[i].[5] (*See* Petition, 47.) In my opinion, a POSITA would not have concluded that Hattori-913's ZEBRA connector is "coupled" or attached to the temple as Petitioner contends for meeting limitation 1[i]. Petitioner is attempting to interpret that word "embedded" from its translation of Hattori-913 to imply that Hattori-913's ZEBRA connector is physically restrained or bound to the temple. But there is no such disclosure or teaching from Hattori-913. *See* EX-1006, Hattori-913, 68 ("CMOS circuit 19 and semiconductor integrated circuit 18 incorporating individual electronic components 20 such as capacitors and transistors are embedded in recess 21 processed in temple 1, and its +1 power terminal 22 is connected to battery 4, while its output terminal

---

[4] 1[f]/1[h] ("*wherein a first/second conductive path is provided from the first temple to the lens housing at least in part by the first/second electrical conductor*").

[5] 1[i] ("*wherein the first and second electrical conductors are configured to* ***couple*** *the electronics module to the first temple to constrain the electronics module*") (emphasis added).

group 23 is also connected to ***zebra connector 24 embedded in the temple***." (emphasis added).) Instead, the ZEBRA connector in Hattori-913 is merely placed in the temple. It is not physically restrained or bound to it.

103. As I previously mentioned, a second translation of Hattori-913 has been provided. (*See* EX-2018, Hattori-913 Second Translation.) Having reviewed this second translation, it is my opinion that a POSITA would have understood that the ZEBRA connector in Hattori-913 is merely placed within the temple (and not physically restrained or bound). The second translation of Hattori-913 states that the "semiconductor integrated circuit 18 incorporating a subcomponent 20 is incorporated into a ***recess 21*** machined in the temple 1," and "output terminal group 23 is connected to a zebra-type connector 24 also ***incorporated in the temple***." (EX-2018, Hattori-913 Second Translation, 68 (emphasis added).) In other words, as shown in the second translation, Hattori-913's integrated circuit 18 (and zebra-type connector 24) are simply placed (or "incorporated") in temple recess 21 and not physically restrained as Petitioner and Dr. Feland contend from the word "embedded" in the translation Petitioner provided.

104. To further demonstrate that Hattori-913 ZEBRA connector 24 is merely "incorporate" or placed within the temple (as opposed to being physically restrained or bound to it), I present Figure 6 of Hattori-913 below. (*See* EX-2018, Hattori-913 Second Translation, 68 ("zebra-type connector 24 also incorporated in the temple").)

As shown in Figure 6, ZEBRA connector 24 is illustrated as placed ("incorporated") within the temple of frame 11. It is not otherwise physically linked to the frame. Annotations have also been provided highlighting integrated circuit 18, and hinge connector 30:

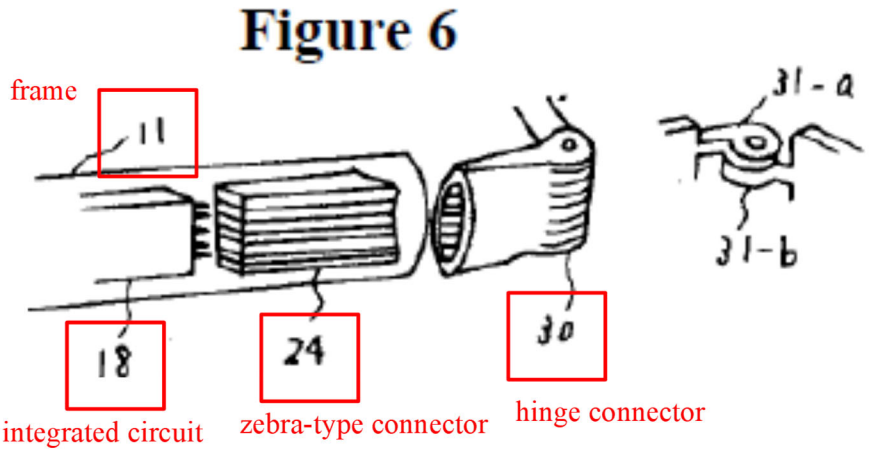

(EX-1006, Hattori-913, Figure 6.)

105. As I have shown above, in my opinion, a POSITA would have understood the ZEBRA connector in Hattori-913 is merely placed in the temple and not physically restrained or bound to it. To the extent that Petitioner or Dr. Feland contend that a POSITA would have understood that the ZEBRA connector is physically restrained to the temple from the Hattori-913 passage "embedded in the temple" I disagree. *See* Petition, 46 (quoting EX-1006, Hattori-913, 68) ("Hattori-913 discloses a first and second electrical conductor coupled to the first temple. For example, Hattori-913 discloses a 'zebra connector 24 embedded in the temple.'"); *see also* EX-1002, Feland Decl., 68. Dr. Feland appears to be applying a broad

interpretation of the word "coupled" to Hattori-913 and the ZEBRA connector. *See* EX-1002, Feland Decl., 68 ("According to the '174 patent, 'coupled' encompasses "any manner of connecting two components together in any suitable manner, such as by way of example only: … embedding within, embedded substantially within,….' Ex. 1001, 6:52-60; Supra Section III.C. Therefore, the zebra connector disclosed in Hattori-913 is coupled to the temple.").) But Dr. Feland is ignoring the physical *constraint* requirement of claim 1.[6] Therefore, even based on the translation provided by Petitions and the "embedded in the temple" passage, in my opinion a POSITA would not have understood that Hattori-913's ZEBRA connector is physically restrained to the temple itself or restrains the integrated circuit.

106. Third, Petitioner and Dr. Feland have not shown that any *conductors* in Hattori-913 are actually *constraining* Hattori-913's integrated circuit as required by claim 1 of the '174 patent. Petitioner cites nothing from Hattori-913 that discloses or suggests use of conductors to restrain the integrated circuit. Petitioner and Dr. Feland merely show that an elastomeric material, in other words a flexible or rubber-like material, keeps conductors in contact. (*See* Petition, 51 (quoting EX-1006,

---

[6] 1[i] ("*wherein the first and second electrical conductors are configured to couple the electronics module to the first temple to* ***constrain the electronics module***") (emphasis added).

Hattori-913, 6:50-53) ("Zebra connectors 'make reliable connections by exerting pressure between contacting surfaces.'") EX-1002, Feland Decl., 73 (same).) Petitioner and Dr. Feland have not shown anything *constraining* an *electronics module* (in this case, according to Petitioner and Dr. Feland, Hattori-913's integrated circuit 18), let alone whether such *constraint* is by a conductor as required by the '174 patent. (*See also* Section IV.B, *supra* (Petitioner's district court construction: "physically secure or provide a restraining force to the electronics module to retain the module in a fixed position within the temple").)

107. At best, Petitioner and Dr. Feland show that Hattori-913's contact pins from integrated circuit 18 are inserted into ZEBRA connector 24. But there is no constraint as required by claim 1 of the '174 patent. All of these components are simply placed into frame 11 and there is no indication from Hattori-913 that they are physically held in place by any other components such as, for example, a fastener or cover plate. Petitioner and Dr. Feland do not identify any disclosure or suggestion that the contact pins *constrain* these components. Petitioner and Dr. Feland have also not shown anything from Hattori-913 that discloses or suggests *constraining* integrated circuit 18 as required by the '174 patent.

108. For the reasons I have explained above, Petitioner and Dr. Feland fail to show that Hattori-913 renders obvious limitation 1[i] ("*wherein the first and second electrical conductors are configured to couple the electronics module to the first*

temple to constrain the electronics module") of the '174 patent. Therefore, Petitioner and Dr. Feland fail to show under **Ground 5** that claim 1 is rendered obvious based at least on this deficiency. Furthermore, Petitioner's and Dr. Feland's failure to demonstrate claim 1 is rendered obvious means that Petitioner and Dr. Feland also fail to show the same for dependent claims 2, 5, 6, 12, and 13 under **Ground 5**.

4. Delorenzo (Grounds 6-7)) Does Not Render Claim 1 Obvious

109. In my opinion, Delorenzo also does not anticipate or render obvious claim 1. Petitioner and Dr. Feland fail to demonstrate that Delorenzo, the basis for **Grounds 6-7**, anticipates or renders obvious claim 1. Furthermore, because Petitioner and Dr. Feland fail to show Delorenzo discloses or teaches independent claim 1, **Grounds 6-7** also fail to demonstrate that Delorenzo discloses or renders obvious dependent claims 2-4 and 9-13.

110. Petitioner and Dr. Feland rely on Delorenzo's temples and general electronic components for limitation 1[d] ("*an electronics module disposed at least partially within the first temple*"). However, they do not identify any disclosure that teaches or suggests the claimed *electronics module*. Petitioner states that "Delorenzo discloses that electronic components are housed in temple 15 of its eyewear, as shown in Figure 3." (Petition, 56.) As an illustrative example, I present Delorenzo Figures 3 and 2 with Petitioner's annotations. Nowhere does Petitioner identify an electronics module in Figure 3 (or Figure 2):

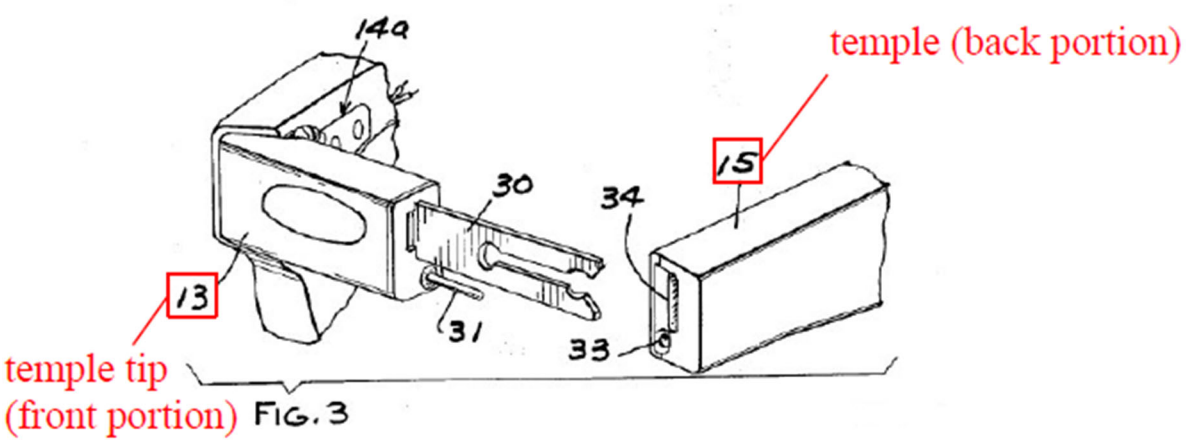

(EX-1007, Delorenzo, Figure 3 (annotations by Petitioner).)

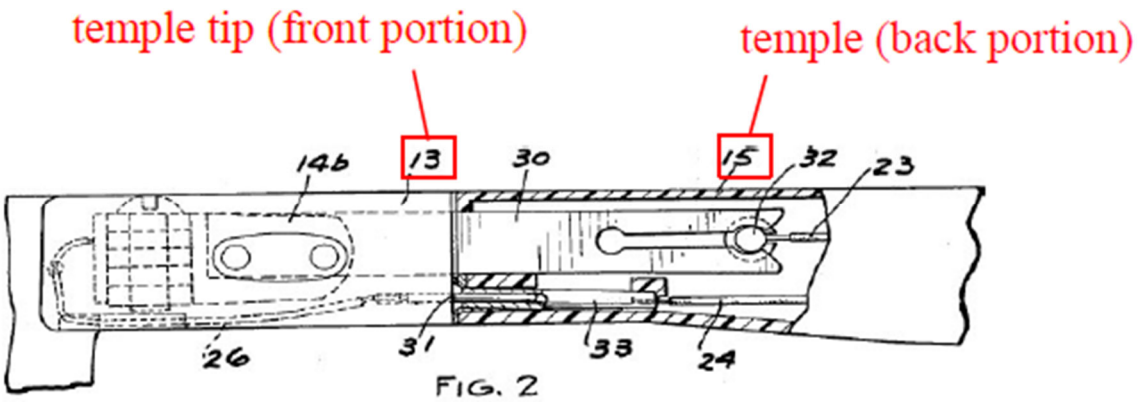

(EX-1007, Delorenzo, Figure 2 (annotations by Petitioner).)

111. Petitioner and Dr. Feland do not clearly identify what the contended *electronics module* that is disposed within a temple from Delorenzo is. The closest Petitioner and Dr. Feland come to identifying such an *electronics module* is "[o]ne of the temples 15a is provided with a microphone element 16 while the other has an amplifier element 17 removably embedded therein…Accordingly, temple 15 is an electronics module disposed at least partially within the fully assembled temple of

the eyewear (temple tip 13 plus temple 15)." (Petition, 57 (quoting EX-1007, Delorenzo, 2:9-11); *see also* EX-1002, Feland Decl., 80 (same).) But Petitioner and Dr. Feland's contentions as to what the *electronics module* in Delorenzo is unclear. Petitioner and Dr. Feland do not specifically identify what the *electronics module* disposed in the temple is beyond generally pointing to the temple itself and the general components within (e.g., microphone element, amplifier element). As I will explain further below, without clearly identifying what the *electronics module* in Delorenzo is, Petitioner and Dr. Feland cannot identify in what manner or what specific parts *constrain* the *electronics module* as part of limitation 1[i] ("*wherein the first and second electrical conductors are configured to couple the electronics module to the first temple to constrain the electronics module*"). Therefore, by merely pointing to the temple itself, Petitioner and Dr. Feland fail to show Delorenzo anticipates or renders obvious 1[d] ("*an electronics module disposed at least partially within the first temple*") under Grounds 6-7.

112. As I indicated above, in addition to the issues I have explained for limitation 1[d], Petitioner and Dr. Feland also do not show that Delorenzo discloses or renders obvious limitation 1[i] ("*wherein the first and second electrical conductors are configured to couple the electronics module to the first temple to constrain the electronics module*"). Petitioner and Dr. Feland simply state that "each temple is mechanically and electrically interconnected to the other through the

eyeglass frame front." (Petition, 60 (quoting EX-1007, Delorenzo, 2:54-56 (emphasis removed)); EX-1002, Feland Decl., 82 (same).) As I alluded to in the previous paragraph, Petitioner's and Dr. Feland's failure to clearly identify any teaching of an *electronics module* in Delorenzo is exacerbated by its failure to identify conductors that *constrain* said (unidentified) *electronics module* or any other electrical components. Petitioner and Dr. Feland merely pointing to general electronic components in the temple and nothing more fails to show how a POSITA would understand that an *electronics module* is *constrained* by conductors and further fails to demonstrate Delorenzo discloses or renders obvious limitation 1[i]. (*See* Petition, 60 ("The electrical conductors at the front portion of the temple (temple tip 13) extend into and mechanically constrain the electronics module (temple 15) containing the electronic components."); EX-1002, Feland Decl., 84 (similar); *see also* EX-1007, Delorenzo, 2:44-46 ("[T]the bifurcated element 30 extends through passage 34 and mechanically connects onto post 32."), 2:49-54 ("connection between connectors 31, 33") (quoted by Petition, 60).)

113. Therefore, it is my opinion that Petitioner and Dr. Feland fail to show that Delorenzo discloses or renders obvious limitations 1[d] ("*an electronics module disposed at least partially within the first temple*") and 1[i] ("*wherein the first and second electrical conductors are configured to couple the electronics module to the first temple to constrain the electronics module*") in the challenged claim 1 of the

’174 patent. Therefore, Petitioner and Dr. Feland fail to show under **Grounds 6-7** that claim 1 is rendered obvious based on these deficiencies. Furthermore, Petitioner’s and Dr. Feland’s failure to demonstrate claim 1 is anticipated or rendered obvious means that Petitioner and Dr. Feland also fail to show that dependent claims 2-4 and 9-13 are anticipated or rendered obvious under **Grounds 6-7** as well.

5. Grounds 1-7 Do Not Anticipate or Render Obvious Dependent Claims 2-14

114. As I discussed in the previous sections, because Petitioner and Dr. Feland fail to demonstrate that Brunton (**Grounds 1-2**), Kokonaski-999 (**Ground 4**), Hattori-913 (**Ground 5**), or Delorenzo (**Grounds 6-7**) anticipate or render obvious claim 1, Petitioner and Dr. Feland further fails to demonstrate that these references anticipate or render obvious claims 2-14, all of which depend from claim 1. This includes claims 2, 4, 9, and 12 under **Ground 1** (Brunton § 102), claims 2-4, 9, and 12 under **Ground 2** (Brunton § 103), claims 7, 8, and 13 under **Ground 3** (Brunton in view of Carling), claims 2, 4-6, 9, 12, and 14 under **Ground 4** (Kokonaski-999 in view of Brunton), claims 2, 5, 6, 12, and 13 under **Ground 5** (Hattori-913), claims 2, 4, 9, 12, and 13 under **Ground 6** (Delorenzo § 102), and claims 2-4 and 9-13 under **Ground 7** (Delorenzo § 103).

115. For **Ground 3** (Brunton in view of Carling), Petitioner and Dr. Feland do not rely on Carling to render claim 1 obvious in addition to the arguments

previously made under **Grounds 1-2** in reliance on Brunton and the *constrain* limitation for 1[i] ("*wherein the first and second electrical conductors are configured to couple the electronics module to the first temple to constrain the electronics module*") previously discussed. Therefore, Petitioner's and Dr. Feland's reliance on Carling under **Ground 3** does not make up for the deficiencies in showing claim 1 is anticipated or rendered obvious by Brunton under **Grounds 1** and **2**. Therefore, **Ground 3** (Brunton in view of Carling; claims 7, 8, and 13) fails as well because Petitioner and Dr. Feland do not show claim 1 or any of the dependent claims are rendered obvious by Brunton (**Grounds 1-2**) or Brunton in view of Carling (**Ground 3**).

6. Grounds 8-9 Do Not Render Claim 15 Obvious 4

116. Claim 15 is the second independent claim of the '174 patent from which claims 16-19 depend from. I present claim 15 as 15[pre] through 15[c] as they are presented in the Petition below:

> 15[pre]A first method, comprising:
> 15[a] providing a capacitive touch switch;
> 15[b] disposing a plurality of electronic components on the capacitive switch; and
> 15[c] coupling the capacitive touch switch to a partial enclosure to constrain the capacitive touch switch.

117. In my opinion, Petitioner and Dr. Feland fail to show that independent claim 15 is rendered obvious under **Grounds 8** (Kokonaski-999 in view of Kokonaski-579) and **9** (Howell-596 in view of Eichelberger and Sikonowiz). For

Grounds 8-9, Petitioner and Dr. Feland in particular fail to show at least the preamble limitation of claim 15 ("*[a] first method*") is rendered obvious, and for this reason fail to show that each and every limitation is taught.

7. Kokonaski-999 in View of Kokonaski-579 (Ground 8) Does Not Render Claim 15 Obvious

118. In my opinion, Petitioner and Dr. Feland fail to show that Kokonaski-999 in view of Kokonaski-579 renders claim 15 obvious under Ground 8. Moreover, because Petitioner fails to show Kokonaski-999 in view of Kokonaski-579 teaches independent claim 15, **Ground 8** also fails to demonstrate that Kokonaski-999 in view of Kokonaski-579 renders obvious dependent claims 16-19.

119. Claim 15 requires "[a] first ***method***." Petitioner and Dr. Feland gloss over the "method" limitation and do not specifically address it in their contentions. (*See* Petition, 70-78; *id.*, 70 ("Kokonaski-999 discloses a method that involves providing a capacitive touch switch. For example, Kokonaski-999 discloses that "the electronic module 202 ***can include a switch or device to enable a user to interact with the electronic module 202***. The switch or device can be a press button switch, a capacitive switch (e.g., comprising a capacitive sense pad), a toggle switch or other manual switch." Ex.1004, ¶[0047]; *id.*, pp. 3637 (claims 24 and 28 reciting an electronic module with a capacitive switch and a user touching a capacitive switch.) Thus, Kokonaski-999 discloses providing a capacitive touch switch. Ex.1002, ¶¶192-193." (emphasis added)); EX-1002, Feland Decl., 93 (similar).)

120. Nowhere does Petitioner show where Kokonaski-999 or Kokonaski-579 teach or suggest the performance of a *method*, such as manufacturing steps or instructions, for limitations 15[a] (*providing a capacitive touch switch*), 15[b] (*disposing a plurality of electronic components on the capacitive switch*), and 15[c] (*coupling the capacitive touch switch to a partial enclosure to constrain the capacitive touch switch*). Nor does Petitioner explain how a POSITA would have understood that Kokonaski-999 or Kokonaski-579 teach or suggest performance steps for a method as required by the claim. Therefore, in my opinion, Petitioner and Dr. Feland have not shown how Kokonaski-999 in view of Kokonaski-579 teaches a "method" nor how a POSITA would have understood the same.

121. Therefore, in my opinion, Petitioner and Dr. Feland fail to show that Kokonaski-999 in view of Kokonaski-579 renders obvious the preamble limitation "*[a] first method*" in the challenged claim 15 of the '174 patent. Therefore, Petitioner and Dr. Feland fail to show under **Ground 8** that claim 15 is rendered obvious based at least on this deficiency. Furthermore, Petitioner's and Dr. Feland's failure to demonstrate claim 15 is rendered obvious means that Petitioner also fails to show the same for dependent claims 16-19 under **Ground 8**.

8. Howell-596 in View of Eichelberger (Ground 9) Does Not Render Claim 15 Obvious

122. It is further my opinion that Petitions and Dr. Feland fail to show that Howell-596 in view of Eichelberger and Sikonowiz, the bases for **Ground 9**, render

claim 15 obvious. Because Petitions and Dr. Feland fail to show Howell-596 in view of Eichelberger and Sikonowiz teaches independent claim 15, **Ground 9** also fails to demonstrate that Howell-596 in view of Eichelberger and Sikonowiz renders obvious dependent claims 16 and 18.

123. First, as I previously discussed for Ground 8, claim 15 requires *"[a] first **method**."* Petitioner and Dr. Feland fail to address this requirement and fail to show where in Howell-596 or Eichelberger a *method*—such as manufacturing steps or instructions—is taught or suggested. (*See* Petition, 81-84.) Petitioner claims that Howell-596 "shows in Figure 16D a method of making a UV detection module." (Petition, 82.) But this is not true. None of the materials Petitioner points to (paragraphs [0181], [0188]-[0191] and Figure 16D) even mention a method. The word "method" appears in only ***two*** unrelated and irrelevant passages in the body of Howell-596 (excluding the titles of other references). (*See id.*, [0009], [0238].) "Method" does not even appear in the body of Eichelberger. Petitioner has completely ignored this requirement and thus fails to show that each and every limitation of claim 15 is rendered obvious.

124. Second, it is my opinion that a POSITA would not have been sufficiently motivated to combine Howell-596 with Eichelberger. Howell-596 is predominantly about an "electronic circuit [with] radiation monitoring capability, and "[i]n one implementation, the electronic circuit is provided within eyewear so

that the user of the eyewear is able to easily monitor their exposure to radiation." (EX-1015, Howell-596, Abstract.) Petitioner and Dr. Feland rely on Eichelberger for disclosing a capacitive touch switch and claim a POSITA would have found combining these two references obvious. (*See* Petition, 82 ("Eichelberger's capacitive touch switch includes a double-sided printed circuit board 16 on which electrodes 18b and 18c are fabricated."); *see also* EX-1010, Eichelberger, Abstract (A "capacitive touch entry structure [that] utilizes an array of at least one capacitive touch sensor" on a printed circuit board.).) I disagree.

125. In my opinion, a POSITA would not have been motivated to combine a capacitive touch switch with Howell-596's UV detection system or radiation-detection glasses as argued by Petitioner. Howell-596 states "[a]s shown in FIG. 16D, the switch base 1662 can attach to the substrate 1502 and thereby support the switch 1664 that protrudes outside of the eyewear housing 1660 (or is otherwise accessible) so that a user can activate the switch (e.g., press the button)." (*See also* EX- Howell-596, [0193] ("One type of switch is a button switch, such as a push-button switch. As an example, the switch can serve as a reset switch, an on/off switch, or an on (and reset) switch.").)

126. I disagree with Dr. Feland's opinion that "[i]ncorporating Eichelberger's capacitive touch switch into Howell-596's eyeglasses involves nothing more than identifying a long-known example of the genus of switches (capacitive touch

switches) that Howell-596 expressly discloses and using that specific example according to its fundamental purpose of detecting capacitance levels to trigger a switch in functionality." EX-1002, Feland Decl., 83-84. In my opinion, a POSITA would have understood that a mechanical button switch, as taught, would have been a more reliable solution for Howell-596's glasses both in terms of energy use and efficiency and functional reliability. A POSITA, thus, would not have been motivated to implement the added expense and complication of a capacitive touch switch for Howell-596's glasses when the same would not have needed or desired such a change in the first place. Petitioner and Dr. Feland have therefore failed to show that a POSITA would have been sufficiently motivated to combine Howell-596 and Eichelberger.

127. Therefore, in my opinion, Petitioner and Dr. Feland fail to show that Howell-596 in view of Eichelberger renders obvious the preamble limitation "*[a] first method*" of claim 15 of the '174 patent. Therefore, Petitioner and Dr. Feland fail to show under **Ground 9** that claim 15 is rendered obvious based at least on this deficiency. Furthermore, Petitioner's and Dr. Feland's failure to demonstrate claim 15 is rendered obvious means that Petitioner and Dr. Feland also fail to show that dependent claims 16 and 18 under **Ground 9**.

9. Petitioner Fails to Establish that a POSITA Would Have Been Motivated to Combine Howell-596 and Eichelberger (Ground 9) to Render Claim 16 Obvious

128. In addition to the above, it is further my opinion that a POSITA would not have been sufficiently motivated to combine Howell-596 with Eichelberger to render claim 16 obvious. Claim 16 adds the following additional limitation: "*[t]he first method of claim 15, further comprising the step of disposing the enclosure substantially within a temple of an eyeglass frame*." Howell-596 is primarily about an "electronic circuit [with] radiation monitoring capability." It is not focused on eyewear or fashionable eyewear with electronic capabilities. (*See* EX-1015, Howell-596, Abstract.).

129. One embodiment of Howell-596 happens to have "the electronic circuit is provided within eyewear so that the user of the eyewear is able to easily monitor their exposure to radiation." EX-1015, Howell-596, Abstract. However, a POSITA in my opinion would have understood that Howell-596 is primarily about electronic circuits and radiation monitoring. Further, a POSITA would not have understood the teachings of Howell-596 to be related "the inclusion of electronics [to] not limit the fashion design of the eyeglass frame or limit the materials of eyeglass frame." (EX-1001, '174 patent, 1:27-28.) Or a "coupling the capacitive touch switch to a partial enclosure to constrain the capacitive touch switch." (EX-1001, '174 patent, cl. 15[c].) Eichelberger, a reference Petitioner and Dr. Feland rely on for a capacitive

touch switch, does not change this. Therefore, in my opinion, a POSITA would have not found Howell-596 to be an analogous reference to the fashionable-electronic eyewear of the ’174 patent and would not be motivated to for combination with other references with respect to electronic eyewear.

130. Furthermore, with respect to claim 16, Petitioner simply states that “Howell-596 disclose[s] this limitation” and points to Figure 17B with “module housing 1700 (with internal electrical components) ‘[] contained by the eyewear housing 1720.’” (Petition, 84-85; *see also* EX-1002, Feland Decl., 109-110 (same).) Petitioner does not further address method claim 16 and the additional step of actually “*disposing the enclosure substantially within a temple of an eyeglass frame*.” Therefore, in addition to the response previously discussed, Petitioner and Dr. Feland further fail to show that Howell-596 in view of Eichelberger renders obvious the challenged claim 16 (“*The first method of claim 15, further comprising the step of disposing the enclosure substantially within a temple of an eyeglass frame*.”) of the ’174 patent. Therefore, Petitioner and Dr. Feland fail to show under **Ground 9** (Howell-596 in view of Eichelberger and Sikonowiz) that claim 16 is rendered obvious.

10. Petitioner Fails to Establish that Dependent Claim 18 is Rendered Obvious Under Ground 9

131. Petition only relies on Sikonowiz for claim 18 (“*The first method of claim 15, further comprising the step of applying a conformal coating to the plurality*

of electronic components.") under **Ground 9**. Petitioner relies on Sikonowiz for "applying a conformal coating as a well-known step of final PCB assembly." (Petition, 85.) Petitioner does not otherwise rely on Sikonowiz to make up for its deficiencies in rendering independent claim 15 (from which claim 18 depends on) obvious.

132. It is therefore my opinion that Petitioner further fails to show that Howell-596 in view of Eichelberger and Sikonowiz renders obvious claim 18 ("*The first method of claim 15, further comprising the step of applying a conformal coating to the plurality of electronic components*.") of the '174 patent. Therefore, Petitioner and Dr. Feland fail to show under **Ground 9** (Howell-596 in view of Eichelberger and Sikonowiz) that claim 18 is rendered obvious.

VII. CONCLUSION

133. For at least the foregoing reasons, it is my opinion that Petitioner's grounds do not render obvious claims 1-19 of the '174 patent.

I hereby declare that all statements made herein of my own knowledge are true and that all statements made on information and belief are believed to be true; and further that these statements were made with the knowledge that willful false statements and the like so made are punishable by fine or imprisonment, or both, under Section 1001 of Title 18 of the United States Code.

Executed this 31st day of March, 2025 in Des Moines, Iowa.

Respectfully submitted,

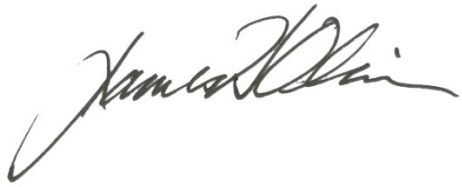

James H. Oliver, Ph.D.