US006185537B1

(12) **United States Patent**
Oh et al.

(10) **Patent No.: US 6,185,537 B1**
(45) **Date of Patent: Feb. 6, 2001**

(54) **HANDS-FREE AUDIO MEMO SYSTEM AND METHOD**

(75) Inventors: **Stephen S. Oh**, Richardson; **Stephen Ira Popik**, Plano, both of TX (US)

(73) Assignee: **Texas Instruments Incorporated**, Dallas, TX (US)

(*) Notice: Under 35 U.S.C. 154(b), the term of this patent shall be extended for 0 days.

(21) Appl. No.: **08/984,221**

(22) Filed: **Dec. 3, 1997**

Related U.S. Application Data

(60) Provisional application No. 60/032,507, filed on Dec. 3, 1996.

(51) **Int. Cl.**[7] **G10L 15/22**
(52) **U.S. Cl.** **704/275**; 704/272
(58) **Field of Search** 704/275, 270, 704/272, 200, 257, 250, 246, 256

(56) **References Cited**

U.S. PATENT DOCUMENTS

4,348,550 * 9/1982 Pirz et al. 379/357
4,426,733 * 1/1984 Brenig 455/79
4,520,576 * 6/1985 Molen 34/534
4,737,976 * 4/1988 Borth et al. 455/563
4,737,979 * 4/1988 Hashimoto 379/82
5,014,317 * 5/1991 Kita et al. 395/2.83
5,420,912 * 5/1995 Kopp et al. 455/563
5,477,511 * 12/1995 Engelhardt 369/25
5,481,645 * 1/1996 Bertino et al. 395/2.79
5,491,774 * 2/1996 Norris et al. 395/2.79
5,526,407 * 6/1996 Russell et al. 379/89
5,602,963 * 2/1997 Bissonnette et al. 395/2.84
5,657,380 * 8/1997 Mozer 379/88
5,684,506 * 11/1997 Taylor et al. 345/133
5,794,205 * 8/1998 Walters et al. 704/275
5,812,977 * 9/1998 Douglas 704/275
5,878,395 * 3/1999 Bennett 704/275
5,999,908 * 12/1999 Abelow 705/1

* cited by examiner

Primary Examiner—Richemond Dorvil
(74) *Attorney, Agent, or Firm*—Robert D. Marshall, Jr.; W. James Brady, III; Frederick J. Telecky, Jr.

(57) **ABSTRACT**

This invention (**10, 50**) uses an interface (**12, 52**) to receive a voice input from a user, and a speech recognition unit (**18, 54**) coupled to the interface (**12, 52**) to monitor the voice input and recognize a predetermined set of voice commands from the voice input. The speech recognition unit (**18, 54**) generates a command signal that corresponds to the recognized voice command, which is received by a controller unit (**20, 58**). The controller unit (**20, 58**) activates a speech acquisition unit (**16, 56**) coupled to the controller unit (**20, 58**) to collect and stop collecting the voice input in response to a control signal generated by the controller unit (**20, 58**). a memory (**24, 56**) is provided to store the collected voice input.

7 Claims, 5 Drawing Sheets

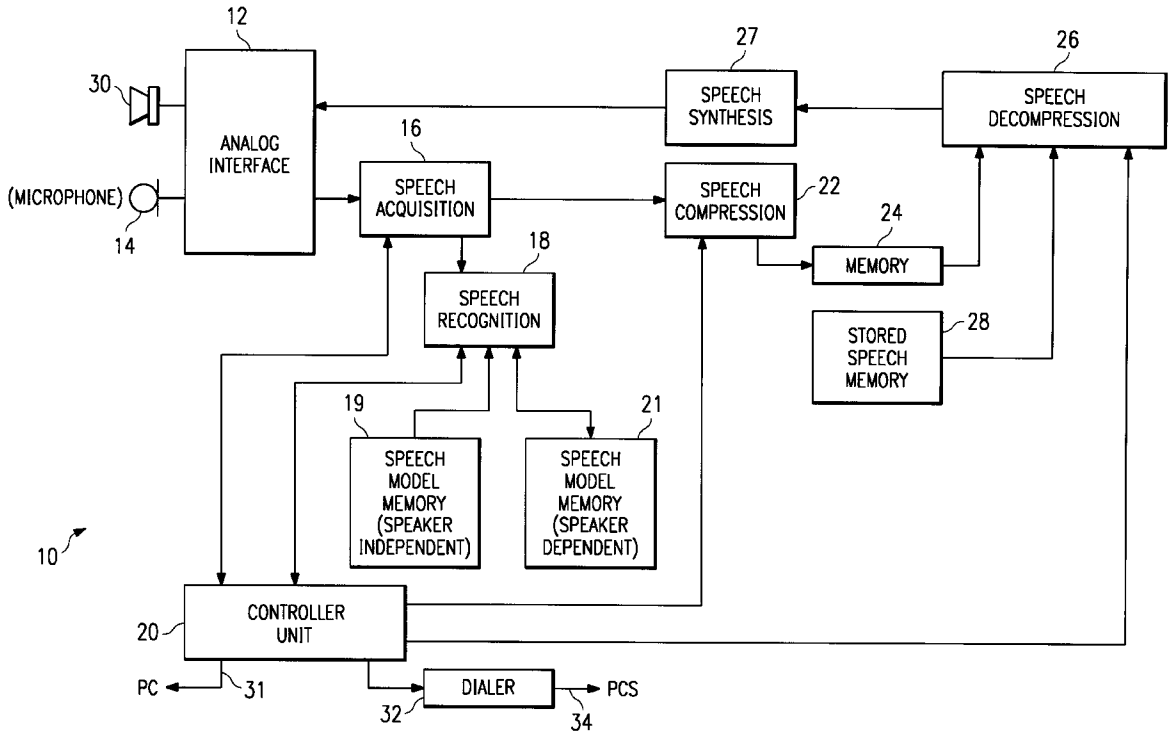

Luxottica Ex. 1012
IPR Petition USP 10,598,960

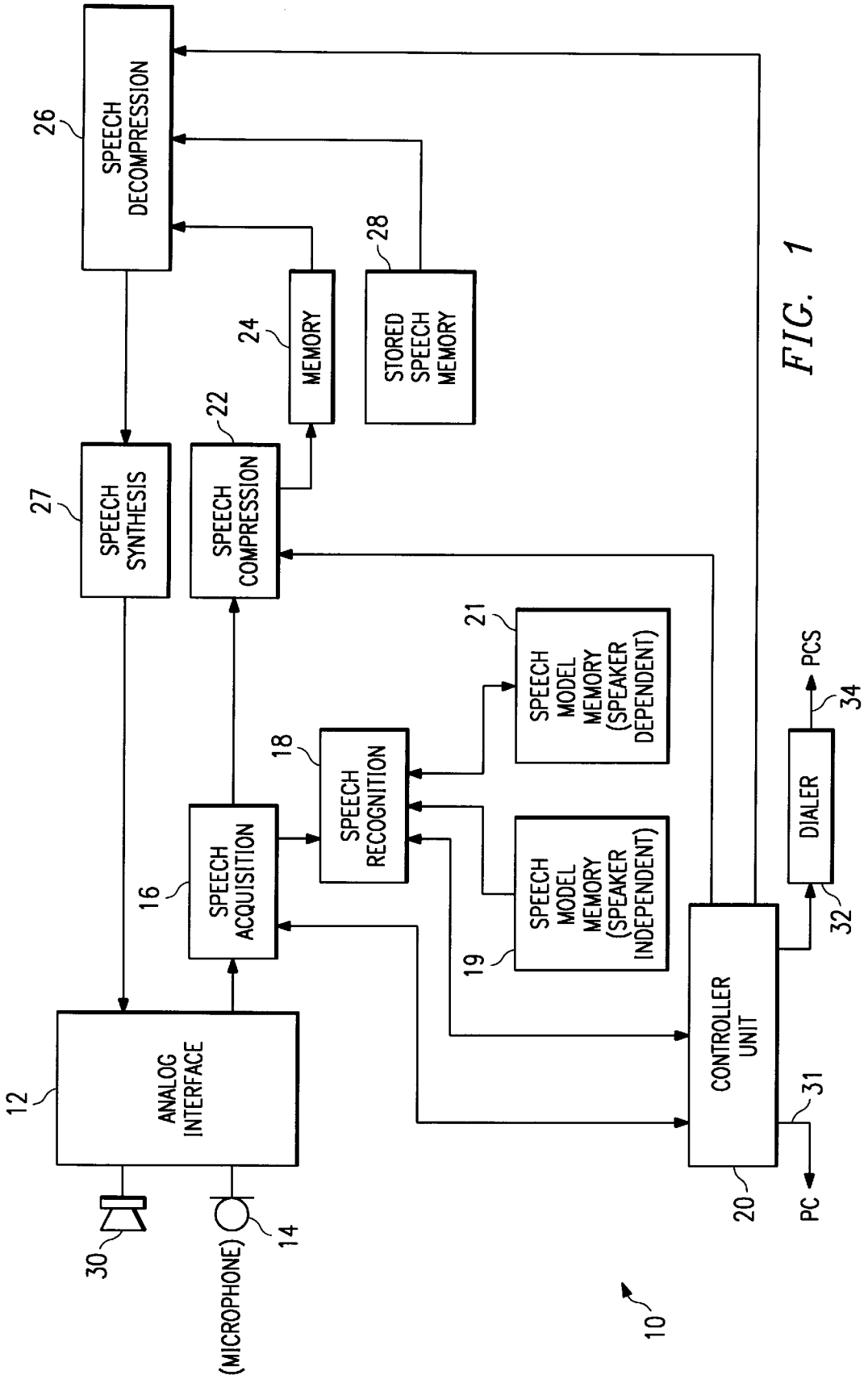
SPEECH DECOMPRESSION
26
SPEECH SYNTHESIS
27
MEMORY
24
STORED SPEECH MEMORY
28
SPEECH COMPRESSION
22
SPEECH MODEL MEMORY (SPEAKER DEPENDENT)
21
SPEECH RECOGNITION
18
SPEECH ACQUISITION
16
SPEECH MODEL MEMORY (SPEAKER INDEPENDENT)
19
ANALOG INTERFACE
12
CONTROLLER UNIT
20
DIALER
32
PCS
34
PC
31
(MICROPHONE)
14
30
10

FIG. 1

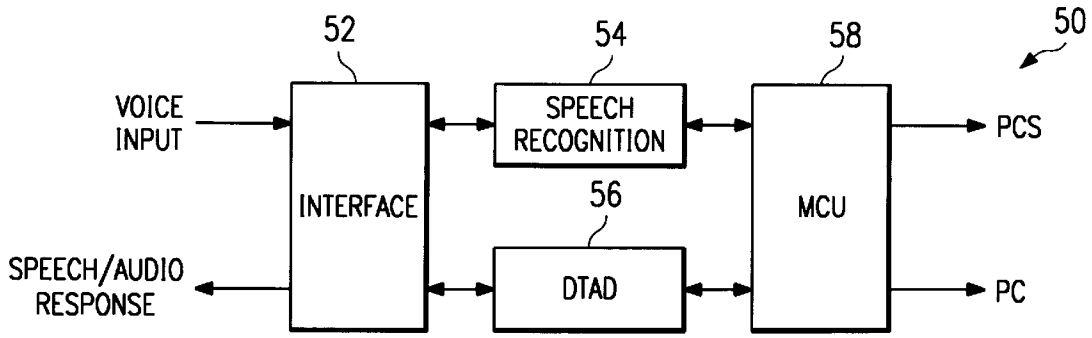
52
54
58
50
VOICE INPUT
INTERFACE
SPEECH RECOGNITION
MCU
PCS
56
SPEECH/AUDIO RESPONSE
DTAD
PC

FIG. 2

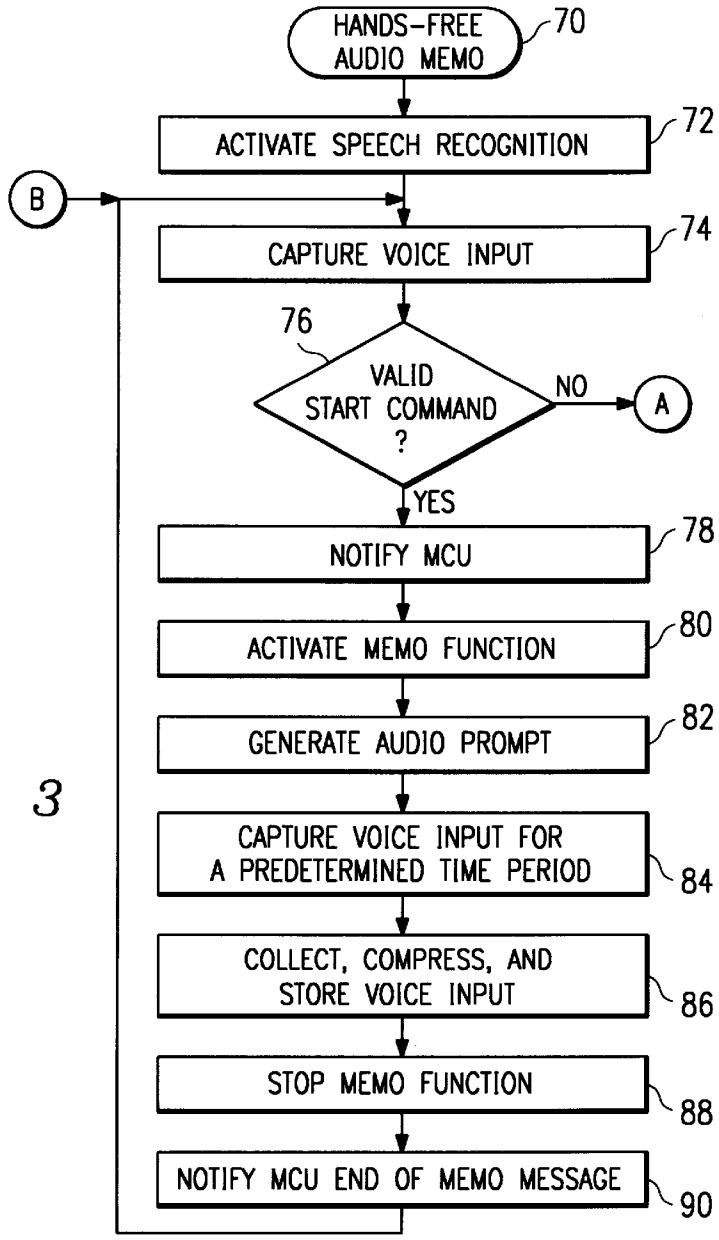
HANDS-FREE AUDIO MEMO
70
ACTIVATE SPEECH RECOGNITION
72
B
CAPTURE VOICE INPUT
74
76
VALID START COMMAND ?
NO
A
YES
NOTIFY MCU
78
ACTIVATE MEMO FUNCTION
80
GENERATE AUDIO PROMPT
82
CAPTURE VOICE INPUT FOR A PREDETERMINED TIME PERIOD
84
COLLECT, COMPRESS, AND STORE VOICE INPUT
86
STOP MEMO FUNCTION
88
NOTIFY MCU END OF MEMO MESSAGE
90

FIG. 3

FIG. 4

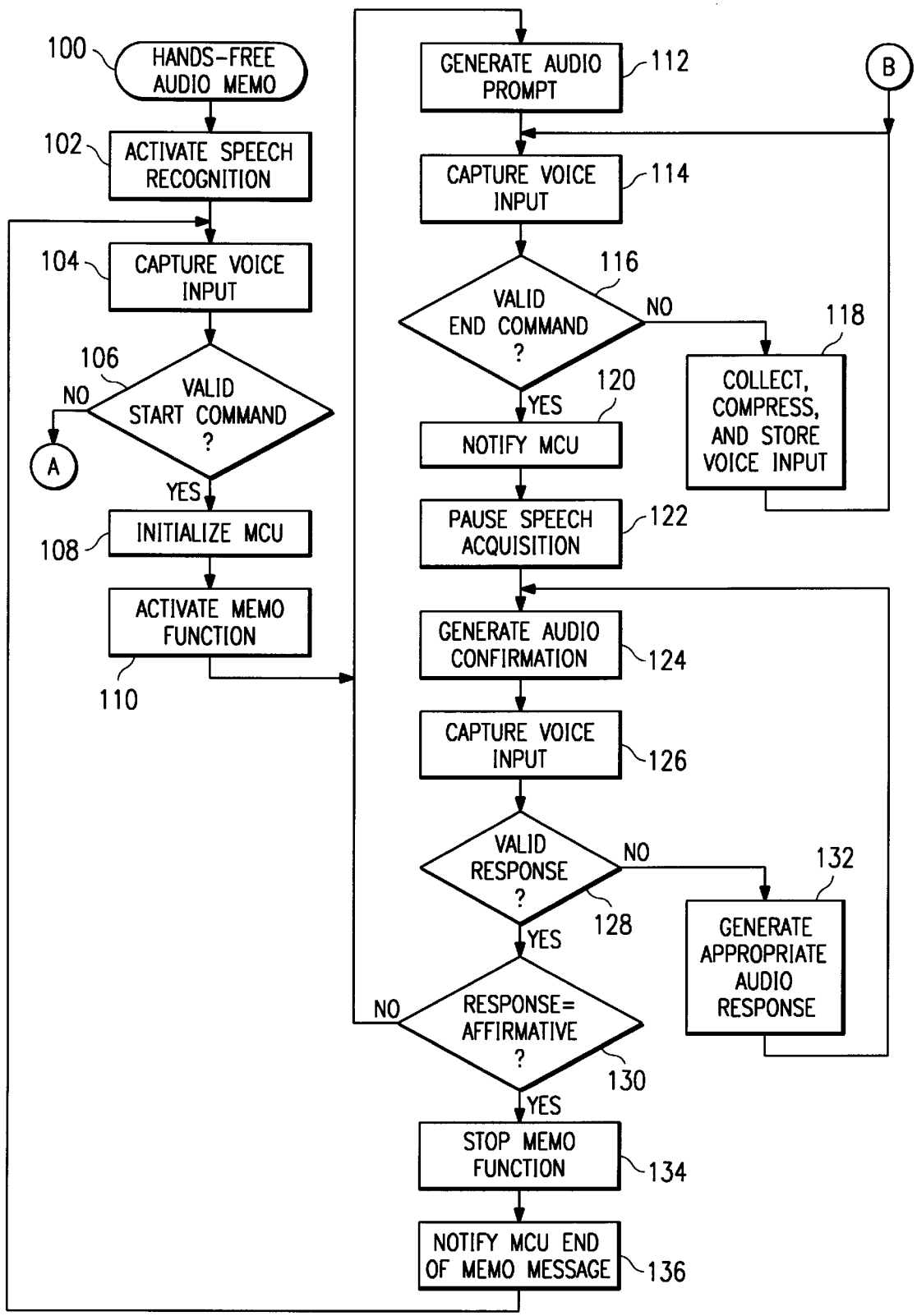
100
HANDS-FREE AUDIO MEMO
102
ACTIVATE SPEECH RECOGNITION
104
CAPTURE VOICE INPUT
106
VALID START COMMAND ?
NO
A
YES
108
INITIALIZE MCU
ACTIVATE MEMO FUNCTION
110
GENERATE AUDIO PROMPT
112
B
CAPTURE VOICE INPUT
114
116
VALID END COMMAND ?
NO
118
COLLECT, COMPRESS, AND STORE VOICE INPUT
YES
120
NOTIFY MCU
PAUSE SPEECH ACQUISITION
122
GENERATE AUDIO CONFIRMATION
124
CAPTURE VOICE INPUT
126
VALID RESPONSE ?
NO
132
128
GENERATE APPROPRIATE AUDIO RESPONSE
YES
NO
RESPONSE= AFFIRMATIVE ?
130
YES
STOP MEMO FUNCTION
134
NOTIFY MCU END OF MEMO MESSAGE
136

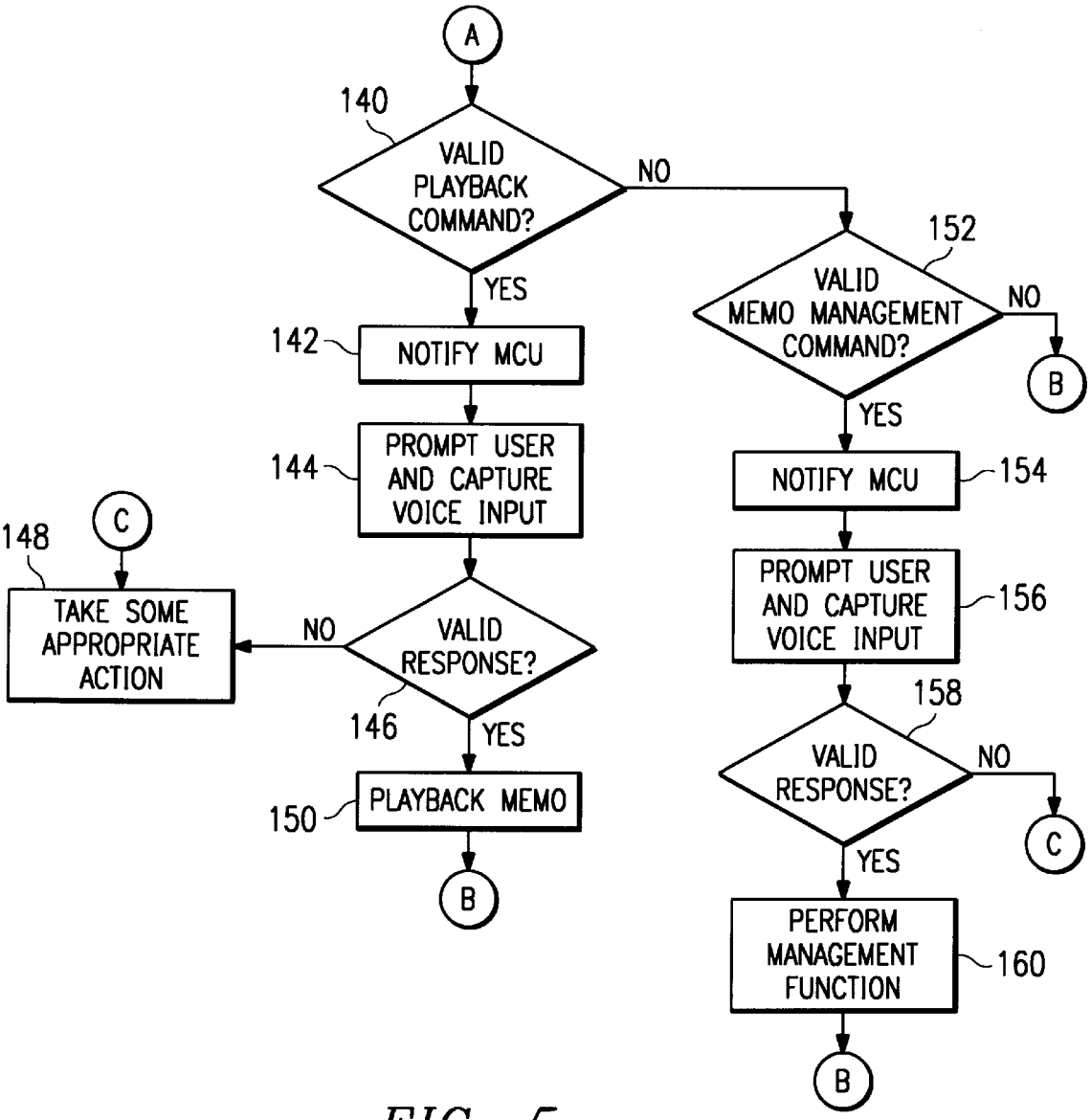
A
140
VALID PLAYBACK COMMAND?
NO
YES
142
NOTIFY MCU
144
PROMPT USER AND CAPTURE VOICE INPUT
VALID RESPONSE?
146
NO
YES
148
C
TAKE SOME APPROPRIATE ACTION
150
PLAYBACK MEMO
B
152
VALID MEMO MANAGEMENT COMMAND?
NO
B
YES
NOTIFY MCU
154
PROMPT USER AND CAPTURE VOICE INPUT
156
158
VALID RESPONSE?
NO
C
YES
PERFORM MANAGEMENT FUNCTION
160
B

FIG. 5

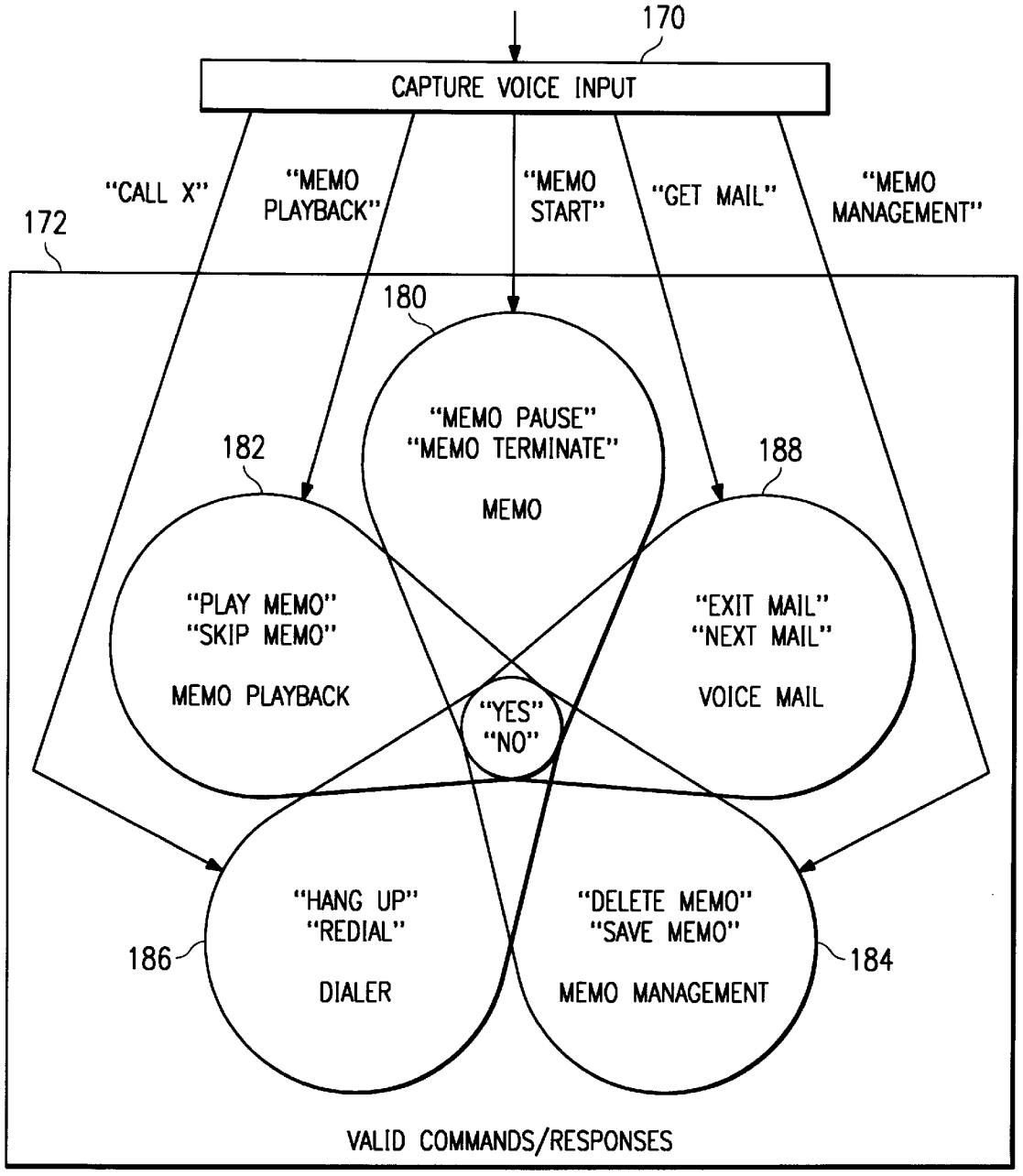
170
CAPTURE VOICE INPUT
"CALL X"
"MEMO PLAYBACK"
"MEMO START"
"GET MAIL"
"MEMO MANAGEMENT"
172
180
"MEMO PAUSE"
"MEMO TERMINATE"
MEMO
182
188
"PLAY MEMO"
"SKIP MEMO"
MEMO PLAYBACK
"EXIT MAIL"
"NEXT MAIL"
VOICE MAIL
"YES"
"NO"
"HANG UP"
"REDIAL"
DIALER
186
"DELETE MEMO"
"SAVE MEMO"
MEMO MANAGEMENT
184
VALID COMMANDS/RESPONSES

FIG. 6

HANDS-FREE AUDIO MEMO SYSTEM AND METHOD

This applications claims benefit to U.S. provisional application Ser. No. 60/032,507 filed Dec. 3, 1996.

TECHNICAL FIELD OF THE INVENTION

This invention is related in general to the field of personal electronic systems. More particularly, the invention is related to a hands-free audio memo system and method for making the same.

BACKGROUND OF THE INVENTION

It is common knowledge that we are currently living in the Information Age. Data come to us in visual, audio, and written forms through a myriad of channels: radio, telecommunications, television, internet, world wide web, and just plain seeing, hearing, and feeling things as events occur around us. There are many instances when it is desirable to retain some of the information in a more reliable manner than the ability or inability to recall data we are born with, for example, that telephone number announced on the radio, the location of that specialty store, or that ingenious idea about a novel gadget to solve a stubborn problem.

The old standby to record data is the pen and paper. However, there are times when it is inconvenient to write, such as when one is operating an automobile, or when pen and paper are not accessible.

Dictaphones, which use audio tape cassettes, and some newer digital recorders, have been used to fill this void. However, they all require the use of at least one hand to hold the device, and to operate the many buttons on the device to turn on the device, record, retrieve, erase, and turn off the device. Further, because it has been shown that the use of one hand to handle a wireless telephone while operating an automobile can lead to unsafe driving and possibly higher incidents of traffic accidents, it is less than desirable to also require the driver to devote the use of one hand to operate the recording device.

SUMMARY OF THE INVENTION

Accordingly, there is a need for an audio memo system and method therefor which enable hands-free operations.

In accordance with the present invention, a hands-free audio memo system and method are provided which eliminate or substantially reduce the disadvantages associated with prior devices.

In one aspect of the invention, an hands-free audio memo system and method uses an interface to receive a voice input from a user, and a speech recognition unit coupled to the interface to monitor the voice input and recognize a predetermined set of voice commands from the voice input. The speech recognition unit generates a command signal that corresponds to the recognized voice command, which is received by a controller unit. The controller unit activates a speech acquisition unit coupled to the controller unit to collect and stop collecting the voice input in response to a control signal generated by the controller unit. A memory is provided to store the collected voice input.

In another aspect of the invention, an hands-free personal memo system includes an analog interface receiving a voice input from a user, a speech recognition unit coupled to the interface adapted for receiving the voice input therefrom, recognize a predetermined set of voice commands from the voice input, and generating a command signal in response thereto. A controller unit is coupled to the speech recognition unit which generates a control signal in response to receiving the command signal from the speech recognition unit. A digital telephone answering device is coupled to the controller unit and analog interface for collecting and storing the voice input.

In yet another aspect of the invention, a method for hands-free audio memo includes the steps of receiving a voice input from a user, recognizing a voice commands in the voice input indicative of the user's desire to record an audio memo, collecting subsequent voice input, and storing the subsequent voice input.

Hands-free audio memo system and method therefor of the present invention provide a way for users to record audio memos and perform other functions without the use of a hand for its operation. This is especially advantageous for persons who are operating an automobile or performing other tasks that require concentration and generally the use of both hands.

BRIEF DESCRIPTION OF THE DRAWINGS

For a better understanding of the present invention, reference may be made to the accompanying drawings, in which:

FIG. **1** is a simplified functional block diagram of an exemplary hands-free audio memo system constructed according to the teachings of the present invention;

FIG. **2** is a simplified block diagram of an alternative embodiment of the hands-free audio memo system of the present invention;

FIG. **3** is an exemplary flowchart of a simplified hands-free audio memo algorithm according to the teachings of the present invention;

FIG. **4** is an exemplary flowchart of an hands-free audio memo algorithm according to the teachings of the present invention;

FIG. **5** is an exemplary flowchart of voice playback and memo management functions of the hands-free audio memo algorithm according to the teachings of the present invention; and

FIG. **6** is an exemplary flowchart showing exemplary voice inputs to the system according to the teachings of the present invention.

DETAILED DESCRIPTION OF THE INVENTION

The preferred embodiment(s) of the present invention is (are) illustrated in FIGS. **1–6**, like reference numerals being used to refer to like and corresponding parts of the various drawings.

Referring to FIG. **1**, a functional block diagram of an exemplary hands-free audio memo system **10** constructed according to the teachings of the present invention is shown. System **10** includes an analog interface **12** which receives voice input of a user captured by a microphone **14**, and converts the analog voice input into a digital voice input signal. Analog interface **12** is further coupled to a speech acquisition unit **16**, which functions to collect the digital voice input signal. The collected digital voice input signal is then provided to a speech recognition unit **18**, which receives the digital voice input signal and searches for a set of predetermined voice commands and responses stored in a speaker-independent speech model memory **19** and/or an optional speaker-dependent speech model memory **21**. For example, the voice command may be "MEMO START" or

"TAKE MEMO" to initiate memo recording, "MEMO TERMINATE" to stop memo recording, and other appropriate responses. Further, certain commands and responses may be only valid during certain times and ignored at other times. For example, when memo recording is taking place, speech recognition unit **16** may only listen for a smaller set of commands and/or responses from the user, such as "MEMO TERMINATE," and not "YES" or "NO."

Speech recognition unit **18** is further coupled to a controller unit or microcontroller unit (MCU) **20**. When speech recognition unit **16** recognizes a valid command or response, it generates a signal to inform controller unit **20** to take appropriate actions. Controller unit **20** is further coupled to a speech compression unit **22**, which is also coupled to speech acquisition unit **16**. Speech compression unit **22** compresses the digital voice input signals collected by speech acquisition unit **16** using known compression algorithms and stores the compressed signals into a memory **24**.

A speech decompression unit **26** and a speech synthesis unit **27** are further coupled between controller unit **20** and analog interface **12**. Controller unit **20** instructs speech compression unit **26** to decompress stored speech in memory **28** and provide to speech synthesis unit **27** to produce a speech prompt or response at appropriate times, which is then broadcast to the user by a speaker **30** coupled to analog interface **12**.

Optionally, a communications link **31** may be provided to download voice input signals stored in memory **24** to a personal computer (not shown). In addition, a dialer **32** and link **34** may be further provided to a personal communications system (not shown) to perform functions related to telecommunications, such as dialing a particular number or "CALL HOME."

FIG. **2** is a simplified block diagram of an embodiment of hands-free audio memo system **50** according to the teachings of the present invention. System **50** includes an analog interface **52** coupled to a speech recognition unit **54** and a digital telephone answering device (DTAD) **56**. DTAD **56** typically includes speech acquisition and compression functions, and a memory. a microcontroller unit **58** is further coupled to speech recognition unit **54** and DTAD **56**.

System **50** may be implemented with commercially available components or devices. For example, interface **52** may be implemented with TCM320AC36 or TCM320AC37 Voice-Band Audio Processors (VBAP)™ manufactured by Texas Instruments Incorporated of Dallas, Tex.; speech recognition unit **54** may be implemented with TMS320C5X Digital Signal Processor (DSP) also manufactured by Texas Instruments Incorporated; DTAD **56** may be implemented with the MSP58C8X product line of Texas Instruments Incorporated; and microcontroller unit **58** may be implemented with TMS370 family products of Texas Instruments Incorporated.

A single chip implementation is also contemplated by the present invention. For example, components in Texas Instrument's cDSP™ product line may be incorporated and formed on a single silicon substrate to construct an integrated circuit. For example, a C54X core for performing the speech recognition and DTAD functions, an Advanced RISC (reduced instruction set computing) Machines (ARM™) 7TDMI core for performing the controller unit functions, and a Voice-Band Audio Processor core for performing analog interface functions may be combined into a single integrated circuit. It may be seen that the above are merely examples and other suitable substitutes may be used.

Referring to FIG. **3** as well as the block diagrams in FIGS. **1** and **2**, an exemplary process flow **70** for hands-free audio memo systems **10** and **50** is provided. Speech acquisition **16** or DTAD **56** and recognition **16** or **54** is first activated in step **72**. The activation may be done at the time the automobile (not shown) is started, by the push of a button, or by leaving the key in the accessory position, for example. In steps **72** and **74**, speech recognition unit **18** or **54** searches for a valid command appropriate for the occasion, such as "MEMO START" to start the memo recording process. Once a valid command is recognized, as determined in step **76**, controller unit **20** or **58** is notified, such as by a signal generated by speech recognition unit **18** or **54**, as shown in step **78**. Controller unit **20** or **58** then activates the memo function, as shown in step **80**. Once the system is ready, an optional audio prompt or speech (e.g., "MEMO SYSTEM READY") may be generated in step **82** to signal to the user that he/she may begin to speak. A timer or counter (not shown) set for a predetermined time period may be started when speech acquisition **16** begins to capture voice input in step **84**. The collected voice input is converted to digital signals, compressed and stored in memory **24**, as shown in step **86**. When the timer expires, speech acquisition is stopped, as shown in step **88**. Controller unit **20** or **58** is then notified that memo recording terminated, as shown in step **90**, and execution returns to step **74** to be ready for the next memo.

A second version of the method for hands-free audio memo **100** is shown in FIG. **4**. Speech acquisition **16** or DTAD **56** and speech recognition **18** or **54** are activated either by starting the automobile, leaving the key in the accessory position, or the push of a button (not shown), for example, as shown in step **102**. Speech recognition **18** or **54** monitors the speech uttered by the user(s) in the vicinity and searches for recognizable valid voice commands and/or responses, such as a command to start the memo process, as shown in step **104**.

When it is determined that the captured voice input is a valid command, such as "MEMO START," controller unit **20** or **58** is notified, as shown in steps **106** and **108**. Controller unit **20** or **58** in turn activates the memo function, as shown in step **110**. In step **112**, an audio prompt or speech (e.g., "MEMO SYSTEM READY") may be generated to signal to the user that he/she may begin to speak. The user's speech is then captured and compared with recognizable commands appropriate for the circumstances, such as "MEMO TERMINATE" to end the process, as shown in steps **114** and **116**. Speech recognition **18** or **54** may be running in a low resource mode at this time to look for only those commands that are valid during this time, such as only the command to terminate or pause the memo taking process. If the captured utterance is not a recognizable and valid command, then it is collected, compressed, and stored, as shown in step **118**. If in step **116**, it is determined that the captured speech is a recognizable and valid command to end the memo process, for example, then controller unit **20** or **58** is notified, as shown in block **120**. Controller unit **20** or **58** then pauses speech acquisition, as shown in step **122**, and instructs speech decompression **26** and speech synthesis **27** to issue an audible prompt for confirmation, such as "READY TO TERMINATE MEMO?" The subsequent voice input is then captured and monitored for a valid response to the prompt, such as "YES" or "NO," as shown in steps **126** and **128**. If the received voice input is not a recognizable valid response to the confirmation, then an appropriate audio response may be generated to reconfirm, as shown in step **132**. If the voice input is recognized as a response indicative that the user is not ready to terminate the memo process, then execution returns to step **112**, to continue to record memo. If on the other hand the voice input is recognized as an affirmative response in step **130**, then the memo function is stopped in step **134**, and controller unit **20** or **58** is notified in step **136**. Execution then returns to step **104** to prepare for the next memo.

FIG. **5** is a flowchart of memo playback and memo management functions of system **10** and **50**. At step **76**

shown in FIG. **3** or step **106** shown in FIG. **4**, if the voice input is not a valid start command, it is also checked for whether it is a valid playback command, as shown in step **140**. If it is, controller unit **58** is notified in step **142** and the user is prompted for additional input, which is captured, as shown in step **144**. The captured speech input is then examined to determined whether it is a valid response to the prompt given in step **144**, if not, some appropriate action is taken in step **148**, such as issue an appropriate audio statement. If it is a valid response, then the memo playback function **150** is launched, where the user may play back one or more previously recorded memos, skip one or more memos, etc. At the end of the memo playback function, the algorithm may return to step **74** in FIG. **3** or step **114** shown in FIG. **4**.

If in step **140** it is determined that the speech input is not a valid playback command, then a determination is made as to whether it is a valid memo management command in step **152**. If not, then the process may return to step **74** in FIG. **3** or step **114** shown in FIG. **4** to continue to capture the speech input. Otherwise, controller unit **58** is notified in step **154** and the user is prompted for additional input, which is captured, as shown in step **156**. The captured speech input is then examined to determined whether it is a valid response to the prompt given in step **158**, if not, some appropriate action is taken in step **148**, such as issue an audio statement. If it is a valid response, then the memo management function **160** is launched, where the user may perform operations such as delete, save, and protect on previously recorded memos. At the end of the memo management function, the algorithm may return to step **74** in FIG. **3** or step **114** shown in FIG. **4**.

Referring to FIG. **6**, a more detailed process flow is shown. As voice input is captured in step **170**, it is determined whether it matched any recognizable and valid command and response in step **172**. For example, one or more recognized key phrases may be used to initiate system **50** in a memo recording mode **180**, memo playback mode **182**, memo management mode **184**, dialer mode **186**, and voice mail mode **188**, where each mode is shown with exemplary valid phrases recognized when system **50** is in the respective modes. The key phrases to launch each mode may include "MEMO START" to launch the memo recording functions; "MEMO PLAYBACK" to launch the memo playback functions; "MEMO MANAGEMENT" to launch the memo management functions; "CALL X" to launch the dialer functions; and "GET MAIL" to launch the voice mail functions. Thus, speech recognition unit **54** need only to focus on a subset of possible valid utterances as to speed up search and processing time and to conserve resources.

Although the present invention and its advantages have been described in detail, it should be understood that various changes, substitutions and alterations can be made therein without departing from the spirit and scope of the invention as defined by the appended claims.

What is claimed is:

1. A method for hands-free audio memo, comprising the steps of:

receiving a voice input from a user;

recognizing a memo start voice command in the voice input indicative of the user's desire to record an audio memo;

collecting subsequent voice input;

storing the subsequent voice input;

recognizing a memo management voice command in the voice input indicative of the user's desire to manage stored voice input; and

performing management functions in response to further voice input.

2. The method, as set forth in claim **1**, wherein:

said memo management voice command includes a delete memo voice command; and

said method further comprises deleting a current memo in response to a delete memo voice command.

3. The method, as set forth in claim **1**, wherein:

said memo management voice command includes a save memo voice command; and

said method further comprises saving a current memo in response to a save memo voice command.

4. The method, as set forth in claim **1**, wherein:

said memo management voice command includes a protect memo voice command; and

said method further comprises protecting a current memo in response to a protect memo voice command.

5. A method for hands-free audio memo, comprising the steps of:

receiving a voice input from a user;

recognizing a memo start voice command in the voice input indicative of the user's desire to record an audio memo;

collecting subsequent voice input;

storing the subsequent voice input;

storing a speech model of digital voice signal inputs corresponding to each of a plurality of voice commands;

recognizing a voice command in the voice input indicative of a specific function by determining if said voice input matches any speech model corresponding to one of said specific functions; and

following recognition of a voice command indicative of a specific function recognizing subsequent voice commands by attempting to match subsequent voice input to a subset of speech models of digital voice signals corresponding to valid commands following said specific function.

6. The method, as set forth in claim **5**, wherein:

said step of recognizing a voice command in the voice input indicative of a specific function includes attempting to match voice input to a first subset of said speech models.

7. The method as set forth in claim **6**, wherein:

said first subset of said speech models includes a speech model for each of the voice commands "CALL X", "MEMO PLAYBACK", "MEMO START", "GET MAIL" AND "MEMO MANAGEMENT";

said subset of speech models corresponding to "CALL X" includes the voice commands "HANG UP", "REDIAL", "YES" and "NO";

said subset of speech models corresponding to "MEMO PLAYBACK" includes the voice commands "PLAY MEMO", "SKIP MEMO", "YES" and "NO";

said subset of speech models corresponding to "MEMO START" includes the voice commands "MEMO PAUSE", "MEMO TERMINATE", "YES" and "NO";

said subset of speech models corresponding to "GET MAIL" includes the voice commands "EXIT MAIL", "NEXT MAIL", "YES" and "NO"; and

said subset of speech models corresponding to "MEMO MANAGEMENT" includes the voice commands "DELETE MEMO", "SAVE MEMO", "YES" and "NO".

* * * * *