US006929365B2

(12) **United States Patent**
Swab et al.

(10) **Patent No.: US 6,929,365 B2**
(45) **Date of Patent: Aug. 16, 2005**

(54) **EYEWEAR WITH EXCHANGEABLE TEMPLES HOUSING BLUETOOTH ENABLE APPARATUS**

(75) Inventors: **Gregory Swab**, Tulsa, OK (US); **James E. Malackowski**, Chicago, IL (US); **Mikal Greaves**, Mountain View, CA (US); **Rolf Milesi**, Sunnyvale, CA (US); **Christne Ligtenberg**, San Carlos, CA (US); **Thomas Meier**, San Jose, CA (US)

(73) Assignee: **Q.R. Spex, Inc.**, Tulsa, OK (US)

(*) Notice: Subject to any disclaimer, the term of this patent is extended or adjusted under 35 U.S.C. 154(b) by 84 days.

(21) Appl. No.: **10/611,125**

(22) Filed: **Jul. 1, 2003**

(65) **Prior Publication Data**

US 2004/0029582 A1 Feb. 12, 2004

Related U.S. Application Data

(62) Division of application No. 09/845,425, filed on Apr. 30, 2001, now Pat. No. 6,769,767.

(51) **Int. Cl.**[7] **G02C 3/00**

(52) **U.S. Cl.** **351/153**; 351/158; 16/228

(58) **Field of Search** 351/158, 41, 153; 704/271, 270; 455/343, 344, 347, 351; 381/381, 370, 375; 16/228

(56) **References Cited**

U.S. PATENT DOCUMENTS

4,294,792 A		10/1981	Arons et al.	
5,717,479 A		2/1998	Richards	
6,091,832 A	*	7/2000	Shurman et al.	381/381
6,311,155 B1		10/2001	Vaudrey et al.	
6,629,076 B1	*	9/2003	Haken	704/271

OTHER PUBLICATIONS

German Search Report dated Aug. 19, 2004.

* cited by examiner

Primary Examiner—Hung Xuan Dang
(74) *Attorney, Agent, or Firm*—Joel Lutzker; Reine H. Glanz; Schulte Roth & Zabel

(57) **ABSTRACT**

A wireless ad hoc pico network is formed by eyewear and other devices such as a computer, a bracelet and a telephone having similar transceivers mounted on them. Master slave relationships are configurable. Other devices, such as a radio, a CD player, a hand held global positioning satellite system and a heart rate monitor, having similar transceivers, can also be connected with the transceiver of the eyewear. The transceivers operate on globally available, unlicensed radio band, 2.45 gigahertz (GHz) and conforms to the Bluetooth standard. The power consumption of Bluetooth enabled devices is less than three percent of the power consumption of a mobile phone. The eyewear includes a frame and connected to the frame are two temples. Temples are connected to frame via hinges. Temples have a male portion of a connector incorporated in them. Female portion of the connector is made integral with the hinges. When the male portion is inserted in the female portion the temple is attached to the frame. The temples can be removed by pulling the connector apart, and a temple with different apparatus within it can be inserted in place of the removed temples. The temple may have co-molded within its body, an apparatus such as an audio device, a camera, a speaker, and a microphone, and a display device such as liquid crystal or an alarm. In another embodiment, eyewear constitutes a distance alarm to monitor the movement of, for example, a child. A device in form of, for example, a bracelet is worn by the child. The transceivers in the eyewear and the bracelet form a small-range wireless network, i.e., piconet, wherein the eyewear and the bracelet communicate using signals conforming to the Bluetooth technology. The transceiver in the eyewear is configured to generate an alarm when the bracelet exceeds a predetermined distance from eyewear.

6 Claims, 15 Drawing Sheets

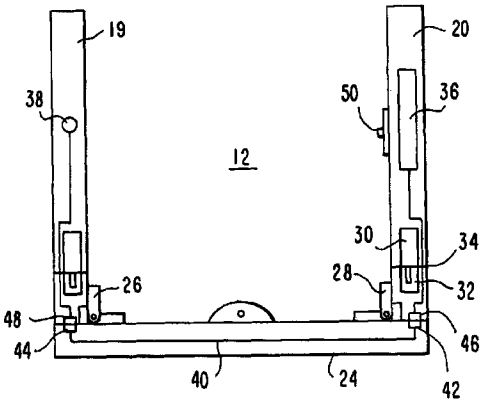

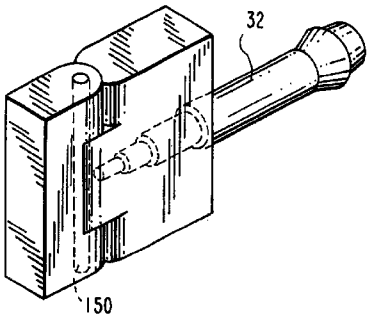

Luxottica Ex. 1015
IPR Petition USP 10,598,960

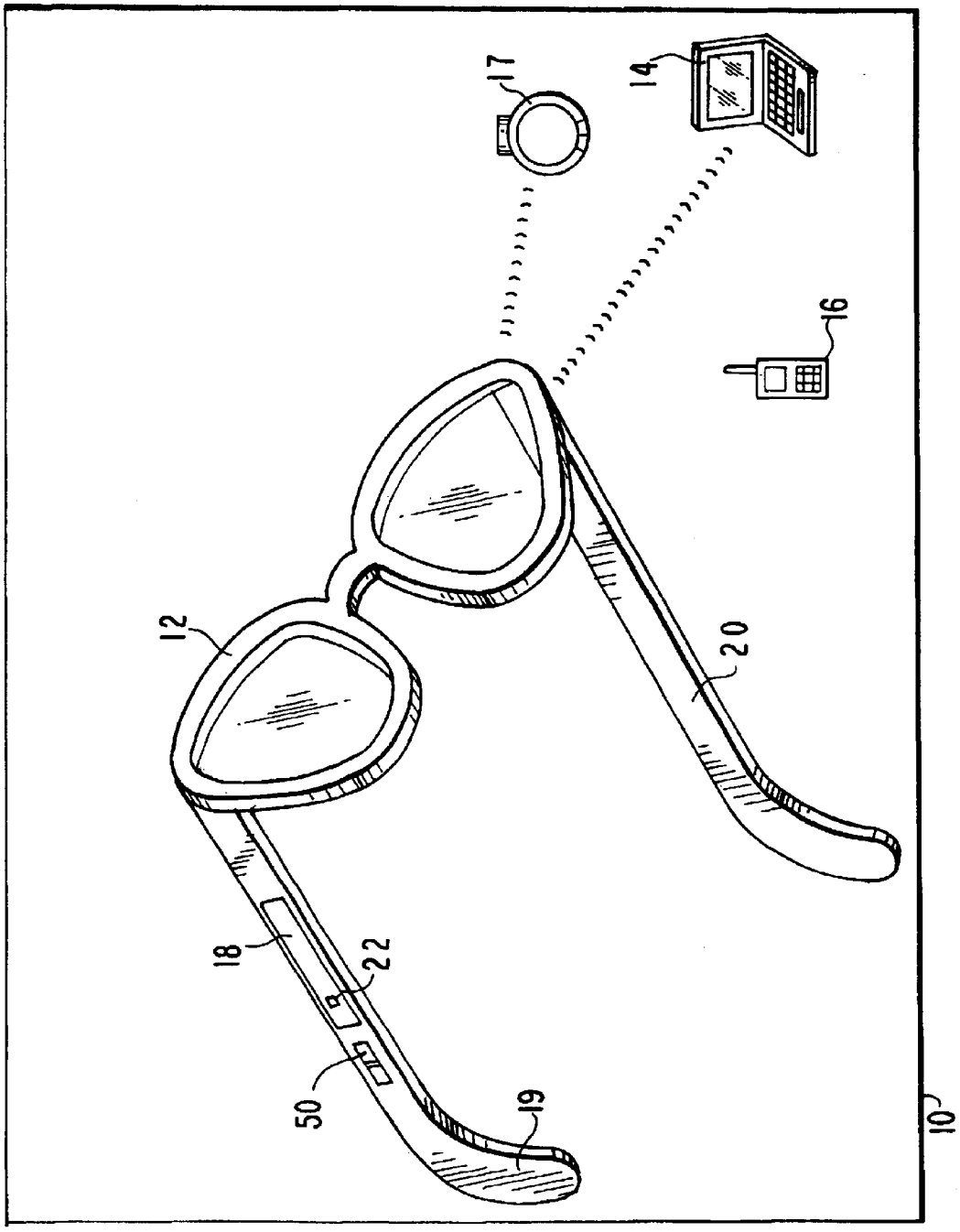

FIG. 1

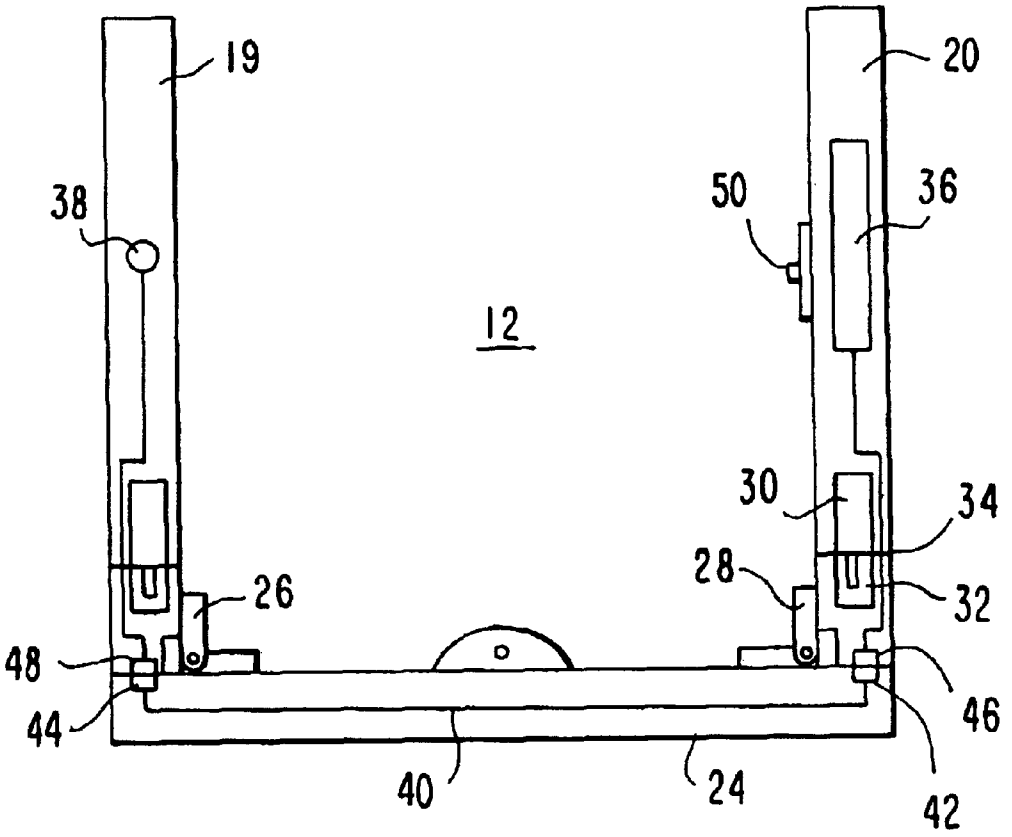

FIG. 2a

FIG. 2b

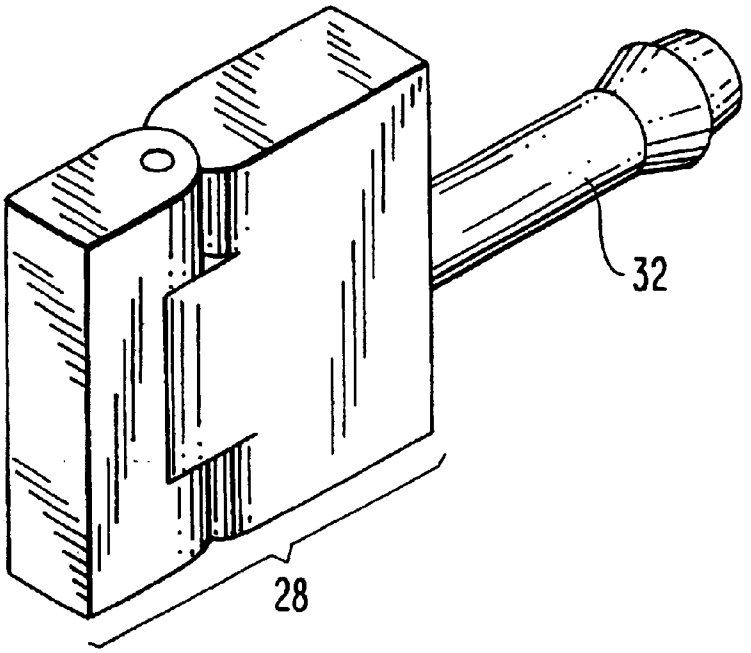

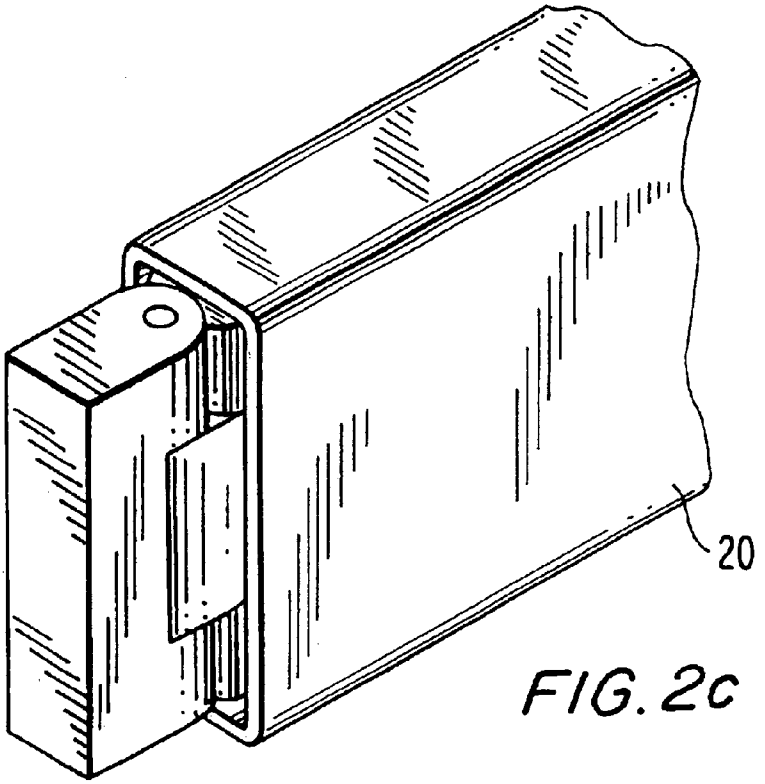

FIG. 2c

FIG. 2d

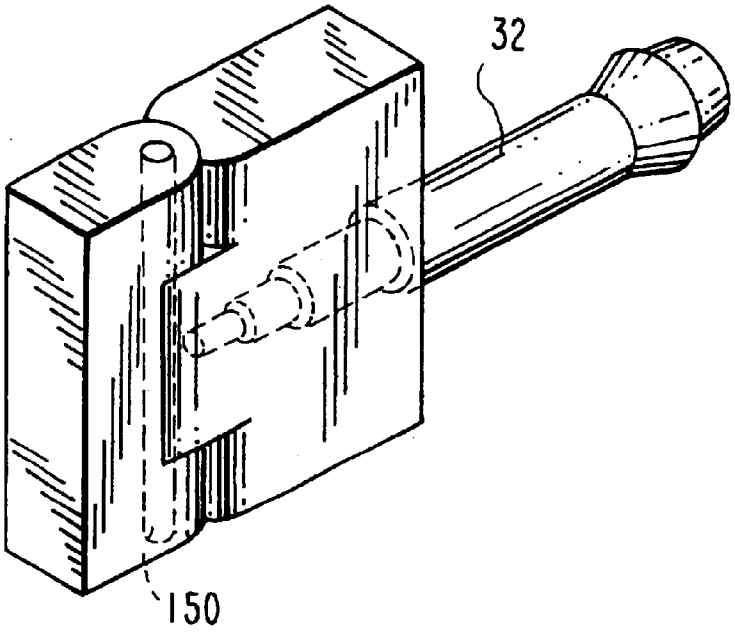

FIG. 2e

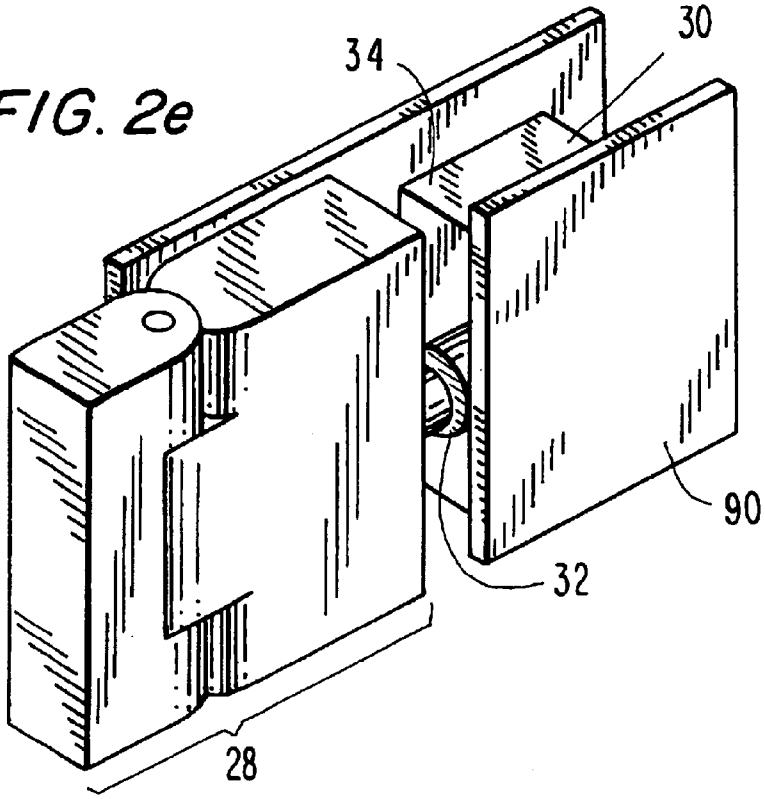

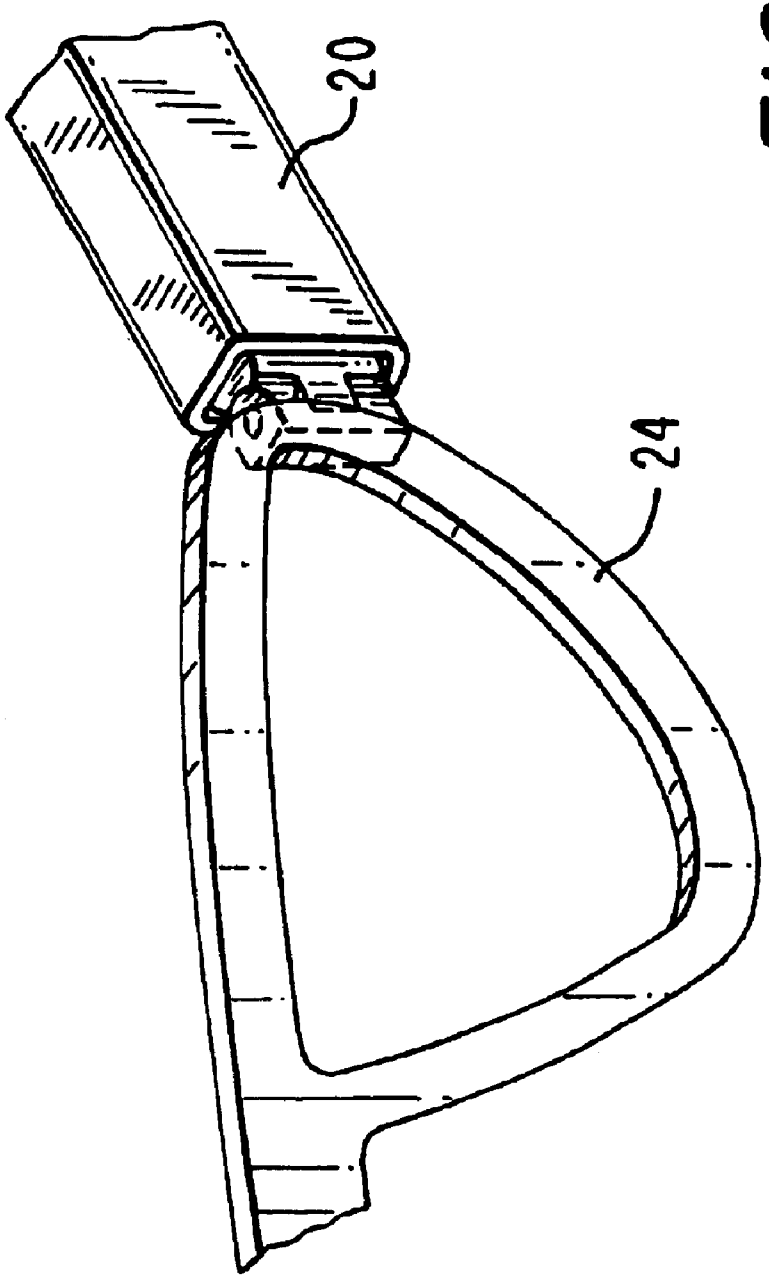

FIG. 2f

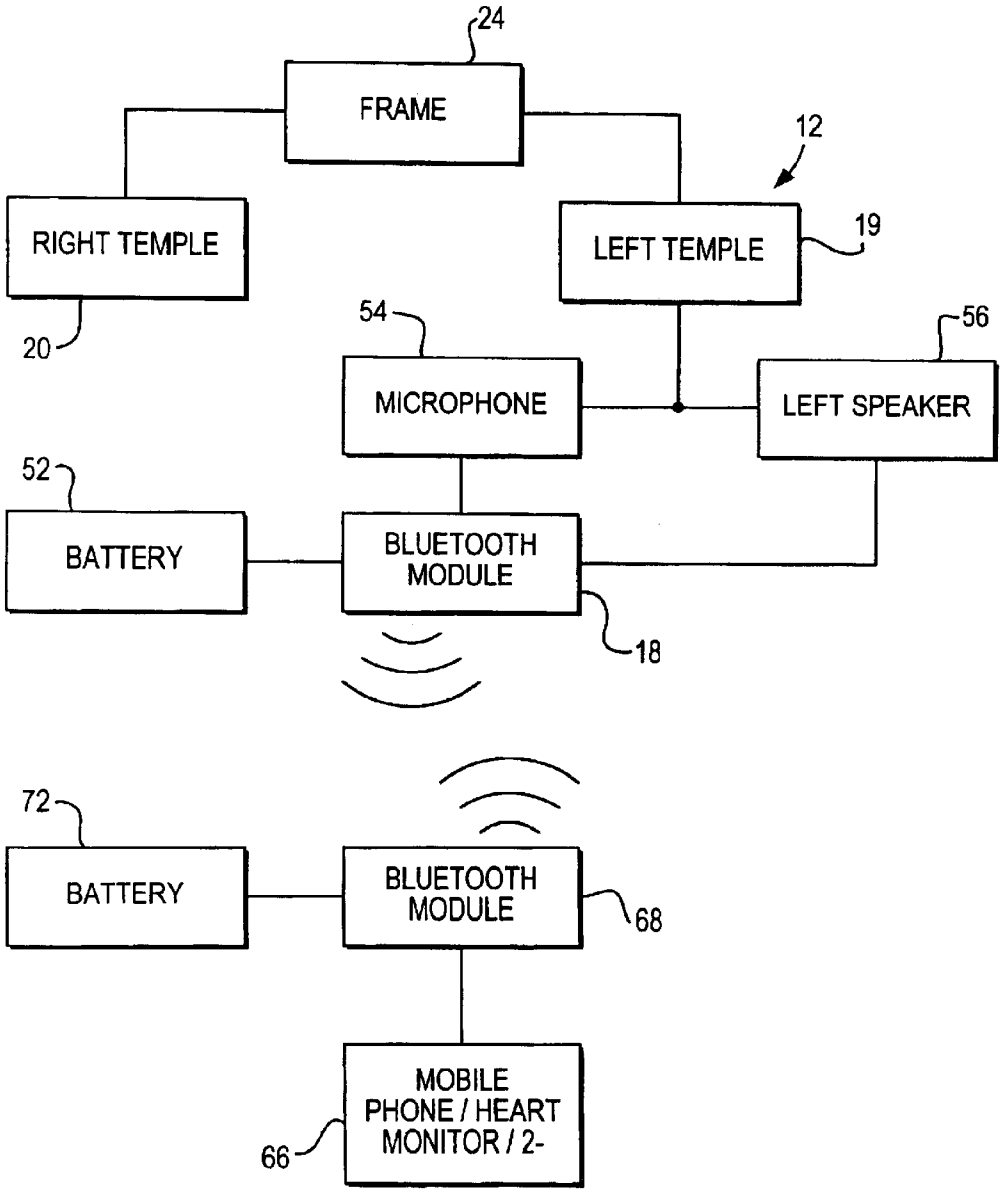
24
FRAME
12
RIGHT TEMPLE
LEFT TEMPLE
19
20
54
56
MICROPHONE
LEFT SPEAKER
52
BATTERY
BLUETOOTH MODULE
18
72
BATTERY
BLUETOOTH MODULE
68
MOBILE PHONE / HEART MONITOR / 2-
66

FIG. 3

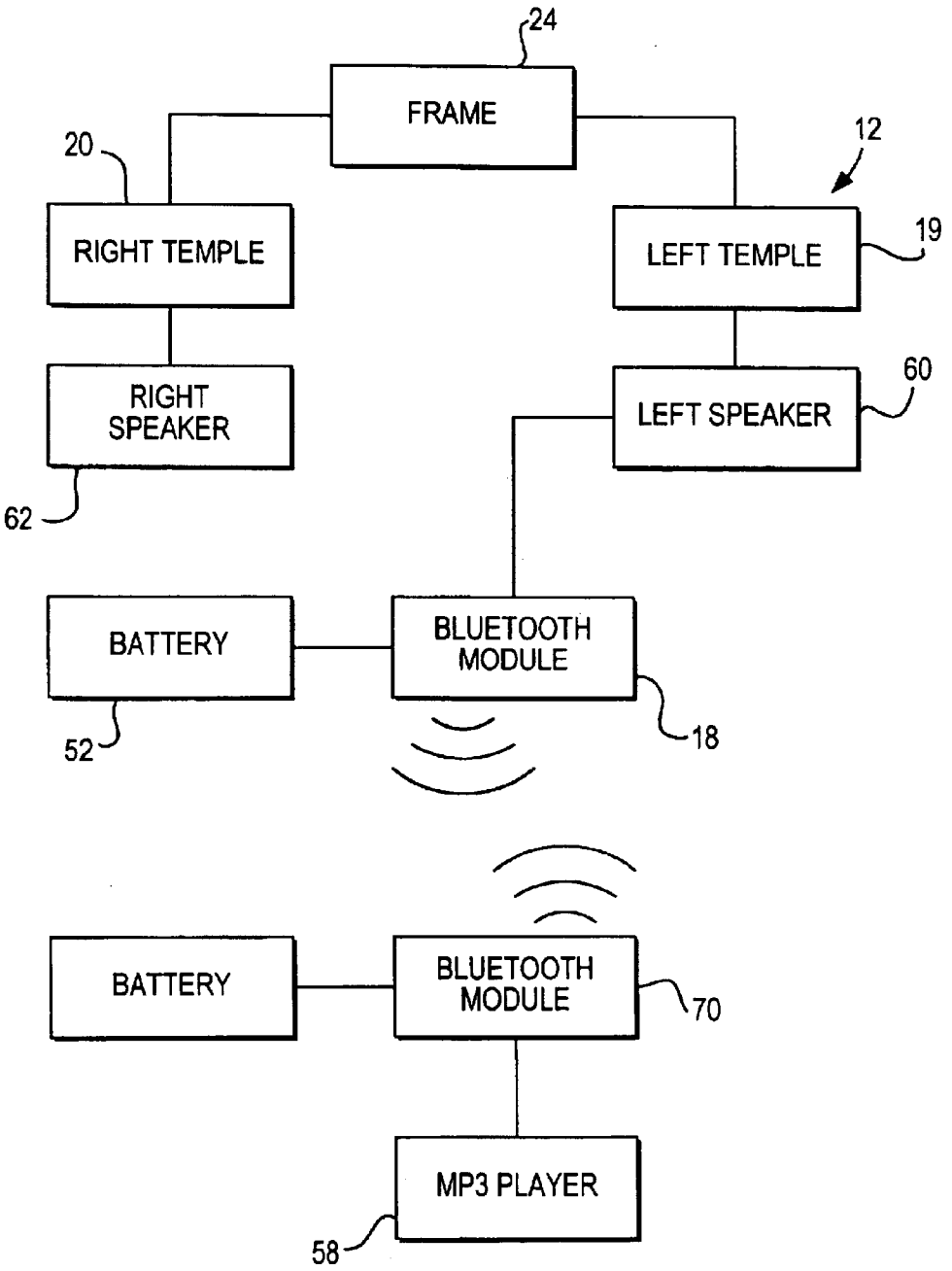
24
FRAME
20
12
RIGHT TEMPLE
LEFT TEMPLE
19
RIGHT SPEAKER
LEFT SPEAKER
60
62
BATTERY
BLUETOOTH MODULE
52
18
BATTERY
BLUETOOTH MODULE
70
MP3 PLAYER
58

FIG. 4

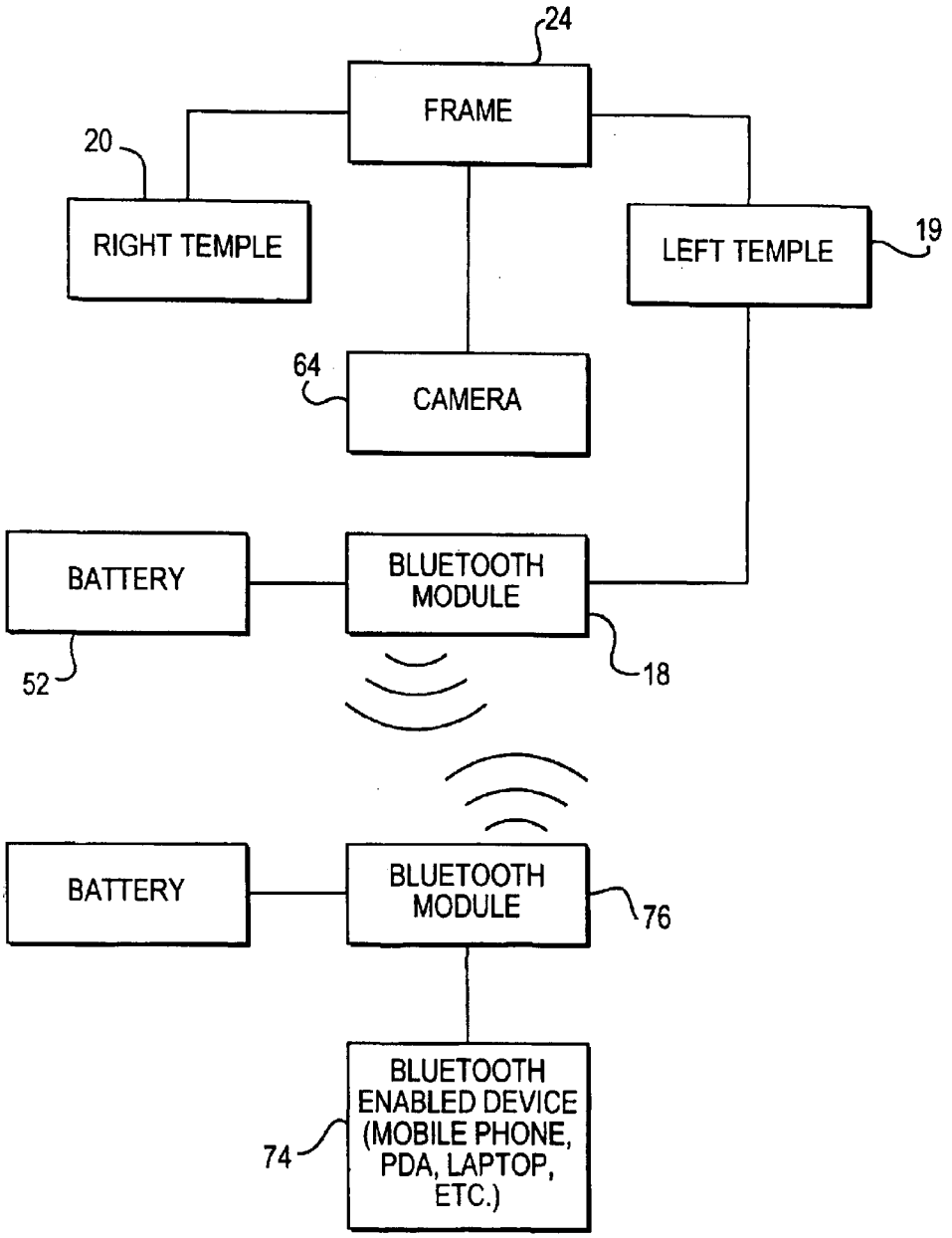
24
FRAME
20
RIGHT TEMPLE
LEFT TEMPLE
19
64
CAMERA
BATTERY
BLUETOOTH MODULE
52
18
BATTERY
BLUETOOTH MODULE
76
BLUETOOTH ENABLED DEVICE (MOBILE PHONE, PDA, LAPTOP, ETC.)
74

FIG. 5

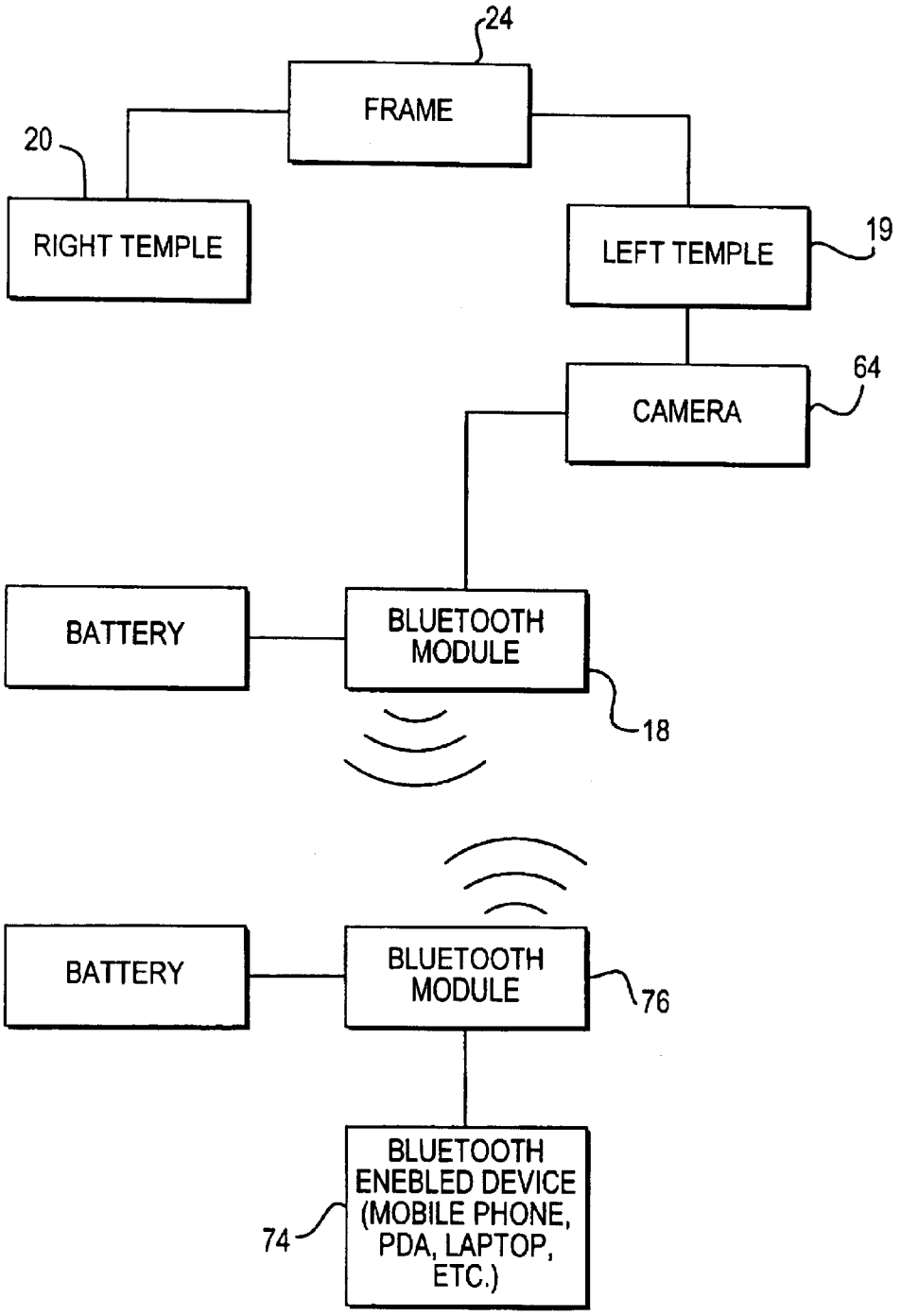
24
FRAME
20
RIGHT TEMPLE
LEFT TEMPLE
19
64
CAMERA
BATTERY
BLUETOOTH MODULE
18
BATTERY
BLUETOOTH MODULE
76
BLUETOOTH ENEBLED DEVICE (MOBILE PHONE, PDA, LAPTOP, ETC.)
74

FIG. 6

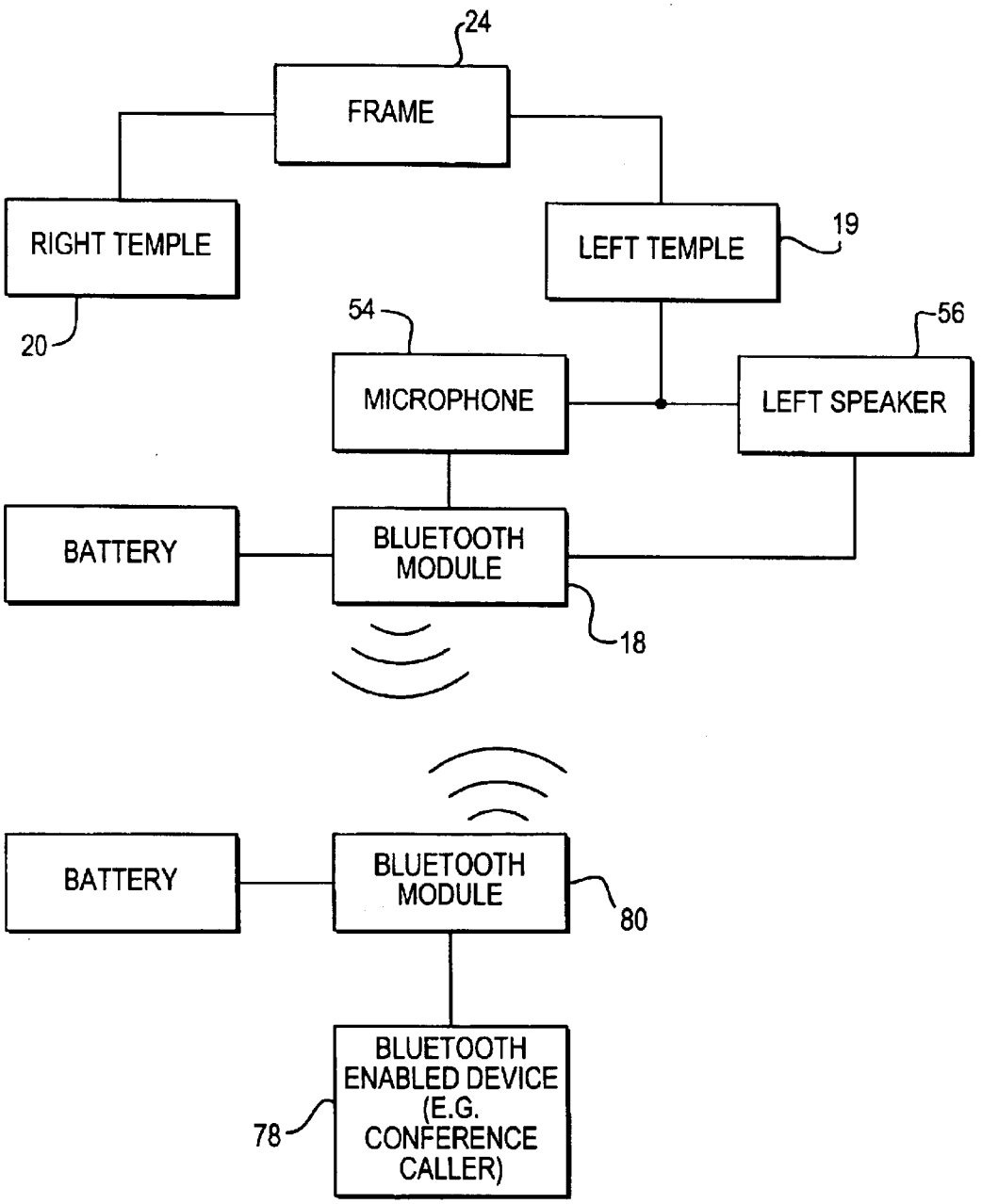
24
FRAME
RIGHT TEMPLE
LEFT TEMPLE
19
20
54
56
MICROPHONE
LEFT SPEAKER
BATTERY
BLUETOOTH MODULE
18
BATTERY
BLUETOOTH MODULE
80
BLUETOOTH ENABLED DEVICE (E.G. CONFERENCE CALLER)
78

FIG. 7

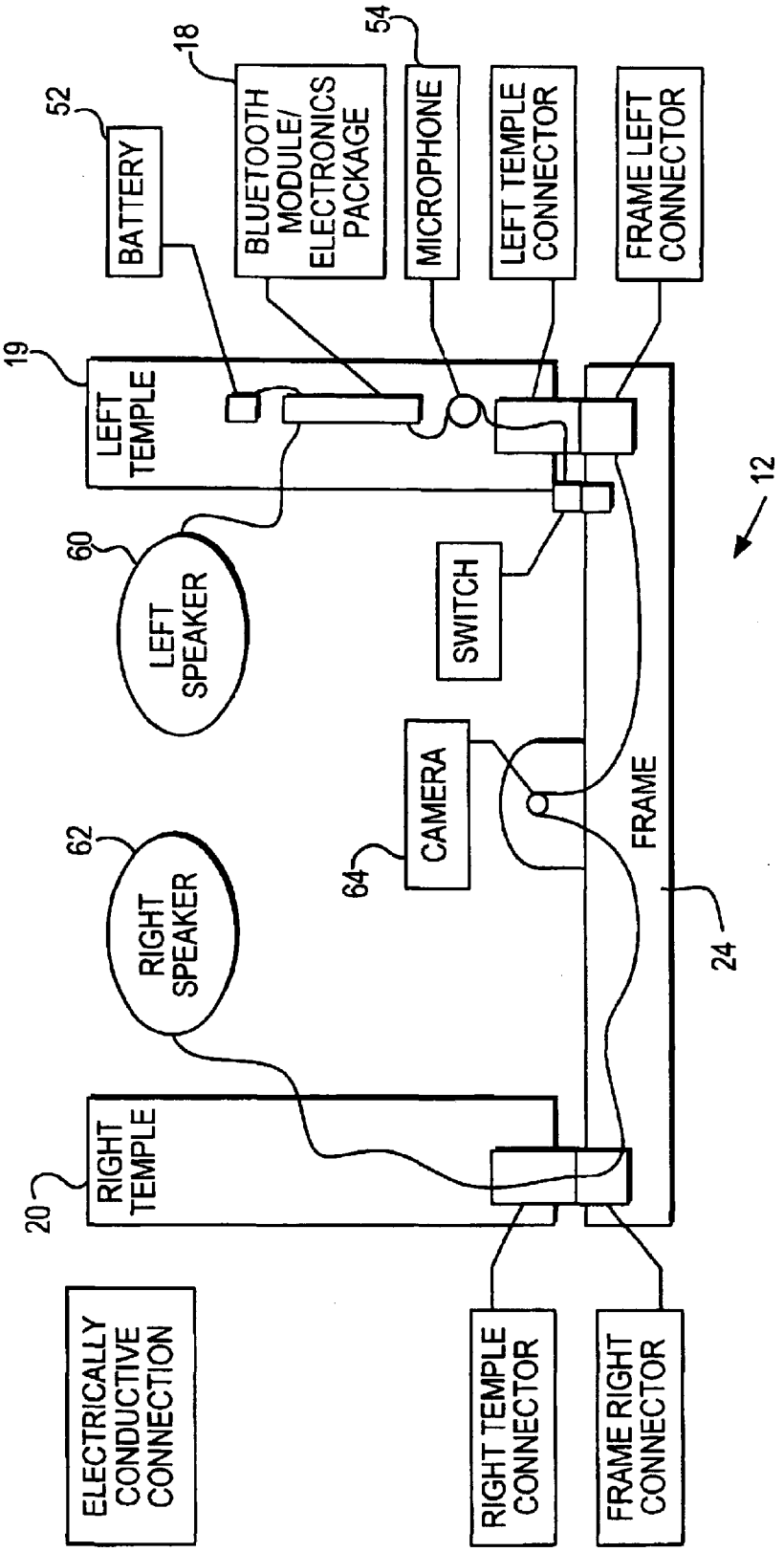
52
BATTERY
18
BLUETOOTH MODULE/ ELECTRONICS PACKAGE
54
MICROPHONE
LEFT TEMPLE CONNECTOR
FRAME LEFT CONNECTOR
19
LEFT TEMPLE
60
LEFT SPEAKER
SWITCH
12
CAMERA
64
FRAME
62
RIGHT SPEAKER
24
20
RIGHT TEMPLE
ELECTRICALLY CONDUCTIVE CONNECTION
RIGHT TEMPLE CONNECTOR
FRAME RIGHT CONNECTOR

FIG. 8

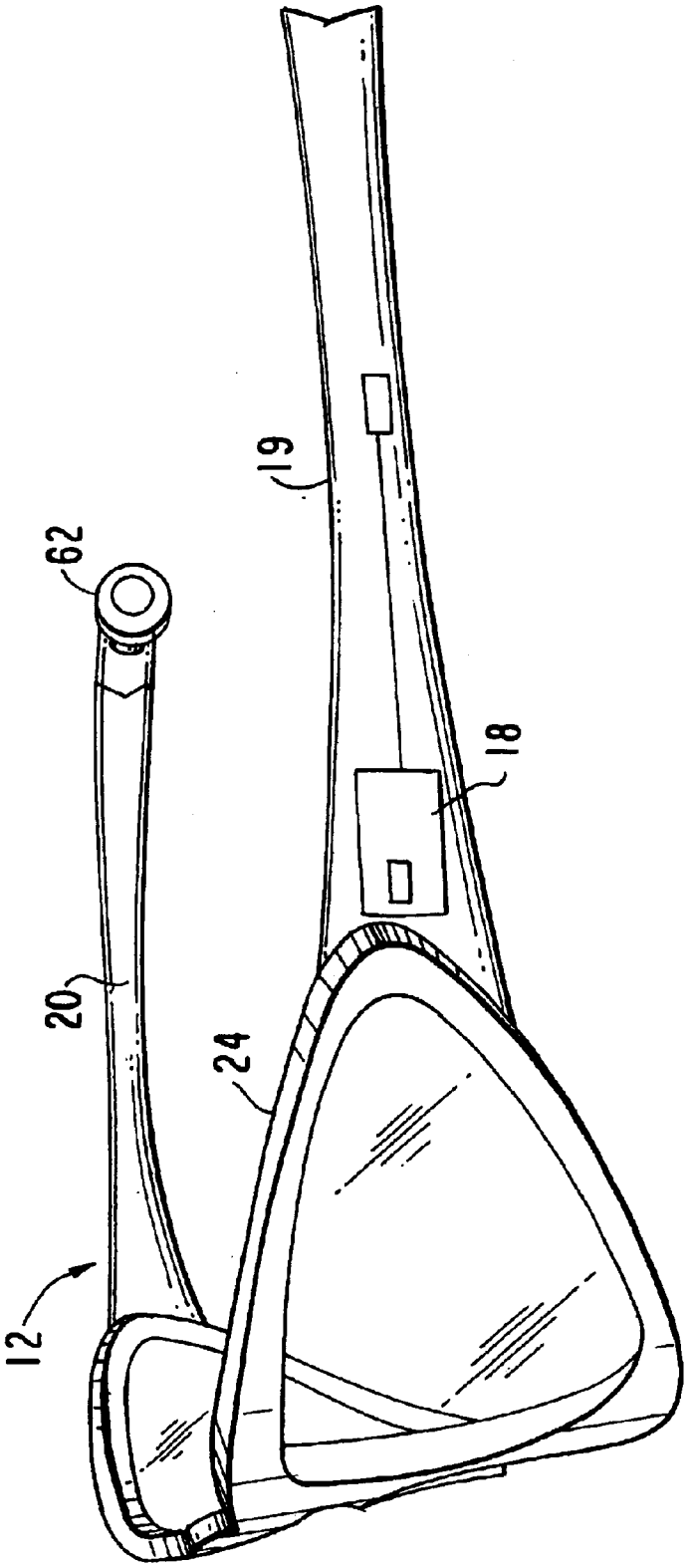

FIG. 9

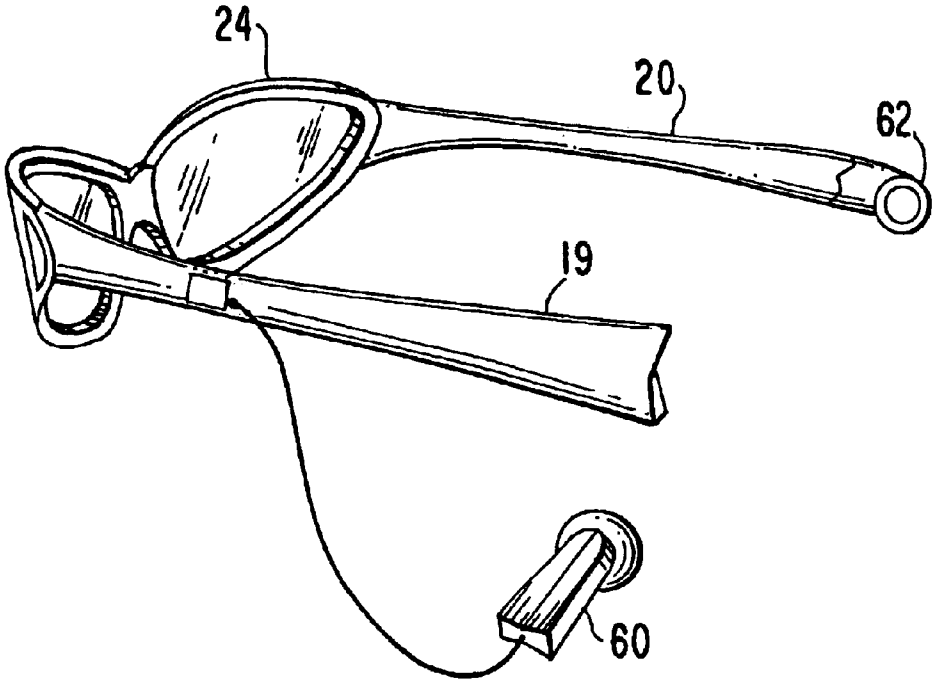

FIG.10

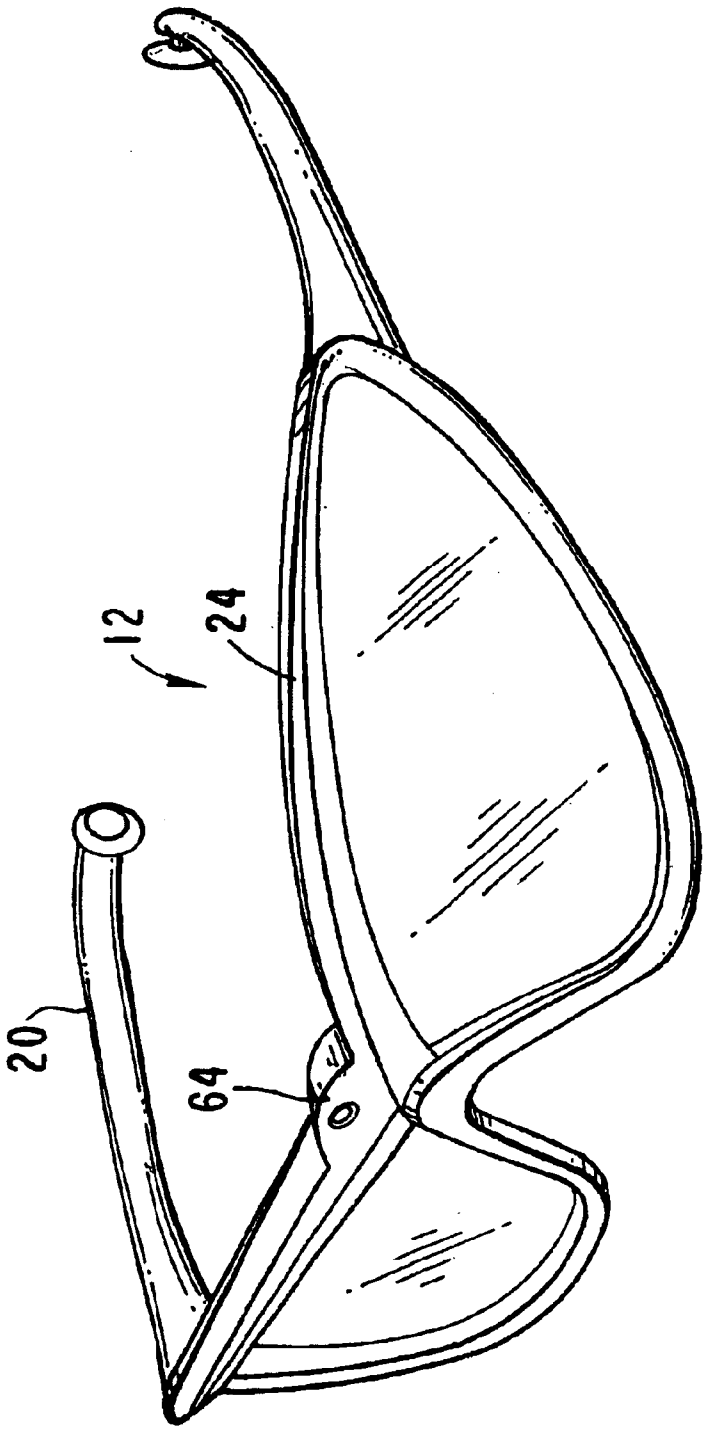

FIG. 11

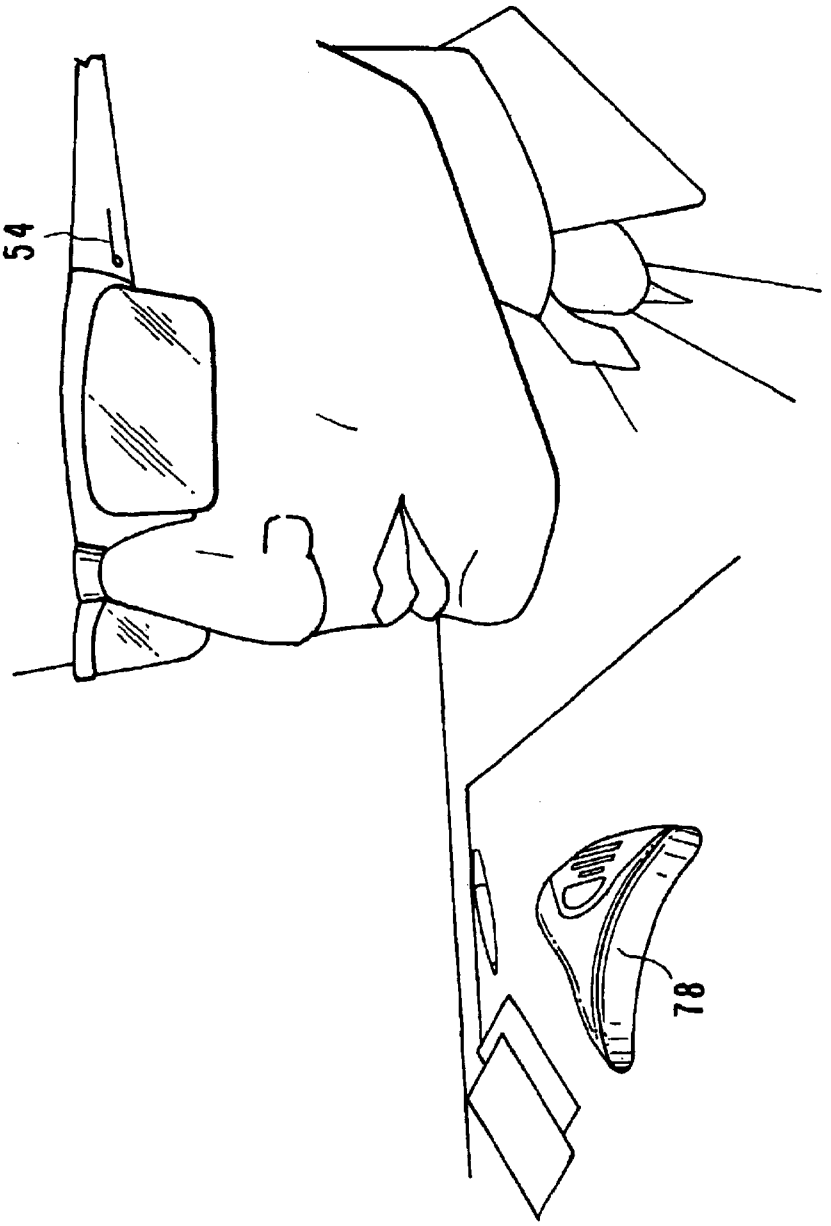

FIG. 12

EYEWEAR WITH EXCHANGEABLE TEMPLES HOUSING BLUETOOTH ENABLE APPARATUS

CROSS-REFERENCE TO RELATED APPLICATIONS

This application is a divisional application of U.S. patent application Ser. No. 09/845,425 filed Apr. 30, 2001, now U.S. Pat. No. 6,769,767 and claims all rights of priority thereto.

BACKGROUND OF THE INVENTION

1. Field of the Invention

The present invention relates to a wireless communication eyewear device having interchangeable temples. More particularly, the invention relates to eyewear having a transceiver enabled with small-range wireless communication technology.

2. Description of the Related Art

Many conventional wearable personal apparatus including eyewear, having electrical input-output devices are available to the consumers. Several of these apparatus provide wireless communications using radio frequency or infrared frequency. For example, U.S. Pat. No. 6,091,832 discloses a wearable personal apparatus that includes an audio transducer, which may function as an audio input or output device. The audio input or output signals are provided through a wireless system.

U.S. Pat. No. 6,091,546 discloses an eyeglass interface system which includes a display assembly and one or more audio and/or video assemblies mounted to an eyeglass frame. The display assembly is mounted to one temple and provides an image to be viewed by the user. The audio or video assembly is mounted on the other temple and is in communication with the display assembly. The audio or video assembly may comprise a camera assembly and/or an audio input or output assembly, such as microphone and/or speakers. Applications include hands-free telephone, hands-free pager, hands-free time display, hands-free blood pressure or vital sign monitoring device, hands-free voice conferencing or hands-free surveillance system. The applications can include voice recognition technology and/or GPS technology utilizing an infrared link or radio frequency (RF) link, or a fiber optic cable.

Additionally, a personal display device built into a frame of eyewear is disclosed at the website of inViso Inc. and may be found at the following URL address: http://www.inviso.com. The inViso's eyewear is designed in the shape of sunglasses with the built-in personal display device providing a wearer with a view of his/her computer screen. The displayed view is equivalent to a view provided by a 19-inch desktop monitor from a 2.5 feet distance. In order to display the content of the computer screen on the personal display device, however, the inViso's eyewear has to be plugged into the computer.

SUMMARY OF THE INVENTION

Conventional apparatuses are limited to handling a one to one communication, and can not form an ad hoc network consisting of more than two devices. Conventional audio devices do not function well in a noisy, radio environment and are bulky and have high power consumption. Therefore, it is desirable to provide a wireless communication device that is capable of forming an ad hoc network with a plurality of devices. It is also desirable to provide an apparatus that

is low-cost, small in size, and has a low power consumption. It is also desirable to have an apparatus that can function in very noisy radio environments and is audible under severe conditions.

The present invention overcomes the shortcomings of the conventional apparatus, and provides a wireless network formed by connecting an eyewear with a computer, a bracelet and a telephone. The eyewear has a transceiver mounted on a temple. The computer, the bracelet and the telephone also have similar transceivers, mounted on them. Other devices, such as a radio, a CD player, a hand held global positioning satellite system and a heart rate monitor, having similar transceivers, can also be connected with the transceiver. The transceivers are preferably tiny, inexpensive, short-range transceivers that operate on globally available, unlicensed radio band, 2.45 gigahertz (GHz). The transceivers conform to the Bluetooth standard promoted by the Bluetooth Special Interest Group. Bluetooth is an open specification technology, whose specifications can be obtained from Bluetooth SIG, Inc. or downloaded from the following URL address: http://www.Bluetooth.com. A copy of the Bluetooth Radio Specification is attached to the present specification and is fully incorporated herein by reference. The transceivers can support data speeds of up to 721 kilo-bits per second as well as three voice channels. The transceivers can operate at at least two power levels: a lower power level that covers a range of about ten meters and a higher power level. The higher level covers a hundred-meter range, can function even in very noisy radio environments, and can be audible under severe conditions. The transceivers limit their output power to exactly that actually needed. If the receiving device is only a short distance away, the transceivers modify its signals to suit exact range. Furthermore, the radio automatically shifts to a low-power mode when traffic volume becomes low or stops. The power consumption of Bluetooth enabled devices is less than three percent of the power consumption of a mobile phone.

The invention contemplates eyewear with interchangeable temples housing a transceiver enabled with small-range wireless network technology, which allows the provided eyewear to form small-range ad-hoc networks with other devices equipped with similar transceivers.

The eyewear includes a frame and connected to the frame are two temples. The temples are connected to the frame hinges. The temples have a male portion of a connector, for example a one-eighth inch audio connector, incorporated in them. The female portion of the connector is made integral with the hinges. When the male portion is inserted into the female portion, the temple is attached to the frame. The temples can be removed by pulling the connector apart, and a temple with a different apparatus within it can be inserted in place of the removed temples.

In addition to housing a transceiver, each temple of the provided eyewear may have other communication devices, for example, an audio device, a camera, a speaker, a microphone, a display device such as a liquid crystal or an alarm device, co-molded within its body. A battery powering the transceiver and other co-molded devices can also be co-molded within one of the temples and connected to a co-molded device and the transceiver via a co-molded conductor.

In another embodiment, the eyewear, worn for example by an adult, comprises a distance alarm monitor to supervise the movement of a child. In this embodiment, a device, preferably in the form of a bracelet equipped with its own short-range transceiver, is worn by the child. The transceiv-

ers in the eyewear and the bracelet form a small-range wireless network, wherein the eyewear and the bracelet communicate with each other using signals conforming to the aforementioned Bluetooth standard. The transceiver in the eyewear is configured to activate the alarm when the distance between the bracelet and the eyewear exceeds a predetermined range.

Further features and advantages of the invention will become evident to one skilled in the art upon reading of the detailed description of the invention, which is given below by way of example only and with reference to the accompanying drawings.

BRIEF DESCRIPTION OF DRAWINGS

A full understanding of the invention can be gained from the following description of the preferred embodiments when read in conjunction with the accompanying drawings in which:

FIG. **1** is a schematic representation of a small-range wireless network formed by connecting an eyewear, constructed in accordance with the present disclosure, to a computer, a bracelet and a wireless telephone;

FIG. **2***a* is a schematic representation of the eyewear of FIG. **1** showing the removable temples of the eyewear and their connection to an eyewear frame;

FIG. **2***b* is a diagram of the hinge with the male connector portion extending out before being molded into the temple;

FIG. **2***c* is a diagram showing the hinge molded into the temple;

FIG. **2***d* is a diagram showing the spacial relationship of the pin of the hinge and the male connector portion;

FIG. **2***e* is a diagram showing the hinge, connector and circuitry such a Bluetooth PCB before being molded into the temple;

FIG. **2***f* is a diagram showing the spacial relationship of the assembly of FIG. **2***c* in the eyewear;

FIG. **3** is a flow chart of a network formed by the eyewear of the present invention and various communication devices, for example a mobile phone or a two-way radio;

FIG. **4** is a flow chart of a network formed by the eyewear of the present invention and various audio-playing devices such as an MP3 player;

FIG. **5** is a flow chart of a network formed by the eyewear having a camera mounted on its frame and various video-enabled devices, for example, a personal digital assistant (PDA) or a laptop computer;

FIG. **6** is a flow chart of a network formed by the eyewear having a camera mounted on one of its temples and various video-enabled devices, for example, a personal digital assistant (PDA) or a laptop computer;

FIG. **7** is a flow chart of a network formed by the eyewear of the present invention and a telephone conferencing device;

FIG. **8** is a schematic diagram of different components of the eyewear co-molded within the frame and temples of the eyewear;

FIG. **9** is a side perspective view of the eyewear provided with a transceiver and a pair of removable audio speakers;

FIG. **10** is a back perspective view of the eyewear shown in FIG. **8** with one of the speakers being removed from its temple;

FIG. **11** is a front perspective view of the eyewear provided with a digital camera mounted on the frame of the eyewear and a pair of speakers mounted on the temples; and

FIG. **12** is a schematic representation of the eyewear, having a microphone mounted on its temple, and a teleconferencing device being in communication with the eyewear.

DETAILED DESCRIPTION

A general concept of the preferred embodiment of the present invention is shown in FIG. **1**. In accordance with this embodiment, a wireless network **10** is formed by connecting eyewear **12** with computer **14**, bracelet **17** and telephone **16**. Eyewear **12** has a transceiver **18** mounted on one of the temples of the eyewear **12** (shown on the temple **19**). Computer **14**, bracelet **17** and telephone **16**, also have similar transceivers, (not shown), mounted on them. When a user of the eyewear **12** comes within a predetermined distance from the above devices, the transceivers of the eyewear and these devices start to communicate to each other thereby creating the ad hoc small-range wireless network **10**.

Transceiver **18** is a tiny, inexpensive, short range transceiver that operates on globally available, unlicensed radio band, 2.45 gigahertz (GHz). Transceiver **18** conforms to the Bluetooth standard. Bluetooth is an open specification technology, whose specifications can be obtained from Bluetooth SIG, Inc. or downloaded from the following URL address: http://www.Bluetooth.com. A copy of the Bluetooth Radio Specification is attached to the present specification and is fully incorporated herein. Transceiver **18** can support data speeds of up to 721 kilo-bits per second as well as three voice channels. The transceiver can operate at a lower power level that covers about ten meters and a higher power level which covers about a hundred meters. Transceiver **18** includes a chip **22** that along with software control, allows the user to preset which units transceiver **18** can communicate with. The Bluetooth technology allows transceiver **18** to function even in very noisy radio environments, and be audible under severe conditions, for example, during a thunderstorm.

A connection between the eyewear **12** having the transceiver **18** and one or more of any other devices forms a small range wireless network **10**, known as a piconet. Any device in the piconet, including the transceiver, can be configured to be a master, and the rest of the devices will be slaves. A different device may be configured to be the master at a different time, reverting the previous master to be a slave to the newly configured master. Several piconets can be established and linked together ad hoc, and a slave in one piconet can act as a master in another piconet. The clocks of all devices in the piconet are synchronized with the clock of the master. The full-duplex data rate within a multiple piconet structure with ten fully loaded, independent piconets can be more than 6 megabits per second.

Transceivers **18** and transceivers within other devices limit their output power to exactly that actually needed. If the receiving device is only a short distance away, the transceivers modify its signal to suit exact range. Furthermore, the radio automatically shifts to a low-power mode when traffic volume becomes low or stops. The low-power mode is interrupted by very short signal, with the purpose of verifying the established connection. Bluetooth enabled devices may have four modes of operation in a connection state. The four modes, in increasing order of power consumption are part, hold, sniff and active. Thus, the power consumption of Bluetooth enabled devices is less than three percent of the power consumption of a mobile phone.

Shown in FIG. **2***a* is a schematic representation of eyewear **12** of FIG. **1**. Eyewear **12** includes a frame **24**, and

connected to frame **24** are two temples **19** and **20**. Temples **19** and **20** are connected to frame **24** via hinges **26** and **28**, respectively. Although hinges **26** and **28** are shown to be adjacent to and separate from connector portions of the eyewear, it should be appreciated that this is done for illustration purposes only. As discussed further with respect to FIGS. **2***b*–**2***f*, in the preferred embodiment of the present invention each hinge is integral with one portion (either male or female) of the corresponding connector. Temples **19** and **20** each have a male portion **30** of a connector **34**, for example, a one-eighth inch audio connector, incorporated in it. Female portion **32** of connector **34** is made integral with hinges **26** and **28**. As it is evident to one skilled in the art, mounting positions of male portion **30** and female portion **32** may be reversed, as shown for example in FIGS. **2***b*–**2***f*. When male portion **30** is inserted in female portion **32**, temple **20** is attached to frame **24**. Temple **19** is also attached to frame **24** in a similar manner. Temples **19** and **20** can be removed by pulling the connection apart, and a different temple having a different apparatus within it can be inserted in place of temples **19** or **20**. Temples **19** and **20** when attached to frame **24** substantially hide hinges **26** and **28**, thereby making eyewear **12** esthetically better. A patent application filed by Gregg T. Swab, entitled "Exchangeable Eyeglass Temple Pieces Utilizing Quick-Connect Attachment" Ser. No. 09/532,427, describes temple pieces with quick-connect attachment for quick attachment and removal of the temple pieces to the frame.

Frame **24** has pads **42** and **44** located near hinges **28** and **26**, respectively. Temples **20** and **19** also have pads **46** and **48** which contact pads **42** and **44** respectively when temples **20** and **19** are in open position. The pads, when in contact, complete the electrical path thereby activating the circuits of apparatus **36**. Alternatively, a switch **50** may be located on temples **19** or **20** to activate the circuits.

The connected hinge which permits electrical conduction between the both emples and the frame enables the sharing of fuctionality between the left and right temples. It further enables the battery and the circuitry such as the Bluetooth PCB to be on opposing sides to accommodate more circuitry and their functions and to balance the weight and volume. The hinge enables dual mono orstereo speakers and can accommodate USB devices such as a digital camera.

FIG. **2***b* is a diagram of the hinge (an embodiment of **26** or **28**) with male connector portion **32** extending out before being molded into the temple **19**, **20**. FIG. **2***c* is a diagram showing the hinge molded into the temple. FIG. **2***d* is a diagram showing the spacial relationship of the pin **50** of the hinge and the male connector portion **32**. FIG. **2***e* is a diagram showing the hinge, connector **34** and circuitry **90** such a Bluetooth PCB before being molded into the temple. FIG. **2***f* is a diagram showing the spacial relationship of the assembly of FIG. **2***c* in the eyewear.

Temple **20** has co-molded within its body, an apparatus **36**. Apparatus **36** can be, for example, an audio device, a camera, a speaker, a microphone, and a display device such as a liquid crystal or an alarm. The apparatus includes electrical circuitry for operation in an electronics package such as a Bluetooth module with PCB. A battery **38**, can be co-molded within temple **20** or **19** and connected to the co-molded apparatus **36** via co-molded conductors **40**.

Other devices, such as a radio, a CD player, a hand held global positioning satellite system and a heart rate monitor, having their own transceivers similar to the transceiver **18**, can also be connected to the eyewear **12**. As shown in the flow-chart of FIG. **3**, in one embodiment of the present invention, the eyewear **12**, having the transceiver **18**, battery **52**, microphone **54** and speaker **56** molded into one of its temples, is connected to a mobile phone, a heart rate monitor or a two-way radio, represented in the flow-chart as one box **66**. All of these connected devices are equipped with their own transceivers **68**, similar to the transceiver **18**, and each transceiver is powered by a battery **72**. Since mobile phones, heart-rate monitors and two-way radios are typically battery operated, no additional power source is required to power transceivers **68**. A signal, for example audio information generated by the wearer of the eyewear **12**, is transmitted through the microphone **54** and transceiver **18** to the transceiver **68** associated with the intended recipient device, which device, upon receipt of the signal, performs a desired action, for example further conveys the received audio information. A similar embodiment of the present invention is shown in FIGS. **7** and **12** where the eyewear **12** is utilized in connection with telephone conferencing equipment **78**. The transceiver **18** of the eyewear **12** is then coupled to the transceiver **80** of the telephone conferencing equipment **78** for transmission/receipt of communication signals. This embodiment of the present invention may also be utilized together with a digital camera, as described more fully below, for video conferencing.

In another embodiment of the present invention, the eyewear **12** may be connected to various audio-playing devices, for example, an MP3 audio player **58**, through the eyewear transceiver **18** coupled to the MP3 player's transceiver **70**, as shown in the flow-chart of FIG. **4**. In this embodiment, one speaker is mounted on each temple of the eyewear **12**, i.e., a left speaker **60** is mounted on the left temple **19** and a right speaker **62** is mounted on the right temple **20**. Preferably, only one speaker (left speaker **60** in FIG. **4**) is connected directly to the transceiver **18**, the other speaker (right speaker **62** in FIG. **4**) is then connected to the first speaker through the electrically conductive connection of the two temples and the frame. Similarly to the above described embodiment, the MP3 player **58** is equipped with its own transceiver **70** capable of exchanging signals with the transceiver **18**. In operation, when MP3 player plays back previously stored music or any other stored audio signal, the transceiver **70** feeds this signal to the transceiver **18** which, in turn, conveys the signal to the speakers **60** and **62**. This embodiment of the present invention is further illustrated in FIGS. **9**–**10** showing the eyewear **12** having the transceiver **18** molded into the left temple **19**, the left speaker **60** removably mounted on the left temple **19** and the right speaker **62** removably mounted on the right temple **20**. Left temple **19**, frame **24** and right temple **20** form an electrically conductive link connecting the right speaker **62** to the left speaker **60**.

Various video or photo-enabled devices **74**, such as a laptop, personal digital assistant (PDA), mobile phone or others, can also be connected to the eyewear **12**, as shown in the flow-chart of FIG. **5**. In this embodiment, a small digital camera **64** is mounted on the frame **24** of the eyewear **12**, as shown for example in FIG. **11**. Camera **64** can preferably take digital still pictures as well as video images and transmit them through the transceiver **18** to one or several transceivers **76** of the connected devices **74**. If camera **64** is provided with software, such software may be stored on one of the connected devices **74**, for example the laptop computer. It is possible then to control camera **64** by transmitting commands, issued from the laptop computer, through the laptop's transceiver **76** to the eyewear's transceiver **18**, which then conveys the commands to the camera for fulfillment. This embodiment may be particularly useful

if utilized together with the child's alarm system described below. In the described embodiment, the electrically conductive connection of the two temples and the frame is necessary in order for the signal to be conveyed to and from the connected devices. However, if such connection is not desirable, camera **64** may be located on the same temple, for example temple **19**, with the transceiver **18**. An electrical connection link between the camera and the transceiver may then be embodied within the single temple, as shown in the flow-chart of FIG. **6**.

FIG. **8** illustrates a possible combination of the eyewear components described in the previous embodiments. As described above, the eyewear comprises the frame **24** and two temples: left temple **19** and right temple **20**. Frame **24** preferably houses the camera **64** for taking video images and still photographs. Right temple **20** preferably houses a removable right speaker **62**. Left temple **19** preferably houses a removable left speaker **60**, microphone **54**, transceiver **18** and battery **52**. When the eyewear **12** is open, as shown in FIG. **8**, the electrical circuit of the conductive connection between all the components is closed, thereby enabling battery **52** to power all of the components located on the frame and the opposite temple.

In another embodiment, eyewear **12** worn for example by an adult, comprises a distance alarm monitor to supervise the movement of a child. In this embodiment, a device, preferably in the form of a bracelet **17** equipped with its own short-range transceiver (see FIG. **1**), is worn by the child. Transceiver **18** in the eyewear and transceiver in the bracelet **17** form a small-range wireless network, wherein the eyewear and the bracelet communicate with each other using signals conforming to the aforementioned Bluetooth standard. The transceiver **18** in the eyewear **12** is configured to activate the alarm when the distance between the bracelet **17** and the eyewear **18** exceeds a predetermined range. The alarm could be, for example, a video alarm like a red light, or an audio alarm like an audible beep or vibratory alarm. Of course the functions of the eyewear and the bracelet may be reversed, i.e. the bracelet with a distance alarm monitor is worn by the supervising adult and the eyewear with its own transceiver is worn by the child. Alternatively, two pairs of eyewear may be provided, one with an alarm monitor and a controlling transceiver, to be worn by the adult, and another with a controlled transceiver, to be worn by the child.

The invention also includes the methods of manufacturing the eyewear. The eyewear is manufactured in a process to create electrical components contained throughout the entire frames and temples. Electrical components discussed above and electrical conductors are embedded in the temple and frame portions for the purpose of supplying electrical energy to the various components. In one method some or all of the components, including the conductive wires are co-molded into the temples and frames. This is an in-process method where the components are inserted into the temple and frame tools. The mold cycle is started, plastic material flows into the core and covity of the tool, and the components are permanently set in the rigid temples and frames.

Alternatively, the method of manufacture may be that some or all of the components, including the conductive wires, are assembled into piece parts that make up the temples and frames. The piece parts that make up the temples and frames are designed and injection molded to facilitate easy insertion and assembly of mechanical and electrical components. Further, a combination of the co-molded and assembled components may be used to maximize efficiency.

While particular embodiments of the present invention have been described, it will be apparent to those skilled in the art that changes and modifications may be made without departing from this invention in its broader aspect and, therefore, the appended claims are to encompass within their scope all such changes and modifications that fall within the true sprit and scope of this invention.

We claim:

1. An eyewear comprising:

a frame;

at least two hinges, each hinge further comprising an electrical insert and a receiver; and

at least two temples,

wherein said electrical insert is removably insertable into said receiver and securable within said receiver without a hinge pin, such that the insertion of said electrical insert into said receiver both releasably attaches one of said temples to said frame and establishes an electrical connection between said frame and said one temple, and wherein each of said temples could be replaced by a second temple.

2. The eyewear of claim **1** wherein said second temple has co-molded within it, an apparatus selected from a group consisting of an audio device having a speaker and a microphone, a camera, a display device, a distance alarm and an ear bud.

3. The eyewear of claim **1** wherein said second temple has co-molded therein a radio transceiver.

4. The eyewear of claim **3** wherein said radio transceiver is capable of forming an ad hoc wireless network with a plurality of devices.

5. The eyewear of claim **1** wherein said frame has co-molded therein a radio transceiver.

6. The eyewear of claim **5** wherein said radio transceiver is capable of forming an ad hoc wireless network with a plurality of devices.

* * * * *