Ali S. Razai (SBN 246922)
ali.razai@knobbe.com
Mark Lezama (SBN 253479)
mark.lezama@knobbe.com
Justin J. Gillett (SBN 298150)
justin.gillett@knobbe.com
Brandon G. Smith (SBN 307676)
brandon.smith@knobbe.com
KNOBBE, MARTENS, OLSON & BEAR, LLP
2040 Main Street, Fourteenth Floor
Irvine, CA 92614
Telephone: 949-760-0404
Facsimile: 949-760-9502

Attorneys for Defendants
LUXOTTICA GROUP S.P.A. and
LUXOTTICA OF AMERICA INC.

IN THE UNITED STATES DISTRICT COURT

FOR THE CENTRAL DISTRICT OF CALIFORNIA

E-VISION OPTICS, LLC, and E-VISION SMART OPTICS, INC., Plaintiffs, v. LUXOTTICA GROUP S.P.A. and LUXOTTICA OF AMERICA INC., Defendants.	Case No. 8:23-cv-02013 AB (SHKx) **LUXOTTICA'S OPENING CLAIM-CONSTRUCTION BRIEF** Hearing: October 11, 2024 11:00 a.m. Courtroom 7B Honorable André Birotte Jr.

TABLE OF CONTENTS

I. INTRODUCTION 1

II. BACKGROUND 2

III. BASIC PRINCIPLES OF CLAIM CONSTRUCTION 6

IV. ARGUMENT 6

A. The construction of the *module* terms must capture their modularity. 6

1. *electronics module* ('174 claim 1; '541 claim 1) 7

2. *application module* ('960 claim 1) 9

a. The '960 patent requires an application module to be replaceable and capable of being docked to the eyewear. 9

b. e-Vision's proposed construction would equate *application module* with any electronic device performing a function and would thereby read out any requirement for a *module*. 11

B. For the two *couple-to-constrain* terms, the Court should hold e-Vision to the applicants' definitions. 12

1. *couple the electronics module to the first temple to constrain the electronics module* ('174 claim 1) 12

2. *coupling the capacitive touch switch to a partial enclosure to constrain the capacitive touch switch* ('174 claim 15) 14

C. *inductively rechargeable battery* ('483 claims 17, 36) 16

D. *conductive path* ('174 claim 1) 17

E. *verbal query* ('960 claim 1) 17

V. CONCLUSION 18

TABLE OF AUTHORITIES

BMC Software, Inc. v. ServiceNow, Inc.,
No. 2:14-cv-903, 2015 WL 4776970 (E.D. Tex. Aug. 13, 2015) 7, 14

Chevron U.S.A. Inc. v. Univ. of Wyoming Rsch. Corp.,
978 F.3d 1361 (Fed. Cir. 2020) 13

C.R. Bard, Inc. v. U.S. Surgical Corp.,
388 F.3d 858 (Fed. Cir. 2004) 10

Data Engine Techs. LLC v. Google LLC,
10 F.4th 1375 (Fed. Cir. 2021) 8

Festo Corp. v. Shoketsu Kinzoku Kogyo Kabushiki Co.,
535 U.S. 722 (2002) 13

Infinity Headwear & Apparel, LLC v. Jay Franco & Sons, Inc.,
No. 15-cv-1259, 2016 WL 5372843 (S.D.N.Y. Sept. 26, 2016) 7, 14

In re Varma,
816 F.3d 1352 (Fed. Cir. 2016) 14

LizardTech, Inc. v. Earth Resource Mapping, Inc.,
424 F.3d 1336 (Fed. Cir. 2005) 10

O2 Micro Int'l Ltd. v. Beyond Innovation Tech. Co.,
521 F.3d 1351 (Fed. Cir. 2008) 17

Parkervision, Inc. v. Vidal,
88 F.4th 969 (Fed. Cir. 2023) 7, 13, 17

Phillips v. AWH Corp.,
415 F.3d 1303 (Fed. Cir. 2005) 6, 14

Sinorgchem Co. v. Int'l Trade Comm'n,
511 F.3d 1132 (Fed. Cir. 2007) 7, 13

Vitronics Corp. v. Conceptronic, Inc.,
90 F.3d 1576 (Fed. Cir. 1996) 6, 7, 17

Wisconsin Alumni Rsch. Found. v. Apple Inc.,
905 F.3d 1341 (Fed. Cir. 2018) 11

I. INTRODUCTION

e-Vision alleges that two lines of Luxottica's Ray-Ban smartglasses infringe 45 claims of five patents. The asserted patents were originally filed by the now-defunct PixelOptics. PixelOptics tried to develop glasses with electronic lenses that could change focus with the touch of a button. The idea was these "electro-active" lenses could replace traditional bifocals. When the business failed, PixelOptics sold its assets, and its patents eventually ended up in the hands of e-Vision, whose business is patent monetization.

The accused Ray-Ban products have no electro-active lenses. Instead, they take pictures, record video, and interact with a smartphone. They do not resemble any technology PixelOptics invented.

The asserted patent claims do not focus on electro-active lenses. Rather, they are directed to combining electronics with eyewear. But combining electronics with eyewear dates back at least to the 1950s. The patent applicants therefore had to limit the claims with carefully cabined language.

But the carefully selected claim language does not cover the Ray-Ban products. As a result, e-Vision now seeks to broaden the claims beyond their proper scope. e-Vision asks the Court to read out key limitations and ignore express definitions in the patents.

For example, some asserted claims recite modules, such as an *electronics module* or *application module*. The specifications and file histories demonstrate that modularity is important to the alleged inventions. The patent applicants defined *electronics module* to be a housing or container with electronics inside, as opposed to just any collection of electronics that may or may not be packaged together. Similarly, the applicants distinguished their *application module* from prior art with built-in electronics. Unlike that prior art, the application module is "easily replaced" when broken and is interchangeable with other modules. Rather than a user needing several pairs of glasses each with their own functionality, the swappable nature of

the modules allows the user to augment a single pair of eyeglasses with multiple different functionalities. The accused Ray-Ban glasses lack the claimed modularity, so e-Vision seeks to read *module* out of the claims.

From the 45 asserted claims across five different patents with five different specifications, Luxottica requests construction of six terms. Luxottica proposes constructions that would hold e-Vision to representations the applicants made about the scope of the alleged inventions. These representations take on several forms. Some are express definitions appearing in the specification. Others are definitions adopted before the Patent and Trademark Office (PTO). And others are statements distinguishing the alleged inventions from the prior art.

In contrast, for most terms, e-Vision asks the Court not to construe the claim language at all and instead leave it to the jury to apply an undefined "plain and ordinary meaning." In the two cases in which e-Vision proposes a construction, its proposals conflict with the intrinsic evidence. e-Vision must be held to the representations in the intrinsic record.

The Court should reject e-Vision's bid to improperly broaden the scope of its claims.

II. BACKGROUND

e-Vision asserts Luxottica infringes U.S. Patent Nos. 8,708,483, 8,801,174, 8,905,541, 10,598,960, and 10,613,355. The parties request the Court construe terms from four patents: the '483, '174, '541, and '960 patents.

All four patents focus on electronics for glasses with electro-active lenses. (*E.g.*, Lezama Decl. Ex. 1 ('483 patent) 1:40–42 ("The present invention discloses controlling an electro-active lens in a deliberate, hands free manner that gives the user control of the electro-active lens."); Ex. 2 ('174 patent) 14:60–65; Ex. 4 ('541 patent) 1:48–53, 6:27–28; Ex. 5 ('960 patent) 14:19–63.) In each case, the key electronics are packaged as a "module."

For example, the ’174 and ’541 patents rely on an “electronics module.” Figure 14 of the ’174 patent illustrates an example (for better image quality, Luxottica uses the original color images submitted to the PTO):

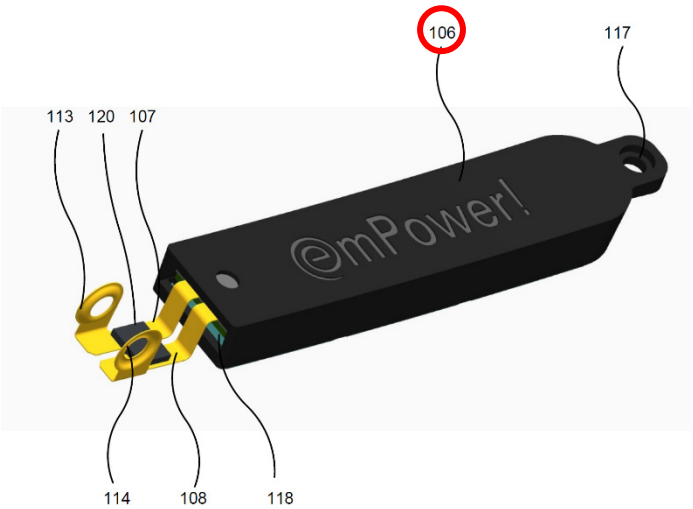

(Lezama Decl. Ex. 3 fig. 14 (red mark-up added).) In the figure above, conductors in yellow have been inserted into an opening of the module’s housing to connect with the electronics inside. (’174 patent 19:31–41 (referring to figure “13” but intending figure 14).) The module can be inserted into a temple of a pair of glasses, such as to control electro-active lenses:

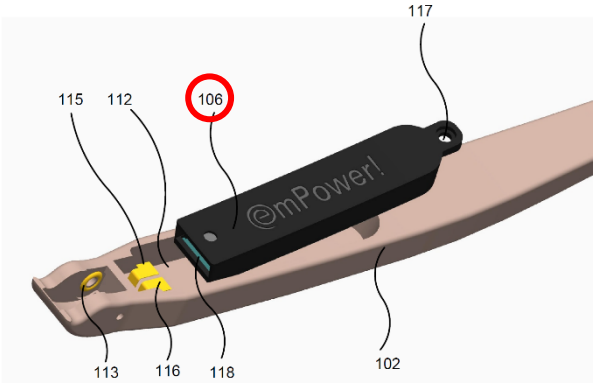

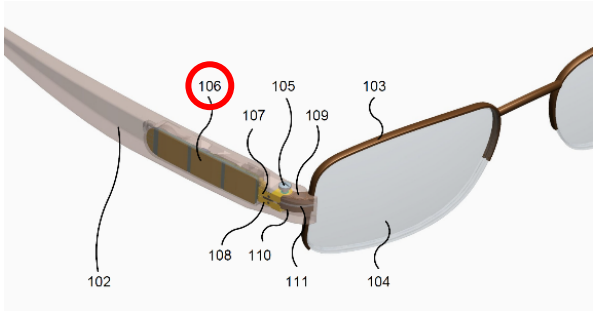

(Lezama Decl. Ex. 3 fig. 12 (on left), fig. 2 (on right).)

The ’541 patent illustrates a similar electronics module 307 that fits inside a temple 300:

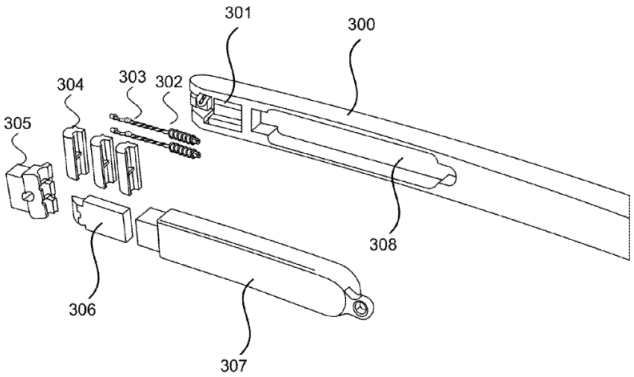

(’541 patent 18:45–47, fig. 3.)

The ’960 patent describes “application modules” that dock with a docking station. Because the images as published in the issued patent are grainy, Luxottica uses the higher-quality images originally submitted with the ’960 patent’s grandparent application. (Lezama Decl. ¶ 9, Ex. 8.) Figure 1 illustrates an application module with “docking pins”:

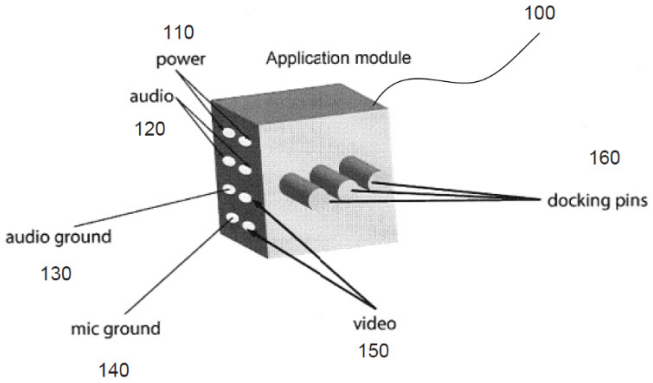

Figure 2A shows an eyewear temple with a recessed portion in which the application module fits. (’960 patent 11:13–16, 12:6–9.)

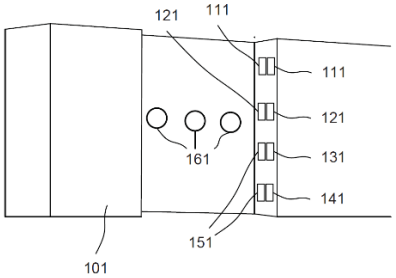

FIG. 2A

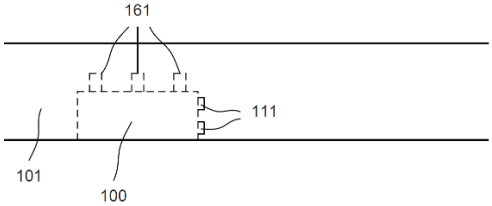

FIG. 2B

The recessed portion itself has recesses or ports 161 for receiving the application module's docking pins 160. (*Id.*) Figure 2B shows the application module docked to the temple. (*Id.*) Figure 3 shows an alternative approach in which application modules 226 and 236 are plugged into docking stations 210 and 211 but jut out from the temples:

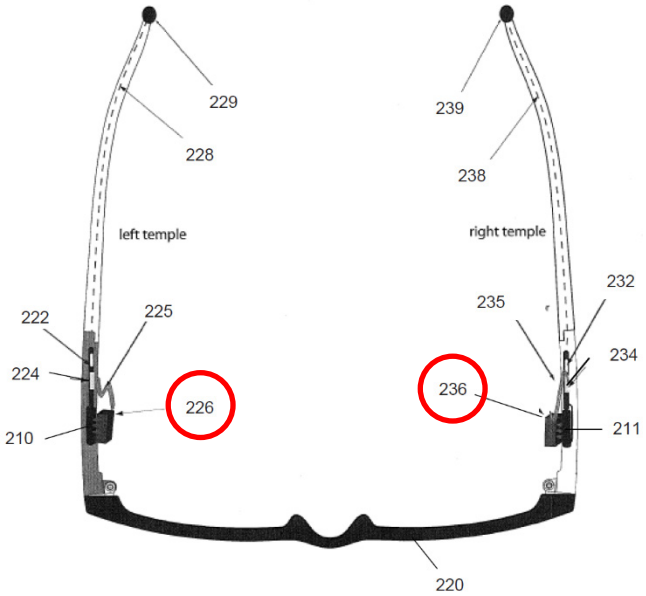

FIG. 3

(*Id.* at 12:19–22.)

The '960 patent states its application modules can be removed and "easily replaced." (*Id.* at 2:9–11.) According to the patent, a key advantage of its technology is that it allows "a variety of functional modules" to be "interchanged with an eyewear system using a 'universal docking station.'" (*Id.* at 9:43–48; *also id.* at 2:4–9.) The interchangeability of the modules allows the user to augment a single pair of eyeglasses with multiple different electronic functionalities. (*Id.* at 1:59–62, 2:4–9.)

III. BASIC PRINCIPLES OF CLAIM CONSTRUCTION

The words of a patent claim "are generally given their ordinary and customary meaning." *Phillips v. AWH Corp.*, 415 F.3d 1303, 1312 (Fed. Cir. 2005) (en banc) (quoting *Vitronics Corp. v. Conceptronic, Inc.*, 90 F.3d 1576, 1582 (Fed. Cir. 1996)). That is "the meaning that the term would have to a person of ordinary skill in the art in question at the time of the invention." *Id.* at 1313. "Importantly, the person of ordinary skill in the art is deemed to read the claim term not only in the context of the particular claim in which the disputed term appears, but in the context of the entire patent, including the specification." *Id.* The person of ordinary skill is also assumed to have read the patent's file history. *Id.*

Accordingly, "the specification is always highly relevant to the claim construction analysis. Usually, it is dispositive; it is the single best guide to the meaning of a disputed term." *Id.* at 1315 (internal quotation marks and citation omitted). Additionally, "the prosecution history can often inform the meaning of the claim language by demonstrating how the inventor understood the invention and whether the inventor limited the invention in the course of prosecution, making the claim scope narrower than it would otherwise be." *Id.* at 1317.

To construe the claims, a court may also consider extrinsic evidence such as dictionaries and expert testimony, but the court should consider whether the extrinsic evidence is consistent with the intrinsic evidence of the patent and its file history. *Id.* at 1317–19.

IV. ARGUMENT

A. The construction of the *module* terms must capture their modularity.

Luxottica asks the Court to construe the *module* terms in ways that capture the key characteristics of modularity that each patent emphasizes. In contrast, e-Vision asks the Court either to decline to construe the term or to read out modularity from the claims so that the term can encompass any collection of electronics.

1. *electronics module* ('174 claim 1; '541 claim 1)

e-Vision's Position	Luxottica's Proposed Construction
No construction necessary / Plain and ordinary meaning	a housing or container with one or more electronic components disposed therein

The '174 and '541 patents expressly define *electronics module*. The '174 patent states: "As used herein, an 'electronics module' may refer to a housing or container that may comprise one or more electronic components disposed therein." ('174 patent 8:8–10.) Similarly, the '541 patent states: "As used herein, an 'electronics module' may refer to a housing or container that comprises a plurality of electrical components." ('541 patent 7:45–47.)

In each case, the statement appears in an extensive definition section of the patent, along with over a dozen other statements similarly explaining how a term is "used herein." ('174 patent cols. 6–9; '541 patent cols. 6–9.) Using "the phrases 'as used herein' and 'refer to' conveys an intent for [the sentence] to be definitional." *Parkervision, Inc. v. Vidal*, 88 F.4th 969, 976 (Fed. Cir. 2023). So does putting *electronics module* in quotation marks. *Sinorgchem Co. v. Int'l Trade Comm'n*, 511 F.3d 1132, 1136 (Fed. Cir. 2007). While these specification statements are phrased in terms of what *electronics module* "may refer to," courts have found materially identical language to constitute an express definition. *BMC Software, Inc. v. ServiceNow, Inc.*, No. 2:14-cv-903, 2015 WL 4776970, at *13 (E.D. Tex. Aug. 13, 2015) (finding "explicit definition" where patent stated: "As used herein, a 'namespace' *may refer to*…." (emphasis added)); *Infinity Headwear & Apparel, LLC v. Jay Franco & Sons, Inc.*, No. 15-cv-1259, 2016 WL 5372843, at *9 (S.D.N.Y. Sept. 26, 2016) (also finding "explicit definition" in similar specification statement regarding "blanket").

"The specification acts as a dictionary when it expressly defines terms used in the claims or when it defines terms by implication." *Vitronics*, 90 F.3d at 1582.

Therefore, based on the specification statements alone, *electronics module* means: a housing or container with one or more electronic components disposed therein.

While the specification definitions suffice on their own, the file history provides further support. The applicants confirmed during prosecution of the '541 patent that the "as used herein" statement was definitional. The PTO examiner rejected pending claims as indefinite under 35 U.S.C. § 112 because it was unclear what *electronics module* meant. (Lezama Decl. Ex. 7 at E_PA_LUX_003530–31 ("It's not clear which structure feature is means [sic] by term 'electronics module'.").) The term was indefinite because it appeared to encompass "a sum of electronic components which may or may not be connected with one another and may or may not be close to one another." (*Id.*)

In a response on May 16, 2014, the applicants addressed the examiner's concern by representing: "The claimed 'electronics module' is clearly defined in the specification." (*Id.* at E_PA_LUX_003562.) The applicants stated the definition could be found "at paragraph [0070] of the published application, which states: As used herein, an 'electronics module' may refer to a housing or container that comprises a plurality of electrical components…." (*Id.*) "Accordingly," they continued, "Applicants respectfully assert that the electronics module is clearly defined and request that the rejection under 35 U.S.C. § 112 be withdrawn." (*Id.*) Based on that argument and others, the examiner allowed the claims: the claims were "allowable for reasons set forth on pages 6-13 of the Remarks by Applicant filed on 5/16/14." (*Id.* at E_PA_LUX_003578.) The prosecution history thus confirms the specification's definition of *electronics module*. *Data Engine Techs. LLC v. Google LLC*, 10 F.4th 1375, 1382 (Fed. Cir. 2021) (giving "effect to [an] express definition in the prosecution history").

The Court should enforce the definition appearing in the specification and confirmed during prosecution: an *electronics module* is a housing or container with one or more electronic components disposed therein.

2. *application module* ('960 claim 1)

e-Vision's Proposed Construction	Luxottica's Proposed Construction
One or more electronic devices configured to perform a function	a replaceable device that can be docked to the eyewear to support an application

The parties agree the Court should construe *application module* but disagree on how the Court should construe the term.

a. The '960 patent requires an application module to be replaceable and capable of being docked to the eyewear.

The purported invention of the '960 patent is a docking station for application modules. The patent's title is "Eyewear Docking Station and Electronic Module." The patent repeatedly emphasizes the importance of the docking capability to what is "inventive." (*E.g.*, '960 patent 11:52 ("inventive docking station"), 16:3 ("inventive docking means"), 20:44–45 (application module "docked within the inventive eyewear docking station").)

The '960 patent distinguishes its allegedly inventive application module by contrasting it with the prior art. According to the '960 patent, "the prior art teaches eyeglasses capable of one or more applications, but in all cases the applications are built into the eyeglasses or, if attached to the eyeglass frames, do so such that only one application device at a time is available in addition to the standard lenses housed by the eyeglass frames." (*Id.* at 1:33–48.) The patent states that it has improved on this drawback, describing that, in contrast to the prior art, "[t]he present subject matter ***is directed to electronic eyewear modules*** and systems to be worn by a wearer, whereby ***an electronic eyewear system with a docking station can be easily joined with a plurality of electronic application modules*** (also referred to herein as application devices or application modules), preferably in a standardized manner." ('960 patent 1:66–2:4 (emphasis added).) "These application modules can each *fit together with the docking station*…." (*Id.* at 2:4–6 (emphasis added).) "In the event

that electronic application modules break, *they can also be easily replaced without replacing the entire system*." (*Id.* at 2:9–11 (emphasis added).)

The '960 patent thus presents its replaceable application modules that are designed to be docked to eyewear as an improvement over the prior art. The prior art was limited, for example, to "applications [that were] built into the frame." (*Id.* at 1:34–48.) In contrast, the invention of the '960 patent is directed to "application modules" that are replaceable rather than built-in, and that modularity provides a user "with a variety of interchangeable applications." (*Id.* at 2:7–11.)

e-Vision cannot now ignore the term *module* in the claims or the express teachings of the specification. Indeed, "it would be peculiar for the claims to cover prior art that suffers from precisely the same problems that the specification focuses on solving." *LizardTech, Inc. v. Earth Resource Mapping, Inc.*, 424 F.3d 1336, 1343-44 (Fed. Cir. 2005); *see also C.R. Bard, Inc. v. U.S. Surgical Corp.*, 388 F.3d 858, 864–66 (Fed. Cir. 2004) (broad statements in summary and abstract "clearly define[d]" the invention). For this reason alone, the Court's construction should reflect an application module's key characteristics of being (1) replaceable and (2) capable of being docked to the eyewear.

The specification further confirms Luxottica's construction by repeatedly and exclusively identifying the application module as docked and removable. For example, the application module is "adapted to be mounted to an eyewear docking station" ('960 patent 9:23–24) and may become functional "upon being docked" (*id.* at 13:52–56). Consistent with its criticism of prior-art glasses with built-in applications, the specification focuses exclusively on an application module that is replaceable and docked to a docking station. (*E.g.*, *id.* at 12:21–22, 17:62–67, 18:27–28, 20:43–55; 10:60–11:3; 11:13–23; 11:24–35; 13:52–56; 15:62–64; 15:65–16:1.) "Where, as here, a patent repeatedly and consistently characterizes a claim term in a particular way, it is proper to construe the claim term in accordance with that

characterization." *Wisconsin Alumni Rsch. Found. v. Apple Inc.*, 905 F.3d 1341, 1351 (Fed. Cir. 2018) (internal quotation marks omitted).

The Court should construe *application module* as: a replaceable device that can be docked to the eyewear to support an application.

b. e-Vision's proposed construction would equate *application module* with any electronic device performing a function and would thereby read out any requirement for a *module*.

e-Vision proposes construing *application module* as "one or more electronic devices configured to perform a function." e-Vision improperly reads out the modularity that is at the heart of the '960 patent. e-Vision would broaden the claim to encompass a collection of electronics disposed in a frame, which is the very prior art that the '960 patent disparaged.

While the '960 patent mentions more than once that an application module may include an electronic device configured to perform a function, it does not equate *application module* with such an electronic device. The specification demonstrates an application module requires more. Indeed, every time the patent states an application module may include such an electronic device, the patent also states the application module is docked to the docking station. In some cases, the patent also identifies additional characteristics of the application module.

For example, the Abstract first describes the application module as "adapted to be mounted to the docking station"; only after identifying that important characteristic does it state the module "include[es] an electronic device configured to perform a function," *and* a "set of preconfigured application connection points." Similarly, the Summary begins with: "an application module is provided that is adapted to be mounted to an eyewear docking station"; only after that does it state the module "may include one or more of an electronic device configured to perform a function; an attachment mechanism configured to secure the application module to the docking station in a substantially fixed position; and/or a plurality of

preconfigured application connection points." ('960 patent 2:19–26.) Elsewhere, immediately after identifying the kinds of electronic devices the module may include, the '960 patent states: "One advantage of the present subject matter is that, as discussed further below, a variety of functional modules may be interchanged with an eyewear system using a 'universal docking station,'…." (*Id.* at 9:43–46.)

e-Vision thus improperly singles out one aspect of what an application module includes and treats it as definitional. Accepting e-Vision's construction would broaden *application module* to encompass devices without any "modularity." (*See id.* at 2:8.) e-Vision ignores the teachings of the specification and seeks a construction that would capture the prior art that the patent distinguishes from the alleged invention. Adopting e-Vision's construction would erase *module* from the claim.

B. For the two *couple-to-constrain* terms, the Court should hold e-Vision to the applicants' definitions.

1. *couple the electronics module to the first temple to constrain the electronics module* ('174 claim 1)

e-Vision's Position	Luxottica's Proposed Construction
No construction necessary / Plain and ordinary meaning	physically secure or provide a restraining force to the electronics module to retain the module in a fixed position within the temple

Claim 1 of the '174 patent recites a device with a housing for lenses and movable temples—in other words, claim 1 covers at least some category of eyeglasses. The device must have an electronics module at least partially within a temple. And it must have electrical conductors coupled to the temple. Claim 1 also recites that "the first and second electrical conductors are configured to *couple the electronics module to the first temple to constrain the electronics module*." The parties dispute whether and how to construe the italicized phrase. e-Vision asks the

Court to punt the dispute to the jury. But the Court should hold e-Vision to the applicants' express definitions of *couple* and *constrain*.

The applicants defined *couple* in this limitation during prosecution. At the time, the claim recited a portion of the claim language at issue: "wherein the first electrical conductor is *configured to couple the electronics module to the first temple*." (Lezama Decl. Ex. 6 at E_PA_LUX_001519 (claim 41, which was later renumbered as claim 1).) When the PTO examiner rejected this version of the claim, the applicants argued: "The specification at paragraphs [0074]-[0076] *clearly defines* a conductor that 'couples' a module to the frame as *physically securing or applying a force to the module*, as opposed to simply providing an electrical connection." (*Id.* at E_PA_LUX_001760 (emphases added).) To overcome a PTO rejection, the applicants later amended the claim to add *constrain* (*id.* at E_PA_LUX_001800, -1805–06), thereby imposing an additional limitation. *See Festo Corp. v. Shoketsu Kinzoku Kogyo Kabushiki Co.*, 535 U.S. 722, 734–37 (2002) (narrowing amendments include those that add limitations to overcome a rejection).

The '174 patent specification defines *constrain*:

> In some embodiments, the first electrical conductor may be configured to constrain or substantially constrain the electronics module. *As used in this context, "constrain" may refer to when the first electrical conductor is configured to provide support (**i.e. a restraining force**) for the electronics module to retain the module in a fixed position within the temple.* That is, the first electrical conductor may be configured to hold the electronics module in place.

('174 patent 11:50–57 (italics and boldface added).) The '174 patent sets off *constrain* in quotation marks and states how that term is "used" in the same context as it appears in the claim. The Federal Circuit has held similar language evinces an intent to define a term. *Parkervision*, 88 F.4th at 976; *Sinorgchem*, 511 F.3d at 1136; *Chevron U.S.A. Inc. v. Univ. of Wyoming Rsch. Corp.*, 978 F.3d 1361, 1366 (Fed.

Cir. 2020). Moreover, the '174 patent employs the same formula that, as the applicants represented to the PTO, "clearly defined" *electronics module* in the '541 patent. (*Supra* § IV.A.1.) The use of "may" does not change that result. *BMC Software*, 2015 WL 4776970, at *13; *Infinity Headwear*, 2016 WL 5372843, at *9.

The intrinsic record is clear that the phrase *couple the electronics module to the first temple to constrain the electronics module* means physically secure or provide a restraining force to the electronics module to retain the module in a fixed position within the temple.

2. *coupling the capacitive touch switch to a partial enclosure to constrain the capacitive touch switch* ('174 claim 15)

e-Vision's Position	Luxottica's Proposed Construction
No construction necessary / Plain and ordinary meaning	physically securing or providing a restraining force to the capacitive touch switch to retain the capacitive touch switch in a fixed position relative to an enclosure that substantially surrounds the electronic components that are disposed on a surface of the capacitive touch switch

Claim 15 of the '174 patent recites a similar *couple-to-constrain* limitation: "coupling the capacitive touch switch to a partial enclosure to constrain the capacitive touch switch."

"Because claim terms are normally used consistently throughout the patent, the usage of a term in one claim can often illuminate the meaning of the same term in other claims." *Phillips*, 415 F.3d at 1314. "[T]he principle that the same phrase in different claims of the same patent should have the same meaning is a strong one, overcome only if 'it is clear' that the same phrase has different meanings in different claims." *In re Varma*, 816 F.3d 1352, 1363 (Fed. Cir. 2016) (internal citation

omitted). The Court should therefore construe *coupling* and *constrain* in claim 15 consistently with claim 1. (*See supra* § IV.B.1.)

Next, the '174 patent expressly defines *partial enclosure* in the context of coupling a capacitive touch switch to such an enclosure—indeed, in the context of method steps reproduced verbatim in claim 15:

> The first method may include the steps of providing a capacitive touch switch, disposing a plurality of electronic components on the capacitive touch switch, and coupling the capacitive touch switch to a partial enclosure.
>
> *As used in this context, a "partial enclosure" may refer to a component or components that may substantially surround the electronic components that are disposed on a surface of the capacitive touch switch.*

('174 patent 23:38–46 (emphasis added); *see also id.* at 23:49–54 (partial enclosure "need not completely enclose or encircle the electronic components").)

During prosecution, the applicants confirmed this specification definition applied to claim 15. Responding to a PTO rejection of the claim based on prior art, the applicants explained: "[the prior art] does <u>not</u> disclose or suggest *coupling* the capacitive touch switch *to a partial enclosure*, as that term is used in the specification and recited by independent claim [15]." (Lezama Decl. Ex. 6 at E_PA_LUX_001762 (referring to claim 57, which issued as claim 15; emphasis in original).)

The Court should hold e-Vision to the applicants' definitions of *couple*, *constrain*, and *partial enclosure* and construe *coupling the capacitive touch switch to a partial enclosure to constrain the capacitive touch switch* as: physically securing or providing a restraining force to the capacitive touch switch to retain the capacitive touch switch in a fixed position relative to an enclosure that substantially surrounds the electronic components that are disposed on a surface of the capacitive touch switch.

C. *inductively rechargeable battery* ('483 claims 17, 36)

e-Vision's Position	Luxottica's Proposed Construction
No construction necessary / Plain and ordinary meaning	battery that is recharged through wireless power transfer rather than direct electrical contact

Claims 17 and 36 of the '483 patent depend from claims 1 and 19. They add that the module includes a power source and that the power source comprises an *inductively rechargeable battery*. The ordinary meaning of inductive charging is: "a means of transferring electrical energy from one part (area) of a circuit to another part *without requiring any ohmic (wire) connection*." (Lezama Decl. Ex. 9 (defining *inductive coupling*; emphasis added).) Or in other words: wireless power transfer, as opposed to power transfer through direct electrical contact.

The '483 patent itself draws this distinction:

> The module includes a drive circuit 1040 placed above a rechargeable battery 1050. Below the battery is a recharging coil 1060. The charging coil is used to inductively recharge the battery *without direct contact*.

('483 patent 9:12–18 (emphasis added).) The Court should therefore construe *inductively rechargeable battery* to mean a battery that is recharged through wireless power transfer rather than direct electrical contact.

e-Vision invites the Court not to construe this term and instead instruct a lay jury to rely on the "plain and ordinary meaning." The Court should decline for two reasons. First, a lay jury cannot be expected to know the ordinary meaning of this technical term. Second, simply invoking the "ordinary meaning" does nothing to resolve the parties' dispute over whether *inductively rechargeable* requires wireless power transfer or permits transfer through direct electrical contact. The accused Ray-Ban Stories and Ray-Ban Meta products have a rechargeable battery, but that battery cannot be charged wirelessly. Instead, the accused products recharge by direct electrical contact between metal surfaces. e-Vision has never explained how such a

battery is *inductively* rechargeable. "When the parties present a fundamental dispute regarding the scope of a claim term, it is the court's duty to resolve it." *O2 Micro Int'l Ltd. v. Beyond Innovation Tech. Co.*, 521 F.3d 1351, 1362 (Fed. Cir. 2008). Without resolution by the Court, the parties would be forced to argue the legal significance of *inductively rechargeable* to the jury, which would be improper. *Id.*

D. *conductive path* ('174 claim 1)

e-Vision's Position	Luxottica's Proposed Construction
No construction necessary / Plain and ordinary meaning	a continuous path for which electrons (i.e. current) may flow from one point to another

Claim 1 of the '174 patent recites that each conductor provides (at least in part) a *conductive path* from the first temple to the lens housing. e-Vision seeks to avoid the patent's definition, while Luxottica seeks to enforce it. The '174 patent states: "As used herein, a 'conductive path' refers to a continuous path for which electrons (i.e. current) may flow from one point to another." ('174 patent 6:45–47.) Because the '174 patent expressly defines *conductive path*, that definition controls. *Parkervision*, 88 F.4th at 976; *Vitronics*, 90 F.3d at 1582.

E. *verbal query* ('960 claim 1)

e-Vision's Proposed Construction	Luxottica's Position
Verbal question raised orally by a wearer of the eyewear	No construction necessary

The term *verbal query* is readily understood and needs no construction. e-Vision seeks to improperly limit the claim to avoid prior art. e-Vision's proposed construction is incorrect for two reasons.

First, it improperly limits the query to a "question," excluding other types of requests such as directions or commands. e-Vision's construction would encompass "What is the weather today?" but would exclude "Tell me what the weather is

today." In the field of electronics relevant here, a query need not take the form of a question. Rather, a query may, for example, be a "specific set of instructions for extracting particular data" or a "computer instruction to interrogate a data base." (Lezama Decl. Exs. 10, 11.) The '960 patent is consistent with that ordinary meaning. The '960 patent's specification discloses that the application module may respond to a verbal "direction" or "command" from the wearer of the eyewear—not just "questions," which is a term that also appears in the specification. ('960 patent at 20:5–36; *see also id.* 13:9–13.) Because the applicants discussed "directions," "commands," and "questions" in the specification but used the broader term "query" in the claims, the Court should reject e-Vision's attempt to limit the claims to requests spoken in the form of a question.

Second, e-Vision would require that the query be not only "verbal" (i.e., in the form of words) but also "oral" (i.e., spoken aloud). e-Vision's construction repeats the claim term *verbal*, demonstrating e-Vision seeks to rewrite *verbal* as "verbal *and* oral."

V. CONCLUSION

The Court should hold e-Vision to the applicants' definitions and other representations and adopt Luxottica's proposed constructions.

Respectfully submitted,

KNOBBE, MARTENS, OLSON & BEAR, LLP

August 30, 2024

/s/ *Mark Lezama*

Ali S. Razai
Mark Lezama
Justin J. Gillett
Brandon G. Smith

Attorneys for Defendants
LUXOTTICA GROUP S.P.A. and
LUXOTTICA OF AMERICA INC.

CERTIFICATE OF COMPLIANCE

The undersigned, counsel of record for Luxottica Group S.p.A. and Luxottica of America Inc., certifies that this brief complies with the page limit set by court order dated November 7, 2023 (Dkt. 27).

August 30, 2024 /s/ *Mark Lezama*
Mark Lezama