UNITED STATES PATENT AND TRADEMARK OFFICE

BEFORE THE PATENT TRIAL AND APPEAL BOARD

LUXOTTICA OF AMERICA INC.,

Petitioners

v.

E-VISION OPTICS, LLC

Patent Owner

Case No. IPR2024-01072
Patent No. 10,598,960

DECLARATION OF PROFESSOR JAMES H. OLIVER, Ph.D.
IN SUPPORT OF PATENT OWNER'S RESPONSE

TABLE OF CONTENTS

I. QUALIFICATIONS 2

II. UNDERSTANDING OF RELEVANT LEGAL PRINCIPLES 8

III. The ’960 Patent 11

A. Summary Of The ’960 Patent 11

B. Claim Construction 14

C. Level Of Ordinary Skill In The Art 14

IV. OVERVIEW OF PRIOR ART 15

A. Overview Of Jannard-740 15

B. Overview Of Chen 17

C. Overview Of Rosenblatt 18

D. Overview of Gunaratne 21

E. Overview of Nielsen 22

V. None OF PETITIONER’S PROPOSED COMBINATIONS RENDERs OBVIOUS CHALLENGED CLAIMS 11-26 24

A. Claims 11-18, 20-24 and 26 (Grounds 4 and 7) 25

1. Ground 4: The Combination Does Not Render Claim 11 and Dependent Claims 12-18, 20-21 Obvious Because a POSITA Would Not Have Been Motivated to Combine Jannard-740 with Rosenblatt 26

2. Ground 4: The Combination Does Not Render Claim 22 and Dependent Claims 23-24 and 26 Obvious Because a POSITA Would Not Have Been Motivated to Combine Jannard-740 with Rosenblatt 36

3. Ground 7: The Combination Does Not Render Claim 11 Obvious Because a POSITA Would Not Have Been Motivated to Combine Chen with Rosenblatt 38

4. Ground 7: The Combination Fails to Disclose Claim 11 limitation "an application module mechanically coupled to the eyewear frame, the application module including a wireless chip to communicate with a wireless enabled device".....41

5. Ground 7: The Combination Does Not Render Claim 22 and Dependent Claims 23-24 and 26 Obvious Because a POSITA Would Not Have Been Motivated to Combine Chen with Rosenblatt.....43

6. Ground 7: The Combination Fails to Disclose Claim 22 limitation "an application module mechanically coupled to the eyewear the application module comprising a transmitter and a wireless chip to wirelessly transmit a password from the application module from a wearer of the eyewear to a computer to access the computer".....43

7. Grounds 4 and 7: The Combination Fails to Disclose Claim 24's limitation "wherein the wireless enabled device is configured to adjust a brightness and/or a volume of the computer" 44

B. Claim 19 (Grounds 5 and 8).....44

C. Claim 25 (Grounds 6 and 9).....49

VI. CONCLUSION.....51

EXHIBIT LIST

Exhibit	Description
2001	*eVision Optics, LLC and Vision Smart Optics, Inc. v. Luxottica Group S.P.A. and Luxottica of America Inc.,* Case No. 8:23-cv-02013 AB (SHK) Order Denying Defendants' Motion to Stay, Dkt. 75 (Aug. 21, 2024 C.D. Cal.)
2002	*eVision Optics, LLC and Vision Smart Optics, Inc. v. Luxottica Group S.P.A. and Luxottica of America Inc.,* Case No. 8:23-cv-02013 AB (SHK) Order Re Civil Jury/Court Trial, Dkt. 54 (April 4, 2024 C.D. Cal.)
2003	*eVision Optics, LLC and Vision Smart Optics, Inc. v. Luxottica Group S.P.A. and Luxottica of America Inc.,* Case No. 8:23-cv-02013 AB (SHK) Order Scheduling Additional Dates and Correcting Scheduling Order, Dkt. 58 (April 18, 2024 C.D. Cal.)
2004	*Ltd., et al.,* Case No. 8:23-cv-01860 AB (SHK) Defendants' Preliminary Invalidity Contentions (July 19, 2024 C.D. Cal.) (excerpted)
2005	*eVision Optics, LLC and Vision Smart Optics, Inc. v. Luxottica Group S.P.A. and Luxottica of America Inc.,* Case No. 8:23-cv-02013 AB (SHK) Defendants' Invalidity Contentions (July 12, 2024 C.D. Cal.)
2006	*eVision Optics, LLC and e-Vision Smart Optics, Inc. v. Lenovo Group, Ltd. et al..,* Case No. 8:23-cv-01860-AB-SHK, Order re Civil Jury/Court Trial, Dkt. 54 (April 3, 2024 C.D. Cal.)
2007	Lex Machina – Federal Court – Federal District Court Cases in C.D. Cal, Pending Between 2019-09-01 and 2024-09-19
2008	Vacancies in the Federal Judiciary 118th Congress, last updated on 9/23/2024, https://www.uscourts.gov/judges-judgeships/judicial-vacancies/current-judicial-vacancies
2009	*eVision Optics, LLC and e-Vision Smart Optics, Inc. v. Lenovo Group, Ltd. et al..,* Case No. 8:23-cv-01860-AB-SHK, Order Granting Joint Stipulation to Schedule Additional Dates, Dkt. 56 (April 18, 2024 C.D. Cal.)
2010	*eVision Optics, LLC and Vision Smart Optics, Inc. v. Luxottica Group S.P.A. and Luxottica of America Inc.,* Case No. 8:23-cv-02013 AB (SHK) (IN CHAMBERS) Order Continuing Claim Construction Hearing, Dkt. 97 (Oct. 7, 2024 C.D. Cal.)

Exhibit	Description
2011	*eVision Optics, LLC and e-Vision Smart Optics, Inc. v. Lenovo Group, Ltd. et al..,* Case No. 8:23-cv-01860-AB-SHK, (IN CHAMBERS) Order Continuing Claim Construction Hearing, Dkt. 74 (Oct. 7, 2024 C.D. Cal.)
2012	*E-Vision Optics LLC v. Lenovo,* 8:23-cv-01860, Dkt. 78, Order Granting Joint Stipulation to Modify Order re: Civil Jury/Court Trial (Dkt. No. 54) and Order Granting Joint Stipulation to Schedule Additional Dates (Dkt. No. 56)
2013	*eVision Optics, LLC and Vision Smart Optics, Inc. v. Luxottica Group S.P.A. and Luxottica of America Inc.,* Case No. 8:23-cv-02013 AB (SHK), Luxottica's Opening Claim-Construction Brief
2014	Declaration of Professor James H. Oliver, Ph.D
2015	*Curriculum Vitae* of Professor James H. Oliver, Ph.D.
EX-2016	https://www.ti.com/design-resources/design-tools-simulation/models-simulators/pcb-thermal-calculator.html
EX-2017	A Figure of Merit for Smart Phone Thermal Management
EX-2018	https://www.gsmarena.com/samsung_i9300_galaxy_s_iii-4238.php
EX-2019	https://www.gsmarena.com/apple_iphone_4-3275.php
EX-2020	https://gizmodo.com/the-most-important-laptops-of-2012-5967988
EX-2021	https://dl.dell.com/manuals/all-products/esuprt_laptop/esuprt_xps_laptop/xps-12-l221x_reference%20guide_en-us.pdf
EX-2022	https://opticstown.com/what-is-a-good-weight-for-glasses/
EX-2023	Khalil, Elias, "Application of Phase Change Materials in Textiles: A Review"
EX-2024	https://spinoff.nasa.gov/spinoff1997/ch6.html
EX-2025	Walsh, Glyn, "The weight of spectacle frames and the area of their nose pads"

I, Professor James H. Oliver, Ph.D., declare as follows:

1. I have been engaged by King & Spalding LLP on behalf of eVision Optics, LLC ("Patent Owner"), to provide this Declaration concerning the technical subject matter relevant to Petitioner Luxottica's petition for Inter Partes Review ("Petition") of U.S. Patent 10,598,960 ("'960 Patent").

2. I am over 18 years of age. I have personal knowledge of the facts stated in this Declaration and could testify competently to them if asked to do so.

3. I have reviewed and am familiar with the specification and the claims of the '960 patent. In general, I will cite to the specification of a United States patent using the following formats: (Exhibit No. Col.:Line Number(s)) or (Exhibit No. Paragraph Number(s)). For example, the citation (EX-1001 1:1–10) points to the '960 patent specification at column 1, lines 1–10. Also, for convenience, I use italics to denote limitations from the challenged claims.

4. All the opinions in this Declaration are based on the documents I reviewed and my knowledge and professional judgment. In forming the opinions expressed in this Declaration, I reviewed the Petition for *Inter Partes* Review of U.S. Patent No. 10,598,960 and supporting exhibits.

5. I have been asked to provide my technical opinions regarding how a person of ordinary skill in the art would have understood the claims of the '960 patent at the time of the alleged invention. I have also been asked to provide my technical

opinions on how concepts in the ’960 patent specification relate to claim limitations of the ’960 patent. In reaching the opinions provided herein, I have considered the ’960 patent, its prosecution history, and the references cited above and have drawn as appropriate on my own education, training, research, knowledge, and personal and professional experience.

6. I am being compensated at my standard rate of $500 per hour for my time, plus reasonable out-of-pocket expenses. I have received no additional compensation for my work in this litigation, and my compensation does not depend upon the contents of this report, any testimony that I may provide, or the ultimate outcome of this litigation.

I. QUALIFICATIONS

7. In formulating my opinions, I have relied on my knowledge, training, and experience in the relevant filed, which I will summarize briefly. A more detailed summary of my background, experience, and publications is set forth in my curriculum vitae (CV), which is submitted as Exhibit 2002.

8. I currently hold the rank of University Professor and serve as the Pithan Director of Innovation at Iowa State University. For more than forty years, I have studied, worked in, and taught mechanical engineering, computer graphics, software development, and human-computer interaction, as well as virtual and augmented reality.

9. I received a Bachelor of Science in Mechanical Engineering degree from Union College in Schenectady, New York in 1979. My earliest engineering experience exposed me to advanced analysis of dynamic mechanical systems. While working at Mechanical Technology Inc., I conducted computational analyses of operating rotor-bearing systems, including critical speed, unbalanced response, and stability in both torsional and lateral machine dynamics. This experience led to a graduate fellowship at Michigan State University in East Lansing, Michigan, where my Master's thesis focused on harmonizing computational modal analysis (i.e., vibrational characteristics) of mechanical systems with equivalent experimental results. In 1981, I received a Master of Science degree in Mechanical Engineering from Michigan State University. In 1986, I received a Ph.D. in Mechanical Engineering, also from Michigan State University.

10. I have taught at different universities as a professor in Mechanical Engineering, Electrical and Computer Engineering, and Aerospace Engineering. Starting in August 1988 until August 1991, I was an Assistant Professor in the Department of Mechanical and Aerospace Engineering at the State University of New York at Buffalo, New York. I have also held various professor positions at Iowa State University, including Assistant Professor in the Department of Mechanical Engineering starting in August 1991, before becoming an Associate Professor in April 1993. I held that position until July 2000, and eventually returned

to the same position in September of 2001, before being promoted to the rank of Professor in April 2004. In August 2012, I became a University Professor, an honorary title acknowledging lasting impact on the entire university. In addition to teaching as part of the Department of Mechanical Engineering at Iowa State University, I have received courtesy appointments to the Department of Aerospace Engineering since March 2005; the Department of Electrical and Computer Engineering since June 2005; and the Department of Industrial and Manufacturing Systems Engineering since May 2007—appointments which I still hold. From May 2010 to July 2011, I was a Visiting Professor at Image Institute in the Ecole Nationale Supérieur d'Arts et Métiers, ParisTech in Chalon-sur-Saône, France.

11. Over my career, I have taught numerous other university courses, including "Mechanical Systems Design;" "Virtual Environments, Virtual Worlds and Applications"; Computer Graphics and Geometric Modeling; "Computer-Aided Design Applications;" and "Computer-Integrated Manufacturing." For example, I co-developed the content for the introductory design course, ME 270 Introduction to Mechanical Engineering Design. Referred to as our "cornerstone" design course, ME 270 is intended to provide students with context for the in-depth analysis-intensive courses they encounter later in our curriculum. It provides a broad introduction to contemporary mechanical design practice, while incorporating technical modeling and analysis techniques drawn from the basic physics and

calculus courses that students have completed to that point in their overall curriculum. Specific course topics include market evaluation, customer requirements, ideation, conceptual design, mathematical modeling and analysis, business case development, detail design, prototype fabrication, prototype testing, resolving analysis predictions with test results, cost analysis, and final product proposal. At the senior undergraduate level, I teach ME 415 Mechanical Systems Design. This course is referred to as our "capstone" design course because it draws from all of the student's experience gained through the core curriculum to provide an integrative, culminating, and in-depth product design experience. Design challenges for this course are typically solicited from regional industry partners. Students often work in close collaboration with industry colleagues on design problems with actual market impact. Many of the projects focus on electro-mechanical systems.

12. In addition to teaching at Iowa State University, I have also been involved in the University's research and development efforts. I have served as an Associate Director from April 1993 to July 1997 at the Iowa Center for Emerging Manufacturing Technology (later renamed as the Virtual Reality Applications Center), where I assisted in building a world-renowned research center for applied virtual reality. In fall 2003 I was named director of the Virtual Reality Applications Center and fostered its continued growth until July 2019. Under my leadership the

Virtual Reality Applications Center's ongoing contract research has increased from $9M to $20M, and faculty involvement has broadened to encompass colleagues from all Iowa State University colleges. From 2005 to 2007, I led fundraising, technical specification, bid process, and vendor management for a $5M upgrade of our flagship device, the C6—now the world's highest resolution immersive VR facility—and in 2008 led an $800K upgrade of Lee Liu Auditorium in Howe Hall, making it the world's highest resolution stereoscopic immersive theater.

13. I have also had extensive experience in the software industry, including as Director, Senior Director, and Vice President of Product Development for various companies. From April 1987 to August 1988, I was a Software Research Engineer at International TechneGroup, Inc., where I conducted software research and development and provided engineering consulting. From 1997-2001, I took a leave from my university position to work in the software industry. I joined Engineering Animation Inc. to lead their core technology team, focused on CAD-independent, large model visualization to facilitate virtual product prototyping. In 1999, I conceptualized, planned, and led development of e-Vis, the first commercial software product to combine high-performance product visualization with secure Internet-based collaboration capabilities to empower distributed product development and supply chain integration. After several corporate acquisitions,

these technologies are now referred to as TeamCenter Visualization, part of the Siemens PLM Software tool suite, and are used by manufacturers around the world.

14. In 2007, I co-founded BodyViz, a high technology startup focused on low cost, easy-to-use medical visualization with sales in the medical, education, veterinary, and legal markets. BodyViz delivers access to real human anatomy by creating easy to use, interactive 3D MRI and CT scan experiences. BodyViz won the Prometheus Award for "Start up Company of the Year" from the Technology Association of Iowa in 2008, and also won first place in the John Pappajohn Iowa Business Plan Competition in 2009.

15. I have received financial support for my research programs from several federal sources, including the National Science Foundation, NASA, and the research branches of the Navy, Air Force, and Army. Industry sponsors of my research include John Deere, Rockwell Collins, and Boeing. I have received numerous professional honors and awards, including the Gustus L. Larson Memorial Award from the American Society of Mechanical Engineering, recognizing early career achievement, and the National Science Foundation's prestigious Young Investigator Award. I served six years as Associate Editor of the ASME Transactions, Journal of Computing and Information Science in Engineering. I am a Fellow of the American Society of Mechanical Engineering. I have been a member of the Institute of Electrical and Electronics Engineers since 1983, and the Association for

Computing Machinery since 2010. I was also elected Fellow of the American Society of Mechanical Engineers in 2006. I hold four US patents on innovations in mechanical design and manufacturing as well as virtual reality.

II. UNDERSTANDING OF RELEVANT LEGAL PRINCIPLES

16. I am not a lawyer, and I will not provide any legal opinions. Although I am not a lawyer, I have been advised that technical experts apply certain legal standards when they form opinions about the meaning and validity of patent claims.

17. I understand the claims, not a patent's disclosure, define the scope of the patented inventions. I further understand a patent may include two types of claims, independent claims and dependent claims. An independent claim stands alone and includes only the limitations it recites. A dependent claim can depend from an independent claim. A dependent claim can also depend from another dependent claim.

18. I also understand certain claims are "comprising" claims. I am informed that this means that the claim encompasses all the elements listed, but that other additional, unnamed elements may also be present.

19. I understand that a patent claim is invalid if it is anticipated or obvious in view of the prior art, and that a claim can be unpatentable even if all of the requirements of the claim cannot be found in a single prior-art reference. I further understand that invalidity of a claim requires that the claim be anticipated or obvious

from the perspective of a person of ordinary skill in the art at the time the invention was made.

20. I have been informed that a patent claim is invalid if it would have been obvious to a person of ordinary skill in the art. In analyzing the obviousness of a claim, I understand the following factors may be taken into account: (1) the scope and content of the prior art; (2) the differences between the prior art and the claims; (3) the level of ordinary skill in the art; and (4) any so called "secondary considerations" of nonobviousness if they are present.

21. I have been informed that a claim can be obvious in light of a single prior art reference or multiple prior art references. I understand that to prove that prior art or a combination of prior art renders a patent obvious, it is necessary to:

1) Identify the particular references that, singly or in combination, make the patent obvious;
2) Specifically identify which elements of the patent claim appear in each of the asserted references; and
3) Explain why a person of ordinary skill in the art would have combined the references, and how they would have done so, to create the inventions claimed in the patent. I further understand that exemplary rationales that may support a conclusion of obviousness include:

- Combining prior art elements according to known methods to yield predictable results;
- Simple substitution of a known element for another to obtain predictable results;
- Use of known technique(s) to improve similar devices (methods or products) in the same way;
- Applying a known technique to a known device (method or product) ready for improvement to yield predictable results;
- Choosing from a finite number of identified, predictable solutions with a reasonable expectation of success, which I am informed is the "obvious to try" standard;
- Known work in one field of endeavor may prompt variations of the work for use in either the same field or a different field based on design incentives or other market forces if the variations are predicable to a person of ordinary skill in the art; and
- Some teaching, suggestion, or motivation in the prior art that would have led a person of ordinary skill in the art to modify the prior art reference or to combine the prior art reference teachings to arrive at the claimed invention.

22. I have been informed that, in considering obviousness, hindsight reasoning derived from the patent at issue may not be used.

III. THE ’960 PATENT

A. Summary Of The ’960 Patent

23. I note that the ’960 Patent presents a succinct summary of the state of the art at the time of its invention: “commercial eyewear comprising electronics [were] limited to one application in addition to the conventional eyeglass lenses housed within said eyewear.” (EX-1001, 1:24-26). I concur with that statement. Typically, eyewear with embedded electronics would focus on a single function, such as “commercially available electronic focusing eyeglasses, commercially available eyeglasses with a built in MP3 player, commercially available eyeglasses with video for occupation purposes, and soon there are expected to be commercially available eyeglasses with a built in camera.” (*Id*., 1:26-32). I further note that, at the time of the invention of the ’960 Patent, designs of eyewear embedding electronic devices, namely single-application electronic devices struggled to be acceptable to wearers because they struggled to avoid causing discomfort or inelegance due to bulkiness of the electronic components and their limited application. I therefore agree with the description in the ’960 Patent that there was “a need for a single pair of fashionable eyewear capable of […] utilizing one or more of a multitude of different application devices while the wearer is wearing the eyewear. (*Id*., 1:59-62.)

24. To answer that need, the ’960 Patent provides innovative electronic modules and docking stations for eyewear. For example, the patent claims eyewear featuring “application modules” that “can each fit together with the docking station and may be utilized one or more at a time while the eyewear is being worn by a wearer.” (*Id*., 1:5-7.) I view such modularity as providing several benefits when designing electronic modules for eyewear. One such benefit is, as stated in the ’960 Patent, that an “application module may include one or more of an electronic device configured to perform a function.” Another beneficial aspect is that placing and connecting such application modules can be facilitated by “an attachment mechanism configured to secure the application module to the docking station in a substantially fixed position; and/or a plurality of preconfigured application connection points.” An application module can package discrete, individual functions of the eyewear such as “audio playback, audio recording, acoustic amplification, acoustic canceling, hearing aid, video playback, video recording, photography, fall detection, alertness monitoring, pedometer, geo-location, pulse detector, wireless communication, virtual reality, augmented reality, gaming, eye tracking, pupil monitoring, lens control, automated reminder, lighting, lasing, and alarm.” Using multiple application modules, the eyewear may, for example, enable some application modules to handle user commands and provide controls while

others provide other functions, such as augmented reality, gaming, or sending sound to external audio systems. (*Id*., 13:9-37.)

25. As described in the ’960 Patent, two or more application modules can be joined to enhance eyewear with several functions. (*Id*., 4:47-50.) Application modules, such as exemplary embodiments 226 and 236 in each temple of the eyewear shown in Figure 3, below, allow eyewear to field advanced electronic functions in a compact and therefore more comfortable manner

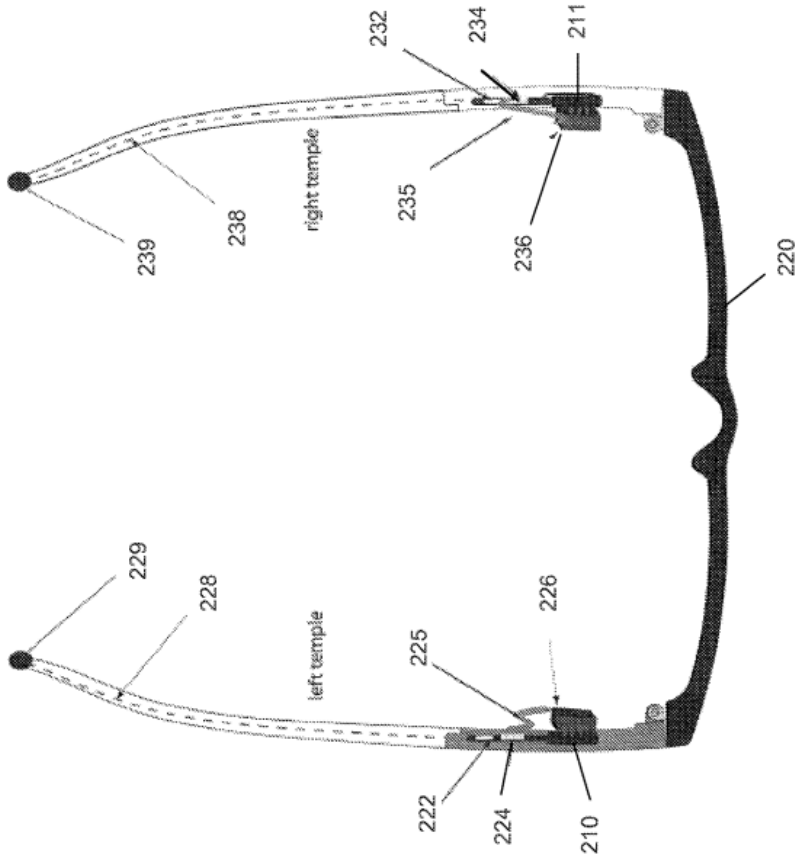

FIG. 3

B. Claim Construction

26. Petitioner does not construe any claim terms in its petition and states that "no claim terms require construction to resolve the obviousness challenges here." Petition, at 11.

C. Level Of Ordinary Skill In The Art

27. I understand that certain issues relating to the validity of the '960 patent must be judged from the perspective of a person of ordinary skill in the relevant art, as I discuss below. I have been asked to define the level of a "person having ordinary skill in the art" or "POSITA" that someone would have had at the time the alleged invention as claimed was made. In deciding the level of ordinary skill, I have considered the following factors, which I have been informed are relevant in determining the level of ordinary skill in the art:

- The levels of education and experience of persons working in the field;
- The types of problems encountered in the art;
- The prior art solutions to these problems;
- The rapidity with which innovations are made; and
- The sophistication of the technology.

28. A POSITA at the time of the invention of the '960 patent would have a Bachelor's degree in mechanical engineering, electrical engineering, computer engineering, or equivalent degree and, in addition, approximately two years of work

experience with embedded electronic devices. More advanced degrees or training in a related discipline or both can compensate for shorter work experience.

29. I understand that Petitioner has defined the level of ordinary skill in the art as:

> The ’960 patent relates to electronic eyewear. Ex.1001, 1:66-2:4. Based on the relevant factors, In re GPAC Inc., 57 F.3d 1573, 1579 (Fed. Cir. 1995), a hypothetical person of ordinary skill in the art (“POSITA”) would have had at least a bachelor’s degree in mechanical or manufacturing engineering; mechatronics; electrical engineering plus coursework in mechanical engineering, manufacturing engineering, or mechatronics; or a similar technical degree. Ex.1003, ¶¶1-48. A POSITA would have also had at least 2 years of experience designing eyewear and/or consumer electronics. *Id*., ¶28. Work experience could substitute for formal education and additional formal education could substitute for work experience. *Id*.

(Petition, 10.)

30. My opinions as expressed in this Declaration would be the same when viewed under either party’s definition of the level of ordinary skill in the art. The minor variations between them are immaterial.

31. Based on either standard, I was at least a person of ordinary skill in the art at the time of the invention of the ’960 patent.

IV. OVERVIEW OF PRIOR ART

A. Overview Of Jannard-740

32. Jannard-740 is “directed to wearable audio devices, and in particular, devices that humans can wear on their heads and that include electronics such as, for example, speakers, microphones, processors, transmitters, receivers, video display

technology, and/or interface electronics for interacting with a wireless network and/or providing content to a user." (EX-1005, [0003]). Jannard-740 states that head-mounted devices may comprise electronics that "can be used for portable entertainment, personal communications, and the like" and "in conjunction with" devices such as "cellular telephones, cordless telephones, radios, tape players, MP3 players, portable video systems, handheld computers and laptop computers." (*Id*.,[0005]).

33. Jannard-740 describes "a dual speaker eyewear system" with an "electronics module [that] is supported by the eyeglass and in electrical communication with each of the first and second speakers" dedicated to the eyewear's audio speaker functionality, which "may include an MP3 format memory, a radio frequency receiver, a radio frequency transmitter, a cellular telephone, video display technology, or other electronic devices." (*Id*., [0010]-[0011]).

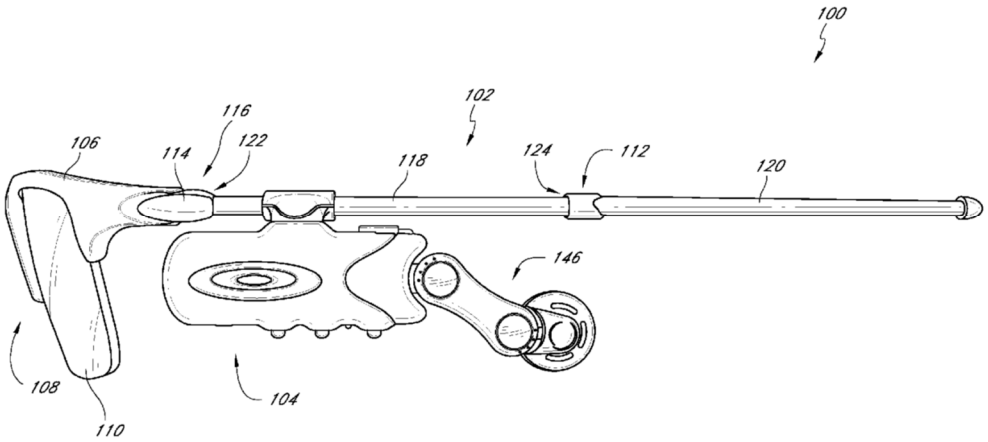

B. Overview Of Chen

34. Chen is directed to "an eyewear temple assembly that provides the flexibility to add thermal regulation to eyewear in an integrated and concealed manner." (EX-1010, Abstract). Chen states that "the present invention relates to prior works of art that provide thermal regulation of the head." (*Id*., 1:20-22). According to Chen, the function of its invention addresses the needs of: "eyewear users, like athletes or construction workers, [who] live and work in harsh thermal conditions, such as summers and winters in the Southwest. For example, heat exhaustion, which includes important symptoms such as dizziness, nausea, and headaches, often occurs above an internal body temperature of 40° C. (104°F). […] consequently, regulating head temperature is important. An elegant solution would be to have protective eyewear with additional thermal regulation capabilities." (*Id*., 1:16-30).

35. In that regard, Chen discloses the use of heating or cooling removable cartridges that can be placed in eyewear temples to deliver the desired thermal regulation ("[s]pecifically, the invention being presented is an eyewear temple assembly comprised of exchangeable cartridges, which can provide thermal regulation of a user's head"). (*Id*., 2:49-52.) An example cartridge 4 and its compartment 7 is shown in Figure 1, below.

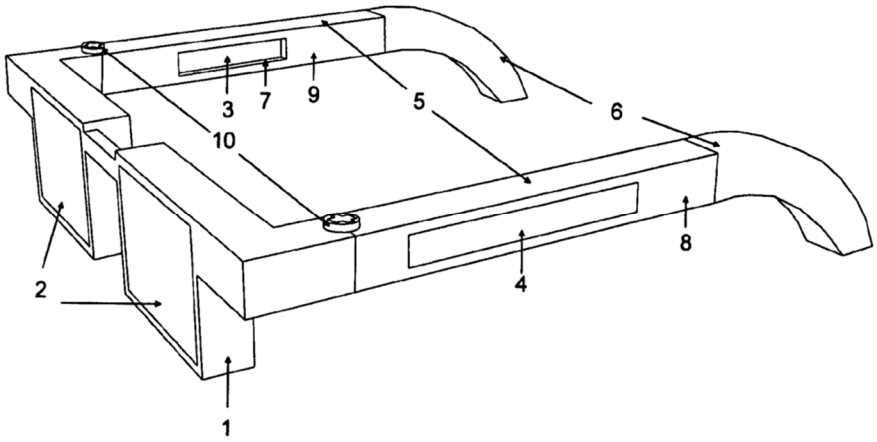

FIG. 1

C. Overview Of Rosenblatt

36. Rosenblatt describes "a system for remotely directing a host device to perform an operation using a key." (EX-1007, Abstract.) For instance, it describes host devices as including, on the one hand, "light or light Switch, curtains or shades, an elevator, a conveyer belt, a motorized device, or any other device or system that may be moved from at least a first to a second position or state." (*Id*., [0033].) On the other hand, host devices can be embodied in personal computers to allow a user to "access personalized settings or information." (*Id*., [0032]: "host device 120 or other device 130 may include a computer, a workstation, a cellular telephone, a mobile communications device, a personal media device, a set-top box, a television system, or any other suitable electronic device").

37. I note that there are significant differences in what Rosenblatt describes as "keys," notably, there are important differences in their abilities, size, and

complexity of their electronic circuits. From a POSITA's perspective, Rosenblatt's keys fall into two general categories: one category includes Rosenblatt's embodiments of a credit card, a surgical implant, a garment clip, a "coin-sized object", and car keys. (*Id*., [0007], [0043]). The other category embodies "keys" in cell phones, personal digital assistants and laptop computer, (*Ibid*.) Figure 5, for example, shows Rosenblatt's host device as a computer 560 for which "a key may be integrated in any of key fob 520, object with clip 530 (e.g., a clip configured to be attached to an article of clothing or accessory), mobile telephone 540, and personal media device 550 using any suitable approach." (*Id*., [0059]).

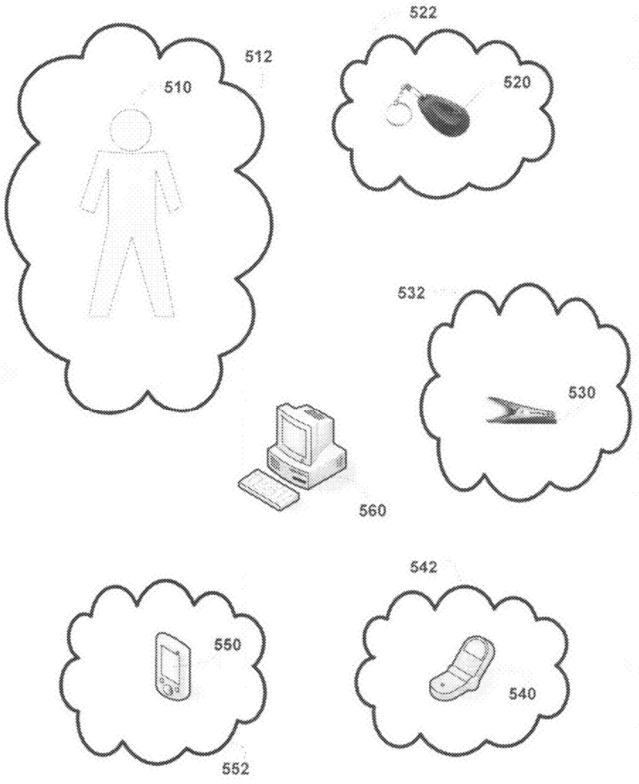

FIG. 5

38. Rosenblatt distinguishes keys embodied in computers and cell phones by calling out their advanced computing and networking capabilities. For instance, it discloses that in some embodiments, "key 200 may include a power supply, a user interface, and a display. Key 200 may also include a processor distinct from communications circuitry 202." (*Id*., [0041]). Additionally, the key may comprise "memory [which] may be configured to store data by communication circuitry" within the key. (*Id*., [0037]). Key memory may serve to "host a database of the host devices to which key 200 was paired" and "store instructions that key 200 can transmit to cause each host device to perform one or more operations." (*Id*., [0038]). See also, *id*., Fig. 2.

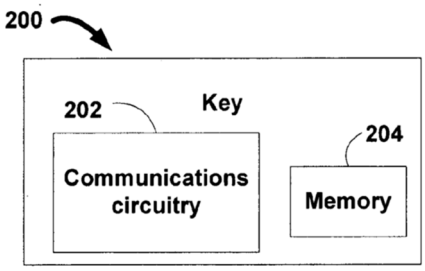

FIG. 2

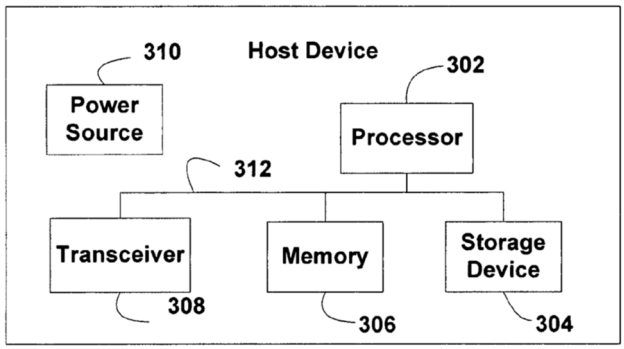

FIG. 3

D. Overview of Gunaratne

39. Gunaratne "relates to a system for detecting drowsiness in a machine operator, and in particular, to a system having a facial action database with a plurality of stored high priority sleepiness facial actions that are used for rapidly detecting drowsiness in a machine operator." (EX-1008, [0001]). Gunaratne discloses a "system and a process for detecting drowsiness in an individual operating a machine. The system includes an image acquisition module that can electronically capture a plurality of facial images of the individual." (*Id*., [0004]). To detect machine-operator drowsiness, Gunaratne's system implements a software "face localization module" which analyzes captured images of operators' faces and uses them to generate "face mesh grids" and identify the boundaries of facial features such as the eyes and mouth. (*Id*., [0004], [0019]). The orientation of the analyzed facial features is then compared with the images stored in a "facial action database" to determine a probability that the face shows signs of sleepiness. (*Id*., [0022]-[0031]). Figure 10 shows a flowchart of Gunaratne's software process for acquiring and analyzing facial imagery to assess a probability of sleepiness as well as the severity of the sleepiness evidenced by the facial data.

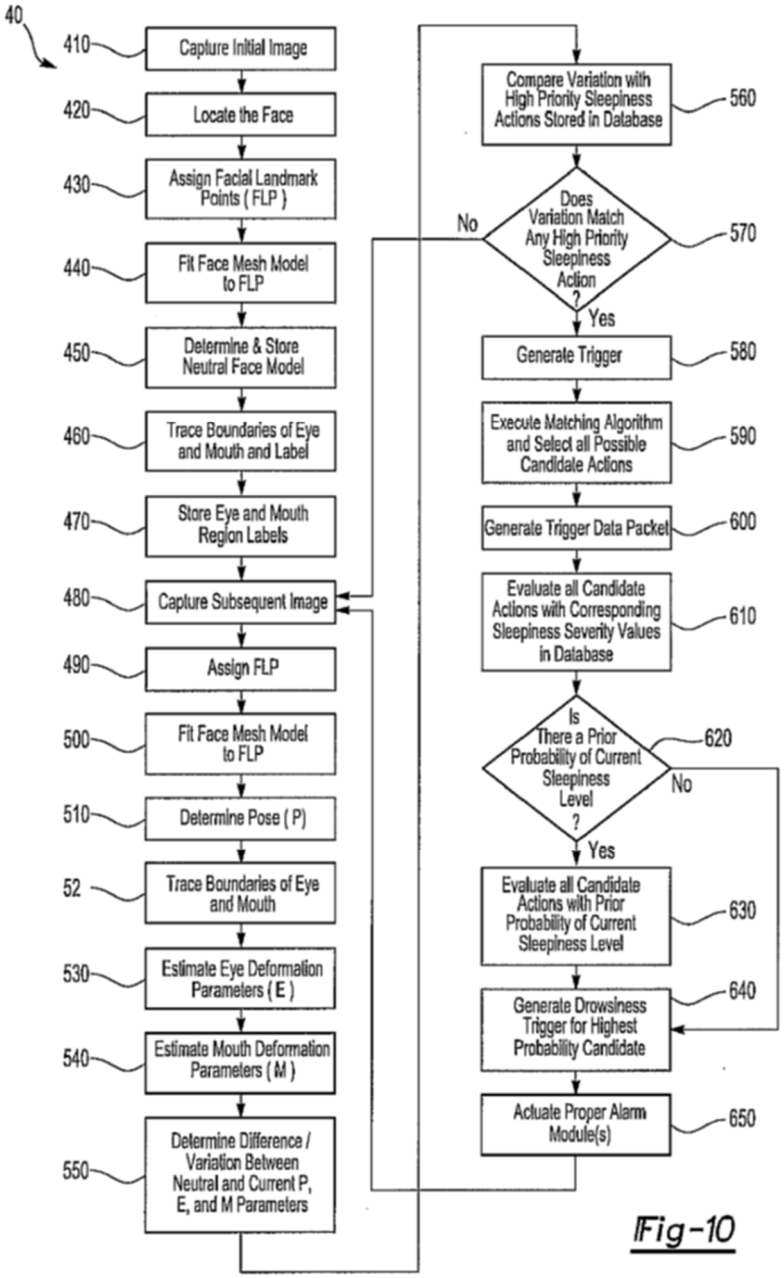

Fig-10

E. Overview of Nielsen

40. Nielsen "relates to information retrieval, and more particularly to adaptively changing the font size with which information retrieved over a network is dis-played" (EX-1009,1:9-12). Nielsen discloses "apparatus, systems, methods and computer program products which allow for an adaptive User Interface within a

network browser that will utilize information gathered over time to display retrieved pages with font sizes that are desired by the user, even if that user has not visited a particular page before" (id., 1:66-2:4). Nielsen teaches that network browsers, such as web browsers, can be configured to "to record font size changes in a database and after a certain number of changes to the same font size for a particular page are recorded, the user is asked if this is the preferred font size" or "to infer from previous font size preference settings made by the user, the appropriate font size to use when accessing a related [web] page for the first time" (id., 2:7-20). Figure 3A provides an example of Nielsen's tracking changes to the font size on several websites and Figure 4 is a flowchart of Nielsen's database of font size preferences for a set of webpages and its use to apply the preferred font size when browsing the web page.

302 303 304

URL	FONT SIZE	DATE & TIME CHANGED
www.nasa.gov	12	4/10/97
www.nasa.gov	10	4/11/97
www.gmu.edu/catalog/page 1	11	5/10/97
–	–	–
–	–	–

FIG. 3A

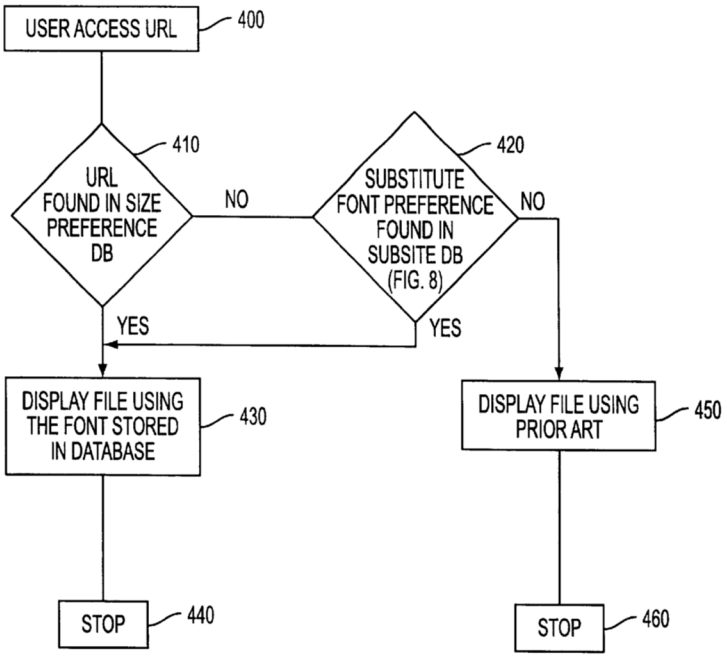

FIG. 4

V. NONE OF PETITIONER'S PROPOSED COMBINATIONS RENDERS OBVIOUS CHALLENGED CLAIMS 11-26

41. The petition and the expert declaration appended to the petition' contend that claims 11-26 of the '960 patent are invalid because they are obvious over the combination of references set out below:

Claim Number	Grounds
11-18, 20-24, 26	**Ground 4**: obvious in view of the combination of Jannard-740 and Rosenblatt **Ground 7**: Obvious in view of the combination of Chen and Rosenblatt
19	**Ground 5**: obvious in view of the combination of Jannard-740, Rosenblatt and Gunaratne **Ground 8**: Obvious in view of the combination of Chen, Rosenblatt and Gunaratne
25	**Ground 6**: obvious in view of the combination of Jannard-740, Rosenblatt and Nielsen

	Ground 9: Obvious in view of the combination of Chen, Rosenblatt and Nielsen

42. I disagree with the arguments in the Petition and the opinions set forth by Dr. Feland for the reasons that I discuss in further detail below. It is my opinion that Claims 11-26 are patentable over the grounds Petitioner has relied on.

A. Claims 11-18, 20-24 and 26 (Grounds 4 and 7)

43. Claim 11 is an independent claim that recites:

> Eyewear comprising:
> an eyewear frame having a first temple and a second temple; and
> an application module mechanically coupled to the eyewear frame, the application module including a wireless chip to communicate with a wireless enabled device,
> wherein the wireless enabled device is configured to recognize a presence of a wearer of the eyewear based at least in part on communication with the wireless chip.

44. Claims 12-21 are dependent claims of Claim 11 (Claim 19 is addressed in section V.B below.)

45. Claim 22 is an independent claim that recites:

> Eyewear comprising:
> an eyewear frame having a first temple and a second temple;
> an application module mechanically coupled to the eyewear the application module comprising a transmitter and a wireless chip to wirelessly transmit a password from the application module

from a wearer of the eyewear to a computer to access the computer.

46. Claims 23-26 are dependent claims of Claim 11 (Claim 25 is addressed in section V.C below.)

47. Petitioner relies on two grounds to challenge independent Claims 11 and 22 and dependent Claims 12-18, 20-21, 23-24 and 26: Ground 4 (alleging obviousness in view of the combination of Jannard-740 and Rosenblatt) and Ground 7 (alleging obviousness in view of the combination of Chen and Rosenblatt). In both grounds, a POSITA would have viewed the combination as inoperable because the teachings of Rosenblatt relied on would result in excessive size, weight and power requirements to implement them in the confines of Jannard-740 or Chen eyewear. I discuss each ground separately, below.

1. Ground 4: The Combination Does Not Render Claim 11 and Dependent Claims 12-18, 20-21 Obvious Because a POSITA Would Not Have Been Motivated to Combine Jannard-740 with Rosenblatt

48. When analyzing Rosenblatt, a POSITA would have understood that there are several distinct types of "keys" in the disclosures of Rosenblatt, as mentioned above in section IV.C, which fall into two categories. A first category of keys is implemented in very small devices, for instance "garment clips," "car keys," and implants "surgically inserted under a user's skin." (EX-1007, [0007], [0030], [0044]). A POSITA would expect devices in this category to be limited in size,

weight, and power consumption. I would estimate the expected size of devices such as car keys and garment clips to be less than about a cubic inch in volume (i.e., less than about an inch in length, height and width, with additional length compensated by less width or height, for example). Implantable devices are typically much smaller, and I estimate a POSITA to consider that devices inserted under skin to be less than half a cubic inch in volume (and often much smaller). Overall, the very small size of this category of device would limit the complexity of the electronic circuit a POSITA would have expected to implement at the time of the invention of the ’960 Patent in 2012.

49. Circuits such as radio-frequency identification (RFID) transponder tags and basic radio or infrared wireless remote controls, which generally form the basis for car key fobs, would have been suitable for inclusion in those devices. However, a POSITA would have known at the time that more advanced circuits, such as processors and memory needed to run programs, storage for data and programs (which can include memory, such as non-volatile memory, solid-state drives, etc.) and more advanced wireless transceiver (transmitter-receiver) chips (for instance, chips designed to use WiFi standards) would not fit in such rudimentary devices. In relation to wireless transceivers, I note that Rosenblatt describes a type of key that “creates personal area networks.” (*Id*., [0057]). The ability to create personal area networks, such as “WiFi hotspots” and “ad hoc networks” is a feature of wireless

transceivers, including WiFi and Bluetooth chipsets used in desktops, laptop computers, tablets and smartphones. Although Rosenblatt includes a "key fob" and a "clip" alongside "mobile telephone" and "personal media device" as devices "harbor[ing] a key that creates personal area networks," it is my opinion that a POSITA would have recognized that car key fobs and garment clips were not capable of housing and powering wireless transceivers capable of creating personal area networks, in contrast with cell phones and personal media devices that may contain wireless transceivers with that capability.

50. In addition to their size, processor, memory, storage and/or wireless transceiver components would contribute significant mass, which I would estimate at 20-50 grams for each chip. I estimate that this would make a typical system comprising processor, memory, storage, wireless transceiver, power circuitry and battery weigh about at least 100 grams, and in many cases significantly more. Moreover, those components would require more power than simpler RFID circuits and additional space would be needed for the power management integrated circuit (PMIC) or equivalent power circuitry and for an onboard battery large enough to supply the required power. As a result, a POSITA would view this first category of Rosenblatt keys as limited to very simple circuitry and incapable of encompassing processor, memory, storage, wireless transceivers, and the battery and power circuitry needed to power them. So, although the minimal Rosenblatt key can be

incorporated into tiny devices, in order to meet the limitations of the ’960 Patent’s claims it would need the advanced components described above which a POSITA would recognize as infeasible in eyewear given the space and power constraints of implementing in eyeglass frames.

51. Another category of Rosenblatt keys is embodied in larger, more powerful devices, as such keys are “incorporated in an electronic device, for example in a cellular telephone, a mobile communications device, a pocket-sized personal computer (e.g., an iPAQ or a Palm Pilot) a personal media device (e.g., an iPod), a camera, a video recorder, a computer (e.g., a laptop computer).” (Ex-1007, [0007].). In my opinion, a POSITA would have recognized that this category of keys is implemented in devices (for instance, laptop computers and smartphones) that contain processors, memory, storage, wireless transceivers, and batteries and power circuitry to power them. A POSITA would have understood that such devices are, accordingly, considerably larger than eyewear. I estimate that such devices would typically weigh, at the minimum, about 100 to 140 grams (with devices such as laptops weighing much more, typically between 1 and 3 kilograms).

52. Rosenblatt confirms that this category of key is embodied in a computer or a cell phone with similar functionality to a computer. For instance, Rosenblatt states that such keys include “a power supply, a user interface and a display.” (EX-1007, [0041].) A POSITA would have understood that by featuring a user interface and a

display, Rosenblatt is referring to a device that includes processor, memory and storage that runs an operating system program that includes the user interface, and that displays and power supplies are components of portable computers (e.g. laptops, personal digital assistants, tablets). Similarly, Rosenblatt states that keys may "include a processor distinct from communications circuitry 202." (*Id*., [0041].) Such a processor indicates to a POSITA that the device embodies a small computer or a cell phone that includes computer components (processor, memory, storage) in addition to a wireless transceiver, at the very least.

53. Rosenblatt further describes keys as featuring memory that can "host a database of the host devices to which key 200 was paired" and "store instructions that key 200 can transmit to cause each host device to perform one or more operations." A POSITA would have understood that hosting a database requires the key to function as a computer with, again, the requisite hardware (processor, memory, storage) and software, notably an operating system on which database programs would run. In contrast, the smaller category of keys described in Rosenblatt, embodied in devices such as car keys and garment clips, lacks such hardware and software and is therefore incapable of hosting databases.

54. A further consideration for a POSITA is that the hardware components (processor, memory, storage and wireless transceiver) needed for Rosenblatt keys implemented in cellphones or computers would be joined together on a printed

circuit board and enclosed in a case, which would add to their size and weight. Furthermore, electronic components give off heat during operation, and a POSITA must accordingly design the placement and enclosure for the hardware components to dissipate heat using passive (e.g., heatsinks, heat pipes) and/or active (e.g., fans) cooling solutions. The need for effective heat dissipation is accentuated when embedding electronics in small spaces as the heat increases as the size of the electronics shrinks. (See, e.g., Texas Instruments' thermal calculator for simulated printed circuit boards, which reflects this relationship. (EX-2016\). Moreover, Heat dissipation is of particular importance when designing electronic circuits that can come into contact with human skin, such as in an eyewear frame. A POSITA would have designed the cooling solution to enforce a 45-degree Celsius skin limit temperature to avoid user discomfort or injury when touching exterior surfaces of the device. (*See* EX-2017, 2). As a result, a POSITA would have expected the selected cooling solution to add to the weight and size of the eyewear electronics, further differentiating the category of Rosenblatt keys implemented in computers and cell phones with similar functionality from the category of Rosenblatt keys in very small devices (car keys, garment clips) with limited wireless electronics circuitry.

55. The Rosenblatt keys embodied in computers and cell phones would require significantly larger dimensions than car keys and garment clips, as a result of the

size of the electronic components (processor, memory, storage and wireless transceiver), the cooling solution to safely dissipate heat from those components, and the battery and power circuitry to supply electricity to the components. In my opinion, a good approximation of the typical minimum weight and size for such devices at the time of the invention of the ’960 Patent can be derived from the specifications of leading smartphones on sale in 2012. For example, the Samsung Galaxy S III cell phone on sale in 2012 weighed about 133 grams and measured 5.38 x 2.78 x 0.34 inches (a volume of about 5.09 cubic inches.) (EX-2018). As another example, the Apple iPhone 4 on sale in 2012 weighed about 137 grams and measured 4.54 x 2.31 x 0.37 inches (about 3.88 cubic inches.) (EX-2019). I consider it likely that a POSITA reading Rosenblatt would have similar dimensions in mind when assessing the minimum requirements for its cell phone key embodiments. That said, I also account for the possibility that a POSITA would take a ‘barebones’ approach to the design of Rosenblatt’s cell phone keys and omit components not explicitly required by Rosenblatt, such as a cell phone’s display, input digitizer, cell network radio, speakers and microphones. I estimate that this would reduce the minimum size and weight of the device by about 20 percent (as the bulk of the weight lies in the battery, case, cooling solution, printed circuit boards and remaining chips), resulting in expected minimal volume of 3 to 4 cubic inches and minimal weight of about 100 grams. Keys embodied in laptops and other computers would have been expected to

be much larger, as many laptops measured over half a cubic foot in volume and weighed more than 1.5 kilograms at the time of the invention. By way of an example, one of the reportedly best-selling laptops of 2012, the Dell XPS 12, weighed about 1.53 kilograms and measured 12.49 x 8.48 x 0.79 inches, which amounts to about 0.58 cubic feet. (EX-2020; EX-2021).

56. As a result, a POSITA's expectations for the minimum size and weight of Rosenblatt's keys with computer hardware and software capabilities (or similar functionality in a cellphone) would have been a volume of about at least 3-4 cubic inches and weight of about at least 100 grams. In contrast, I consider that a POSITA would have understood that the heaviest prescription eyewear typically weighs between 50 and 70 grams (counting the frame and lenses). (*See*, e.g., EX-2022; EX-2025 "The weight of spectacle frames and the area of their nose pads"). The added weight of implementing this category of Rosenblatt key in eyewear would have been understood to more than double or even triple the total weight of even the heaviest prescription eyewear, which would have been viewed by a POSITA as excessive and prone to discomfort and potential injury. The volume and heat dissipation added by this category of Rosenblatt key, discussed above, would have been understood to raise further issues of wearer safety and comfort, as the electronic components would require active or passive dissipation of the heat they generate during operation but such heat dissipation could cause uncomfortable or even dangerous hotspots on the

wearer's head. I note that neither Rosenblatt nor Jannard-740 provide any teachings that would assist a POSITA in altering the design of such keys to fit comfortably in a user's eyewear and does not explain how to address the problems a POSITA would face due to the keys' excessive weight, size and heat dissipation. In my view, a POSITA would therefore not enjoy a reasonable chance of success in implementing the Rosenblatt keys with computer functionality capable of performing the claim 11 limitation of communicating wirelessly with wireless-enabled devices "configured to recognize a presence of a wearer of the eyewear based at least in part on communication with the wireless chip" in Jannard-740 eyewear.

57. I have reviewed the petition and the declaration of Dr. Feland and I note that they allege that eyewear such as those in Jannard-740 and Chen are a "suitable device in which to incorporate Rosenblatt's key or its functionality," in line with Rosenblatt's disclosure of placing a "key" in a "headset," which, according to Petitioner, was supposed to motivate a POSITA to obtain the "benefit" of that combination (Petition, 47-48; EX-1003, ¶156; EX-1007, [0043].) I disagree for at least the reasons set out above regarding Rosenblatt's disclosure of two categories of keys: a category including embodiments with limited size and power, such as in car key fobs and garment clips, which a POSITA would have known to be suitable for only rudimentary wireless communications; and another category of keys embodied in computers (such as laptops) and cell phones with similar functionality

to computers. A POSITA would have understood that those are different devices with different capabilities and components, but Petitioner and Dr. Feland do not address those differences or discuss the conditions under which a type of Rosenblatt key would be suitable for embedding in eyewear. As I have explained above, only the second category of Rosenblatt keys has the capabilities the petition and Dr. Feland's declaration attribute to Rosenblatt keys as a whole, due to its computer functionality and, accordingly, its inclusion of hardware computer components processor, memory, storage and wireless transceiver alongside the cooling solutions to dissipate the heat those components give off and the power circuitry and batteries to power them. But to a POSITA the excessive size, weight and power of those computer components would have rendered eyewear unsuitable for such Rosenblatt keys (as discussed above.)

58. I also note Petitioner's and Dr. Feland's allegation that the combination of Jannard-740 and Rosenblatt would "represent nothing more than the simple addition" of "known elements" and the "use of a known technique" to "improve a similar device" yielding "predictable results" (Petition, 47-48; EX-1003, ¶156). I disagree. As I have explained above, a combination of Rosenblatt and Jannard-740 would not have been a "simple addition" because a POSITA would have known that adding the computer components required in the relevant Rosenblatt keys to eyewear would have made the eyewear too heavy and large, as well as created a difficult

problem of dissipating the heat from its power consumption. Rosenblatt does not teach a POSITA how to resolve those problems. To a POSITA, there is not a known technique to reliably address the shortcomings of Rosenblatt when aiming to insert its keys in eyewear and ensure the eyewear performs wireless control and authentication techniques such as those of claim 11 of the ’960 Patent and its dependent claims. Instead of yielding predictable results, a POSITA’s attempt at combining Rosenblatt with Jannard-740 would not be likely to succeed.

2. Ground 4: The Combination Does Not Render Claim 22 and Dependent Claims 23-24 and 26 Obvious Because a POSITA Would Not Have Been Motivated to Combine Jannard-740 with Rosenblatt

59. I note that Petitioner’s and Dr. Feland’s arguments regarding Claim 22 refer back to their sections on Claim 11 and that they assert, in the same manner as for Claim 11 that a “key” disclosed in Rosenblatt can be added to the eyewear of Jannard-740 to perform the limitation “to wirelessly transmit a password from the application module from a wearer of the eyewear to a computer to access the computer,” thereby allegedly rendering Claim 22 and its dependents obvious. (See petition, 57-59; EX-1003, ¶¶196-203.) I disagree because a POSITA would not have been motivated to combine those references, as the proposed combination of Rosenblatt’s key in Jannard-740’s eyewear would have been inoperable for the reasons discussed above regarding Claim 11. In summary, Rosenblatt keys capable of embodying an “application module” pursuant to this limitation of Claim 22,

including performing a wireless transmission "of a password from a wearer of the eyewear to a computer to access the computer" would require the hardware components (processor, memory, storage and wireless transceiver) and the software running on the hardware to receive, store and transmit the password. As such, only the Rosenblatt "keys" embodied in a computer or a cell phone with computer functionality would be capable of performing the limitation, and such keys would not, at the time of the invention, have been viewed by a POSITA as suitable for embedding in eyewear due to their excessive size, weight and power requirements.

60. Furthermore, I note that the petition and Dr. Feland's declaration reference passages of Rosenblatt that describe a key that provides "authentication information" to a computer and enables a user to "provide login data to the key for transmission to [the] computer" (EX-1007, [0061], [0095]). These disclosures in Rosenblatt confirm that the key would have the capability to receive and store password information, then process and transmit it to a designated computer. A POSITA would have understood that this further implies that such a key would comprise computer hardware components and software and would, accordingly, not fit in eyewear.

3. Ground 7: The Combination Does Not Render Claim 11 Obvious Because a POSITA Would Not Have Been Motivated to Combine Chen with Rosenblatt

61. In ground 7 of the petition, Petitioner and Dr. Feland assert that the "key" disclosed in Rosenblatt could also be added to the eyewear disclosed in Chen, in the same manner as they assert a key could be added to the eyewear of Jannard-740 in ground 4. I have explained above, in section V.A.1, that a POSITA would not have been motivated to combine Rosenblatt and Jannard-740. The same is true of ground 7's proposed combination of Rosenblatt and Chen. In both cases, a POSITA would have understood that the only category of Rosenblatt keys capable of performing the claim limitations would require computer functionality and therefore include hardware computer components (processor, memory, storage and wireless transceiver, cooling solutions to dissipate the heat from those components' power consumption, and batteries and power circuitry to supply the power). A POSITA would have further understood that those components would render the Rosenblatt key too large and heavy to fit in eyewear such as Chen. The power consumption of the Rosenblatt key would also have been excessive, both insofar as supplying the power would require a battery that contributes to the excessive size and weight of the device, and insofar as the associated heat would need to be dissipated in an effective and safe manner (e.g., avoiding reaching the skin limit temperature, see EX-[Electronics Cooling Article], 2; and ¶54 above). A POSITA would have noted

that the issues related to power consumption and heat dissipation would raise additional problems when considering Chen instead of Jannard-740 because Chen discloses that its invention "is an eyewear temple assembly comprised of exchangeable cartridges, which can provide thermal regulation of a user's head." A POSITA would have struggled to understand how to both safely dissipate the heat generated by Rosenblatt's key and provide the thermal regulation (in other words, the desired heating or cooling effect) sought by Chen.

62. In addition to the combination of Rosenblatt and Chen being inoperable, it is unlikely a POSITA would have contemplated a combination of Chen and Rosenblatt to achieve the inventions of the '960 Patent given that Chen does not offer any meaningful discussion pertaining to the field of electronics embedded in eyewear. As noted above in sections III and IV, Chen is directed to eyewear containing thermally regulating removable cartridges, and the '960 Patent is directed to eyewear with electronic application modules capable of wireless interaction with other devices. The '960 Patent pertains to the field of wearable embedded electronics, namely "commercial eyewear comprising electronics" (EX-1001, 1:24-25.) More specifically, the '960 Patent is directed to "electronic eyewear modules and systems to be worn by a wearer." (*Id*., 1:66-67.) The disclosure and claims of the '960 Patent focus on the function and design of electronic modules that fit in eyewear, notably the invention of "application modules" whose embodiments "may

include one or more of an electronic device configured to perform a function." (*Id*., 2:22-23.) The subject matter of the '960 Patent contrasts sharply with that of Chen, which "present[s] an eyewear temple assembly that provides the flexibility to add thermal regulation to eyewear in an integrated and concealed manner" (EX-1010, Abstract). That thermal regulation is applied via the eyewear temples' "exchangeable cartridges, which can provide thermal regulation of a user's head." (*Id.,* 2:49-52.) Chen's description of its "field of the invention" further states that "the present invention relates to prior works of art that provide thermal regulation of the head." (*Id.,* 1:20-22.) I consider that a POSITA would have understood Chen to be relevant to the design of thermally regulated clothing (i.e., cooling or heating garments), such as cooling hats and headbands, which typically use materials with heating or cooling attributes (such as phase-changing materials, see, e.g. EX-2023; EX-2024, rather than electronics to achieve the desired heating or cooling effect.

63. I note that Petitioner and Dr. Feland state that Chen "discloses eyewear with wireless communication circuitry." (Petition, 64.; EX-1003 ¶224.) I disagree, as Chen does not feature any embodiments of eyewear with wireless communication circuitry or discuss the design of such circuitry. The only reference in Chen to wireless communication circuitry is a mention of a different patent as part of the "background" section to Chen's invention of thermally regulating eyewear, stating that "[e]yewear with integrated electronic components have also been described

recently" in a different patent pertaining to "a Bluetooth component being integrally embedded into the temple." (EX-1010, 1:63-2:5.) A POSITA would not have considered this to mean that Chen disclosed eyewear with wireless communication circuitry, because it is a reference to a different patent and Chen never provides an example or description of any electronic components (including wireless communication circuitry) in its specification, claims, or drawings. Chen's only mention of electronic components is limited to a statement that: "[t]he removable cartridge comprises of [sic] materials and components, including electronic or non-electronic or any combination thereof, which will provide functions such as thermal regulation." (*Id*., 2:60-63.) Chen's lack of disclosure of any design for electronic modules in eyewear would have left a POSITA without any guidance as to how to configure Chen's eyewear in combination with Rosenblatt's wireless communication techniques. A POSITA would therefore have lacked any reasonable chance of succeeding in such a combination.

4. Ground 7: The Combination Fails to Disclose Claim 11 limitation "an application module mechanically coupled to the eyewear frame, the application module including a wireless chip to communicate with a wireless enabled device"

64. In addition to lacking a motivation to combine references as explained above, ground 7's combination of Chen and Rosenblatt fails to disclose the limitations of claim 11: "an application module mechanically coupled to the eyewear frame, the application module including a wireless chip to communicate with a

wireless enabled device." Petitioner and Dr. Feland assert that Chen's "cartridge is an application module, and Chen thus discloses an "application module" (petition, 67-70; EX-1003, ¶¶ 159-167) because Chen mentions that its thermally regulating cartridge can be "electronic or non-electronic or any combination thereof, *which will provide functions such as thermal regulation*" (EX-1007, 2:60-63) and permits "installment of cartridge(s) comprised of different, unique capabilities." (*Id*., 4:22-24.) To a POSITA, none of this teaches or suggests including an application module as disclosed in the '960 Patent, nor does it teach or suggest including a wireless chip in the application module to communicate with a wireless enabled device. Chen lacks any discussion of placing a wireless chip in its eyewear. I note that Petitioner and Dr. Feland also allege that Chen suggested an application module comprising a wireless chip because Chen's background section has one mention that an unrelated patent "describes a Bluetooth component being integrally embedded into the temple," as well as one statement that "as demonstrated by Sunglasses that provide music playing and cell phone capabilities, consumer interest is growing in augmented eyewear, which offers functionalities that go beyond the obvious features." (EX-1007, 1:28-32, 1:65-66; petition, 67-70; EX-1003, ¶¶159-167). I disagree because those brief background mentions would not have provided a POSITA with any examples, details or specifics of any designs for an electronic application module or a wireless chip, and they could not, therefore, have informed

or suggested to a POSITA their inclusion in Chen's eyewear. Moreover, a POSITA would have understood that Chen was directed to the design of eyewear featuring thermally regulating removable cartridges to heat or cool the user's head, which are not suggestive of implementing an electronics application module comprising a wireless chip.

5. Ground 7: The Combination Does Not Render Claim 22 and Dependent Claims 23-24 and 26 Obvious Because a POSITA Would Not Have Been Motivated to Combine Chen with Rosenblatt

65. I note that Petitioner and Dr. Feland's arguments for Claim 22 regarding the motivation to combine Chen and Rosenblatt refer to and reiterate their arguments regarding Claim 11. They fail with respect to Claim 22 for the same reasons as discussed above in section V.A.2.

6. Ground 7: The Combination Fails to Disclose Claim 22 limitation "an application module mechanically coupled to the eyewear the application module comprising a transmitter and a wireless chip to wirelessly transmit a password from the application module from a wearer of the eyewear to a computer to access the computer"

66. The combination of Chen and Rosenblatt is also deficient, because Chen fails to disclose the limitations of "an application module mechanically coupled to the eyewear the application module comprising a transmitter and a wireless chip to wirelessly transmit a password from the application module from a wearer of the eyewear to a computer to access the computer," for the same reasons discussed above (section V.5) in connection with Claim 11. I note that Petitioner and Dr.

Feland reprise the arguments they make for Claim 11 regarding Claim 12. They also fail regarding Claim 12 because Chen fails to provide a POSITA with any examples, details or specifics of any designs for an electronic application module, transmitter or wireless chip in its eyewear.

7. Grounds 4 and 7: The Combination Fails to Disclose Claim 24's limitation "wherein the wireless enabled device is configured to adjust a brightness and/or a volume of the computer"

67. Claim 24 recites:

> the "eyewear of claim 22, wherein the wireless enabled device is configured to adjust a brightness and/or a volume of the computer."

68. I note that the petition and Dr. Feland's declaration state that Rosenblatt discloses "adjusting a brightness or volume of the computer" pursuant to the claim limitation. However, Rosenblatt's disclosure refers instead to the possibility that a computer "may include a display" (EX-1007, [0051]-[0053]), without discussion of brightness or volume control in a computer. As a result, the combinations asserted in grounds 4 and 7 fail to disclose the limitations of Claim 24. (*See* petition, 59, 73; EX-1003, ¶¶ 207-209, 253.)

B. Claim 19 (Grounds 5 and 8)

69. Claim 19 recites:

The "eyewear of claim 16, wherein the wireless enabled device is configured to control a functionality of the automobile to awake the wearer should the wearer fall asleep."

70. As I explain above in sections V.A.1 and V.A.2 regarding independent claim 11, a POSITA would not have been motivated to combine Rosenblatt's applicable "key," i.e. a small computer or cell phone with equivalent functionality to a computer, with the eyewear of Jannard-740 or Chen. The size, weight and power constraints of such eyewear would have rendered that combination inoperable. In grounds 5 and 8, Petitioner and Dr. Feland allege that Claim 19 is obvious over a combination of Gunaratne, Rosenblatt and Jannard-740 or Chen (respectively). In my opinion, and in addition to the lack of motivation to combine Rosenblatt with Jannard-740 or Chen, a POSITA would not have been motivated to combine those references with Gunaratne, for several reasons.

71. First, a POSITA would have been unlikely to consider Gunaratne in the context of designing eyewear with embedded electronics as Gunaratne lacks any mention of eyewear, hardware, embedded electronics, or wireless communications. Instead, Gunaratne is directed to subject matter that is very different from Jannard-740's (eyewear with embedded audio system), Chen's (eyewear with heating/cooling cartridges) or Rosenblatt's (wireless communications between various electronic keys and a host device.) Gunaratne discloses techniques for

performing pattern recognition on images of the faces of individuals operating machinery and conducting data analysis in a database that manages a collection of images of the faces of drowsy individuals to assess, by comparison with the stored images, the likelihood that the machine operator is drowsy. If the software described in Gunaratne finds a sufficiently similar pattern of drowsiness in the operator's picture, it activates an alarm. (See EX-1008, Abstract, [0017]-[0031].) An example of a flowchart of Gunaratne's software is provided in Figure 10 and shows the complex data analysis steps required. In my opinion, this complexity, along with the need to configure and access large databases, would have dissuaded a POSITA to consider Gunaratne in the context of designing the eyewear application module and automobile wireless enabled device of Claim 19.

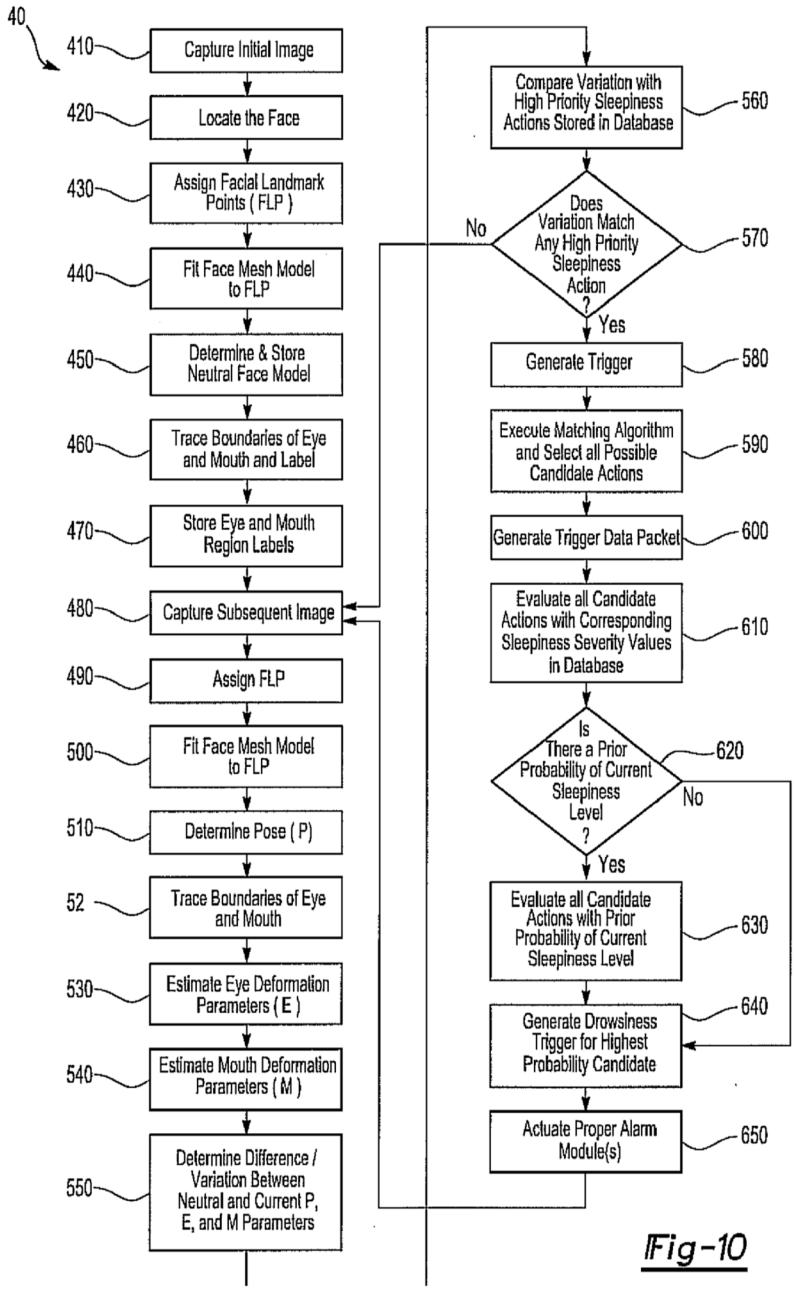

Fig-10

72. Implementing Gunaratne as part of an automobile wireless enabled device would have required an automobile computer that embodied the complex database structure and ran the image acquisition and recognition software of Gunaratne. But there is no guidance in Gunaratne, Jannard-740, Chen or Rosenblatt as to how to build such a wireless enabled device. Furthermore, there is no guidance as to how to

install a wireless enabled device configured with Gunaratne's database and data-analysis program within the constraints of an automobile. Similarly, the alleged combinations provide no information to a POSITA as to how such a device (assuming the POSITA could build it) would be "configured to recognize a presence of a wearer of the eyewear based at least in part on communication with the wireless chip" of an eyewear's electronic application module.

73. I note that the petition and Dr. Feland's declaration assert that a POSITA would have been motivated to combine Gunaratne with Jannard-740 or Chen and Rosenblatt because, allegedly, "Gunaratne suggests doing so" when it mentions rapid detection of driver drowsiness as improving driver, passenger, and bystander safety. (Petition, 61; EX-1003, ¶216.) I do not see how that passing mention of the safety benefits of avoiding driver drowsiness could have encouraged a POSITA to combine Gunaratne with references directed to very different subject matter (as stated above) or offered any guidance as to how to do so. I also note that Petitioner and Dr. Feland allege that the combination is the result of combining known techniques together and would be a "trivial" matter. That is not the case, as a POSITA would have no guidance from any of the references towards implementing Gunaratne's complex database system, data analysis program and facial recognition software in conjunction with Jannard-740's or Chen's eyewear or Rosenblatt's

wireless communication techniques. A POSITA would, as a result, not have a reasonable chance of succeeding in that combination.

C. Claim 25 (Grounds 6 and 9)

74. Claim 25 recites:

> The eyewear of claim 22, wherein the wireless enabled device is configured to adjust a font size of an application in the computer.

75. I have explained above, in sections V.A.1, V.A.2, V.A.3 and V.A.5 regarding independent Claims 11 and 22 that a POSITA would not have been motivated to combine Rosenblatt's "key," which in this case would require a small computer, with the eyewear of Jannard-740 or Chen. The size, power and weight constraints of such eyewear render that combination inoperable. A POSITA would also not have been motivated to add Nielsen as a further reference to the combination, for several reasons.

76. First, a POSITA would be unlikely to consider Nielsen's techniques for storing webpage font size preferences in a database and displaying fonts in the preferred size when accessing such webpages in the context of designing eyewear with embedded electronics. As such, a POSITA would be unlikely to consider a combination of Nielsen with the eyewear enhanced with an audio system, disclosed in Jannard-740, or equipped with thermally regulating cartridges, disclosed in Chen, and would lack a motivation to combine those references. Nielsen's subject matter

is very different from the other references cited by Petitioner. Nielsen discloses software relevant to web browsing techniques (adapting a font size on a given web page) and further comprising database management software (e.g., to manage a database recording the user's changes to a font size when browsing web pages.)

77. The subject matter of Nielsen would bear little to no relevance to a POSITA when considering Rosenblatt's techniques for wireless communications between an electronic "key" and a host device because Nielsen is directed to enhancements to the web browsing experience and does not discuss any wireless interactions between devices, such as between Rosenblatt's keys and host devices. Likewise, Rosenblatt lacks any disclosure on interfacing with web browsers that could teach or suggest a combination with Nielsen.

78. Second, the vast difference in subject matter and the lack of guidance in any of the reference would have left a POSITA without any reasonable chance of succeeding in combining the web-browsing system of Nielsen with the eyewear of Jannard-740 or Chen and the wireless communication techniques of Rosenblatt.

79. Third, I note that the petition and Dr. Feland's declaration allege that a POSITA would have been motivated to combine Nielsen because Nielsen "suggests doing so" by stating that adding Nielsen's techniques for adjusting font size on web pages to Rosenblatt would "realize the benefits disclosed in Nielsen." (Petition, 62; EX-1003, ¶222.). Petition further alleges that combination would be an assembly of

a "known" technique to improve a "known" device that would have been "trivial" to a POSITA. I disagree with those statements. As stated above, there would have been no reason for a POSITA to consider Nielsen in conjunction with Jannard-740, Chen or Rosenblatt given the difference in subject matter and, even if a POSITA considered them together somehow, there would be no teachings or suggestions in the references to provide a POSITA with a reasonable chance of success in combining them.

VI. CONCLUSION

80. For at least the foregoing reasons, it is my opinion that Petitioner's grounds do not render obvious claims 11-26 of the '960 Patent.

I hereby declare that all statements made herein of my own knowledge are true and that all statements made on information and belief are believed to be true; and further that these statements were made with the knowledge that willful false statements and the like so made are punishable by fine or imprisonment, or both, under Section 1001 of Title 18 of the United States Code.

Executed this 31st day of March, 2025 in Des Moines Iowa.

Respectfully submitted,

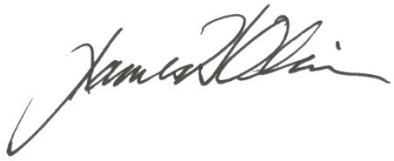

_____

James H. Oliver, Ph.D.