US005222168A

United States Patent [19]

Saito et al.

[11] Patent Number: 5,222,168

[45] Date of Patent: Jun. 22, 1993

[54] METHOD FOR STACKING FERRULES OF A STACKED-TYPE OPTICAL CONNECTOR AND A STACKED-TYPE OPTICAL CONNECTOR

[75] Inventors: **Masami Saito; Shinichiro Ohta; Hiroyuki Yamada; Etsuo Tanabe; Toshihiko Ohta**, all of Tokyo, Japan

[73] Assignee: **The Furukawa Electric Co., Ltd.**, Tokyo, Japan

[21] Appl. No.: **802,871**

[22] Filed: **Dec. 6, 1991**

[30] **Foreign Application Priority Data**

Dec. 13, 1990	[JP]	Japan	2-401965
Dec. 14, 1990	[JP]	Japan	2-402298
Dec. 21, 1990	[JP]	Japan	2-404973
Mar. 7, 1991	[JP]	Japan	3-41975

[51] **Int. Cl.**[5] **G02B 6/38**

[52] **U.S. Cl.** **385/59**; 156/158

[58] **Field of Search** 385/56-60; 156/158

[56] **References Cited**

U.S. PATENT DOCUMENTS

3,871,935	3/1975	Gloge et al.	156/158
3,920,309	11/1975	Garver	339/198 R
4,753,515	6/1988	Sato et al.	385/59
4,786,135	11/1988	Boero	385/59
4,789,218	12/1988	Paul et al.	385/59 X
4,943,136	7/1990	Popoff	385/24

FOREIGN PATENT DOCUMENTS

0323920	7/1989	European Pat. Off. .
2-297506	12/1991	Japan .

OTHER PUBLICATIONS

Patent Abstracts of Japan, vol. 15, No. 79 (P-1170) [4607] Feb., 1991.

Primary Examiner—Akm E. Ullah

Attorney, Agent, or Firm—Frishauf, Holtz, Goodman & Woodward

[57] **ABSTRACT**

A method for stacking ferrules of a stacked-type optical connector wherein stacking portions for stacking are provided in corresponding positions of each ferrule, the individual ferrules are stacked with the corresponding individual stacking portions aligned, and a plurality of ferrules are simultaneously stacked up with stacking members which work in cooperation with those corresponding stacking portions in such a manner that the ferrules can practically float with a specific degree of freedom to allow a gap between the ferrules, and a stacked-type optical connector assembled according to this method.

24 Claims, 15 Drawing Sheets

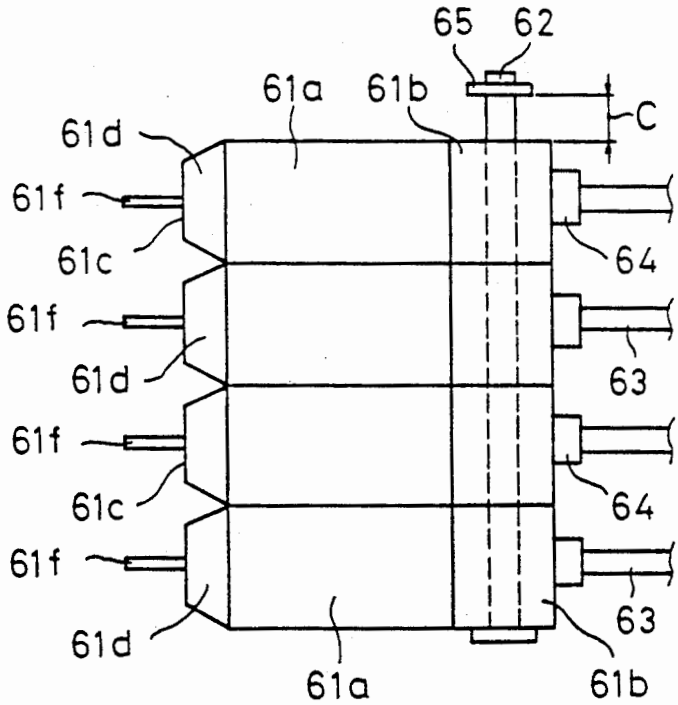

FIG. 1

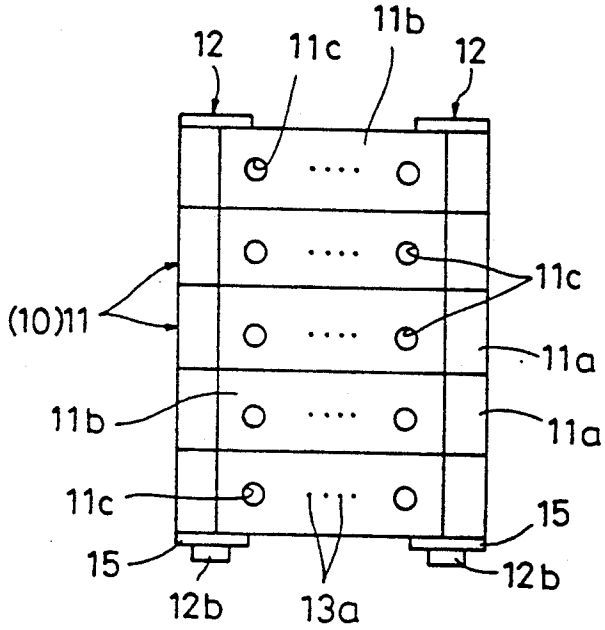
12
11c
11b
12
11c
(10)11
11a
11b
11a
11c
15
15
12b
12b
13a

FIG. 2

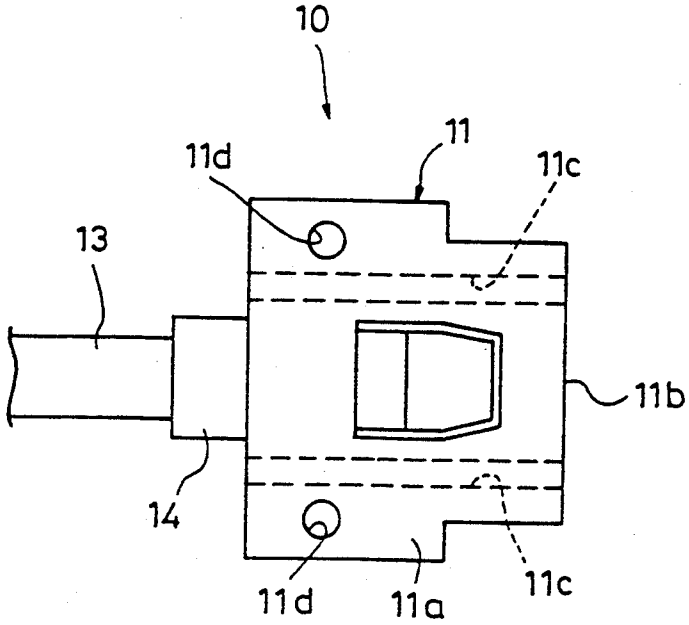
10
11
11d
11c
13
11b
14
11d
11a
11c

FIG. 3

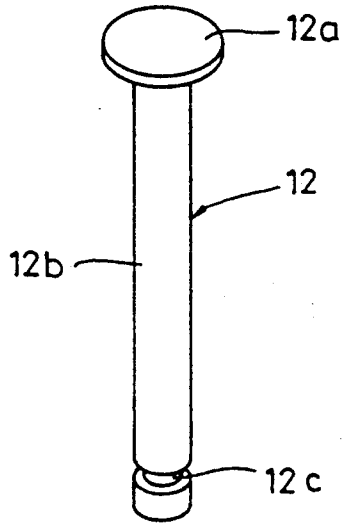

FIG. 4

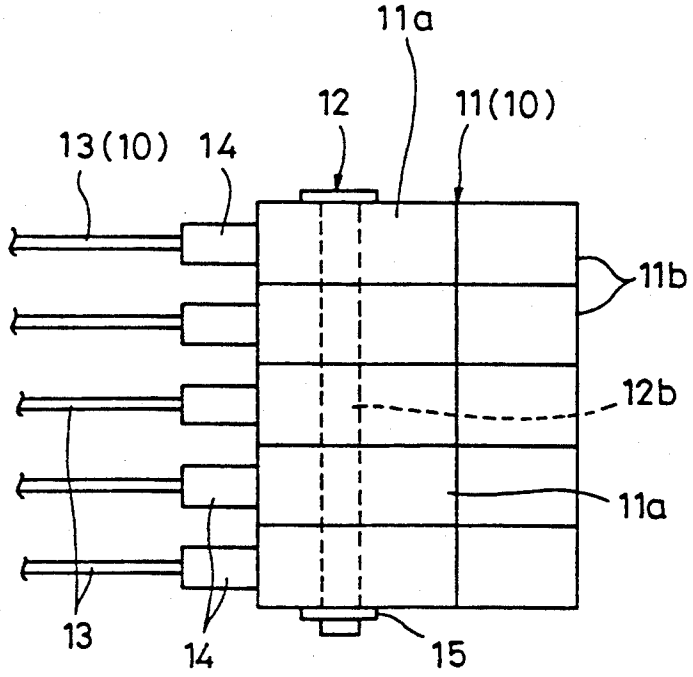

FIG. 5

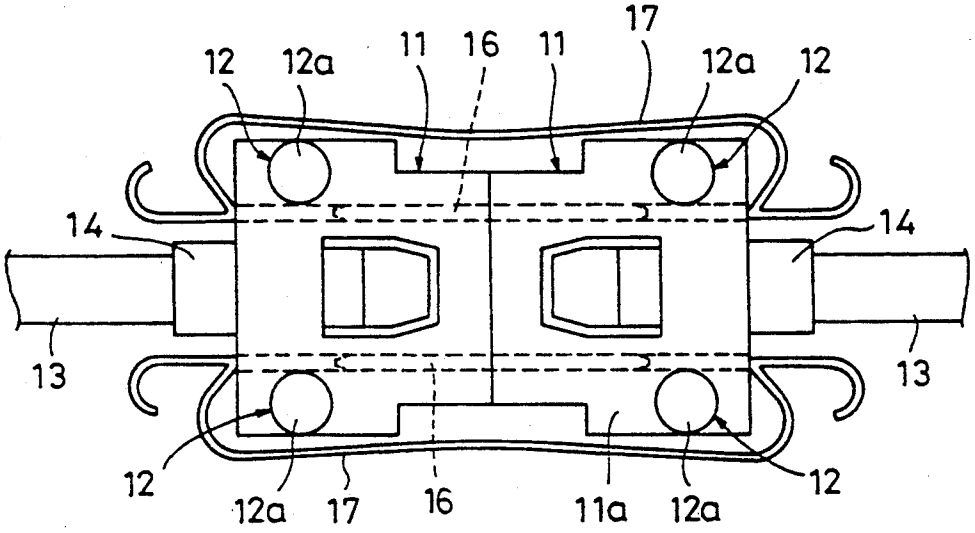
17
12
12a
11
16
11
12a
12
14
14
13
13
12
12a
17
16
11a
12a
12

FIG. 6

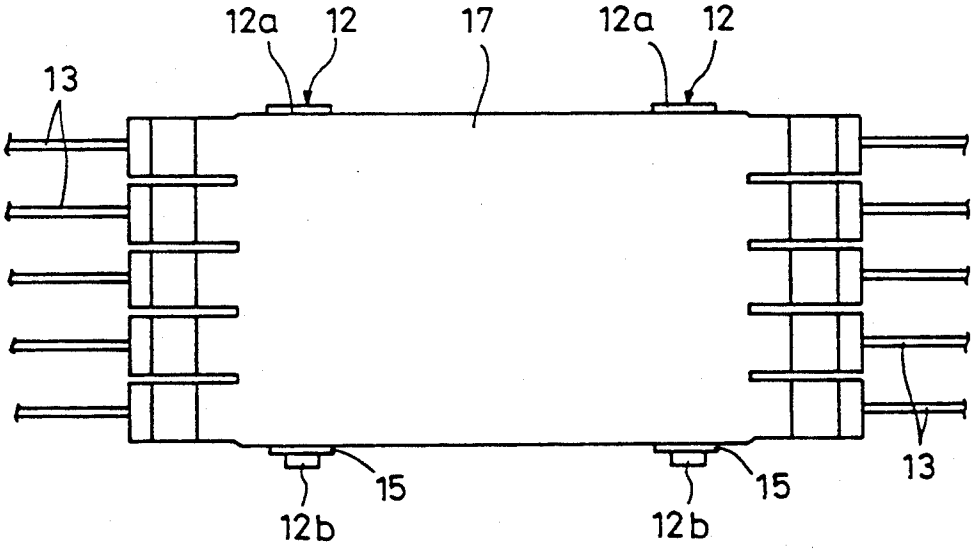
12a
12
17
12a
12
13
13
15
15
12b
12b

FIG. 7

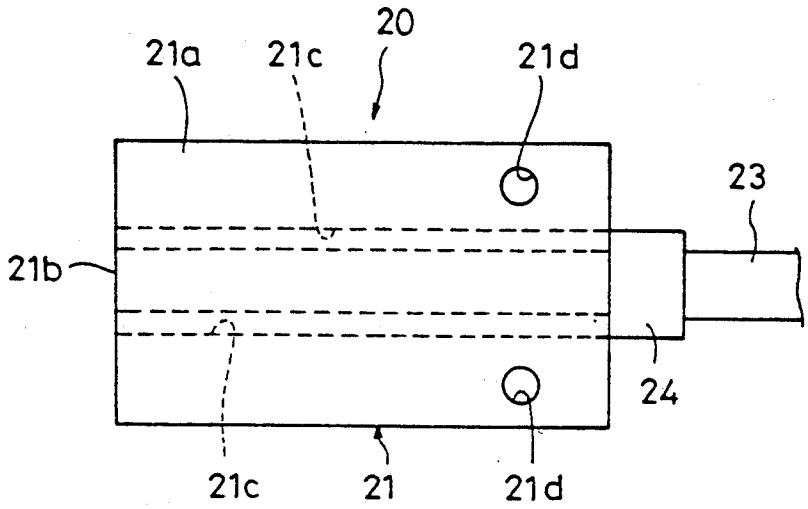

FIG. 8

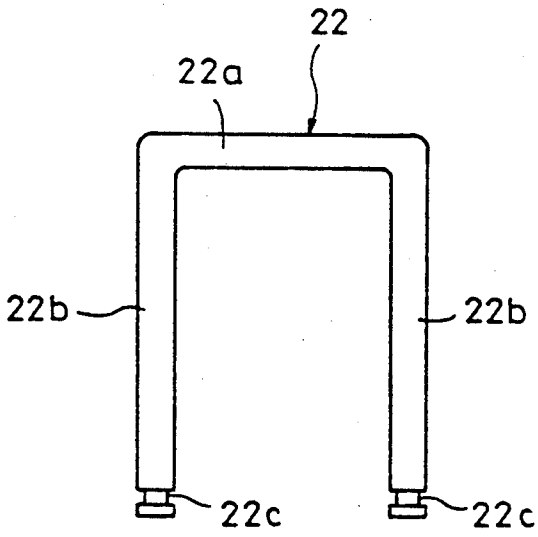

FIG. 9

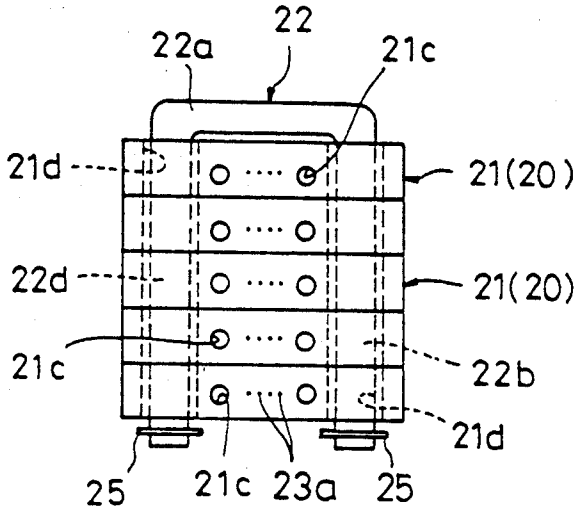
22
22a
21c
21d
21(20)
22d
21(20)
21c
22b
21d
25
21c
23a
25

FIG. 10

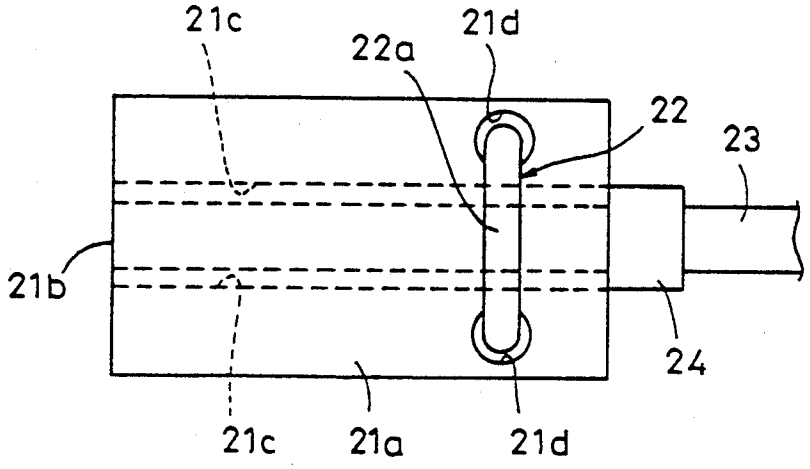
21c
21d
22a
22
23
21b
24
21c
21a
21d

FIG. 11

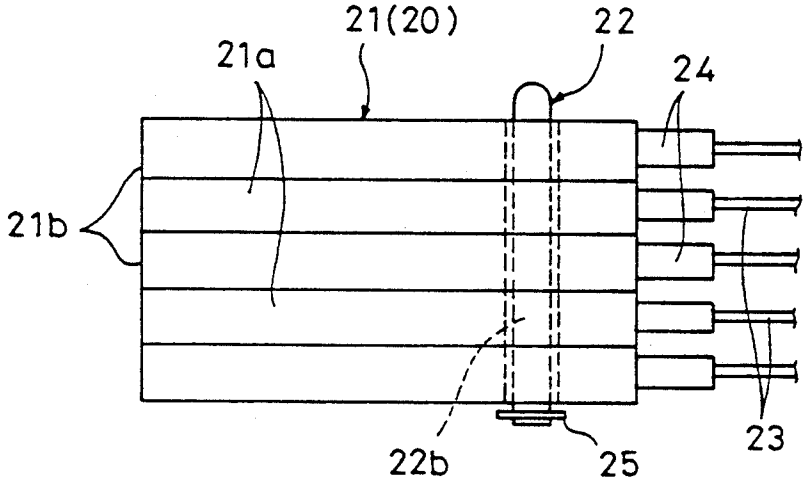

FIG. 12

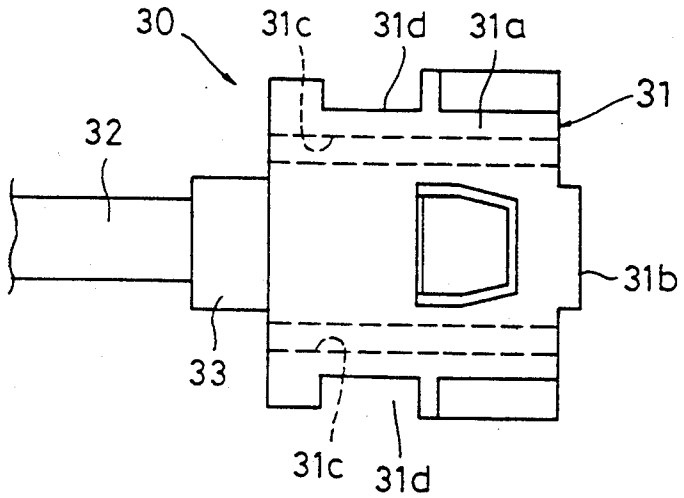

FIG. 13

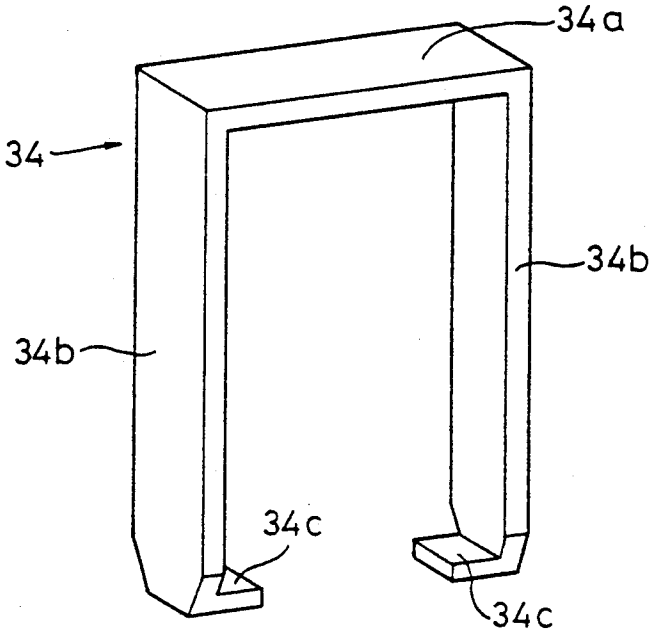

FIG. 14

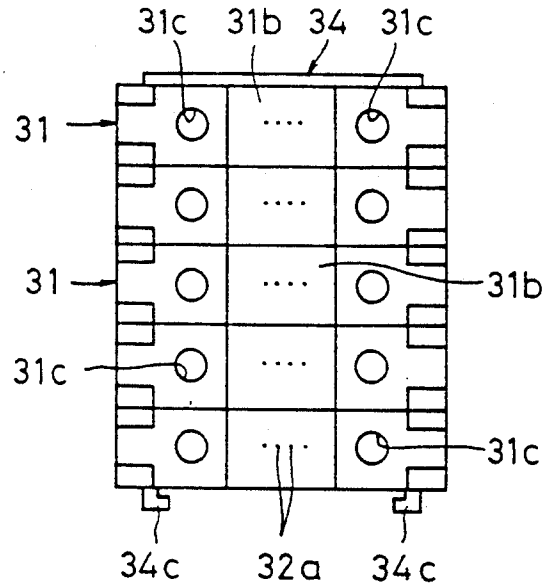
31c
31b
34
31c
31
31
31b
31c
31c
34c
32a
34c

FIG. 15

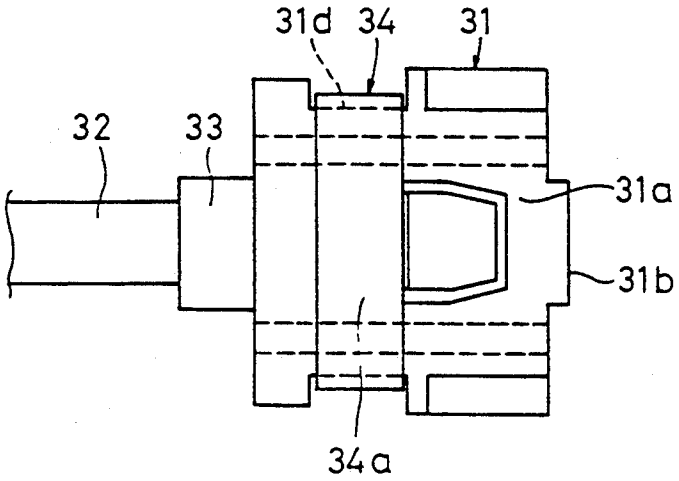
31d
34
31
32
33
31a
31b
34a

FIG. 16

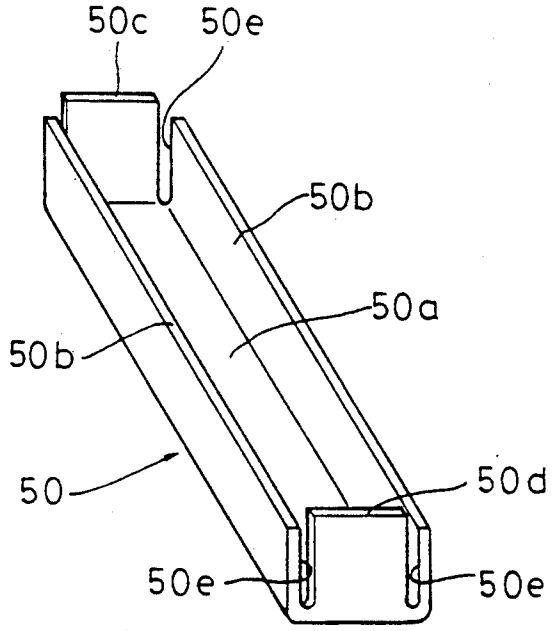
50c
50e
50b
50a
50b
50
50d
50e
50e

FIG. 17

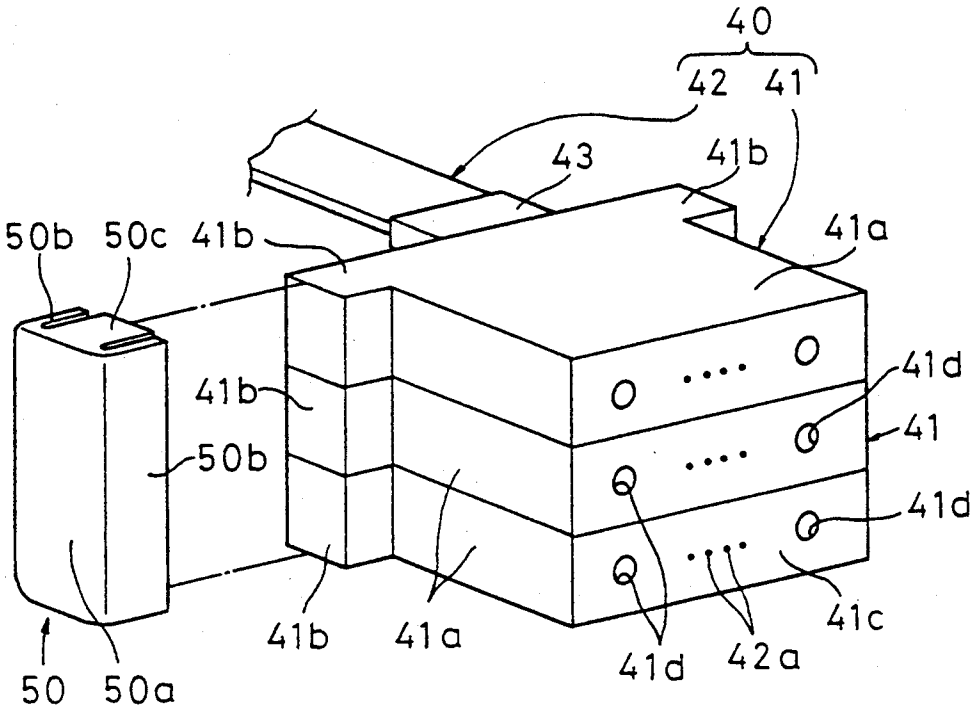
40
42
41
43
41b
41a
50b
50c
41b
41d
41b
41
50b
41d
41c
41b
41a
41d
42a
50
50a

FIG. 18

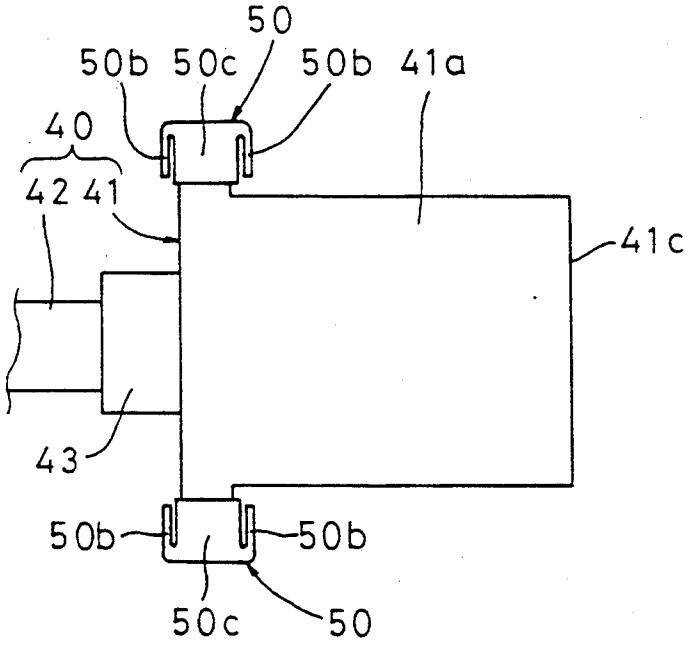
50
50b
50c
50b
41a
40
42
41
41c
43
50b
50b
50c
50

FIG. 19

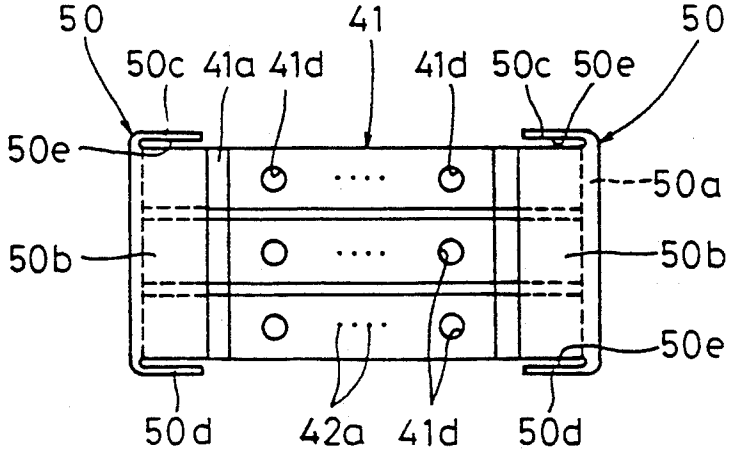
50
41
50
50c
41a
41d
41d
50c
50e
50e
50a
50b
50b
50e
50d
42a
41d
50d

FIG. 20

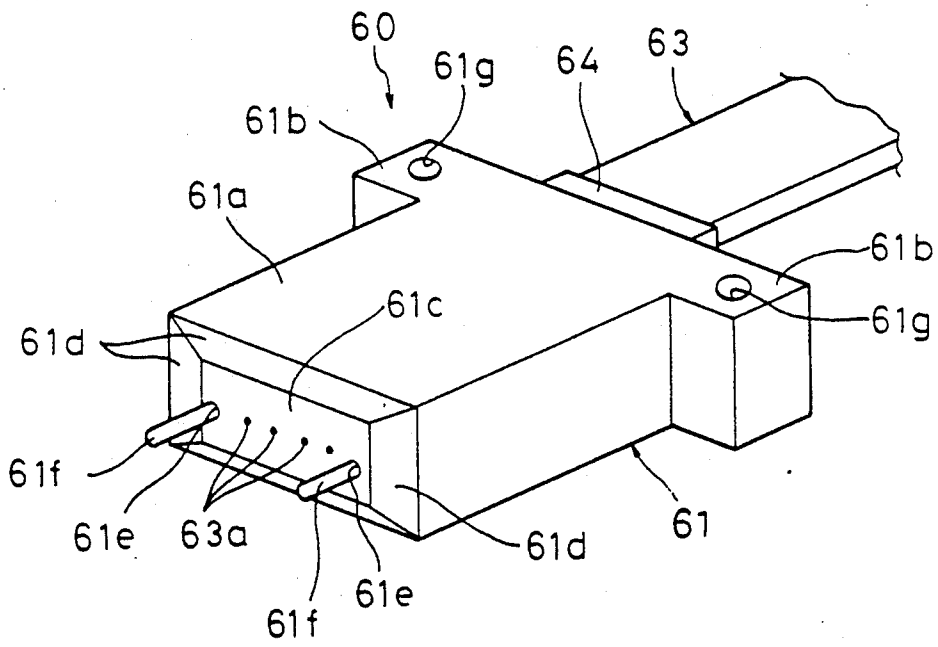
60
61g
64
63
61b
61a
61b
61c
61g
61d
61f
61e
63a
61d
61
61e
61f

FIG. 21

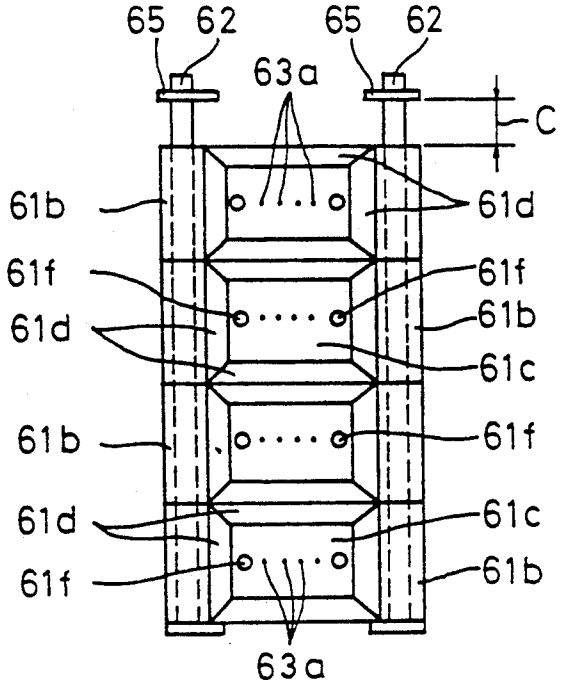
65
62
65
62
63a
C
61b
61d
61f
61f
61d
61b
61c
61b
61f
61d
61c
61f
61b
63a

FIG. 22

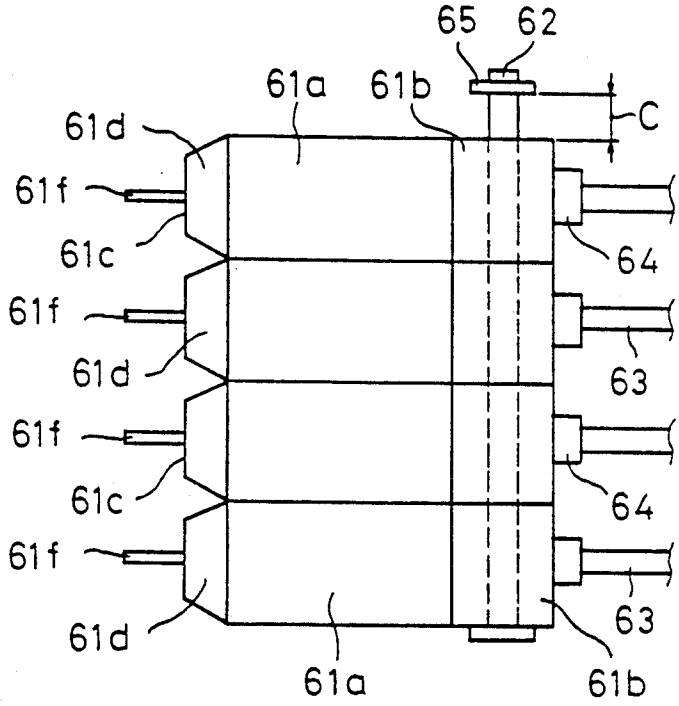
65
62
61a
61b
C
61d
61f
61c
64
61f
61d
63
61f
61c
64
61f
61d
63
61a
61b

FIG. 23

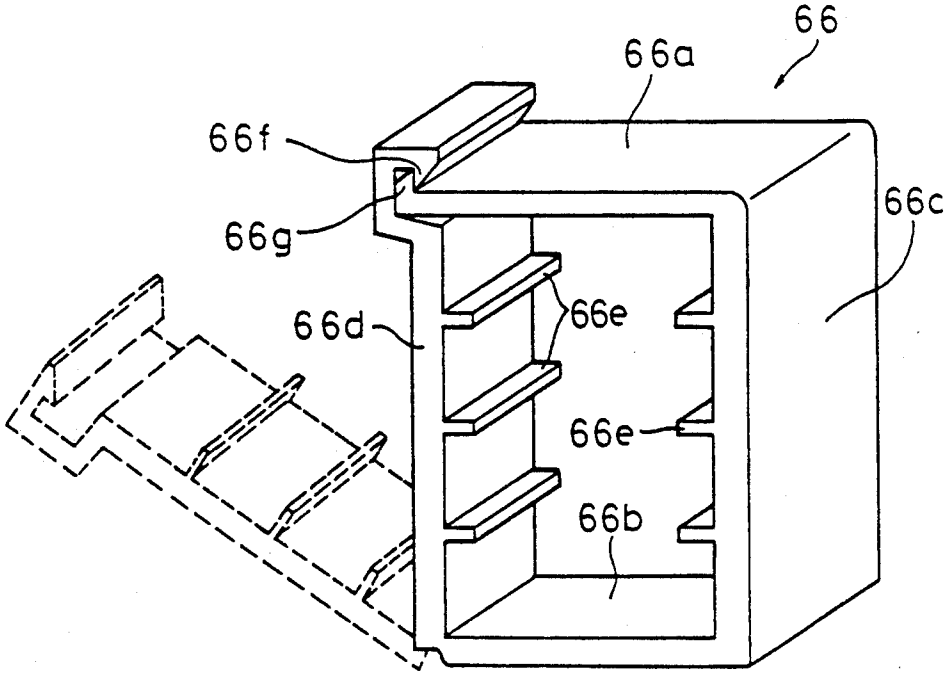
66
66a
66f
66g
66c
66d
66e
66e
66b

FIG. 24

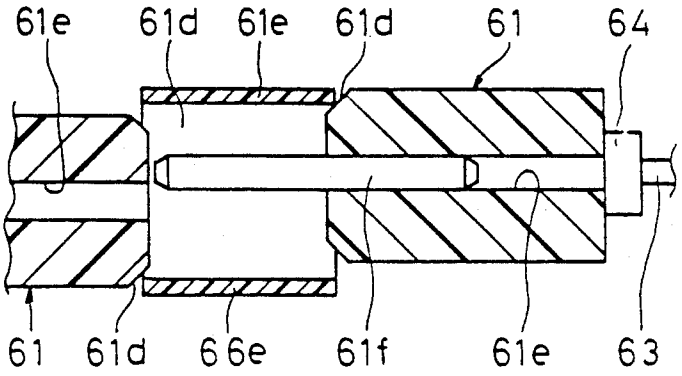

FIG. 25

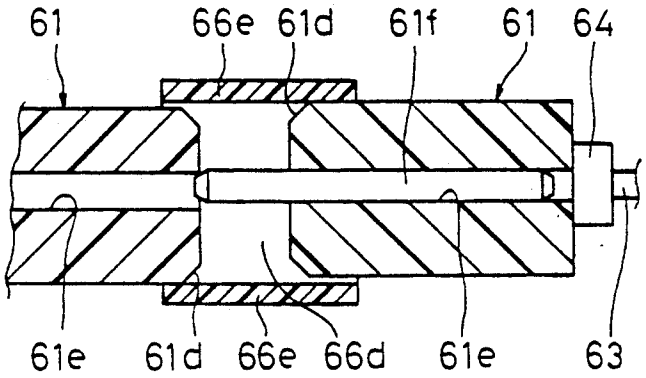

FIG. 26

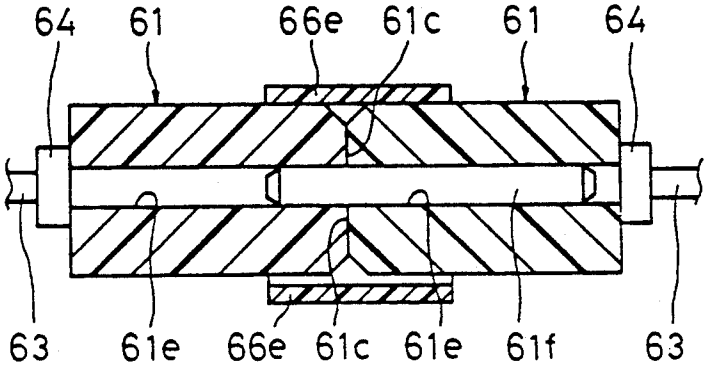

FIG. 27

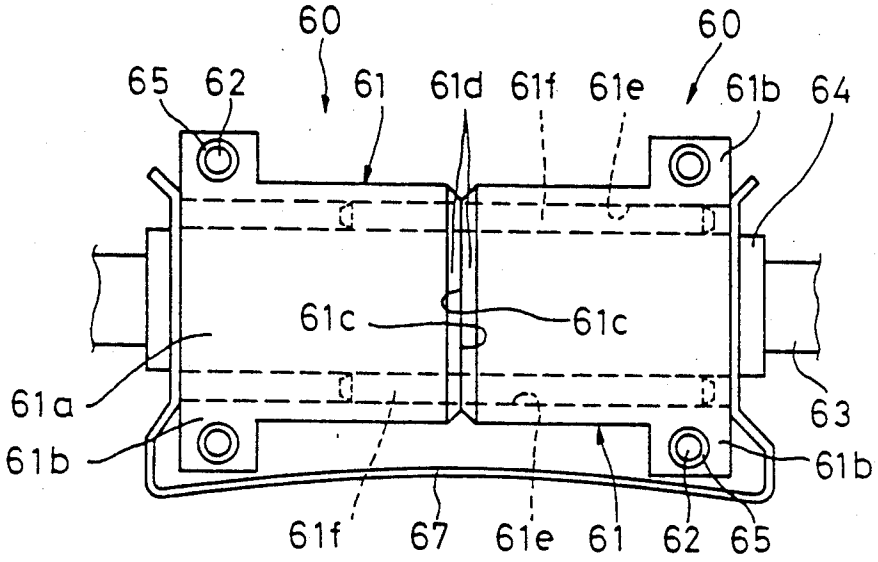
60
60
65
62
61
61d
61f
61e
61b
64
61c
61c
61a
63
61b
61b
61f
67
61e
61
62
65

FIG. 28

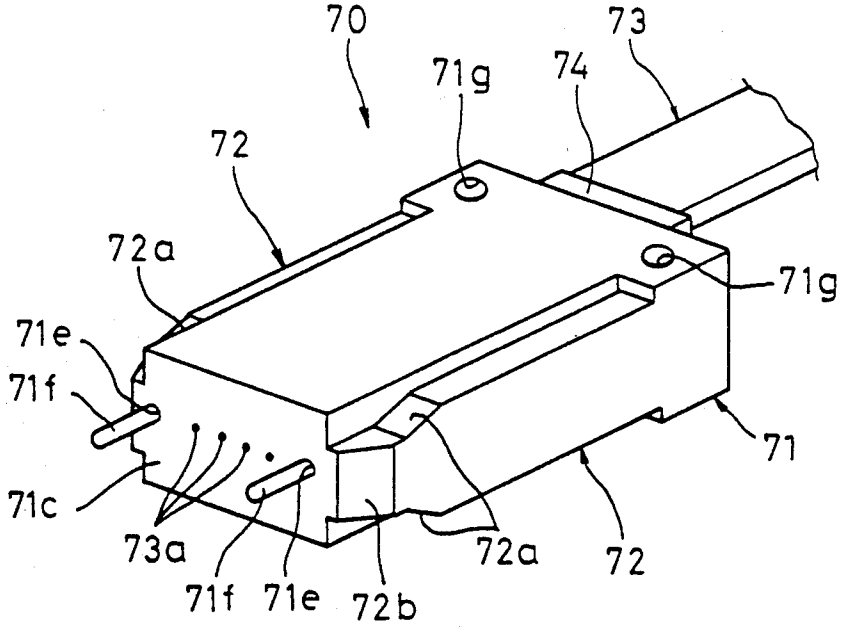
70
73
71g
74
72
72a
71g
71e
71f
71
71c
73a
72a
72
71f
71e
72b

FIG. 29
PRIOR ART

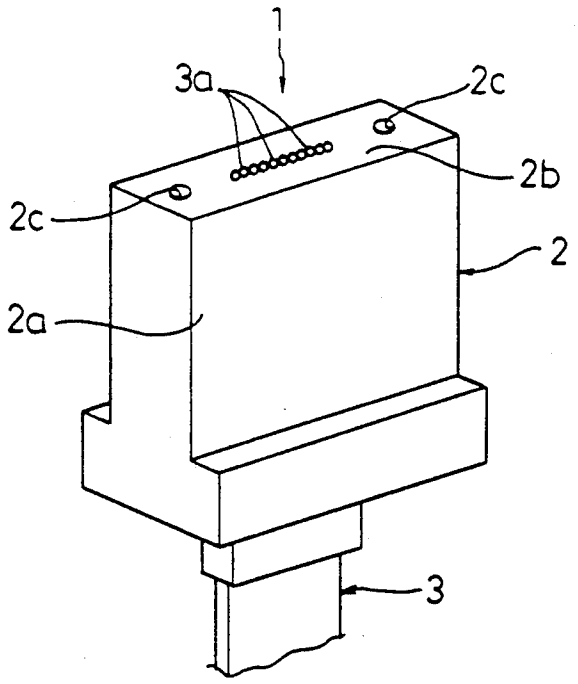

METHOD FOR STACKING FERRULES OF A STACKED-TYPE OPTICAL CONNECTOR AND A STACKED-TYPE OPTICAL CONNECTOR

BACKGROUND OF THE INVENTION

1. Field of the Invention

The present invention relates to a method for stacking ferrules of a stacked-type optical connector, and a stacked-type optical connector.

2. Description of Related Art

An optical connector used for butt-connecting individual optical fibers of optical communication lines has a ferrule **2** and a single or multi optical fiber **3** like, for example, an optical connector **1** as shown in FIG. **29**, the multi optical fiber **3** being installed on a main body **2***a* with the individual optical fibers **3***a* exposed at a butting end surface **2***b* of the main body **2***a*. The ferrule **2** has pin holes **2***c* and **2***c* provided on either side with the multi optical fiber **3** of the main body **2***a* between them, and it is butt-connected to a ferrule of another optical connector having the same configuration by inserting connecting pins, which are not shown, in the individual pin holes **2***c*.

To butt-connect the optical connector **1** simultaneously with a plurality of other optical connectors, it is necessary to form a plurality of optical connectors **1** into one piece. A method described in, for example, Japanese Unexamined Patent Publication (Kokai) No. 2-297506, is known as a method for forming the optical connectors **1** into one piece.

However, when a plurality of optical connectors are assembled into one piece according to the aforementioned method, a stacking housing of a complicated shape with a plurality of inserting holes formed in it is required, and there are partitions taking an extra space between ferrules on the stacking housing. This presents a problem of a lower packaging density of an optical connector, hindering the achievement of a reduced size.

When consolidating optical connectors, conventionally, a plurality of optical connectors were rigidly fixed to a stacking housing or the like in some cases. However, there were some cases where the positions of the pin holes **2***c* and **2***c* in an optical connector were not aligned with those in its matching optical connector due to a manufacturing error or the like. This presented a problem of prohibiting smooth butt-connection because when a plurality of optical connectors were rigidly stacked up and a stacked-type optical connector in a stack was butt-connected with its mating stacked-type optical connector, the aforementioned connecting pins could not be inserted in the pin holes or the pin holes were damaged.

SUMMARY OF THE INVENTION

An object of the present invention is to provide a method for stacking ferrules of a stacked-type optical connector whereby easy, high-density stacking of a plurality of ferrules can be achieved.

Another object of the present invention is to provide a stacked-type optical connector which permits smooth butt-connection between stacked-type optical connectors in a stack.

According to the method for stacking ferrules of a stacked-type optical connector of the present invention, a method for simultaneously stacking individual ferrules of a plurality of optical connectors is provided wherein positioning pin holes into which connecting pins are inserted are provided, all ferrules of a plurality of optical connectors are stacked up to simultaneously butt-connect a plurality of optical connectors, which have a ferrule having one or more than one optical fiber, to a plurality of corresponding optical connectors, stacking portions for stacking are provided in positions matching said individual ferrules, said individual ferrules are stacked with said stacking portions aligned, and a plurality of said ferrules are stacked up simultaneously using stacking members which function in cooperation with those corresponding stacking portions so that the ferrules practically float with a specific degree of freedom to allow gaps to be formed between the ferrules.

Further, according to the stacked-type optical connector of the present invention, a stacked-type optical connector is provided, wherein a plurality of optical connectors, which are butt-connected by positioning pin holes and connecting pins fitted into the respective pin holes, which are provided with stacking portions for stacking and which have a ferrule with one or more than one optical fiber, are simultaneously stacked up using stacking components that function in cooperation with said stacking portions in such a way that said ferrules practically float with a specific degree of freedom to allow a gap between the ferrules.

According to the method for stacking ferrules of a stacked-type optical connector of the present invention, a plurality of ferrules can be stacked up easily and compactly with a high density. Further, a stacked-type optical connector assembled using this method can be made smaller, and the time required for simultaneously connecting with other stacked-type optical connectors can be reduced.

Further, a plurality of ferrules are stacked up so that they are allowed to float, therefore, they can move with a specific degree of freedom when butt-connecting the stacked-type optical connectors, and the centers of the connecting pins and pin holes are automatically aligned, permitting smooth connection between the stacked-type optical connectors.

Furthermore, the stacking members used for stacking the ferrules have a simple structure and can be provided at a low cost. Adding the stacking portions to existing ferrules enables easy application of the present invention, permitting easy manufacture of the stacked-type optical connectors.

The aforementioned and other objects, characteristics and advantages of the present inventions will be further clarified by the detailed explanation set forth below with reference to the accompanying drawings.

BRIEF DESCRIPTION OF THE DRAWINGS

FIG. **1** is a front view of a stacked-type optical connector formed by stacking ferrules, illustrating the first embodiment related to the method for stacking the ferrules of a stacked-type optical connector, and a stacked-type optical connector;

FIG. **2** is a plan view of an optical connector before it is stacked up, which constitutes the stacked-type optical connector;

FIG. **3** is a perspective illustration of a stacking pin used for stacking ferrules;

FIG. **4** is a left side view of a stacked-type optical connector formed by stacking ferrules;

FIG. **5** is a plan view of the stacked-type optical connectors of FIG. **1** which are butt-connected;

FIG. 6 is a side view of the stacked-type optical connectors of FIG. 5;

FIG. 7 is a plan view of an optical connector before it is stacked up, illustrating the second embodiment of the present invention;

FIG. 8 is a front view of the stacking pin used for stacking the ferrules of the optical connector shown in FIG. 7;

FIG. 9 is a front view of a stacked-type optical connector with ferrules stacked up using the optical connector shown in FIG. 7;

FIG. 10 is a plan view of the stacked-type optical connector shown in FIG. 9;

FIG. 11 is a right side view of the stacked-type optical connector shown in FIG. 9;

FIG. 12 is a plan view of the optical connector before it is stacked up, illustrating the third embodiment of the present invention;

FIG. 13 is a perspective illustration of a coupling clip used for stacking the ferrule of the optical connector shown in FIG. 12;

FIG. 14 is a front view of the stacked-type optical connector wherein a plurality of the ferrules of the optical connector shown in FIG. 12 are stacked up with the coupling clip;

FIG. 15 is a plan view of the stacked-type optical connector shown in FIG. 14;

FIG. 16 is a perspective view of an elastic cap used for stacking the ferrules of a plurality of optical connectors, illustrating the fourth embodiment of the present invention;

FIG. 17 is a perspective view of the elastic cap to be fitted a plurality of pinching portions of the stacked ferrules;

FIG. 18 is a plan view of the stacked-type optical connector with the elastic cap fitted to the pinching portions of the stacked ferrules;

FIG. 19 is a front view of FIG. 18;

FIG. 20 is a perspective view of an optical connector showing a stacked-type optical connector, illustrating the fifth embodiment of the present invention;

FIG. 21 is a front view of a stacked-type optical connector assembled by stacking the optical connector shown in FIG. 20;

FIG. 22 is a right side view of the stacked-type optical connector shown in FIG. 21;

FIG. 23 is a perspective view of an adapter used for butt-connecting the stacked-type optical connector shown in FIG. 21 with another one;

FIG. 24 is a cross-sectional view showing an enlarged view of a major section of the optical connector and the adapter in an initial phase of the butt-connection between the stacked-type optical connectors shown in FIG. 21;

FIG. 25 is a cross-sectional view showing an enlarged view of a major section of the front section of the optical connector fitted to the adapter in the butt-connection of the stacked-type optical connectors;

FIG. 26 is a cross-sectional view showing an enlarged view of a major section of the butted optical connectors in the butt-connection of the stacked-type optical connectors;

FIG. 27 is a plan view of both stacked-type optical connectors with a clip on to keep them connected after the adapter is removed from the two butted stacked-type optical connectors;

FIG. 28 is a perspective view showing another optical connector which constitutes a stacked-type optical connector; and

FIG. 29 is a perspective view of an optical connector used for a method for stacking ferrules of a conventional stacked-type optical connector.

DETAILED DESCRIPTION OF THE PREFERRED EMBODIMENTS

The embodiments related to the method for stacking ferrules of a stacked-type optical connector and a stacked-type optical connector according to the present invention are explained in detail with reference to the drawings.

Embodiment 1

FIG. 1 through FIG. 6 illustrate the first embodiment of the present invention, the stacked-type optical connector being assembled by simultaneously stacking individual ferrules **11** of five optical connectors **10** with stacking pins **12** and **12**.

In the optical connector **10**, as shown in FIG. 2, a tape fiber **13** comprising a plurality of optical fibers which are covered and formed into a tape-like shape is installed on a main body **11***a* of a ferrule **11**, and a part extending from the rear of the main body **11***a* is protected by a boot **14**. The ends of the individual optical fibers **13***a* of the tape fiber **13** are exposed on a butting end surface **11***b*. Further, the main body **11***a* is stepped and protruded in its front half, and on either side of its width are provided pin holes **11***c* and **11***c* for connecting pins. In the rear of the main body **11***a*, outside the pin holes **11***c* and **11***c*, there are stacking holes **11***d* and **11***d* which vertically run through, and these stacking holes **11***d* and **11***d* constitute the stacking portions.

In the method for stacking the ferrules of a stacked-type optical connector according to the present invention, using the aforementioned optical connector **10**, five ferrules **11**, for example, are stacked up as described below.

First, the five ferrules **11** are stacked up so that all pairs of the stacking holes **11***d* and **11***d* are aligned. Then, from above the stacked ferrules **11**, the stacking pins **12** and **12** shown in FIG. 3 are inserted in the individual stacking holes **11***d* and **11***d*. The stacking pin **12**, as shown in the drawing, has a head **12***a* secured on the top surface of the main body **11***a* of the ferrule **11** and a pin shank **12***b* which is inserted in the stacking hole **11***d*, and it also has a concave groove **12***c* which is formed circumferentially near the bottom end of the pin shank **12***b* and at a height that is slightly greater than the overall thickness of all the five ferrules **11** stacked.

Then, a snap ring **15** such as a circular clip is fitted to the concave groove **12***c* of each stacking pin **12** jutting out downward from the bottom ferrule **11** so that it comes in contact with the bottom surface of the ferrule **11**. This assembles the five optical connectors **10** into a stacked-type optical connector with compactly stacked ferrules **11** as shown in FIG. 1 and FIG. 4.

The stacking pin **12** inserted in each stacking hole **11***d* does not come out of each ferrule **11** even if it is subjected to a force of drawing it out upward because the snap ring **15** is fitted to the concave groove **12***c*.

To butt-connect the stacked-type optical connector with another stacked-type optical connector, a connecting pin not shown is inserted in a pin hole **11***c* of the ferrule **11** of one stacked-type optical connector, the butting end surfaces **11***b* of the individual ferrules **11** are

butted, and the connecting pin is inserted in a matching pin hole **11***c* of the butted ferrule **11** so that it extends over both pin holes **11***c* and **11***c*.

In this case, the individual ferrules **11** of the stacked-type optical connectors are stacked up to allow the individual ferrules **11** to practically float in the axial direction of the stacking pins **12** with a specific degree of freedom so that a small gap is allowed between the ferrules **11**. Thus, when the connecting pins inserted in the individual pin holes **11***c* of one ferrule **11** are inserted in the pin holes **11***c* of the matching ferrule **11**, the ferrules **11** slightly float for the aforementioned gap in the axial direction of the stacking pins **12**. Therefore, the centers of the matching pin holes **11***c* with respect to the connecting pins are automatically aligned, ensuring smooth connection between the matching ferrules **11** and **11**.

In this way, the stacked-type optical connectors with a plurality of ferrules **11** stacked up are butt-connected by inserting connecting pins **16** (See FIG. **5**) in the matching pin holes **11***c* and **11***c* of the individual ferrules **11** as shown in FIG. **5** and FIG. **6**, and to their side surfaces are attached leaf springs **17** and **17** for holding the two stacked-type optical connectors connected.

The butt-connected stacked-type optical connectors can be easily separated into individual stacked-type optical connectors by removing the leaf springs **17** and **17**. Further, each stacked-type optical connector can be easily separated into individual optical connectors **10** by removing the snap ring **15** and drawing the stacking pins **12** out of the stacking holes **11***d*.

When simultaneously stacking up a plurality of ferrules **11** according to the foregoing method, no wasteful space is produced between stacked ferrules **11** of the stacked-type optical connectors, making it possible to compactly stack a plurality of ferrules **11** with a high packaging density. Furthermore, the ferrules **11** permit easy machining of the stacking holes **11***d* which constitute the stacking portions, and the stacking pins **12** have circular cross-sections, therefore, inexpensive stacked-type optical connectors can be provided.

Embodiment 2

FIG. **7** through FIG. **11** illustrate the second embodiment of the present invention wherein a ferrule **21** of an optical connector **20** is stacked to form a stacked-type optical connector with a U-shaped stacking pin **22**.

In the optical connector **20**, as shown in FIG. **7**, a tape fiber **23** is installed on a main body **21***a* of a ferrule **21**, and a part extending from the rear of the main body **21***a* is protected by a boot **24**. The ends of the individual optical fibers **23***a* are exposed on a butting end surface **21***b*. Further, on either side of the width of the main body **21***a* are provided pin holes **21***c* and **21***c* for connecting pins. In the rear of the main body **21***a*, outside the pin holes **21***c* and **21***c*, there are stacking holes **21***d* and **21***d* which vertically run through and which constitute the stacking portions.

The stacking pin **22** is a U-shaped pin consisting of a bridge **22***a* with inserting shanks **22***b* and **22***b* on either end of the bridge as shown in FIG. **8**. Concave grooves **22***c* are formed circumferentially near the bottom ends of the inserting shanks **22***b*, at a height which is slightly greater than the overall thickness of all the ferrules **21** stacked.

To stack, for example, five such optical connectors **20**, they are first stacked so that the stacking holes **21***d* and **21***d* of the ferrules **21** are aligned.

Then, the inserting shanks **22***b* of the stacking pin **22** are inserted in the matching stacking holes **21***d* from above the stacked ferrules **21** so that the bridge **22***a* extends from one stacking hole **21***d* to the other stacking hole **21***d*.

After that, snap rings **25** are fitted to concave grooves **22***c* of each stacking pin **22** jutting out downward from the bottom ferrule **21** so that they come in contact with the bottom surface of the ferrule **21**. This assembles the five optical connectors **20** into a stacked-type optical connector with compactly stacked up ferrules **21** as shown in FIG. **9** or FIG. **11**.

The stacking pin **22** with its inserting shanks **22***b* inserted in the matching stacking holes **21***d* does not come off each ferrule **11** even if it is subjected to a force of drawing it out upward because the snap rings **25** are fitted to the concave grooves **22***c*.

The stacked-type optical connectors with a plurality of ferrules **21** stacked up as described above can be easily butt-connected by inserting a connecting pin (not shown) into the matching pin holes **21***c* and **21***c* of each ferrule **21** so that the pin extends over the pin holes as in the first embodiment.

In this case, the individual ferrules **21** of the stacked-type optical connectors are stacked up so that the ferrules practically float with a specific degree of freedom in the axial direction of the inserting shanks **22***b* of the stacking pins **22** to allow a small gap between the ferrules **21**. Thus, when the connecting pins inserted in the individual pin holes **21***c* of one ferrule **21** are inserted in the pin holes **21***c* of the other ferrule **21**, the ferrules **21** float in the axial direction of each inserting shank **22***b*. As a result, the centers of the matching pin holes **21***c* with respect to the connecting pins are automatically aligned, ensuring smooth connection between the matching ferrules **21** and **21**.

The butt-connected stacked-type optical connectors can be easily separated into individual stacked-type optical connectors simply by detaching them. Further, each stacked-type optical connector can be easily separated into individual optical connectors **20** by removing the snap rings **25** from the concave grooves **22***c* and drawing stacking pin **22** out, thereby pulling the inserting shanks **22***b* and **22***b* out of the stacking holes **21***d* and **21***d*.

According to the present embodiment, a plurality of ferrules **21** can be easily and compactly stacked up to form a stacked-type optical connector, and further, the number of the ferrules **21** to be stacked can be changed by changing the length of the inserting shanks **22***b*. Further, compared with the foregoing embodiment, the number of the stacking pin **22** is only one, resulting in a fewer components required and also a shorter working time because one insertion allows a stacking pin to be inserted in two stacking holes.

Embodiment 3

The third embodiment of the present invention is now described with reference to FIG. **12** through FIG. **15**.

As shown in FIG. **12**, an optical connector **30** has a ferrule **31** and a tape fiber **32** whose end is attached to the ferrule **31**, a part of the tape fiber **32** which extends from the rear of the ferrule **31** being protected with a boot **33**. Individual optical fibers **32***a* of the tape fiber **32** are exposed on the butting end surface **31***b* which projects at the front of a main body **31***a* of the ferrule **31**. On either side of the width of the main body **31***a* are

provided pin holes **31***c* and **31***c* in which connecting pins are inserted for butt-connecting the optical connector with another optical connector. Concave stacking grooves **31***d* and **31***d* which constitute stacking portions are provided in the sides at the rear.

In this embodiment, the optical connector **30** having the foregoing configuration is stacked up with a coupling clip **34** shown in FIG. **13**.

The coupling clip **34** is made of metal or synthetic resin, and it has a bridge **34***a* arranged over the top surface of the ferrule **31**, and holding sections **34***b* and **34***b* to be fitted to the stacking grooves **31***d* and **31***d*, engaging hooks **34***c* bent inward being provided at the bottom ends of the holding sections **34***b*. The coupling clip **34** is designed so that the holding sections **34***b* between the bridge **34***a* and the engaging hooks **34***c* are slightly longer than the overall thickness of the ferrules **31** stacked.

To stack, for example, five ferrules **31**, these ferrules **31** are first stacked up so that their stacking grooves **31***d* are vertically aligned.

Then, the coupling clip **34** is fitted onto the five stacked ferrules **31** from above while spreading the holding sections **34***b* and **34***b*.

When the coupling clip **34** is pushed down along the stacking grooves **31***d* and **31***d*, the engaging hooks **34***c* and **34***c* slide down to the bottom ferrule **31**, being guided by the stacking grooves **31***d* and **31***d* in the side surfaces of the individual ferrules **31**.

When the engaging hooks **34***c* and **34***c* reach the bottom surface of the lowest ferrule **31**, the clamping force of the holding sections **34***b* and **34***b* causes the hooks to be secured onto the bottom surface of the lowest ferrule **31** and also causes the individual holding sections **34***b* to be fitted to the individual stacking grooves **31***d* of the five ferrules.

Thus, a stacked-type optical connector with the five ferrules **31** stacked together is formed as shown in FIG. **14** and FIG. **15**.

The coupling clip **34** does not come off the stacked-type optical connector even if it is subjected to an upward pulling force since the clamping force of the holding sections **34***b* keeps the engaging hooks **34***c* secured to the bottom surface of the lowest ferrule **31**.

To butt-connect the stacked-type optical connector with another stacked-type optical connector, connecting pins not shown are inserted in the pin holes **31***c* of each ferrule **31** of one stacked-type optical connector, the butting end surfaces **31***b* of the individual ferrules **31** are butted, and the connecting pins are inserted in corresponding pin holes **31***c* of the individual butted ferrules **31**, thus extending over both pin holes **31***c* and **31***c*.

In this case, the length of the holding sections **34***b* between the bridge **34***a* and the engaging hooks **34***c* of the coupling clip **34** is made slightly greater than the overall thickness of the ferrules **31** stacked. Therefore, the individual ferrules **31** of the stacked-type optical connectors are stacked up so that they practically float along the length of the holding sections **34***b* with a specific degree of freedom to allow a gap between the ferrules **31**. Thus, when the connecting pins inserted in the individual pin holes **31***c* of one ferrule **31** are inserted in the pin holes **31***c* of the mating ferrule **31**, the ferrules **31** float along the length of the holding sections. As a result, the centers of the matching pin holes **31***c* with respect to the connecting pins are automatically aligned, ensuring smooth connection between the matching ferrules **31** and **31**.

In this way, the stacked-type optical connectors with a plurality of ferrules **31** stacked up are butt-connected by inserting connecting pins in the matching pin holes **31***c* and **31***c* of the individual ferrules **31**, and a leaf spring (not shown) is attached to their sides for keeping them butt-connected as in the first embodiment.

The butt-connected stacked-type optical connectors can be easily separated into individual stacked-type optical connectors by removing said leaf spring and pulling them apart laterally.

Further, each stacked-type optical connector can be easily separated into individual optical connectors **30** by spreading the holding sections **34***b* and **34***b* and drawing the coupling clip **34** upward.

Embodiment 4

FIG. **16** through FIG. **19** illustrate the fourth embodiment of the method according to the present invention, wherein a plurality of optical connectors **40** are stacked into one piece with an elastic cap **50**.

In this case, the optical connector **40** has a ferrule **41**, a tape fiber **42**, and a boot **43** which protects a part extending from the rear of the ferrule **41** as shown in FIG. **17**.

The ferrule **41** has pinching portions **41***b* and **41***b* which protrude widthwise at the rear of a main body **41***a*, constituting the stacking portions. Optical fibers **42***a* of the tape fiber **42** are exposed on a front butting end surface **41***c*. Pin holes **41***d* and **41***d* which run through longitudinally are provided in either side of the main body **41***a*.

An elastic cap **50** is a component which wraps and holds all pinching portions **41***b* of a plurality of stacked ferrules **41**, and its height and longitudinal width are slightly greater than the all pinching portions **41***b* together of the stacked ferrules **41**. The elastic cap **50** has, as shown in FIG. **16**, a base wall **50***a*, side walls **50***b* and **50***b* standing on the side edges of the base wall **50***a*, a top wall **50***c*, and a bottom wall **50***d*. The elastic cap **50** further has slits **50***e* which separate the side walls **50***b* and **50***b* from the top and bottom walls **50***c* and **50***d*, each of the walls **50***b* through **50***d* being provided with elasticity.

There is no limitation on the material of the elastic cap **50** in particular as long as the stacked ferrules **41** are elastically held together. For instance, a metal such as aluminum or a synthetic resin such as polyethylene may be used.

In this embodiment, the ferrules **41** of a plurality of optical connectors **40** are stacked up using the elastic cap **50** as described below.

First, the desired number, e.g., three, of optical connectors **40** are stacked up by the pinching portions **41***b* which constitute the stacking portions to stack the ferrules **41**.

Then, as shown in FIG. **17**, the elastic cap **50** is fitted onto the three pinching portions **41***b* on one side of the stacked ferrules **41**. In the same manner, the elastic cap **50** is fitted onto the three pinching portions **41***b* on the other side to form a stacked-type optical connector shown in FIG. **19**. Accordingly, in this stacked-type optical connector, a small gap is allowed between the ferrules **41** so that the ferrules can move slightly and also practically float in the longitudinal direction, i.e., the butting direction, and in the vertical direction with a specific degree of freedom.

In this case, the elastic cap **50** has a slightly greater height and longitudinal width than the size of all pinch-

ing portions **41***b* together of the stacked ferrules **41**, and each of the walls **50***b* through **50***d* is given elasticity by the slits **50***e*. Therefore, the walls **50***b* through **50***d* elastically deform to slightly expand, allowing the elastic cap **50** to be easily fitted onto all the pinching portions **41***b* as shown in FIG. **18** and FIG. **19**.

Thus, by using the elastic cap **50**, the three optical connectors **40** can be formed into a stacked-type optical connector wherein a plurality of ferrules **41** are compactly and easily stacked up without taking any extra space. In addition, the elastic cap **50** can be provided at a low cost because of its simple structure.

In the case of the stacked-type optical connector, the elastic cap **50** can be easily removed from a plurality of the pinching portions **41***b* simply by pulling the elastic cap **50** sideways, thus separating the stacked ferrules **41** into individual pieces.

The stacked-type optical connector with a plurality of ferrules **41** stacked is butt-connected with another stacked-type optical connector by inserting connecting pins not shown into the corresponding pin holes **41***d* and **41***d* of the mating ferrules **41** and **41** in such a manner that the pins extend over the pin holes.

When butt-connecting the stacked-type optical connectors, the pinching portions **41***b* of a plurality of the ferrules **41** are held together by the elastic cap **50**, and the individual ferrules **41** are stacked so that they practically float in the longitudinal direction, i.e., the butting direction, and in the vertical direction with a specific degree of freedom. Therefore, the individual ferrules **41** slightly float when butt-connecting the stacked-type optical connectors, and when the connecting pins inserted into the individual pin holes **41***c* of one ferrule **41** are inserted in the pin holes **41***c* of the mating ferrule **41**, the centers of the matching pin holes **41***c* are automatically aligned, ensuring smooth connection between the matching ferrules **41** and **41**.

Embodiment 5

The fifth embodiment of the present invention is now described in detail, referring to FIG. **20** through FIG. **28**.

A stacked-type optical connector **60** consists of a plurality of optical connectors **61** shown in FIG. **20** which are stacked with stacking pins **62** so that they can float in the axial direction of the pins with a specific degree of freedom to allow a gap between the individual ferrules as shown in FIG. **21** and FIG. **22**.

As shown in FIG. **20**, the optical connector **61** has a ferrule main body **61***a* with individual optical fibers **63***a* of a tape fiber **63** exposed at the front, and pinching portions **61***b* and **61***b* which project widthwise at the rear of the main body **61***a*. A part of the tape fiber **63**, which extends from the main body **61***a*, is protected with a boot **64**.

The main body **61***a* has a tapered surface **61***d* around a front butting end surface **61***c*, and pin holes **61***e* and **61***e* formed lengthwise in either side of the width of the main body **61***a*. Connecting pins **61***f* and **61***f* for positioning when connecting with another stacked-type optical connector are inserted in the individual pin holes **61***e* in such a manner that they jut out from the butting end surface **61***c* and are free to move vertically.

The connecting pins **61***f* are made slightly longer than the pin holes **61***e* so that their ends on one side protrude from the pin holes **61***e* by a specific length when they are inserted in the pin holes **61***e*. Further, the ends of the connecting pins **61***f* and of the pin holes **61***e* are tapered for easy insertion of the connecting pins **61***f*. The individual pinching portions **61***b* have stacking holes **61***g* and **61***g* which run through vertically, and these stacking holes **61***g* and **61***g* constitute the stacking portions.

As shown in FIG. **21** and FIG. **22**, the stacked-type optical connector **60** is assembled by stacking four optical connectors **61** with the stacking holes **61***g* in the pinching portions **61***b* aligned and inserting the stacking pins **62** in the vertically aligned stacking holes **61***g*, then installing snap rings **65** near the top ends.

In this case, the length of the stacking pins **62** of the stacked-type optical connector **60** is set slightly greater than the height of the optical connectors **61** stacked up so that, when the stacked-type optical connector is assembled, the individual optical connectors **61** can practically float and move with a specific degree of freedom in the axial direction of the stacking pins **62** by a gap C formed between the top optical connector **61** and the snap rings **65** as shown in FIG. **21** and FIG. **22**. The floating amount which allows the individual optical connectors **61** to move in the axial direction of the stacking pins **62** and which is given by the gap C formed between the top optical connector **61** and the snap rings **65** is set smaller than the chamfering amount of the tapered surfaces **61***d* in the optical connector **61** and the chamfering amount of the ends of the connecting pins **61***f* or the pin holes **61***e*.

The stacked-type optical connector **60** thus assembled is butt-connected to another stacked-type optical connector via an adapter **66** shown in FIG. **23**.

The adapter **66** has top and bottom pieces **66***a* and **66***b*, a side piece **66***c*, a flap **66***d* hinged with the bottom piece **66***b*, and a plurality of partitioning pieces **66***e* protruding from the side piece **66***c* and the flap **66***d*, the adapter being molded into one piece using a synthetic resin or the like. The adapter **66** is shaped like a rectangular tube by hooking a hook **66***f* provided on the top end of the flap **66***d* onto a engaging projection **66***g* formed on the end of the top piece **66***a*. When the stacked-type optical connector **60** is attached to the adapter, the individual optical connectors **61** vertically move with its tapered surfaces **61***d* being guided by the partitioning pieces **66***e*, and they are separately housed in the respective spaces formed by the side piece **66***c*, the flap **66***d*, and the individual partitioning pieces **66***e*.

In this case, the gap C formed between the top optical connector **61** and the snap ring **65** specifies the floating amount for the optical connector **61** to move in the axial direction of the stacking pin **62**. However, the actual floating amount allowed for each optical connector **61** is a value obtained by subtracting the total thickness of the three partitioning pieces **66***e* of the adapter **66** from the gap C and then equally dividing the resulting value.

A stacked-type optical connector **60** using the adapter **66** thus configured is butt-connected to another stacked-type optical connector **60** according to the following procedure.

First, the stacked-type optical connector **60** with connecting pins **61***f* inserted in the respective pin holes **61***e* is placed facing the other stacked-type optical connector **60** with no pins inserted, and the tapered surfaces **61***d* of the individual optical connectors **61** are applied to the partitioning pieces **66***e* of the adapter **66** as shown in FIG. **24**.

Then, when the individual stacked-type optical connectors **60** are pushed into the adapter **66**, the tapered surfaces **61***d* are guided by the individual partitioning pieces **66***e* of the adapter **66**, the individual optical con-

nectors **61** vertically float, and as shown in FIG. **25**, the front side of each of the optical connectors **61** is fitted into a specific space enclosed by the side piece **66***c*, the flap **66***d* and each partitioning piece **66***e* of the adapter **66**. At the same time, the individual connecting pins **61***f* retreat while they are in contact with the pin holes **61***e* of the matching optical connector **61**, thus moving in the respective pin holes **61***e* of the matching optical connector **61** to the right in the drawing.

When both stacked-type optical connectors **60** are further pushed into the adapter **66**, the individual connecting pins **61***f* of one optical connector **61** are inserted in the individual pin holes **61***e* of the other optical connector **61** while they are guided by the tapered ends, thereby butting the butting end surfaces **61***c* and **61***c* of the two optical connectors **61** and **61** as shown in FIG. **26**. Thus, the individual optical connectors **61** of the stacked-type optical connectors **60** and **60** are butt-connected with the adapter **66**.

At this time, the individual optical connectors **61** float in the axial direction of the stacking pins **62** and **62** to permit good positioning for butt-connection. Since the floating amount is set smaller than the chamfering amount of the tapered surface **61***d* and of the end of each connecting pin **61***f*, each of the optical connectors is fitted into the specific space enclosed by the side piece **66***c*, the flap **66***d* and each **66***e* of the adapter **66**. In addition, the individual connecting pins **61***f* of the mating optical connector **61** are made slightly longer than the pin holes **61***e*, and therefore, their ends are inserted in the pin holes **61***e* of the matching optical connector **61**. In this way, the tape fibers **63** of the individual optical connectors **61** are properly butt-connected so that the individual optical fibers **63***a* exposed on the butting end surfaces **61***c* incur no connecting loss.

The adapter **66** is removed from the properly butt-connected stacked-type optical connectors **60** and **60** by releasing the engagement between the hook **66***f* and the engaging projection **66***g*, pulling the flap **66***d* down, and drawing out the individual partitioning pieces **66***e* installed between the optical connectors **61** and **61**. After that, a clip **67** is fitted from a side onto the two connected stacked-type optical connectors **60** and **60** as shown in FIG. **27** to hold them connected.

In the case of the stacked-type optical connectors **60** thus butt-connected, if a failure or the like occurs, only an affected optical connector **61** can be isolated by removing the clip **67** and drawing out the stacking pins **62** and **62** to separate the optical connectors into single optical connectors **61**. This makes it possible to perform maintenance work such as repair with all optical fibers **63***a* in other optical connectors **61** alive. Further, it is also possible to branch the optical line, taking out only the desired optical connector **61** while keeping the line alive.

Each of the optical connectors of the above-described stacked-type optical connector **60** may be provided with a guide **72** which extends lengthwise along either side of a ferrule **71** as in an optical connector **70** shown in FIG. **28**, the guide **72** being provided, as shown in the drawing, with tapered surfaces **72***a* and **72***a* which serve as vertical guides and a tapered surface **72***b* which serves as a widthwise guide for butt-connecting the connectors via the adapter **66**. In FIG. **28**, the same components as those of the optical connector **61** of the foregoing stacked-type optical connector **60** are given the corresponding numbers, the detailed description being omitted.

In the embodiments described above, when the ferrules are stacked up with the stacking pins, the snap rings are fitted near the ends of the stacking pins to prevent the pins from slipping off the ferrules. It is needless to say that the means for preventing the stacking pins from slipping off the ferrules is not limited to the snap rings as long as it serves the purpose, and a cotter pin, for instance, may be used as the retainer.

Further, in the embodiment wherein an adapter is used to stack the ferrules, the optical connectors are provided with tapered surfaces. It is needless to say that the adapter may be provided with tapered surfaces which serve as guides at the time of butt-connection.

Furthermore, in all the embodiments discussed above, the description is given of optical connectors which have multi optical fibers, but it is needless to say that the optical connectors may have only single optical fibers.

What is claimed is:

1. A method for stacking ferrules of a stacked-type optical connector wherein individual ferrules of a plurality of optical connectors are all stacked up to simultaneously butt-connect a plurality of optical connectors, which optical connectors are provided with positioning pin holes in which connecting pins are inserted and which have a ferrules with at least one optical fiber, to a plurality of other matching optical connectors, and wherein stacking portions for stacking are provided in each ferrule at matching positions on said individual ferrules,

the method comprising:

stacking said individual ferrules with said individual stacking portions of each of said stacked ferrules aligned; and

engaging at least one stacking member with said aligned stacking portions of each of said stacked ferrules such that said ferrules are all stacked up using said at least one stacking member working in cooperation with corresponding stacking portions of said stacked ferrules so that said stacked and engaged ferrules each are movable relative to each other and can practically float with a specific degree of freedom, and thereby allowing a gap to be formed between the respective ferrules during butt-connecting of said stacked ferrules.

2. The method for stacking ferrules of a stacked-type optical connector according to claim **1**, wherein said stacking portions comprise stacking holes formed in each of said ferrules.

3. The method for stacking ferrules of a stacked-type optical connector according to claim **2**, wherein said at least one stacking member comprises:

a plurality of stacking pins which are inserted in respective corresponding aligned stacking holes of the stacked ferrules; and

retaining means coupled to said stacking pins for retaining said stacking pins inserted in said stacking holes.

4. The method for stacking ferrules of a stacked-type optical connector according to claim **3**, wherein said retaining means comprises a concave groove formed in each of said stacking pins, and a snap ring fitted onto the concave groove of each stacking pin.

5. The method for stacking ferrules of a stacked-type optical connector according to claim **2**, wherein said stacking member comprises a single stacking pin which is spread over and inserted in said aligned stacking holes of said stacked ferrules, and which is provided with a

retaining means for retaining said stacking pins in said stacking holes.

6. The method for stacking ferrules of a stacked-type optical connector according to claim 5, wherein said retaining means comprises concave grooves formed in said stacking pin and snap rings fitted to the respective concave grooves.

7. The method for stacking ferrules of a stacked-type optical connector according to claim 1, wherein said stacking portions comprise stacking grooves provided in said ferrule.

8. The method for stacking ferrules of a stacked-type optical connector according to claim 7, wherein said stacking member comprises a coupling clip which has holding portions to be fitted to said aligned stacking grooves of said stacked ferrules, and engaging hooks.

9. The method for stacking ferrules of a stacked-type optical connector according to claim 1, wherein said stacking portion comprises pinching portions provided on said ferrule.

10. The method for stacking ferrules of a stacked-type optical connector according to claim 9, wherein said stacking member comprises an elastic cap means for wrapping and holding all said pinching portions which are aligned and stacked.

11. The method for stacking ferrules of a stacked-type optical connector according to claim 10, wherein said cap means is provided with slits for producing elasticity in said cap means.

12. A stacked-type optical connector wherein optical connectors, each including a ferrule, are stacked up, comprising:

a plurality of said optical connectors which are adapted to be butt-connected by means of positioning pin holes and connecting pins fitted in the respective pin holes, each optical connector having respective stacking portions for use in said stacking and which are aligned when said optical connectors are stacked;

each optical connector having a ferrule with at least one optical fiber; and

stacking means engageable with said aligned stacking portions such that a plurality of said ferrules are engaged in a stacked manner with said stacking means and are movable relative to each other and are allowed to practically float with a specific degree of freedom, to thereby allow a gap to form between the respective ferrules during butt-connecting of said stacked ferrules.

13. The stacked-type optical connector according to claim 12, wherein said stacking means comprises stacking holes provided in said ferrules.

14. The stacked-type optical connector according to claim 13, wherein said stacking means comprises a plurality of stacking pins which are inserted in said corresponding aligned stacking holes of said stacked ferrules and which are provided with a retaining means for retaining said stacking pins engaged in said stacking holes.

15. The stacked-type optical connector according to claim 14, wherein said retaining means comprises a respective concave groove formed in each said stacking pin and a snap ring fitted to the respective concave groove.

16. The stacked-type optical connector according to claim 13, wherein said stacking means comprises a single stacking pin which is extended over and inserted in said corresponding aligned stacking holes and which is provided with a retaining means for retaining said stacking pin in said aligned stacking holes.

17. The stacked-type optical connector according to claim 16, wherein said retaining means comprises concave grooves formed in said stacking pin, and snap rings fitted to the respective concave grooves.

18. The stacked-type optical connector according to claim 12, wherein said stacking means comprises stacking grooves formed in said ferrule.

19. The stacked-type optical connector according to claim 18, wherein said stacking means comprises a coupling clip which has holding portions fitted to said corresponding aligned stacking grooves and engaging hooks.

20. The stacked-type optical connector according to claim 12, wherein said stacking means comprises pinching portions provided on said ferrule.

21. The stacked-type optical connector according to claim 20, wherein said stacking means comprises an elastic cap means for wrapping and holding all of said corresponding aligned pinching portions of said stacked ferrules.

22. The stacked-type optical connector according to claim 21, wherein said cap means is provided with slits which produce elasticity in said cap means.

23. The stacked-type optical connector according to claim 12, wherein said stacked-type optical connector is butt-connected to another stacked-type optical connector via an adapter.

24. The stacked-type optical connector according to claim 23, wherein the individual ferrules of said stacked-type optical connector are provided with guides for butt-connecting to another stacked-type optical connector via said adapter.

* * * * *