US006224268B1

(12) **United States Patent**
**Manning et al.**

(10) **Patent No.: US 6,224,268 B1**
(45) **Date of Patent: May 1, 2001**

(54) **PLUG HOUSING WITH ATTACHED CANTILEVERED LATCH FOR A FIBER OPTIC CONNECTOR**

(75) Inventors: **Randy Marshall Manning**, New Cumberland; **Bryan Thomas Edwards**, Camp Hill; **Shelly Ann Buchter**, East Berlin; **Robert Carl Briggs**, Newport, all of PA (US)

(73) Assignee: **The Whitaker Corporation**, Wilmington, DE (US)

( * ) Notice: Subject to any disclaimer, the term of this patent is extended or adjusted under 35 U.S.C. 154(b) by 0 days.

(21) Appl. No.: **09/064,952**

(22) Filed: **Apr. 23, 1998**

(51) **Int. Cl.**[7] ..... **G02B 6/38**
(52) **U.S. Cl.** ..... **385/56**; 385/76
(58) **Field of Search** ..... 385/56–79, 147

(56) **References Cited**

U.S. PATENT DOCUMENTS

| | | | | |
|---|---|---|---|---|
| 3,999,837 | * | 12/1976 | Bowen et al. | 385/54 |
| 4,186,999 | * | 2/1980 | Harwood et al. | 385/66 |
| 4,759,599 | | 7/1988 | Yamaguchi et al. | 350/96.21 |
| 5,325,455 | * | 6/1994 | Henson et al. | 385/89 |
| 5,481,634 | | 1/1996 | Anderson et al. | 385/76 |
| 5,524,160 | | 6/1996 | Debeaux et al. | 385/92 |
| 5,717,802 | * | 2/1998 | Briggs et al. | 385/75 |
| 5,720,653 | * | 2/1998 | Miller et al. | 451/278 |
| 5,828,804 | * | 10/1998 | Akins et al. | 385/58 |

FOREIGN PATENT DOCUMENTS

| | | |
|---|---|---|
| 0 685 750 | 12/1995 | (EP) . |
| 58-0585 10 | 4/1983 | (JP) . |
| 58-090607 | 5/1983 | (JP) . |
| 59-140410 | 8/1984 | (JP) . |

* cited by examiner

*Primary Examiner*—Akm E. Ullah
(74) *Attorney, Agent, or Firm*—June B. Schuette

(57) **ABSTRACT**

A novel forward-facing, aft-attached cantilever beam is provided as a latch for securing a fiber optic connector to a receptacle. The beam has engagement structure on its free end which attaches to the receptacle. The connector includes a plug housing formed from a member having a forward end and a rearward end and an axial passageway therethrough through which at least one optical fiber provided in the fiber optic cable extends. The forward end is inserted into the receptacle with the rearward end extending from the receptacle. The cantilevered beam has an end fixed to a rearward portion of the member and its free end extends forwardly toward the forward end of the member. To engage the connector with the receptacle, the free end of the cantilevered beam is biased toward the member and the member is slid into the receptacle. Once fully inserted, the engagement structure on the cantilevered beam engages retention structure in the receptacle. The connector can be released from engagement with the receptacle by biasing the cantilevered beam such that the engagement structure on the beam is released from the retention structure of the receptacle and thereafter pulling the connector out of the receptacle.

**28 Claims, 4 Drawing Sheets**

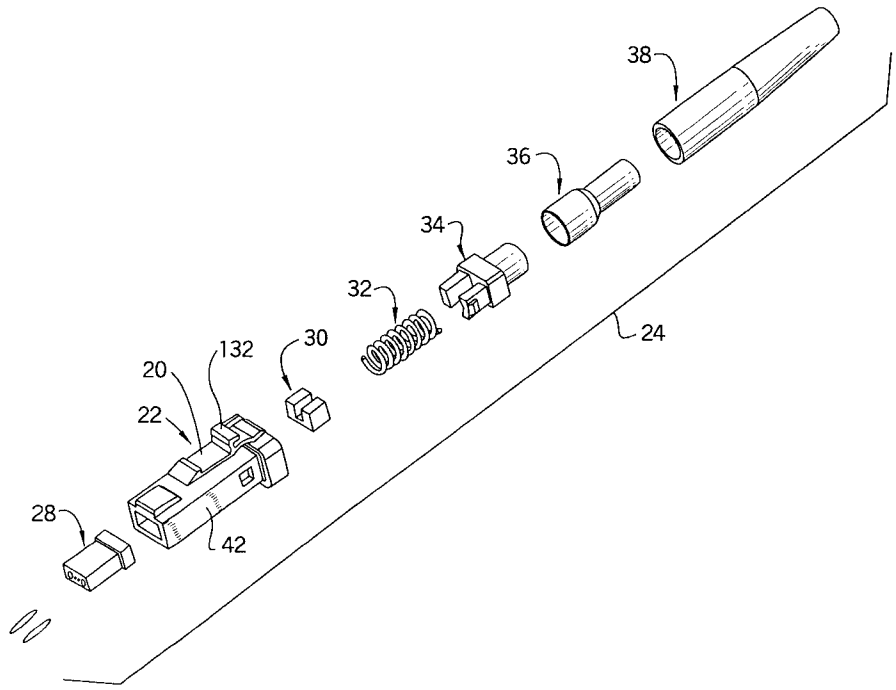

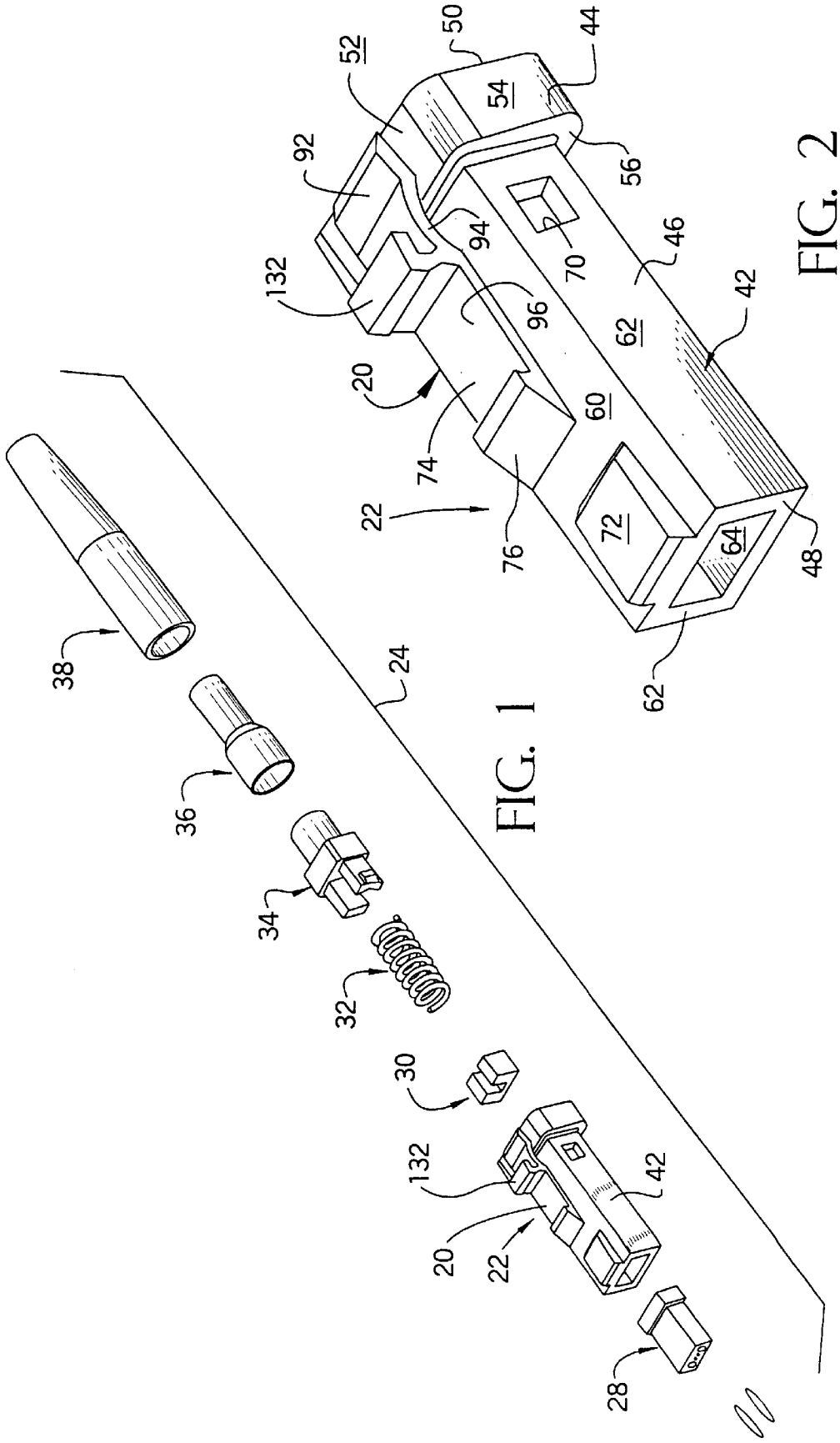
50
44
52
54
92
56
94
70
46
132
96
62
42
20
60
74
22
76
72
64
48
62
38
24
36
34
32
30
132
42
20
22
28

FIG. 2

FIG. 1

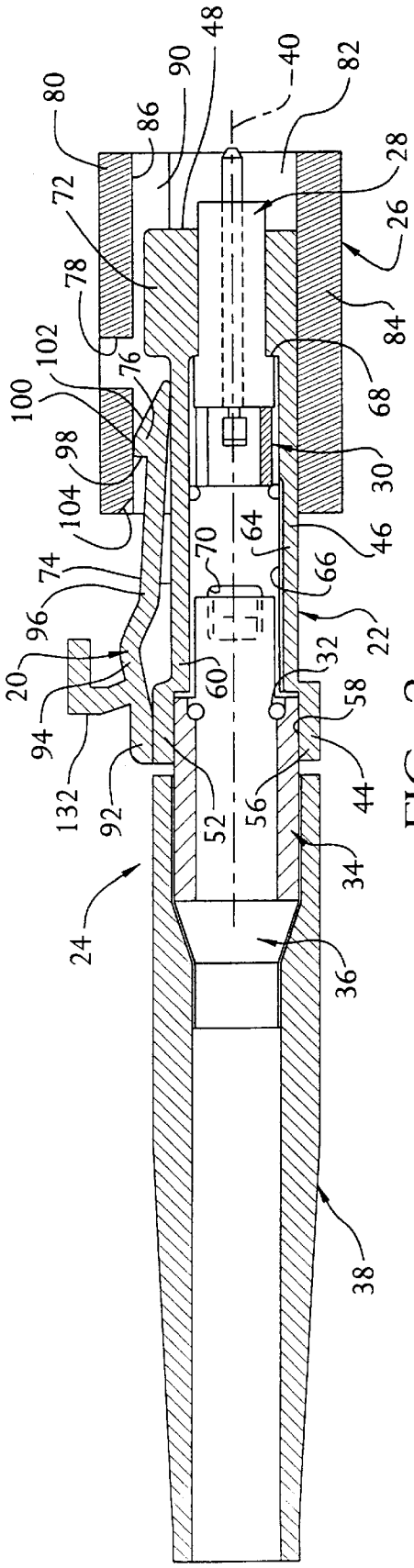
80
86
90
48
40
82
28
26
72
78
84
102
76
100
68
98
30
104
64
46
70
74
66
96
22
20
32
60
58
94
132
92
52
56
44
34
24
36
38

FIG. 3

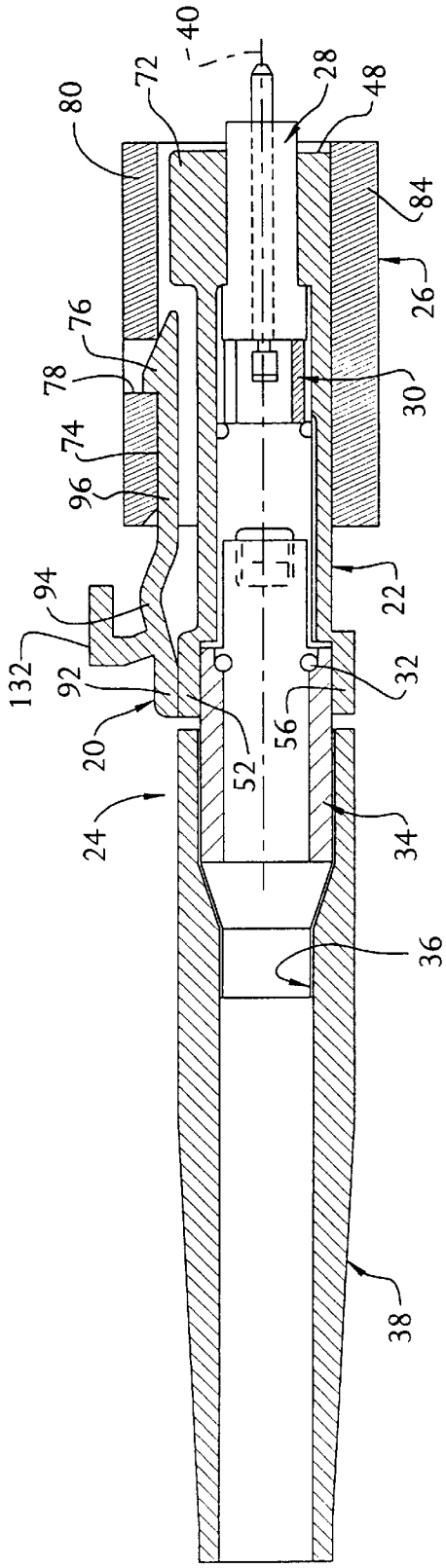
40
72
28
48
80
84
26
76
78
30
74
96
94
22
132
92
32
20
56
52
24
34
36
38

FIG. 4

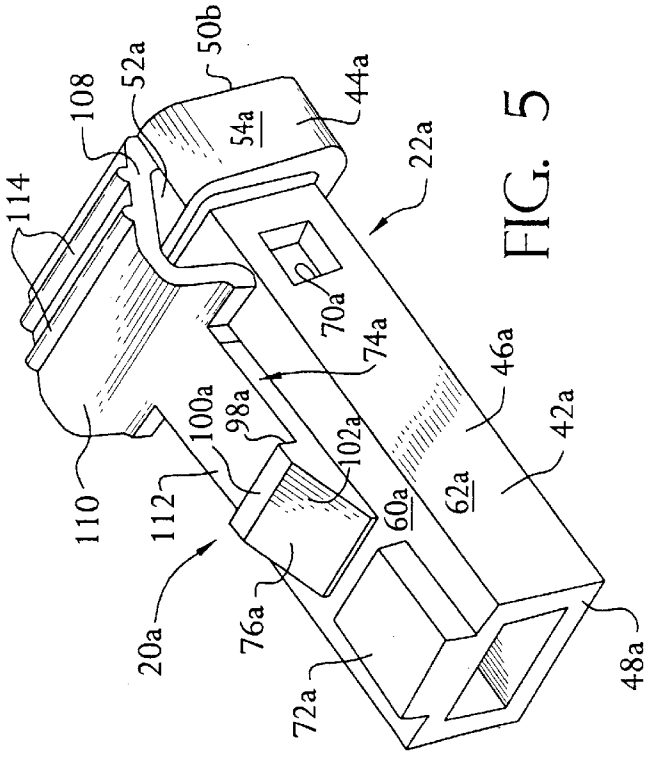
114
108
52a
50b
44a
54a
22a
70a
74a
46a
42a
100a
98a
102a
60a
62a
110
112
20a
76a
72a
48a

FIG. 5

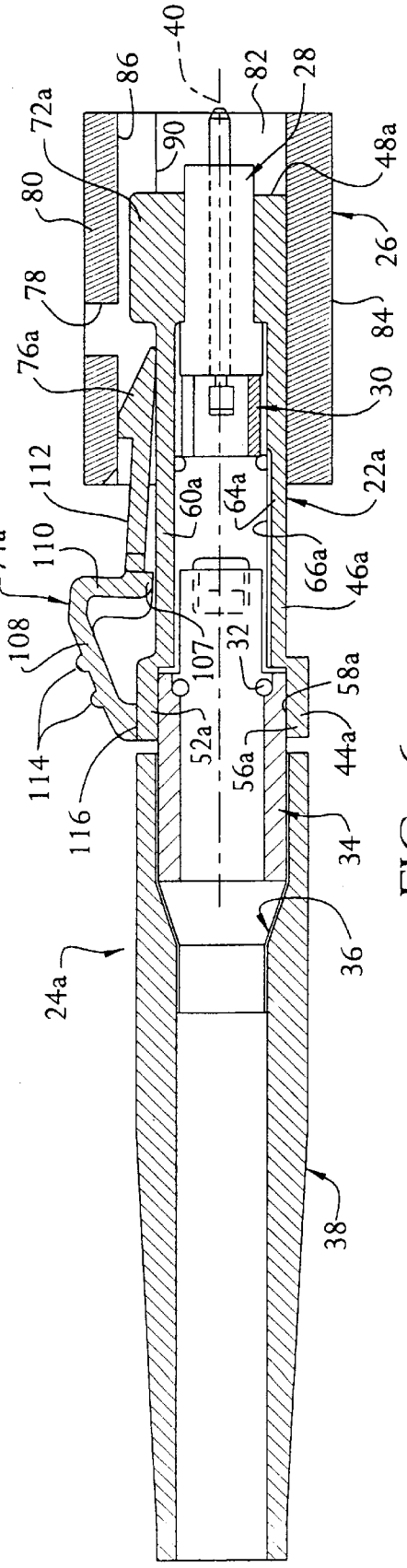
40
86
82
28
72a
90
48a
80
26
78
84
76a
30
112
60a
64a
22a
74a
110
66a
46a
108
107
32
58a
114
52a
44a
116
56a
34
36
24a
38

FIG. 6

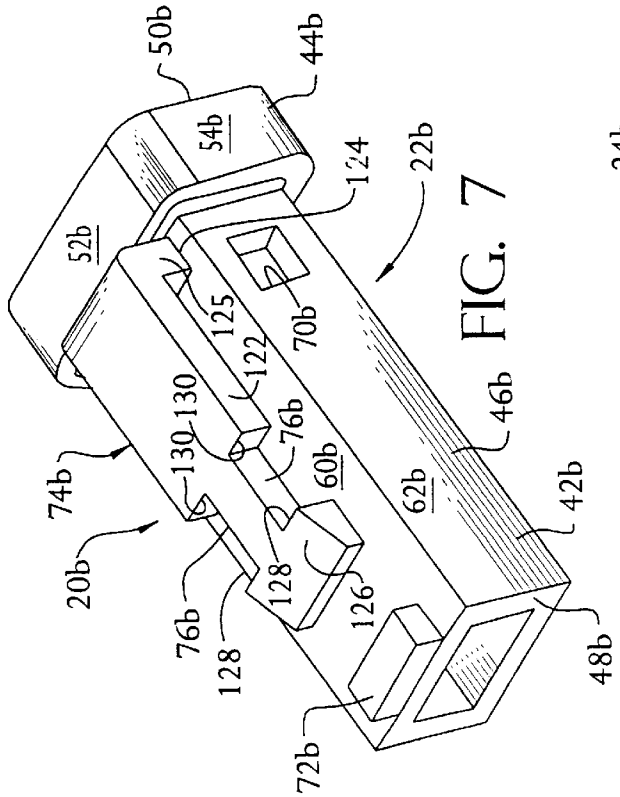
50b
44b
54b
124
22b
52b
125
70b
122
130
130
76b
60b
46b
62b
42b
74b
20b
76b
128
128
126
48b
72b

FIG. 7

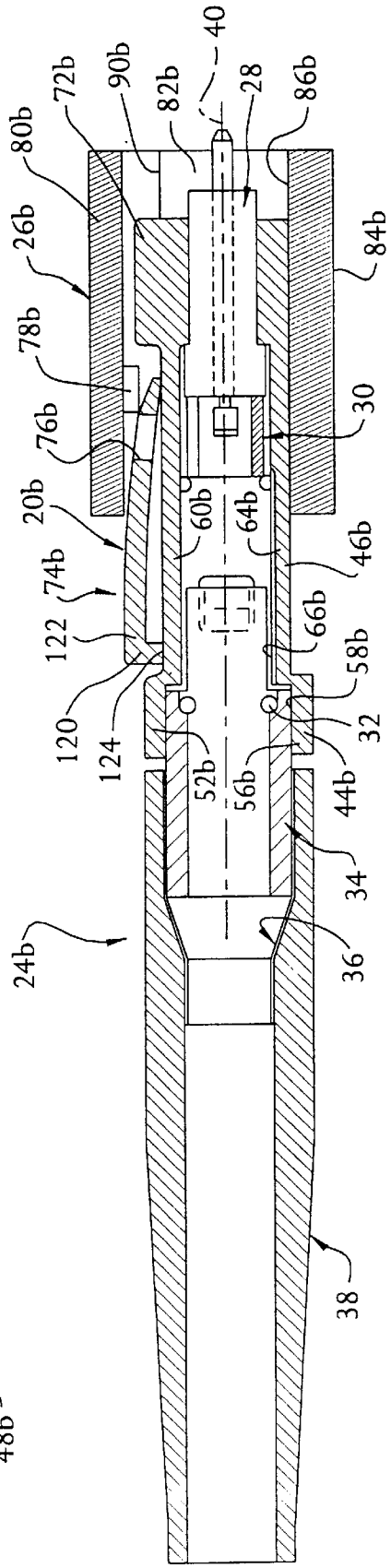
40
72b
90b
82b
28
86b
80b
26b
84b
78b
30
76b
20b
60b
64b
46b
74b
122
66b
58b
120
124
32
52b
56b
44b
34
24b
36
38

FIG. 8

# PLUG HOUSING WITH ATTACHED CANTILEVERED LATCH FOR A FIBER OPTIC CONNECTOR

## BACKGROUND OF THE INVENTION

The present invention relates generally to connectors preferably for use with fiber optics, and more specifically relates to a novel latch structure for mounting a connector to a receptacle.

Fiber optic technology presents several advantages which cannot be provided by other technologies. For example, fiber optic communication systems provide immunity from electromagnetic interference (EMI), provide virtually unlimited bandwidth, and provide that data can be quickly transferred over long distances.

Typically, connectors are used within optical fiber communication systems. For example, connectors are used to join optical fibers together to form a longer length or to connect an optical fiber to a device. Generally, a connector must provide that the end of one optical fiber becomes axially aligned with the end of another optical fiber. As a result, after the connection is made, all of the light from one optical fiber can travel into the other optical fiber. Because optical fibers are extremely small and because it is important that no data be lost at the point at which two optical fibers are joined, it is important that a connector be able to join two optical fibers with a relatively high amount of accuracy and precision.

Fiber optic connectors are often used in environments where there are many loose and/or hanging wires, such as copper conductor wires or other optical fibers. Examples of such environments include a patch panel, a patch enclosure and an electrical closet. Within environments such as these, it is advantageous to provide a connector which is not prone to entanglement on the wires. Entanglement with wires during connection or disconnection of a connector can provide that the wires become damaged or some portion of the connector becomes damaged.

Fiber optic connectors are also often used in high-traffic environments, such as on a desktop. Using a connector to connect optical fibers within a high-traffic environment requires that the connector be durable enough to withstand the environment.

It is desirable to be able to terminate an optical fiber in the field rather than having to be terminated in the factory into specific lengths of patch cords. By providing that a connector can be terminated in the field, project estimates need not assume much longer fiber optic cables in order to ensure that the cables will be long enough during actual installation.

Of course, it is also desirable to provide a connector where the connector includes as few parts as possible and is relatively inexpensive to produce.

The present invention provides a novel structure for mounting a connector to a receptacle which features and advantages thereof will become apparent upon a reading of the attached specification in combination with a study of the drawings.

## OBJECTS AND SUMMARY OF THE INVENTION

It is a general object of the present invention to provide a novel latch structure on a plug housing, such plug housing forming part of a connector, for mounting a connector to a receptacle, such connector being used to terminate a fiber optical cable.



An object of the present invention is to provide a plug housing in a connector, such plug housing having a novel latch structure thereon which is ideal for use in environments where loose and/or hanging wires often can be found, such as on a patch panel, in a patch enclosure or in an electrical closet.

Another object of the present invention is to provide a plug housing having a novel latch structure thereon in a connector, such connector being used to terminate an optical fiber, and such latch structure not being prone to entanglement with loose and/or hanging wires during engagement or disengagement of the connector.

Still yet another object of the present invention is to provide a novel latch structure for a connector which is durable and not prone to breaking during use.

Briefly, and in accordance with the foregoing, the present invention discloses a novel forward-facing, aft-attached cantilever beam which is provided as a latch structure on a plug housing for securing a fiber optic connector to a receptacle. The beam has engagement structure on its free end which attaches to retention structure within the receptacle. The plug housing has a forward end and a rearward end and an axial passageway therethrough through which at least one optical fiber provided in the fiber optic cable extends. The forward end is inserted into the receptacle with the rearward end extending from the receptacle. The cantilevered beam has an end fixed to a rearward portion of the plug housing and its free end extends forwardly toward the forward end of the plug housing. To engage the connector with the receptacle, the connector is slid into an axial passageway through the receptacle, whereupon the cantilevered beam is biased toward the top wall of the plug housing upon engagement with the receptacle. Once fully inserted, the engagement structure on the cantilevered beam engages retention structure in the receptacle. The connector can be released from engagement with the receptacle by biasing the cantilevered beam toward the top wall of the plug housing such that the engagement structure on the beam is released from the retention structure of the receptacle and thereafter, pulling the connector out of the receptacle.

The retention structure of the receptacle may be formed as an aperture through a wall of the receptacle and the engagement structure on the cantilevered beam may be formed as a protrusion which is adapted for engagement within the aperture. Alternatively, the retention structure of the receptacle may be formed as at least one protrusion within the axial passageway of the receptacle and the engagement structure on the cantilevered beam may be formed as at least one notch in the beam which is adapted for engagement with the protrusion within the receptacle.

## BRIEF DESCRIPTION OF THE DRAWINGS

The organization and manner of the structure and operation of the invention, together with further objects and advantages thereof, may best be understood by reference to the following description, taken in connection with the accompanying drawings, wherein like reference numerals identify like elements in which:

FIG. **1** is an exploded perspective view of the components of a connector, including a plug housing, which is used to mount a fiber optic cable to a receptacle which incorporates the features of an embodiment of the invention;

FIG. **2** is an enlarged perspective view of the plug housing shown in FIG. **1**;

FIG. **3** is an assembled, cross-sectional of the connector shown in FIG. **1**, partially inserted into a receptacle which is shown in cross-section;

FIG. **4** is an assembled, cross-sectional of the connector shown in FIG. **1**, fully inserted into the receptacle which is shown in cross-section;

FIG. **5** is an enlarged perspective view of an alternate embodiment of the plug housing which incorporates the features of the invention;

FIG. **6** is an assembled, cross-sectional of the connector with the alternate embodiment of the plug housing as shown in FIG. **5**, partially inserted into a receptacle which is shown in cross-section;

FIG. **7** is a enlarged perspective view of another alternate embodiment of the plug housing which incorporates the features of the invention; and

FIG. **8** is an assembled, cross-sectional of the connector with the alternate embodiment of the plug housing as shown in FIG. **7**, partially inserted into a receptacle which is shown in cross-section.

## DETAILED DESCRIPTION OF THE ILLUSTRATED EMBODIMENT

While the invention may be susceptible to embodiment in different forms, there is shown in the drawings, and herein will be described in detail, specific embodiments with the understanding that the present disclosure is to be considered an exemplification of the principles of the invention, and is not intended to limit the invention to that as illustrated and described herein.

As shown in the drawings, the present invention provides a novel latch structure **20** for a plug housing **22** which is provided a component of a fiber optic connector **24**. A first embodiment of the novel latch structure **20** provided on the plug housing **22** is shown in FIGS. **1–4**; a second embodiment of the novel latch structure **20***a* provided on the plug housing **22***a* is shown in FIGS. **5** and **6**; a third embodiment of the novel latch structure **20***b* provided on the plug housing **22***b* is shown in FIGS. **7** and **8**. Like elements of the plug housings **22**, **22***a*, **22***b* are labeled with like reference numerals, with the elements of the second embodiment having the suffix "a" after the reference numeral and the elements of the third embodiment having the suffix "b" after the reference numeral. The first and second embodiments of the latch structure **20**, **20***a* are "high profiles latches and the third embodiment of the latch structure **20***b* is a "low profile" latch.

The plug housing **22** is one component in the connector **24**, such connector **24** being mounted to a receptacle **26** as described herein and which is used to terminate a conventional fiber optic cable (not shown). As will be appreciated from a study of the drawings, especially FIGS. **3**, **4**, **6** and **8**, only one side of the connection is shown. One of ordinary skill in the art will recognize that the receptacle **26** is mounted in or to a member, such as a wall, and has a like receptacle **26** mounted on the other side of the member for terminating a like fiber optic cable with a like connector **24** such that the ends of the optical fibers in the fiber optic cables can be connected together so that data, in the form of light, can be transmitted. It will also be appreciated that the connector **24**, which incorporates the novel features of the present invention, can be used to terminate copper wires, however, the description herein describes the connector **24** for use in terminating fiber optic cables.

The fiber optic cable (not shown) which is terminated by the present connector **24** is known in the art. Fiber optic cables may be a pair of thin channels or optic fibers which are formed of glass. The thin glass fibers are typically coated with layers of ultraviolet-curable materials for protection. The coated fibers are then covered with a thermoplastic having sufficient stiffness to preclude fiber buckling. Strength yarns or other suitable strength members surround the coated and covered fibers to withstand tensile forces, which can be caused by pulling on the fiber optic cable, which could otherwise break the fibers. Suitable strength yarns may be made of fibrous aramid material. An outer jacket, which may be made of polyvinyl chloride, surrounds the coated and covered fibers and the strength yarns.

The connector **24** includes a plurality components and specifically, includes the plug housing **22**, **22***a*, **22***b*, a ferrule member **28**, a U-shaped guide pin clip **30**, a cylindrical, coiled compression spring **32**, a spring push member **34**, a crimpable eyelet **36** and a strain relief boot **38**. As shown in FIGS. **3**, **4**, **6** and **8**, a forward end of each component of the connector **24** is on the right and a rearward end of each component of the connector **24** is on the left. A central axis of the connector **24** is provided along line **40**. The ferrule member **28** and the guide pin clip **30** are mounted within a forward portion of the plug housing **22**, **22***a*, **22***b* and the ferrule member **28** extends outwardly from a front end of the plug housing **22**, **22***a*, **22***b*. The front portion of the spring push member **34** is mounted to a rear portion of the plug housing **22**, **22***a*, **22***b* and the compression spring **32** is mounted within the plug housing **22**, **22***a*, **22***b* between the spring push member **34** and the guide pin clip **30**. A rear portion of the spring push member **34** extends outwardly from the rear end of the plug housing **22**, **22***a*, **22***b*. A forward portion of the crimpable eyelet **36** is mounted on a rear portion of the spring push member **34** and finally, a forward portion of the strain relief boot **38** overlaps and covers the crimpable eyelet **36**. The specifics of the guide pin clip **30**, the spring push member **34**, the crimpable eyelet **36** and the strain relief boot **38** are known in the art. The crimpable eyelet **36** and the strain relief boot **38** are used to connect the fiber optic cable to the connector **24** in a manner known in the art. As such, each component of the connector **24** is only generally described herein.

Attention is now directed to FIGS. **2**, **5** and **7** for an explanation of the structure of the plug housing **22**, **22***a*, **22***b*. For ease in description, the general structure of the plug housing **22**, **22***a*, **22***b*, with the exception of the novel latch structure **20**, **20***a*, **20***b*, is described with respect to the first embodiment of the plug housing **22** shown in FIGS. **1–4** with the understanding that the other embodiments of the plug housing **22***a*, **22***b* are the same. The plug housing **22** is formed from a thermoplastic member **42** which includes a base portion **44** integrally formed with a portion **46** which extends therefrom. A front end of the plug housing **22** is defined at **48** and a rear end of the plug housing **22** is defined at **50**. The terms "forward" and "rearward" are defined in this manner because the forward end of the plug housing **22** is defined as the end which is first inserted into the receptacle **26**.

The base portion **44** has a top wall **52**, opposite side walls **54** (only one of which is shown) and a bottom wall **56**. The top and bottom walls **52**, **56** are spaced apart from each other, and the side walls **54** are spaced apart from each other, to define a rectangular axial passageway **58** through the base portion **44**.

The extending portion **46** is generally rectangularly-shaped and has a top wall **60**, opposite side walls **62** and a bottom wall **64**. The top and bottom walls **60**, **64** are spaced apart from each other, and the side walls **62** are spaced apart from each other, to define a rectangular axial passageway **66** through the extending portion **46**, such rectangular axial passageway **66** being aligned with the rectangular axial

passageway **58** through the base portion **44**. A shoulder **68** is formed along a portion of the rectangular axial passageway **66** to define a smaller portion of the extending portion axial passageway **66**. An aperture **70** is provided through each of the side walls **62** along a rear portion of the extending portion **46**.

The top and bottom walls **52**, **56** of the base portion **44** are spaced further apart from each other than the top and bottom walls **60**, **64** of the extending portion **46** such that the axial passageway **58**, while in alignment with the axial passageway **66**, is larger than the axial passageway **66**. The base portion **44** is formed at the rear end of the plug housing **22** such that the extending portion **46** extends forwardly therefrom.

A key **72** is integrally formed on the top wall **60** of the extending portion **46** proximate to the forward end **48** thereof for reasons described herein. The key **72** is generally rectangular-shaped and protrudes upwardly from the extending portion top wall **60**.

Now that the generalities of the plug housing **22**, **22***a*, **22***b* have been described, the specifics of each embodiment of the novel latch structure **20**, **20***a*, **20***b* is described. The latch structure **20**, **20***a*, **20***b* can be integrally formed with the member **42**, or can be provided as a separate member made out of metal or plastic which is suitably mounted on the member **42**. The latch structure **20**, **20***a*, **20***b* is made out a material which has "memory", that is, it can be biased under the application of force and will return to its initial shape when the force is removed. The high profile embodiments of the latch structure **20**, **20***a* engage with a different type of receptacle **26** than the low profile embodiment of the latch structure **20***b* as described herein.

Generally, each embodiment of the latch structure **20**, **20***a*, **20***b* provides a forward-facing, aft-attached cantilever beam **74**, **74***a*, **74***b*. The beam **74**, **74***a*, **74***b* has engagement structure **76**, **76***a*, **76***b* on its free end which engages with retention structure **78** of the receptacle **26**.

Attention is now directed to FIGS. **2**–**4** which illustrates the first embodiment of the plug housing **22** which has an embodiment of the high profile latch structure **20** thereon, and the receptacle **26** in which the connector **24** is mounted.

The receptacle **26** is rectangular-shaped and has a top wall **80**, opposite side walls **82** and a bottom wall **84**. The top and bottom walls **80**, **84** are spaced from each other and the side walls **82** are spaced from each other so as to define a rectangularly-shaped axial passageway **86** which extends through the receptacle **26**. The retention structure **78** takes the form of a retention aperture provided through the top wall **80** of the receptacle **26** for acceptance of the engagement member **76** on the latch structure **20**. A keyway **90** is provided in a forward end of the receptacle passageway **86** for acceptance of the key **72** as described herein.

The latch structure **20** is formed from a forward extending, aft-mounted cantilevered beam **74**. The beam **74** is formed from a first, flat portion **92** having forward and rearward opposite ends, a second, generally arcuate portion **94** having forward and rearward opposite ends, and a third, elongated, flat portion **96** having forward and rearward opposite ends. The first portion **92** is provided on the top wall **52** of the base portion **44** and may be integrally formed therewith or may be formed as a separate member and suitably mounted thereon. In addition, the first portion **92** may be provided on the top wall **60** of the extending portion **46**. The rearward end of the second, arcuate portion **94** is integrally formed with the forward end of the first portion **92**; the rearward end of the third portion **96** is integrally formed with the forward end of the second, arcuate portion **94**. Thus, the second, arcuate portion **94** and the third, flat portion **96** extend freely forward toward the front end **48** of the plug housing **22** over the extending portion **46**. That is to say, the second and third portions **94**, **96** of the beam **74** can be biased toward the top wall **60** of the extending portion **46**. When not connected with the receptacle **26**, the beam **74** may have a bias which is slightly away from the top surface **60** of the extending portion **46**.

The engagement structure **76** is formed as a protrusion on the forwardmost end of the beam third portion **96**. Specifically, the protrusion **76** has a first surface **98** which is generally perpendicular to the top surface of the third portion **96**, a second surface **100** which is generally perpendicular to the first surface **98**, and a ramped third surface **102** which inclines downwardly from the forward end of the second surface **100** to the underside of the beam **74**.

The key **72** provided on the extending portion top wall **60** is spaced slightly forward of the forwardmost end of the beam **74**.

To engage the plug housing **22** with the receptacle **26**, the forward end of the plug housing **22** is inserted within the receptacle passageway **86** such that the bottom wall **64** of the extending portion **46** slides along the interior of the bottom wall **84**. When the beam **74** comes into contact with the top wall **80** of the receptacle **26**, the beam **74** flexes toward the top wall **60** of the extending portion **46**. The ramped surface **102** of the protrusion **76** encourages the biasing of the beam **74** toward the top wall **60**. The portion **104** of the receptacle top wall **80** which initially comes into contact with the ramped surface **102** may be beveled so as to promote the biasing of the beam **74**. As the plug housing **22** is moved further into the receptacle **26**, the second surface **100** of the protrusion **76** slides along the interior of the top wall **80**, see FIG. **3**, until the protrusion **76** engages the retention aperture **78** through the receptacle top wall **80**, see FIG. **4**. Once the protrusion **76** encounters the retention aperture **78**, the beam **74** flexes and moves away from the extending portion top wall **60** as a result of the memory in the beam material and the protrusion **76** engages within the retention aperture **78**. Specifically, surface **98** of the protrusion **76** engages the rear wall of the aperture **78**. This locks the plug housing **22** into place within the receptacle **26** under an axial load. The top and bottom walls **80**, **84** of the receptacle **26** are spaced slightly closer together than the distance between the bottom surface of the extending portion **46** and the top surface of the beam **74** in its initial position so that a tight interconnection is provided.

To disengage this embodiment of the high profile plug housing **22** from the receptacle **26**, the user presses on a deflector **132** on the beam **74** which causes the beam **74** to flex and move toward the extending portion top surface **60**. Once the protrusion **76** is completely disengaged from the retention aperture **78**, the plug housing **22** can be easily and freely pulled out of the receptacle **26**.

Attention is now directed to FIGS. **5** and **6** which illustrates the second and preferred embodiment of the plug housing **22***a* which also has an embodiment of the high profile latch structure **20***a* thereon, and the receptacle **26** in which the connector **24***a* is mounted. The receptacle **26** in the second embodiment is identical to that of the first embodiment and therefore, identical reference numerals are used in the drawings and the description is not repeated. The member **42***a* is identical to the member **42** in the first embodiment.

The latch structure **20***a*, like the first embodiment, is formed from a forward extending, aft-mounted cantilevered

beam **74***a*. The beam **74***a* is formed from an arcuate portion which includes first and second portion **108**, **110** and a flat portion **112** extending therefrom. The first portion **108** is inclined and has forward and rearward opposite ends. The second portion **110** is vertical and has first and second opposite ends. The flat portion **112** has forward and rearward opposite ends. The rearward end of the first portion **108** is secured to the top wall **52***a* of the base portion **44***a* at point of attachment **116** and may be integrally formed therewith or may be formed as a separate member and suitably mounted thereon. In addition, the first portion **108** may be provided on the top wall **60***a* of the extending portion **46***a*. The first portion **108** inclines from the point of attachment **116** upwardly and forwardly to the forward end thereof. The first end of the second, vertical portion **110** is integrally formed with the forward end of the first portion **108** and extends downwardly therefrom toward the top wall **60***a* such that the second end of the second portion **110** is proximate to the top wall **60***a*; the rearward end of the flat portion **112** is integrally formed with the second end of the second, vertical portion **110**. Thus, except for the point of attachment **116**, the beam **74***a* extends freely forward toward the front end **48***a* of the plug housing **22***a* over the extending portion **46***a*. That is to say, except for the point of attachment **116**, the beam **74***a* can be biased toward the top wall **60***a* of the extending portion **46***a*. When not connected with the receptacle **26**, the beam **74***a* may have a bias which is slightly away from the top surface **60***a* of the extending portion **46***a*. A projection **107** is provided on the bottom surface of flat portion **112**.

Like that of the first embodiment, the engagement structure **76***a* is formed as a protrusion on the forwardmost end of the beam flat portion **112**. The protrusion **76***a* is identical in structure to that described in the first embodiment and thus a description of the structure is not repeated herein.

The key **72***a* provided on the extending portion top wall **60***a* is spaced slightly forward of the forwardmost end of the beam **74***a*.

To engage the plug housing **22***a* with the receptacle **26**, the forward end of the plug housing **22***a* is inserted within the receptacle passageway **86** such that the bottom wall **64***a* of the extending portion **46***a* slides along the interior of the bottom wall **84**. When the beam **74***a* comes into contact with the top wall **80** of the receptacle **26**, the beam **74***a* flexes toward the top wall **60***a* of the extending portion **46***a*. The ramped surface **102***a* of the protrusion **76***a* encourages the biasing of the beam **74***a* toward the top wall **60***a*. As the plug housing **22***a* is moved further into the receptacle **26**, the second surface **100***a* of the protrusion **76***a* slides along the interior of the top wall **80**, see FIG. **6**, until the protrusion **76***a* engages the retention aperture **78** through the receptacle top wall **80**. Once the protrusion **76***a* encounters the retention aperture **78**, the beam **74***a* flexes and moves away from the extending portion top wall **60***a* as a result of the memory in the beam material and the protrusion **76***a* engages within the retention aperture **78**. Specifically, surface **98***a* of the protrusion **76***a* engages the rear wall of the aperture **78**. This locks the plug housing **22***a* into place within the receptacle **26** under an axial load. The top and bottom walls **80**, **84** of the receptacle **26** are spaced slightly closer together than the distance between the bottom surface of the extending portion **46***a* and the top surface of the beam **74***a* in its initial position so that a tight interconnection is provided. If a user attempts to move the beam **74***a* too close to the top wall **60**, the projection **107** will contact the top wall **60** to prevent the beam **74***a* from being over-stressed.

To disengage this embodiment of the high profile plug housing **22***a* from the receptacle **26**, the user presses on the first portion **108** of the beam **74***a* which causes the beam **74***a* to flex and move toward the extending portion top surface **60***a*. The first portion **108** has a plurality of raised protuberances **114** against which a user's thumb, finger, or equivalent tool can engage. Once the protrusion **76***a* is completely disengaged from the retention aperture **78**, the plug housing **22***a* can be easily and freely pulled out of the receptacle **26**.

Attention is now directed to FIGS. **7** and **8** which illustrates the third embodiment of the plug housing **22***b* which has the low profile latch structure **20***b* thereon, and the receptacle **26***b* in which the connector **24***b* is mounted.

The receptacle **26***b* is rectangular-shaped and has a top wall **80***b*, opposite side walls **82***b* and a bottom wall **84***b*. The top and bottom walls **80***b*, **84***b* are spaced from each other and the side walls **82***b* are spaced from each other so as to define a rectangularly-shaped axial passageway **86***b* which extends through the receptacle **26***b*. The retention structure **78***b* is formed as a pair of rectangularly-shaped retention protrusions (only one of which is shown in the cross-sectional view of FIG. **8**) are provided in the passageway **86***b* at predetermined positions. The retention protrusions **78***b* extend from the top wall **80***b* into the passageway **86***b*. A keyway **90***b* is provided in a forward end of the receptacle passageway **86***b*.

The latch structure **20***b*, like that of the first and second embodiments, is formed from a forward extending, aft-mounted cantilevered beam **74***b*. The beam **74***b* is formed from a first, vertical portion **120** having first and second opposite ends and a second, horizontal portion **122** having forward and rearward opposite ends. The first end of the first portion **120** is secured to the top wall **60***b* of the extending portion **46***a* at point of attachment **124** and may be integrally formed therewith or may be formed as a separate member and suitably mounted thereon. The first end of the first portion **120** may also be provided on the top wall **60***a* of the extending portion **46***a*. The first portion **120** extends vertically from the point of attachment **124** to the second end thereof. The rearward end of the second portion **122** is integrally formed with the second end of the first portion **120**. The forward end surface **126** of the second portion **120** is ramped such that the end surface **126** inclines downwardly to the underside of the beam **74***b*. Thus, except for the point of attachment **124**, the beam **74***b* extends freely forward toward the front end **48***b* of the plug housing **22***b* over the extending portion **46***b*. That is to say, except for the point of attachment **124**, the beam **74***b* can be biased toward the top wall **60***b* of the extending portion **46***b*. When not connected with the receptacle **26***b*, the beam **74***b* may have a bias which is slightly away from the top surface **60***b* of the extending portion **46***b*.

In the low profile embodiment of the latch structure **20***b*, the engagement structure **76***b* is formed as a pair of notches in the forward end of the beam second portion **122** rearward of the ramped end surface **126**. The notches **76***b* define a portion of the second portion **122** which has a lesser width than the remainder of the second portion **122**. Each notch **76***b* defines forward and rearward shoulders **128**, **130**, respectively, therein. As best shown in FIG. **7**, the beam **74***b* has generally a "t" shape.

The key **72***b* provided on the top wall **60***b* of the extending portion **46***b* is spaced slightly forward of the forwardmost end of the beam **74***b*.

To engage the low profile plug housing **22***b* with the receptacle **26***b*, the forward end of the plug housing **22***b* is inserted within the receptacle passageway **86***b* such that the

bottom wall **64***b* of the extending portion **46***b* slides along the interior of the receptacle bottom wall **84***b*. When the ramped end surface **126** of the beam **74***b* comes into contact with the retention protrusions **78***b* within the receptacle passageway **86***b*, the beam **74***b* flexes toward the extending portion top wall **60***b*. The ramped end surface **126** encourages the biasing of the beam **74***b* toward the top wall **60***b*. Once the ramped end surface **126** travels past the retention protrusions **78***b* and the retention protrusions **78***b* encounter the engagement notches **76***b*, the beam **74***b* flexes and moves away from the top wall **60***b* of the extending portion **46***b* as a result of the memory in the beam material so as to engage the retention protrusions **78***b* within the notches **76***b*. That is, the shoulder **128** in each notch **76***b* engages the forward surface of each retention protrusion **78***b* within the receptacle **26***b*. This retains the plug housing **22***b* within the receptacle **26***b* under an axial load. The inwardmost surfaces of the retention protrusions **78***b* and the interior of the bottom wall **64***b* are spaced closer together than the distance between the bottom surface of the extending portion **46***b* and the top surface of the beam **74***b* in its initial position so that a tight interconnection is provided when the plug housing **22***b* is fully inserted into the receptacle **26***b*. Because the beam **74***b* engages the retention protrusions **78***b* within the passageway **86***b*, the height of the plug **22***b* can be minimized. The forward end of the beam **74***b* can enter into the keyway **90***b*.

To disengage the low profile plug housing **22***b* from the receptacle **26***b*, the user presses on the second portion **122** of the beam **74***b* which causes the beam **74***b* to flex and move toward the top surface **60***b* of the extending portion **46***b*. Once the beam **74***b* is flexed sufficiently toward the top surface **60***b*, the retention protrusions **78***b* completely disengage from within the notches **76***b* and the plug housing **22***b* can be easily and freely pulled out of the receptacle **26***b*.

An advantage in this low profile embodiment of the plug housing **22***b* is that the outer wall of the receptacle **26***b* is solid which deters the entry of contaminants therein.

The deflector **132** may be provided on the beam **74**, **74***b* in the first or third embodiments, (only shown in the first embodiment in the drawings), and is mounted on the freely extending portion of the beam **74**, **74***b*. To release the plug housing **22**, **22***b*, the user presses on the deflector **132** which causes the beam **74**, **74***b* to flex and move toward the extending portion top surface **60**, **60***b*. Once the engagement structure **76**, **76***b* is completely disengaged from the retention structure **78**, **78***b*, the plug housing **22**, **22***b* is easily pulled out of the receptacle **26**, **26***b*.

In each embodiment, the receptacle **26**, **26***b* can be made as a single piece molding having the retention structure **78**, **78***b* located in association with the top wall **80**, **80***b* or in association with the bottom wall **84**, **84***b* thereof. The single piece construction eliminates assembly operations. Additionally, this allows for the mounting the plug housing **22**, **22***a*, **22***b* therewithin with the latch structure **20**, **20***a*, **20***b* facing upwardly or facing downwardly. Thus, if a fiber optic cable, having first and second channels, is mounted within the connector **24**, **24***a*, **24***b* and receptacle **26**, **26***b* as shown in the drawings, the other fiber optic cable will be flipped such that the beam on the other connector faces downwardly and the retention structure is provided through the bottom wall of the other receptacle. This allows the number one channel of the fiber optic cable which would be mounted in the connector **24**, **24***a*, **24***b* shown in the drawings to be directly connected to the number one channel of the other fiber optic cable and, likewise, the number two channel of the fiber optic cable which is mounted in the connector **24**, **24***a*, **24***b* shown in the drawings to be directly connected to the number two channel of the other fiber optic cable. That is to say, the connectors would be "flipped" with respect to each other. Alternatively, the retention structures can be provided in association with the top wall of each receptacle such that the connectors are "fed through". In order to connect the number one channel of the fiber optic cable which is mounted in the connector **24**, **24***a*, **24***b* shown in the drawings to the number one channel of the other fiber optic cable fiber and to connect the number two channel of the fiber optic cable which is mounted in the connector **24**, **24***a*, **24***b* shown in the drawings to be directly connected to the number two channel of the other fiber optic cable, the channels must crossed. It should be seen that the receptacle used in the present invention is capable of accepting forward-mounted or aft-mounted latch structures.

Moreover, in each embodiment, when the plug housing **22**, **22***a*, **22***b* is inserted into the receptacle **26**, **26***b*, the key **72**, **72***a*, **72***b* slides along and is seated within the receptacle keyway **90**, **90***b*. If the receptacle **26**, **26***b* is formed in a board which has other wires thereon, which other wires may not be fiber optic cables, the key **72**, **72***a*, **72***b* acts as a shroud and prevents tangling of the other wires with the latch structure **20**, **20***a*, **20***b* and prevents the wires from becoming engaged underneath the latch structure **20**, **20***a*, **20***b* because the key **72**, **72***a*, **72***b* moves the other wires out of the way. Therefore, the key **72**, **72***a*, **72***b* acts as a shroud to prevent the entanglement of the other wires with the latch structure **20**, **20***a*, **20***b*.

Because the profile of the latch structure **20**, **20***a*, **20***b* varies, high lateral compliance and concurrently high axial stiffness are achieved. The longitudinal portions of the latch structure **20**, **20***a*, **20***b* have a relative small moment of inertia cross-section, whereas transverse portions of the latch structure **20**, **20***a*, **20***b* have a large moment of inertia cross-section.

A general description of the remainder of the connector **24**, **24***a*, **24***b* is now described with respect to the first embodiment with the understanding that the other embodiments have identical structures.

The ferrule **28** may be a conventional MT ferrule member mounted within the smaller portion of the extending portion axial passageway **66**. The ferrule **28** is formed from glass, plastic, metal or ceramic and has a base portion and a portion which extends forwardly therefrom. The base portion has a top surface, a first side surface, a second side surface and a bottom surface. The extending portion is generally rectangularly-shaped and has a top surface, a first side surface, a second side surface and a bottom surface. The top and bottom surfaces of the base portion are spaced apart from each other further than the top and bottom surfaces of the extending portion are spaced apart from each other, and the side surfaces of the base portion are spaced apart from each other further than the side surfaces of the extending portion are spaced apart from each other. A polished, flat end surface is provided on the forward end of the ferrule member **28** for abutting against the end surface of another ferrule member in a typical interconnection. A pair of axial outer bores are provided through the ferrule member **28**. Such outer bores are respectively proximate to the side walls of the ferrule member **28**. A pair of axial, inner bores are provided through the ferrule member **28** at a position between the outer bores. The outer bores respectively accept a guide pin therethrough and the guide pins extend outwardly from the forward end of the ferrule member **28**. The inner bores respectively accept a channel of the fiber optic cable therethrough. When the ferrule member **28** is mounted

within the plug housing **22**, the base portion thereof seats within the larger portion of the axial passageway **66** and the extending portion seats within the smaller portion of the axial passageway **66**. A front portion of the ferrule member **28**, which has the end surface, extends slightly forwardly from the front end **48** of the plug housing **22**. Alternatively, the ferrule member **28** can be a single fiber mounting member.

The U-shaped guide pin clip **30** is formed from plastic and includes opposite side walls and a bottom wall which connects the side walls together. As shown in FIGS. **3** and **4**, the guide pin clip **30** is mounted within the larger portion of the axial passageway **66** through the extending portion **46** and is used to retain the rearward ends of the guide pins in place through the ferrule member **28**. When the guide pin clip **30** is mounted within the passageway **66**, the side walls of the guide pin clip **30** are proximate to the side walls of the axial passageway **66** and the bottom wall of the guide pin clip **30** is proximate to the bottom wall of the passageway **66**. The clip **30** abuts against the rear end of the ferrule member **28**.

The spring push member **34** is formed from plastic and includes a cylindrical portion, a rectangular portion integrally formed therewith and a pair of cantilevered arms extending from the rectangular portion. The arms are spaced apart from each other. Each arm has a latch member protruding outwardly therefrom which engages with the respective apertures provided through the side walls of the connector. An aligned axial passageway is formed through the cylindrical portion and the rectangular portion. The arms are positioned on the rectangular portion such that the axial is not blocked.

As shown in the cross-sectional drawings, the coiled spring **32** is mounted between the spring push member **34** and the guide pin clip **30**. The front end of the spring **32** abuts against the guide pin clip **30** and the rear end of the spring **32** is positioned between the arms of the spring push member **34** and engages against the rectangular portion thereof. To mount the spring push member **34** to the plug housing **22**, the arms are pushed into the rear end of the plug housing **22** until the latches on the arms engage within the apertures **70** in the extending portion side walls **62**. The axial passageway through the spring push member **34** aligns with the axial passageway **66** through the plug housing **22**. The apertures **70** in the side walls are larger than the latches so as to allow the latches to move therewithin and thus, to allow the spring push member **34** to slide relative to the plug housing **22**. The spring push member **34** pushes on the spring **32**, which in turn, pushes on the guide pin clip **30** and the ferrule member **28**. This provides for a "floating" design of the ferrule member **28** and provides for a forward bias on the fiber optic cable when mounted in the connector **24** as described herein such that the optical fibers in the fiber optic cable will maintain a physical connection with the optical fibers in the other fiber optic cable (not shown) as is known in the art. While a coiled spring **32** is disclosed herein, it is to be understood that other forward biasing means can be provided.

The crimpable eyelet **36** is formed from a thin frusto-conical wall which has a first thin, cylindrical wall integrally formed at its forward end and a second thin, cylindrical wall integrally formed at its forward end. The first cylindrical wall has a larger diameter than the second cylindrical wall such that the frusto-conical wall tapers from its forward end to its rearward end. An axial passageway is formed through the eyelet **36** and has a first cylindrical portion within the first wall, a frusto-conical portion within the frusto-conical portion thereof and a second cylindrical portion within the second wall. The first portion has a larger diameter than the second portion that the frusto-conical portion of the passageway tapers from its forward end to its rearward end. The larger diameter first wall is crimped onto the cylindrical portion of the spring push member **34** to maintain the engagement of the crimpable eyelet **36** with the spring push member **34**.

The strain relief boot **38** is formed from a suitably compliant material which can be repeatedly bent in a limited bend radius so as to protect the optic fibers in the fiber optic cable mounted therein. Such a suitable material is thermoplastic elastomer. The boot **38** also provides strain relief for the fiber optic cable. The boot **38** is formed from a forward cylindrical portion and a rearward frusto-conical portion. The portions are integrally formed with each other. An axial passageway is formed through the strain relief boot **38**. A forward portion of the axial passageway is cylindrical, a middle portion of the axial passageway is frusto-conical and a rearward portion of the axial passageway is cylindrical. The cylindrical portion of the crimpable eyelet **36** is mounted within the cylindrical portion of the axial passageway of the strain relief boot **38** and the frusto-conical portion of the crimpable eyelet **36** is mounted within the frusto-conical portion of the axial passageway of the strain relief boot **38**. The cylindrical portion and the frusto-conical portion of the crimpable eyelet **36** and the cylindrical portion and the frusto-conical portion of the axial passageway of the strain relief boot **38** are identically formed so that a tight interconnection is provided between these components.

The crimpable eyelet **36** and the strain relief boot **38** are used to mount the fiber optic cable within the connector **24**. When a fiber optic cable is mounted to the connector **24**, the strength yarns in the fiber optic cable are compressively held between the crimpable eyelet **36** and the spring push member **34**. The jacket is cut back to expose the strength yarns and the optical fibers and the end of the jacket is compressively held by the crimpable eyelet **36** at the rearward end thereof between the crimpable eyelet **36** and the rearward end of the spring push member **34**. The optical fibers are stripped of their coating and covering and are extended through the aligned axial passageways in the spring push member **34** and the plug housing **22**, through the center of the U-shaped guide pin clip **30** and through the inner bores of the ferrule member **28** and out of the forward end thereof for connection to another fiber optic cable in a known manner. It is to be understood that instead of providing a crimpable eyelet **26**, a suitable adhesive can be used to join the strength yarns and/or the jacket of the fiber optic cable to the spring push member **34**.

While preferred embodiments of the present invention are shown and described, it is envisioned that those skilled in the art may devise various modifications of the present invention without departing from the spirit and scope of the appended claims.

The invention claimed is:

**1**. A connector comprising: a plug housing formed from a member having a forward end and a rearward end and an axial passageway therethrough through which at least one optical fiber provided in a fiber optic cable can extend, said member having at least a portion which is rectangularly-shaped, said rectangularly shaped portion having a top wall, opposite side walls and a bottom wall, said top wall being flat, said forward end of said member for insertion into a receptacle with said rearward end extending from the receptacle, and a cantilevered beam having an end fixed to a rearward portion of said member and having its free end

extending forwardly toward said forward end of said member over said flat top wall and being spaced from said flat top wall, said free end of said cantilevered beam being capable of being biased toward said flat top wall of said member, said cantilevered beam having engagement structure thereon for engaging retention structure associated with the receptacle for releasably securing said connector within the receptacle; a ferrule member mounted within said plug housing; and means for biasing said ferrule member toward said forward end of said plug housing member.

**2**. A connector as defined in claim **1**, wherein said engagement structure on said cantilevered beam comprises a protrusion which is adapted for engagement within an aperture through a wall of the receptacle.

**3**. A connector as defined in claim **1**, wherein said engagement structure on said cantilevered beam comprises at least one notch in said beam which is adapted for engagement with a corresponding protrusion in the receptacle.

**4**. A connector as defined in claim **1**, further including a key provided on said member and adapted for insertion into a keyway in the receptacle, said key projecting from said member and being positioned on said member proximate to said member forward end and spaced from said free end of said cantilevered beam.

**5**. A connector as defined in claim **1**, wherein said cantilevered beam includes an arcuate portion and a flat portion which extends therefrom, said engagement structure being provided on a forward end of said flat portion.

**6**. A connector as defined in claim **1**, further including at least one raised protuberance on said cantilevered beam against which a user's thumb finger or equivalent tool can engage.

**7**. A connector as defined in claim **1**, further including a deflector provided on said cantilevered beam and adapted for manual actuation thereof to bias said beam toward said member.

**8**. A connector comprising: a plug housing formed from a member having a forward end and a rearward end and an axial passageway therethrough through which at least one optical fiber provided in a fiber optic cable can extend, said forward end of said member for insertion into a receptacle with said rearward end extending from the receptacle, a cantilevered beam having an end fixed to a rearward portion of said member and having its free end extending forwardly toward said forward end of said member, said free end of said cantilevered beam being capable of being biased toward said member, said cantilevered beam having engagement structure thereon for engaging retention structure associated with the receptacle for releasably securing said connector within the receptacle, and a key provided on said member and adapted for insertion into a keyway in the receptacle, said key projecting from said member and being positioned on said member proximate to said member forward end and being spaced from the free end of said cantilevered beam; a ferrule member mounted within said plug housing; and means for biasing said ferrule member toward said forward end of said plug housing member.

**9**. A connector as defined in claim **8**, wherein said engagement structure on said cantilevered beam comprises a protrusion which is adapted for engagement within an aperture through a wall of the receptacle.

**10**. A connector as defined in claim **8**, wherein said engagement structure on said cantilevered beam comprises at least one notch in said beam which is adapted for engagement with a corresponding protrusion in the receptacle.

**11**. A connector as defined in claim **8**, wherein said cantilevered beam includes an arcuate portion and a flat portion which extends therefrom, said engagement structure being provided on a forward end of said flat portion.

**12**. A connector as defined in claim **8**, further including at least one raised protuberance on said cantilevered beam against which a user's thumb finger or equivalent tool can engage.

**13**. A connector as defined in claim **8**, further including a deflector provided on said cantilevered beam and adapted for manual actuation thereof to bias said beam toward said member.

**14**. A connector comprising: a plug housing formed from a member having a forward end and a rearward end and an axial passageway therethrough through which at least one optical fiber provided in a fiber optic cable can extend, said forward end of said member for insertion into a receptacle with said rearward end extending from the receptacle, a cantilevered beam having an end fixed to a rearward portion of said member and having its free end extending forwardly toward said forward end of said member, said free end of said cantilevered beam being capable of being biased toward said member, and said cantilevered beam having at least one notch in said beam which is adapted for engagement with a corresponding protrusion in the receptacle for releasably securing said connector within the receptacle; a ferrule member mounted within said plug housing; and means for biasing said ferrule member toward said forward end of said plug housing member.

**15**. A connector as defined in claim **14**, wherein a key is provided on said member and adapted for insertion into a keyway in the receptacle, said key projecting from said member and being positioned on said member proximate to said member forward end and spaced from the forward end of said cantilevered beam.

**16**. A connector as defined in claim **14**, further including a deflector provided on said cantilevered beam and adapted for manual actuation thereof to bias said beam toward said member.

**17**. A connector comprising: a plug housing member having a forward end and a rearward end and an axial passageway therethrough through which at least one optical fiber provided in a fiber optic cable can extend, said forward end of said plug housing member for insertion into a receptacle with said rearward end extending from the receptacle, a cantilevered beam including an arcuate portion said beam having an end fixed to a rearward portion of said plug housing member and a flat portion which extends from said arcuate portion and defining a free end which extends forwardly toward said forward end of said plug housing member, a protrusion which is adapted for engagement within an aperture through a wall of a receptacle provided on said free end of said cantilevered beam for releasably securing said connector within the receptacle, said cantilevered beam being capable of being biased toward said plug housing member; a ferrule member mounted within said plug housing member; and means for biasing said ferrule member toward said forward end of said plug housing member.

**18**. A connector as defined in claim **17**, wherein said member has at least a portion which is rectangularly-shaped, said rectangularly shaped portion having a top wall, opposite side walls and a bottom wall, said top wall being flat, said free end of said cantilevered beam extending forwardly toward said forward end of said member over said flat top wall and being spaced from said flat top wall, said free end of said cantilevered beam being capable of being biased toward said flat top wall of said member.

**19**. A connector as defined in claim **17**, further including at least one raised protuberance on said arcuate portion of said cantilevered beam against which a user's thumb finger or equivalent tool can engage.

**20**. A connector as defined in claim **17**, further including a deflector provided on said arcuate portion of said cantilevered beam and adapted for manual actuation thereof to bias said beam toward said member.

**21**. A connector as defined in claim **17**, further including a key provided on said member and adapted for insertion into a keyway in the receptacle, said key projecting from said member and being positioned on said member proximate to said member forward end and spaced from the free end of said cantilevered beam.

**22**. A plug housing for a connector for terminating a fiber optic cable or other similar member, said plug housing comprising: a member having a forward end and a rearward end and an axial passageway therethrough through which at least one optical fiber provided in the fiber optic cable can extend, said forward end adapted for insertion into a receptacle with said rearward end extending from the receptacle, and a cantilevered beam having an end fixed to a rearward portion of said member and having its free end extending forwardly toward said forward end of said member, said free end of said cantilevered beam being capable of being biased toward said member, said cantilevered beam having engagement structure thereon for engaging retention structure associated with the receptacle for releasably securing said connector within the receptacle.

**23**. A plug housing as defined in claim **22**, wherein said engagement structure on said cantilevered beam comprises a protrusion which is adapted for engagement within an aperture through a wall of the receptacle.

**24**. A plug housing as defined in claim **22**, wherein said engagement structure on said cantilevered beam comprises at least one notch in said beam which is adapted for engagement with a protrusion in the receptacle.

**25**. A plug housing as defined in claim **22**, further including a key provided on said member and adapted for insertion into a keyway in the receptacle, said key projecting from said member and being positioned on said member proximate to said member forward end and spaced from the forward end of said cantilevered beam.

**26**. A plug housing as defined in claim **22**, wherein said cantilevered beam includes an arcuate portion and a flat portion which extends therefrom, said engagement structure being provided on a forward end of said flat portion.

**27**. A plug housing as defined in claim **22**, further including at least one raised protuberance on said cantilevered beam against which a user's thumb finger, or equivalent tool can engage.

**28**. A plug housing as defined in claim **22**, further including a deflector provided on said cantilevered beam and adapted for manual actuation thereof to bias said beam toward said member.

* * * * *