US008858534B2

(12) **United States Patent**
Adahan

(10) **Patent No.: US 8,858,534 B2**
(45) **Date of Patent: *Oct. 14, 2014**

(54) **WOUND CLOSURE AND DRAINAGE SYSTEM**

(71) Applicant: **Carmeli Adahan**, Jerusalem (IL)

(72) Inventor: **Carmeli Adahan**, Jerusalem (IL)

(*) Notice: Subject to any disclaimer, the term of this patent is extended or adjusted under 35 U.S.C. 154(b) by 0 days.

This patent is subject to a terminal disclaimer.

(21) Appl. No.: **13/917,865**

(22) Filed: **Jun. 14, 2013**

(65) **Prior Publication Data**

US 2013/0281986 A1 Oct. 24, 2013

Related U.S. Application Data

(63) Continuation of application No. 11/989,297, filed as application No. PCT/IL2005/000784 on Jul. 24, 2005, now Pat. No. 8,506,554.

(51) **Int. Cl.**

A61M 1/00	(2006.01)
F04B 53/22	(2006.01)
F04B 45/047	(2006.01)
A01B 1/00	(2006.01)
F04B 45/04	(2006.01)

(52) **U.S. Cl.**

CPC ***A61M 1/0023*** (2013.01); ***A61M 1/0031*** (2013.01); ***A61M 1/0072*** (2013.01); ***A61M 1/0088*** (2013.01); ***A61M 1/0066*** (2013.01); ***A61M 1/0027*** (2013.01); ***F04B 53/22*** (2013.01); *A61M 1/0037* (2013.01); ***A61M 1/0092*** (2013.01); ***F04B 45/047*** (2013.01)

USPC **604/540**; 604/35; 604/305; 604/306; 604/307; 604/308; 604/313; 604/317; 604/318; 604/319; 604/320; 604/321; 604/322; 604/323; 604/541; 604/542; 604/543; 604/544; 606/131

(58) **Field of Classification Search**

CPC A61M 1/00; A61M 27/00; A61F 13/00; A61F 13/02

USPC 604/540–544

See application file for complete search history.

(56) **References Cited**

U.S. PATENT DOCUMENTS

599,333	A	2/1898	Hulse
1,599,899	A	9/1926	Kettering et al.

(Continued)

FOREIGN PATENT DOCUMENTS

DE	24 01 643	A1	7/1975
DE	3205445	A1	8/1983

(Continued)

OTHER PUBLICATIONS

Worth et al., "Preliminary Report The Effectiveness of Bacterial Filtration in Vented Wound Drains" Journal of Surgical Research 27(6):405-407 (1979).

(Continued)

Primary Examiner — Tatyana Zalukaeva

Assistant Examiner — Ilya Treyger

(74) *Attorney, Agent, or Firm* — Browdy and Neimark, PLLC

(57) **ABSTRACT**

A vacuum system for draining an open wound from liquids exuded therefrom, comprising an enclosure sealable to the wound circumference, a vacuum pump including a disposable pump unit detachably attachable to a non-disposable drive unit, and a waste container for collection of drained liquids. The enclosure has an outlet connected by means of a tube to an inlet of the pump unit and the waste container is connected to an outlet of the pump unit, such that when the vacuum pump is operated the drained liquids flow through the vacuum pump. The enclosure has one or more bleeding holes provided therethrough or adjacent to its outlet so that ambient air may enter the tube and flow together with the drained liquids. The enclosure and the waste container are disposable so that the drained liquids contact only disposable elements and may be disposed of together with all disposable elements.

22 Claims, 2 Drawing Sheets

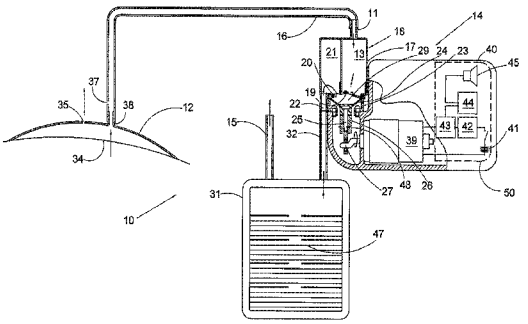

(56) **References Cited**

U.S. PATENT DOCUMENTS

3,026,874	A	3/1962	Stevens
3,416,461	A	12/1968	McFarland
3,516,160	A	6/1970	Leffler
4,108,574	A	8/1978	Bartley et al.
4,208,171	A	6/1980	Jonsson
4,447,226	A	5/1984	Mayoral
4,552,552	A	11/1985	Polaschegg et al.
4,583,970	A	4/1986	Kirchner
4,611,627	A	9/1986	Eidsvoog et al.
4,661,093	A	4/1987	Beck et al.
4,739,791	A	4/1988	Adahan
4,930,997	A	6/1990	Bennett
5,116,206	A	5/1992	Adahan
5,370,610	A	12/1994	Reynolds
5,419,687	A	5/1995	Adahan
5,578,006	A	11/1996	Schon
5,636,643	A	6/1997	Argenta et al.
5,645,081	A	7/1997	Argenta et al.
5,662,599	A	9/1997	Reich et al.
5,776,119	A	7/1998	Bilbo et al.
5,941,859	A	8/1999	Lerman
5,947,923	A	9/1999	Uehara et al.
6,042,560	A	3/2000	Niederberger
6,071,267	A	6/2000	Zamicrowski
6,257,847	B1	7/2001	Silver et al.
6,471,982	B1	10/2002	Lydon et al.
6,562,013	B1	5/2003	Marasco, Jr.
6,648,862	B2	11/2003	Watson
6,817,996	B2	11/2004	Fard et al.
6,824,533	B2	11/2004	Risk, Jr. et al.
7,128,735	B2	10/2006	Weston
7,229,422	B2	6/2007	Klobe
7,255,681	B1	8/2007	Silver et al.
7,503,910	B2	3/2009	Adahan
2001/0029956	A1	10/2001	Argenta et al.
2002/0151826	A1	10/2002	Ramey et al.
2003/0014022	A1	1/2003	Lockwood et al.
2003/0040687	A1	2/2003	Boynton et al.
2003/0050594	A1	3/2003	Zamicrowski
2003/0097100	A1	5/2003	Watson
2004/0015042	A1	1/2004	Vincent et al.
2004/0039243	A1	2/2004	Bearnson et al.
2004/0059284	A1	3/2004	Nash et al.
2004/0064132	A1	4/2004	Bochringer et al.
2004/0199840	A1	10/2004	Takeoka et al.
2005/0004534	A1	1/2005	Lockwood et al.
2005/0148913	A1	7/2005	Weston
2005/0180868	A1	8/2005	Miller
2005/0192548	A1	9/2005	Dolliver et al.

FOREIGN PATENT DOCUMENTS

DE	3205449	C2	9/1983
DE	102 15 896	A1	10/2003
EP	0156211	A2	10/1985
EP	0865304	B1	7/2001
GB	2 307 180	A	5/1997
GB	2 378 734	A	2/2003
JP	2002035111	A	2/2002
JP	2002541978	A	12/2002
RU	240188	A1	11/1947
WO	8401904	A1	5/1984
WO	96/05873	A1	2/1996
WO	97/18007	A1	5/1997
WO	9748427	A2	12/1997
WO	00/02016	A1	1/2000
WO	00/21586	A1	4/2000
WO	0064394	A1	11/2000
WO	01/34223	A1	5/2001
WO	03/016719	A1	2/2003
WO	03/030966	A1	4/2003
WO	03/057070	A2	7/2003
WO	2005/061025	A1	7/2005
WO	2008039223	A1	4/2008
WO	2008039314	A2	4/2008

OTHER PUBLICATIONS

Levite et al., "Possibilities for Dual-Lumen Drainages in Surgery" Body of the RSFSR Ministry of Public Health, Monthly Scientific and Practical Journal, pp. 39-41. (1987).

Notice of opposition to European patent EP2127690, dated Mar. 20, 2013.

Facts and Submissions in Opposition of EP 2127690, dated Mar. 20, 2013.

Edlich et al., "Evaluation of a New, Improved Surgical Drainage System" New Instruments, 149:295-298 (Feb. 1985).

Communication of a notice of opposition of EP 2127690, dated Apr. 8, 2013.

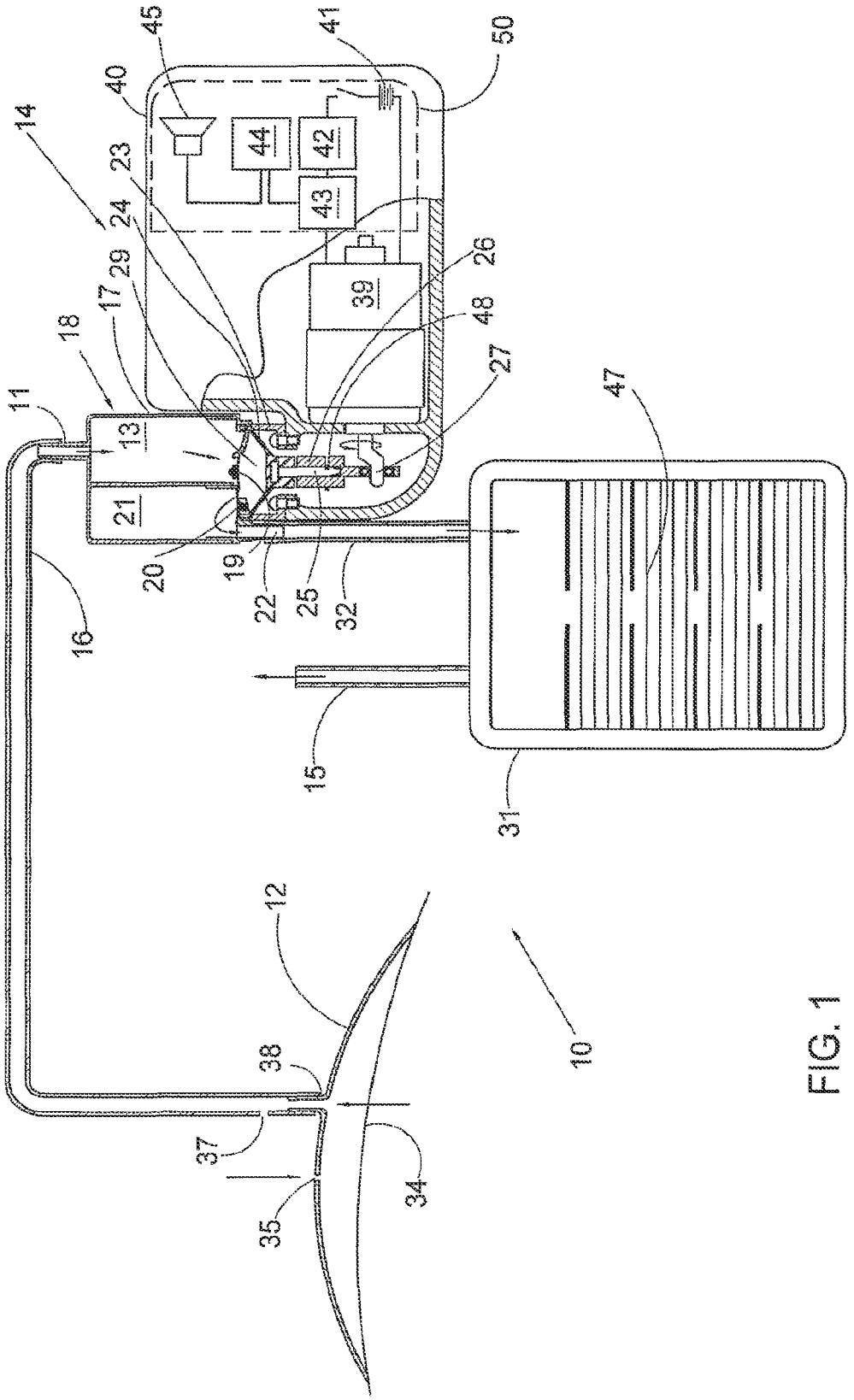
10
11
12
13
14
15
16
17
18
19
20
21
22
23
24
25
26
27
29
31
32
34
35
37
38
39
40
41
42
43
44
45
47
48
50

FIG. 1

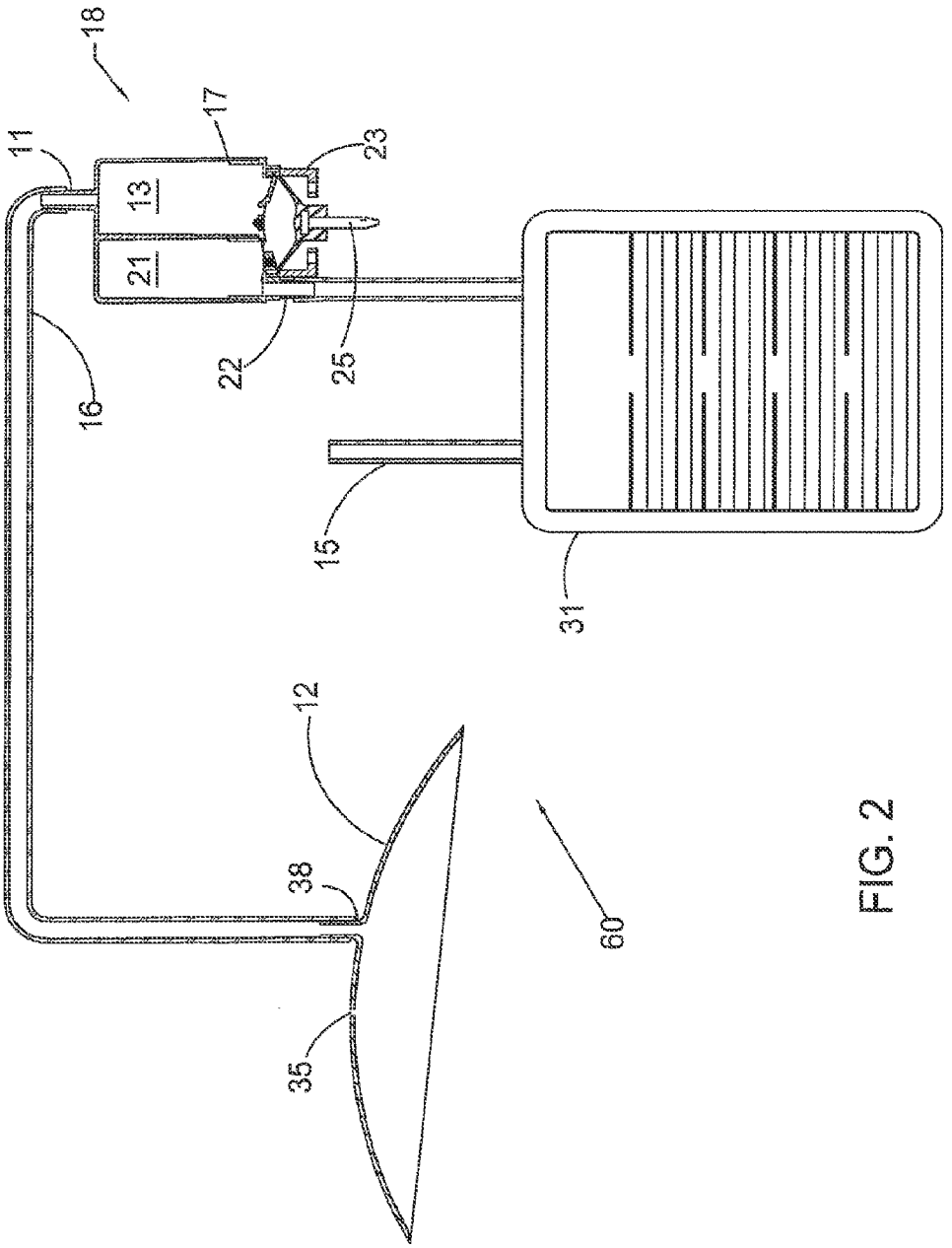

FIG. 2

WOUND CLOSURE AND DRAINAGE SYSTEM

FIELD OF THE INVENTION

This invention relates generally to wound healing, and more specifically to healing of wounds by negative pressure drainage.

BACKGROUND OF THE INVENTION

Negative pressure applied to a wound enhances drainage of fluids or exudate from the wound and promotes tissue growth and wound healing. This method of healing (known as "cupping") was exercised since the times of ancient Greek physicians until the 19th century.

WO 96/05873 describes a therapeutic apparatus for stimulating healing of wounds. The apparatus comprises a porous foamed pad which is sealed on the wound and connected by a tube to an inlet of a canister. A vacuum pump is connected to an outlet of the canister. A bacterial filter positioned over the outlet of the canister protects the vacuum pump from contamination by wound drainage fluids sucked into the canister. The pump, the canister and control circuitry are disposed in a case.

WO 97/18007 discloses a portable wound treatment apparatus using a similar arrangement of a porous pad, canister and vacuum pump. The canister and the pump are in one housing which accommodates also the control circuitry and is wearable on a harness or a belt.

U.S. Pat. No. 6,648,862 describes a portable vacuum desiccator using a similar arrangement as above, the canister being formed as a cartridge containing a trapping agent (desiccator). The vacuum pump and the canister may be integrated and detachable from the pump motor and circuitry.

Current negative pressure wound drainage systems such as the ones described above suffer from the following deficiencies:

- Since, the negative pressure applied to the wound area is created by pump suction, the flow into the pump is likely to contaminate the pump, or conversely, to require costly and complex methods of isolating the pump from the wound exudate such as antibacterial filters.
- The wound exudate is collected in a rigid canister, which must be large enough to prevent it from overflowing, and thus it is bulky and an inconvenient burden for ambulatory patients, who carry a portable system with them.
- Conventional wound drainage systems utilize an air tight seal of the wound, which is helpful in obtaining and maintaining negative pressure, but requires a pressure relief or bleed valve to produce the pressure cycling desirable to obtain accelerated wound closure, as described in WO 96/05873.
- A sealed wound dressing or enclosure, when under negative pressure, will promote migration of the exudate toward the negative pressure source, through the connecting tribe, which may occlude, should the exudate coagulate.
- The need to monitor and control the negative pressure level in conventional systems requires the use of a vacuum transducer, gage or relief valve, which must be connected to the suction tube, which is subject to contamination. Cleaning, disinfecting or isolating the negative pressure monitoring or controlling device are complex, costly and un-reliable.

SUMMARY OF THE INVENTION

It is the purpose of this invention to alleviate all the above listed deficiencies, by providing a wound drainage enclosure and vacuum system, which are impervious to contamination and easy to use.

In accordance with a first aspect of the present invention, there is provided an enclosure for draining an open wound from liquids exuded therefrom. The enclosure is attachable to the wound circumference so as to define a confined volume, and has an outlet, for example formed as a nipple, connectable by means of a tube to an inlet of a vacuum pump so that negative pressure may be created in said confined volume. One or more bleeding holes are provided in the enclosure or adjacent to its outlet such that ambient air can enter the tube and flow together with the exuded liquids when negative pressure is present. Ambient pressure may be restored in the confined volume when the vacuum pump is not operating.

The bleeding hole in the enclosure may be a calibrated orifice or other flow restrictors providing for controlled flow of ambient air into the enclosure or into its outlet. For instance, a hole plugged with open cell foam or an open pore sintered metal plug, which restrict the flow, but are not susceptible to plugging as is a small orifice.

The bleeding hole renders the wound closure vented or non-airtight, as distinguishable from conventional wound closures. The flow of air from the bleeding hole in the wound closure, in response to the negative pressure created by the vacuum pump, facilitates the removal of exudate, which might otherwise coagulate, dry-up and occlude the tubing.

According to another aspect of the present invention, there is provided a method for draining an open wound from liquids exuded therefrom. The method includes:

- providing an enclosure and sealing it to the wound circumference so as to define a confined volume,
- connecting the confined volume to a vacuum pump,
- connecting a waste container for collection of drained liquids to the vacuum pump, and
- operating said vacuum pump to draw the exuded liquids from the wound.

The method is characterized in that the confined volume is connected to an inlet of the vacuum pump and the waste container is connected to an outlet of the vacuum pump such that the drained liquids flow through said vacuum pump.

The method may include employment of an enclosure with bleeding orifices so that ambient air is allowed to enter the tube and flow together with the drained exuded liquids.

Preferably, gases are separated and released from the drained exuded liquids.

According to a further aspect of the present invention, there is provided a vacuum system for practicing the above method. The vacuum system may use a totally disposable vacuum pump, together with a waste collection bag, as disclosed in WO03016719. The vacuum pump is a two-chambered diaphragm pump adapted for pumping gases and liquids and/or any combination thereof. The vacuum pump is capable of pumping air and fluid which enter its inlet port, to a waste hag attached to its outlet port. The waste bag is vented to the atmosphere, such that it collects only the fluids which enter it.

The vacuum system may be adapted to be carried by an ambulatory patient.

According with a next aspect of the present invention, there is provided a disposable assembly for draining an open wound from liquids exuded therefrom. The assembly comprises an enclosure attachable to the wound circumference so as to define a confined volume, a vacuum pump unit connected to the enclosure so that negative pressure may be

created in the confined volume, and a waste container connected to the vacuum pump unit. The vacuum pump unit has means for detachably attaching to a drive unit for operating the pump unit. The enclosure is connected to an inlet of the vacuum pump unit and the waste container is connected to an outlet of the vacuum pump unit, such that when the vacuum pump unit is operated the drained liquids flow therethrough.

Preferably, the pump unit and the drive unit are adapted for attaching and detaching by simple hand manipulations.

The enclosure may have bleeding holes as described above.

The vacuum pump unit is preferably a two-chambered diaphragm pump adapted for pumping gases and liquids and/or any combination thereof.

The waste container may contain a porous media adapted to soak up the drained liquids and may be in the form of a collapsible or foldable bag.

The drained liquids and air contact only the parts of the disposable assembly. The drained exuded liquids may then be disposed of together with the disposable assembly. More specifically, the pump unit is disposed of after use, together with the tubing connected to it, as well as the waste bag connected, with its content, and with the wound closure which may be connected to the pump unit via the tube.

In accordance with yet another aspect of the present invention, there is provided a vacuum system as described above where the vacuum pump has a drive unit and a control block adapted to power the drive unit so that a predetermined level of negative pressure is maintained in the confined volume. The control block has a sensor for sensing working parameters of the drive unit and means for deriving the level of negative pressure in the confined volume from these working parameters, in order to maintain said predetermined level. The sensor has no fluid connection with the confined volume.

For example, the drive unit may comprise a direct current electric motor and the sensor may sense the electric current driving the motor. The same function of negative pressure control may be accomplished by an adjustable torque limiting clutch, placed between the motor output shaft and the pump.

The control block may be provided with alarm means to warn the user if the predetermined level of negative pressure is not maintained.

If the vacuum pump comprises a disposable pump unit and the drive unit is detachably attachable to the pump unit, the control block with monitoring means is preferably associated with the drive unit which is non-disposable.

Thus, indirect means are provided for controlling or monitoring the level of negative pressure applied to the wound, without making any direct connection to a vacuum sensor, transducer or gage to any portion of the system, which has the negative pressure applied to it. The indirect negative pressure monitoring and control result from the need to dispose of any portion of the system, which may come in contact with the pumped media, which is likely to be contaminated or infectious. Accordingly, all the disposable components in the system may be relatively low in cost, to promote discarding them after use. Pressure transducers, vacuum gages or sensors, are relatively costly, and thus not considered disposable.

BRIEF DESCRIPTION OF THE DRAWINGS

In order to understand the invention and to see how it may be applied, a preferred embodiment will now be described, by way of non-limiting example only, with reference to the accompanying drawings, in which:

FIG. **1** is a schematic sectional view of the vacuum system of the present invention applied on a wound.

FIG. **2** shows the disposable portion of the system of FIG. **1**.

DETAILED DESCRIPTION OF EXEMPLARY EMBODIMENTS

The present invention provides a system and a method of treating and healing of a body wound, by applying a negative pressure to the wound, over an area sufficient to promote migration of epithelial and subcutaneous tissue toward the wound.

It is appreciated that the detailed description that follows is intended only to illustrate certain preferred embodiments of the present invention, it is in no way intended to limit the scope of the invention, as set out in the claims.

With reference to FIG. **1**, in accordance with the present invention, a vacuum system **10** for draining an open wound from liquids exuded therefrom comprises a wound enclosure **12**, a vacuum pump **14**, and waste collection bag **31**. The wound enclosure **12** is connected by a suction tube **16** to an inlet **11** of the vacuum pump. The waste collection bag **31** is connected to an outlet **22** of the vacuum pump. Thereby, when the vacuum pump **14** is operated, the drained liquids flow through the pump into the waste bag **31**.

Suction tube **16** is connected to nipple **38** of the enclosure **12** which covers wound area of the body **34** such that suction of air through tube **16** creates negative pressure in the volume above the wound area of the body **34**. A bleeding orifice **35** is provided within the enclosure **12**, or adjacent to it as a tube orifice **37**, allowing ambient air to flow into and through suction tube **16**, rendering enclosure **12** non-air tight, or vented. This feature, unlike conventional sealed closures, provides for quick movement of exudate entering suction tube **16**, toward the vacuum pump **14**, and into the waste bag **31**, before it dries up or coagulates and occludes the tube. This feature also provides for introduction of ambient pressure to the wound area of the body **34** whenever the vacuum pump stops pumping, allowing cyclic negative pressure application to the wound, by cycling the vacuum pump on and off alternately.

Instead of the bleeding orifice **35** in the enclosure, other flow restrictors may be used to provide for controlled flow of ambient air into the enclosure or into the outlet. For instance, a hole plugged with open cell foam or an open pore sintered metal plug, which restrict the flow, but are not susceptible to plugging as is a small orifice.

The vacuum pump **14** comprises a pump unit **18** and a drive unit **40** which are detachably attachable to each other, as explained below. The pump unit **18** includes a two-chambered housing **17** and a diaphragm **24** secured to the underside of the two-chambered housing **17** so as to form a working chamber **29**.

The two-chambered housing **17** has a first chamber **13** with the inlet **11** and a second chamber **21** with an outlet **22**. The suction tube **16** is connected to the inlet **11**. Two one-way valves **19** and **20** are present at the bottom of the first chamber **13** and the second chamber **21**, respectively. To the bottom of the two-chambered housing **17** there is attached a mounting base **23**, used to mount the housing **17** to the drive unit **40** by means of a bayonet lock.

The diaphragm **24** has an integral rod-shaped drive member **25**, which is used for engagement with the drive unit **40**.

The drive unit **40** includes an electric motor **39**, batteries **41** and a control block **50** described below. The shaft of the motor **39** has a crank **27** coupled to a reciprocating rod **26**. The rod **26** has a receptacle with a cavity adapted to receive and lock therein the drive member **25**.

When the pump unit **18** is attached to the drive unit **40** by means of the bayonet lock in the base **23**, the drive member **25** is received in the receptacle cavity of the reciprocating rod **26** and then locked therein.

Upon activation of the motor **39**, the crank **27** is rotated and reciprocates the receptacle rod **26**, causing the diaphragm **24** to expand and contract the working chamber **29**. Thus the pump unit **18** pumps air or liquid that passes through the one-way valves **19** and **20**.

Air and liquids enter the two-chambered housing **17** through the inlet **11** and suction tube **16** which is connected to the patient's wound enclosure **12**, for the removal of exudate. Liquids and air enter the first chamber **13**, which is under negative pressure when diaphragm **24** reciprocates, driving them past one-way valve **20**, into the second chamber **21**. The air and liquid which are pumped through outlet **22**, enter waste bag **31**.

The pump's ability to pump air and liquid, unlike conventional pumps, which are efficient in pumping only one type of matter, is enhanced by the flexibility of the diaphragm **24** which allows the diaphragm to yield when encountering heavy loads, such as those present when pumping liquid. This diaphragm flexibility also provides an additional substantial advantage: when the negative pressure in working chamber **29** is high, the diaphragm **24** stretches to allow the reciprocation of the receptacle rod **26** to occur, at minimal burden to the electric motor **39**.

The waste bag **31** has a vent **15**, through which air and gas are discharged to the atmosphere. Accordingly, waste bag **31** will retain only the waste fluids which are pumped into it. The waste bag may contain a porous media **47** adapted to soak up the drained liquids.

It is important to note that waste bag **31** is made of thin plastic sheet, which allow it to be folded or collapsed when not full, providing the convenience of having minimal bulk and minimal inconvenience to the patient using or carrying it.

The drive unit **40** also includes a control block **50** with control circuits such as cycle control **42**, which turns the motor pump on and off alternately, motor voltage and current monitoring and control **43**, which controls the negative pressure level produced by the pump unit **18**, by controlling the voltage and current which drive motor **39**. At any given voltage which drives motor **39**, the current draw of the motor is directly related to the negative pressure generated by the pump **18**. Accordingly, monitoring of the current which the motor **39** draws allows for indirect monitoring of the negative pressure attained by pump **18**. The ability to monitor the negative pressure developed by pump **18**, indirectly, precludes the need of making an infectious negative pressure line connection to a pressure transducer or vacuum gage.

For example, if the motor **39** is a direct current electric motor, a sensor may sense the electric current driving the motor. Since the direct current motor output torque is directly related to the current driving the motor, and since the motor output torque is directly related to the negative pressure the pump **18** produces, monitoring the motor current or controlling it, provide for monitoring and controlling the negative pressure produced by the vacuum pump. Motor current monitoring is only one of the available methods of indirect negative pressure monitoring and controlling. The same function of negative pressure control may be accomplished, by an adjustable torque limiting clutch placed between the motor output shaft and the crank **27**.

The control block **50** also has a negative pressure comparator **44**, which compares the desired set negative pressure level obtained by pump **18**, and the actual monitored negative pressure level as obtained indirectly from motor voltage and current monitoring and control **43**. Comparator **44** will activate audible alarm **45**, whenever pump **18** fails to reach the desired pre-set negative pressure level.

FIG. **2** shows the disposable portion of the system as an assembly **60**, which includes the pump unit **18**, the waste bag **31**, the connecting tube **16** and the wound enclosure **12**, all separated from the drive unit and from the wound area of the body **34**. The assembly **60** may be disposed of in its totality after use, and replaced by a new assembly, thus keeping the costly drive unit **40** free from any contamination. It would be obvious to those skilled in the art, that the present invention alleviates the need for cleaning or disinfecting any portion of drive unit **40** after use, or providing protective means, such as filters, to keep contaminants from reaching the costly drive **40**.

The invention claimed is:

1. A vacuum system for applying negative pressure to a wound, the vacuum system comprising: an enclosure, a venting arrangement, a tube, a vacuum source, and a controller:

the enclosure being attachable to a periphery of the wound so as to define a confined volume;

the enclosure having an enclosure outlet connectable to said vacuum source via said tube so that negative pressure can be selectively created in said volume;

the venting arrangement comprising a flow restrictor to restrict flow through said venting arrangement and to thereby provide a controlled flow of ambient air into said vacuum system upstream of the vacuum source;

the controller configured for controlling operation of the vacuum source while providing venting of the vacuum system via said venting arrangement to provide a desired level of said negative pressure in said confined volume.

2. The vacuum system according to claim **1**, wherein said flow restrictor is provided in any one of the enclosure or the tube.

3. The vacuum system according to claim **1**, further comprising a sensor for enabling determination of a level of said negative pressure in said confined volume.

4. The vacuum system according to claim **1**, further comprising a waste container in fluid communication with said vacuum source.

5. The vacuum system according to claim **1**, wherein said vacuum source comprises a vacuum pump driven by a motor.

6. The vacuum system according to claim **5**, wherein said motor is an electric motor, and said controller controls operation of said motor to thereby provide a desired level of said negative pressure in said confined volume.

7. The vacuum system according to claim **6**, wherein said controller controls the electric current or the voltage of said motor to control said level of said negative pressure in said confined volume.

8. The vacuum system according to claim **6**, wherein said controller controls the torque of said motor to control said level of said negative pressure in said confined volume.

9. The vacuum system according to claim **1**, wherein ambient pressure may be restored in said confined volume via said venting arrangement when said vacuum pump is not operating.

10. The vacuum system according to claim **1**, wherein said venting arrangement comprises at least one of:

one or more bleeding holes;

a porous body;

an orifice.

11. A vacuum system for applying negative pressure to a wound, the vacuum system comprising: an enclosure, a venting arrangement, a tube, a vacuum source, and a controller:

the enclosure being attachable to a periphery of the wound so as to define a confined volume;

the enclosure having an enclosure outlet connectable to said vacuum source via said tube so that negative pressure can be selectively created in said volume, said venting arrangement located outside said enclosure and comprising a flow restrictor to restrict flow through said venting arrangement and to thereby provide a controlled flow of ambient air into said tube, said controlled flow of ambient air entering said tube via said venting arrangement without entering said enclosure;

the controller configured for controlling operation of the vacuum source while said tube is being vented via said venting arrangement to provide a desired level of said negative pressure in said confined volume.

12. The vacuum system according to claim **11**, further comprising a sensor for enabling determination of a level of said negative pressure in said confined volume.

13. The vacuum system according to claim **11**, further comprising a waste container in fluid communication with said vacuum source.

14. The vacuum system according to claim **11**, wherein said vacuum source comprises a vacuum pump driven by a motor.

15. The vacuum system according to claim **14**, wherein said motor is an electric motor, and said controller controls operation of said motor to thereby provide a desired level of said negative pressure in said confined volume.

16. The vacuum system according to claim **15**, wherein said controller controls at least one of the electric current of said motor, or the voltage of said motor, or the torque of said motor to control said level of said negative pressure in said confined volume.

17. The vacuum system according to claim **11**, wherein ambient pressure may be restored in said confined volume via said venting arrangement when said vacuum pump is not operating.

18. The vacuum system according to claim **11**, wherein said venting arrangement comprises at least one of:

one or more bleeding holes;

a porous body;

an orifice.

19. A method for applying negative pressure to a wound, comprising:

(a) providing a vacuum system comprising at least: an enclosure, a venting arrangement, a tube, and a vacuum source:

the enclosure being attachable to a periphery of the wound so as to define a confined volume;

the enclosure having an enclosure outlet connectable to said vacuum source via said tube so that negative pressure can be selectively created in said volume;

the venting arrangement comprising a flow restrictor to restrict flow through said venting arrangement and to thereby provide a controlled flow of ambient air into said system upstream of the vacuum source;

(b) controlling operation of the vacuum source while the vacuum system is being vented via the venting arrangement to thereby provide a desired level of said negative pressure in said confined volume.

20. The method according to claim **19**, wherein the vacuum source comprises a vacuum pump driven by an electric motor, and wherein step (b) comprises controlling operation of said motor to thereby provide a desired level of said negative pressure in said confined volume.

21. The method according to claim **20**, wherein step (b) comprises controlling at least one of the electric current, or the voltage, or the torque of said motor to control said level of said negative pressure in said confined volume.

22. The method according to claim **19**, wherein said venting arrangement comprises at least one of:

one or more bleeding holes;

a porous body;

an orifice.

* * * * *