US006695823B1

(12) **United States Patent**
Lina et al.

(10) **Patent No.: US 6,695,823 B1**
(45) **Date of Patent: Feb. 24, 2004**

(54) **WOUND THERAPY DEVICE**

(75) Inventors: **Cesar Z. Lina**, Universal City, TX (US); **Keith Heaton**, Poole (GB); **Royce Johnson**, Universal City, TX (US)

(73) Assignee: **KCI Licensing, Inc.**, San Antonio, TX (US)

(*) Notice: Subject to any disclaimer, the term of this patent is extended or adjusted under 35 U.S.C. 154(b) by 0 days.

(21) Appl. No.: **09/545,339**

(22) Filed: **Apr. 7, 2000**

Related U.S. Application Data

(60) Provisional application No. 60/128,567, filed on Apr. 9, 1999.

(51) **Int. Cl.**[7] **A61F 13/00**
(52) **U.S. Cl.** **604/304**; 602/43
(58) **Field of Search** 604/313, 305, 604/304, 308, 289; 602/43, 47, 53–54

(56) **References Cited**

U.S. PATENT DOCUMENTS

1,335,846 A		10/1920	Rannells	
2,547,758 A		4/1951	Keeling	
2,632,443 A		3/1953	Lesher	
2,682,873 A		7/1954	Evans et al.	
2,969,057 A		1/1961	Simmons	
3,367,332 A		2/1968	Groves	
3,648,692 A		3/1972	Wheeler	
3,682,180 A		8/1972	McFarlane	
3,826,254 A		7/1974	Mellor	
3,978,855 A	*	9/1976	McRae et al.	128/156
4,080,970 A		3/1978	Miller	
4,096,853 A		6/1978	Weigand	
4,139,004 A		2/1979	Gonzalez	
4,165,748 A		8/1979	Johnson	
4,233,969 A		11/1980	Lock et al.	
4,245,630 A		1/1981	Lloyd et al.	
4,261,363 A		4/1981	Russo	

(List continued on next page.)

FOREIGN PATENT DOCUMENTS

AU	550575 A1	8/1982
EP	0100148	2/1984
EP	0358302	5/1989
GB	9623743.3	11/1996
WO	WO 97/18007	11/1996

OTHER PUBLICATIONS

Susan Mendez–Eastman, RN; When Wounds Won't Heal, RN Jan. 1998, vol. 61(1); Medical Economics Company, Inc., Montvale, NJ, USA.

(List continued on next page.)

Primary Examiner—Weilun Lo
Assistant Examiner—Linh Truong
(74) *Attorney, Agent, or Firm*—Gunn, Lee & Hanor, P.C.; Michelle Evans

(57) **ABSTRACT**

A wound closure apparatus having a housing that contains a vacuum pump and a chamber for holding a disposable wound fluid collection canister. The canister resides within the chamber and connects at an outlet with the vacuum pump at an inlet with a porous wound pad. The pad is placed over or within a wound and adhesively secured thereto. When the vacuum pump activates, it evacuates air from the canister resulting in wound fluids flowing from the wound into the canister. Due to the negative effect that a vacuum can impose on tissue when granulation tissue is pulled into the pad, the pad contains multiple pore sizes to prevent granulation tissue from migrating into the pad. The pad has an outer surface adjacent the wound with pore sizes of a diameter of approximately 100 microns or less to prevent tissue from growing into the pad and is treated for biocompatibility.

1 Claim, 11 Drawing Sheets

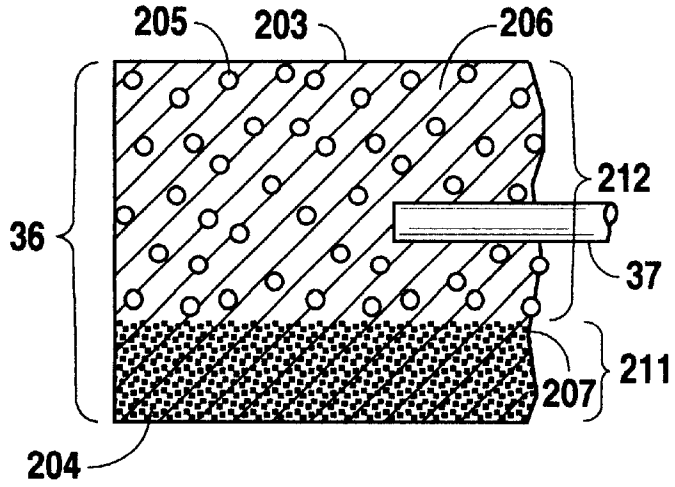

U.S. PATENT DOCUMENTS

4,275,721	A		6/1981	Olson	
4,284,079	A		8/1981	Adair	
4,297,995	A		11/1981	Golub	
4,333,468	A		6/1982	Geist	
4,373,519	A		2/1983	Errede et al.	
4,382,441	A		5/1983	Svedman	
4,392,853	A		7/1983	Muto	
4,392,858	A		7/1983	George et al.	
4,419,097	A		12/1983	Rowland	
4,475,909	A		10/1984	Eisenberg	
4,480,638	A		11/1984	Schmid	
4,525,166	A		6/1985	Leclerc	
4,525,374	A		6/1985	Vailancourt	
4,540,412	A		9/1985	Van Overloop	
4,543,100	A		9/1985	Brodsky	
4,551,139	A		11/1985	Plaas et al.	
4,569,348	A		2/1986	Hasslinger	
4,605,399	A		8/1986	Weston et al.	
4,608,041	A		8/1986	Nielson	
4,636,643	A		1/1987	Nakamura et al.	
4,640,688	A		2/1987	Hauser	
4,655,754	A		4/1987	Richmond et al.	
4,733,659	A		3/1988	Edenbank et al.	
4,743,232	A		5/1988	Kruger	
4,787,888	A		11/1988	Fox	
4,826,949	A		5/1989	Stanko	
4,838,883	A		6/1989	Matsuura	
4,840,187	A		6/1989	Brazier	
4,863,449	A		9/1989	Therriault et al.	
4,872,450	A		10/1989	Austad	
4,878,901	A		11/1989	Sachse	
4,897,081	A		1/1990	Poirier et al.	
4,906,233	A		3/1990	Moriuchi et al.	
4,906,240	A		3/1990	Reed et al.	
4,919,654	A		4/1990	Kalt	
4,941,882	A		7/1990	Ward et al.	
4,948,575	A	*	8/1990	Cole et al.	424/44
4,953,565	A		9/1990	Tachibana et al.	
4,969,880	A	*	11/1990	Zamierowski	604/305
4,985,019	A		1/1991	Michelson	
5,037,397	A		8/1991	Kalt et al.	
5,100,396	A		3/1992	Zamierowski	
5,149,331	A		9/1992	Ferdman et al.	
5,167,613	A		12/1992	Karami et al.	
5,176,663	A		1/1993	Svedman et al.	
5,232,453	A		8/1993	Plass et al.	
5,261,893	A		11/1993	Zamierowski	
5,298,015	A		3/1994	Komatsuzaki et al.	
5,344,415	A		9/1994	DeBusk et al.	
5,358,494	A		10/1994	Svedman	
5,527,293	A		6/1996	Zamierowski	
5,556,375	A		9/1996	Ewall	
5,607,388	A		3/1997	Ewall	
5,636,643	A		6/1997	Argenta et al.	
5,645,081	A		7/1997	Argenta et al.	
5,885,254	A	*	3/1999	Matyas	604/180
6,071,267	A	*	6/2000	Zamierowski	604/289
6,135,116	A	*	10/2000	Vogel et al.	128/898
6,142,982	A	*	11/2000	Hunt et al.	604/313
6,458,109	B1	*	10/2002	Henley et al.	604/304
6,488,643	B1		12/2002	Tumey et al.	
6,493,568	B1		12/2002	Bell et al.	
2002/0115951	A1		8/2002	Norstrem et al.	
2002/0120185	A1		8/2002	Johnson	
2002/0143286	A1		10/2002	Tumey	

OTHER PUBLICATIONS

James H. Blackburn II, MD et al.; Negative–Pressure Dressings as a Bolster for Skin Grats; Annals of Plastic Surgery, vol. 40, No. 5, May 1998, pp. 453–457; Lippincott Williams & Wilkins, Inc., Philadelphia, PA, USA.

George V. Letsou, M.D., et al..; Stimulation of Adenylate Cyclase Activity in Cultured Endothelial Cells Subjectied to Cyclic Stretch; Journal of Cardiovascular Surgery, 31, 1990, pp. 634–639; Edizonia Minerva Medica, Torino, Italy.

Jill Fowler, Jeanette McHone, North Carolina Baptist Hosp., Winston Salem, NC, Michael Morykwas, Louis Argenta, Bowman Gray School of Med; Acute/Traumatic Wound with Massive Soft Tissue Loss.

Huge Cost Savings and Improved Patient Care Predicted; Two–Ten Communications, Communications House, 210 Old Street, London EC1V 9UN.

* cited by examiner

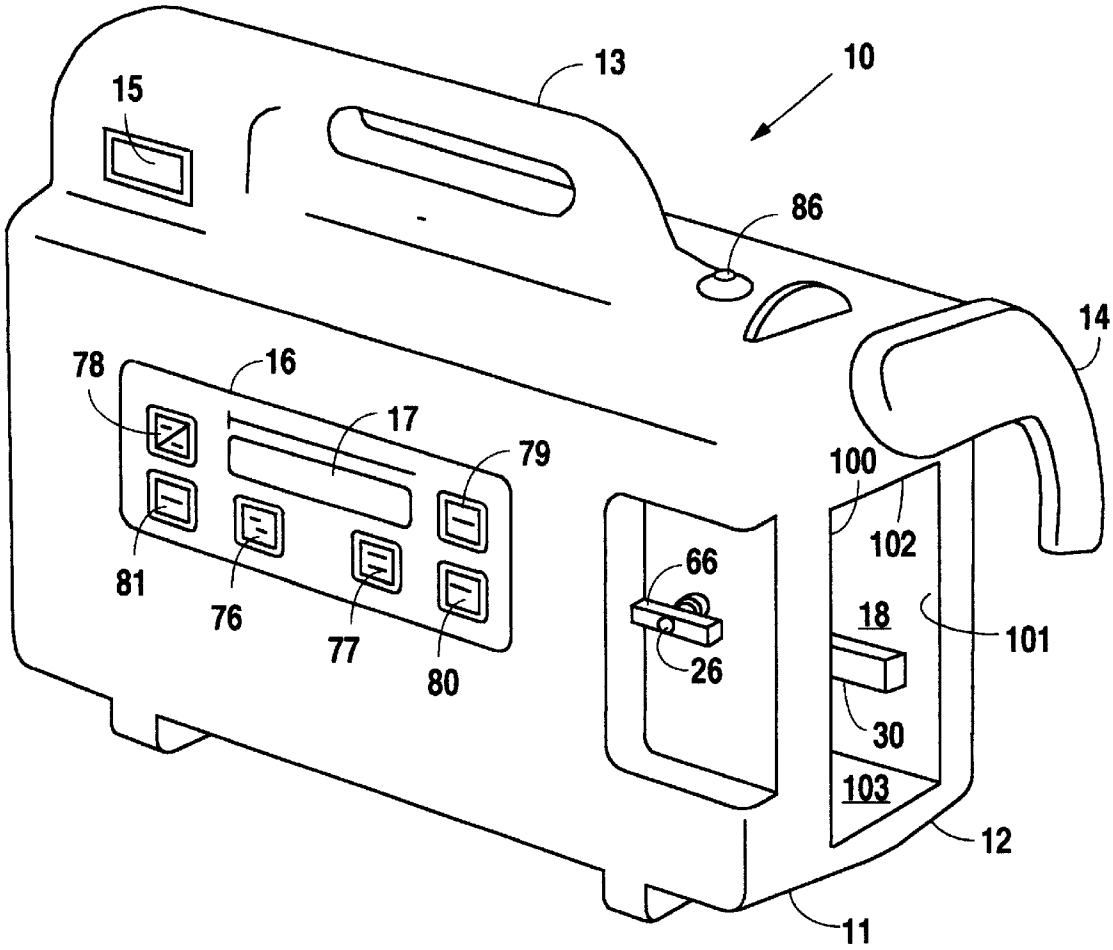
13
10
15
86
14
78
16
17
79
100
102
81
76
77
80
66
26
18
101
30
103
12
11

Fig. 1

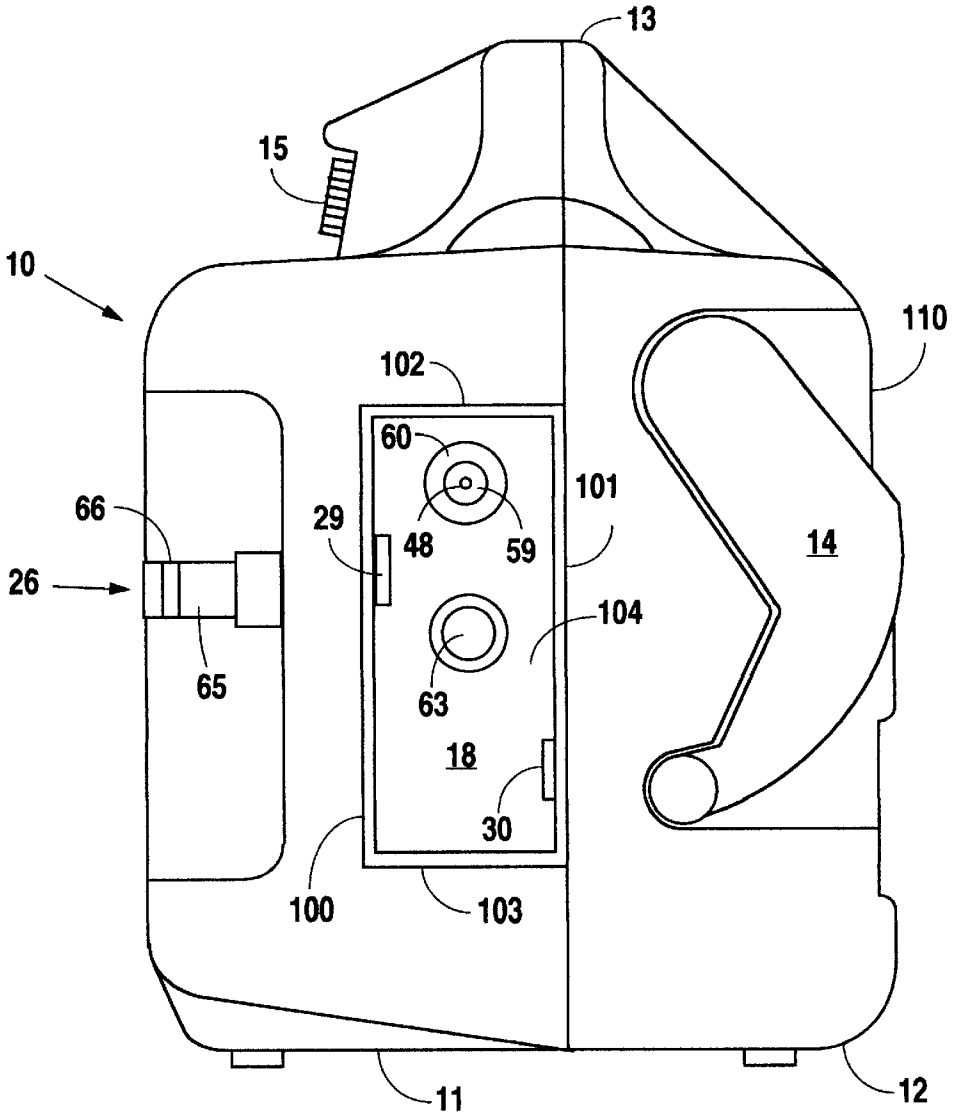
13
15
10
110
102
60
101
66
29
48
59
14
26
104
65
63
18
30
100
103
11
12

Fig. 2

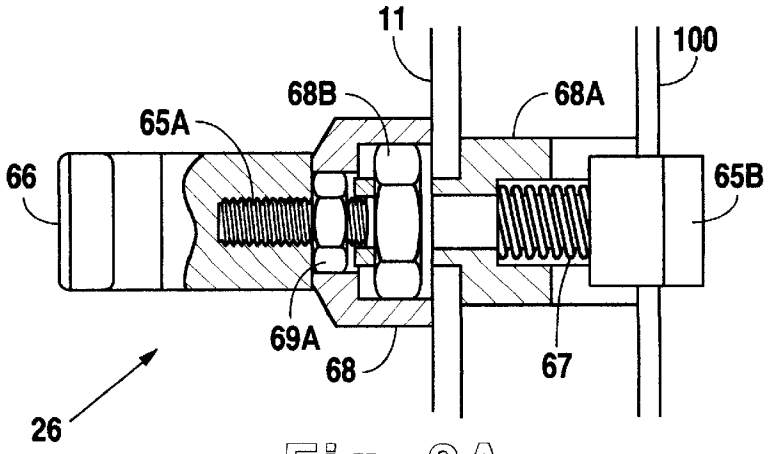
11
100
68B
68A
65A
66
65B
69A
68
67
26

Fig. 2A

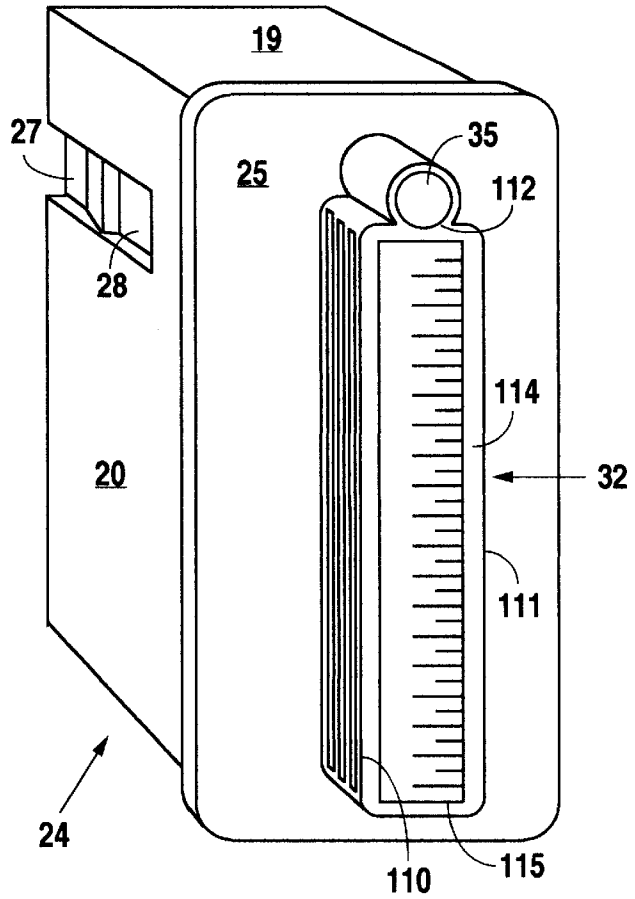
19
27
25
35
112
28
114
20
32
111
24
110
115

Fig. 3

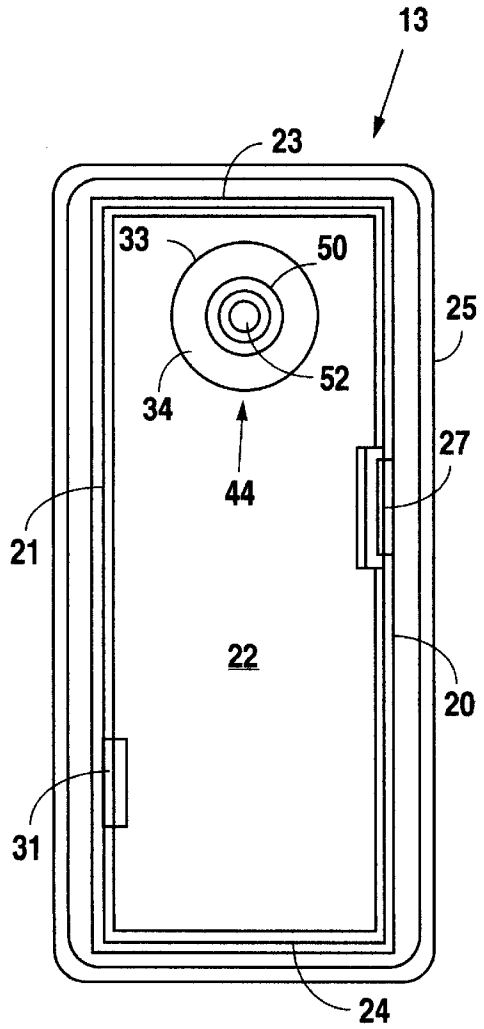
13
23
33
50
25
52
34
27
44
21
22
20
31
24

Fig. 4

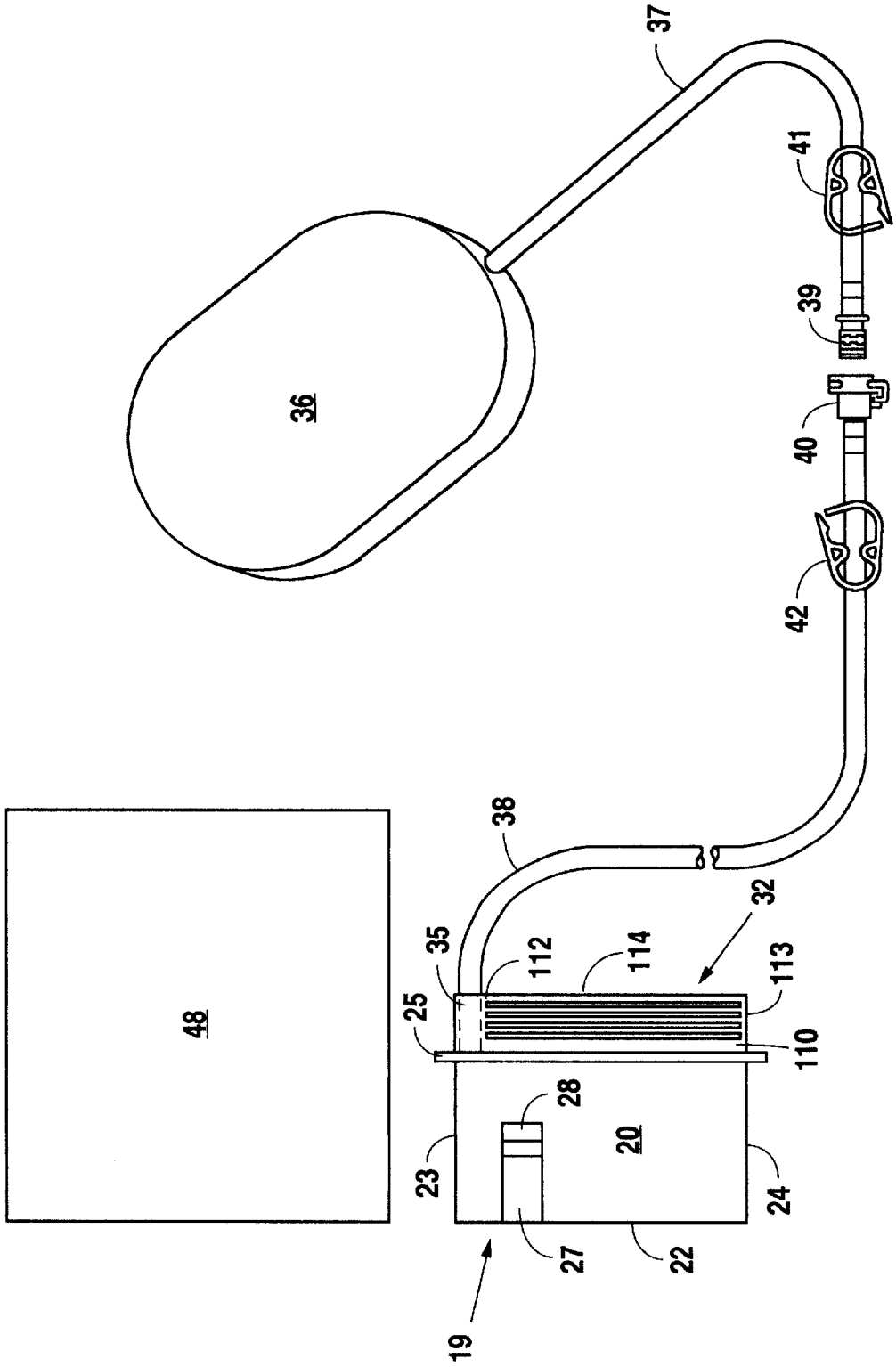

Fig. 5

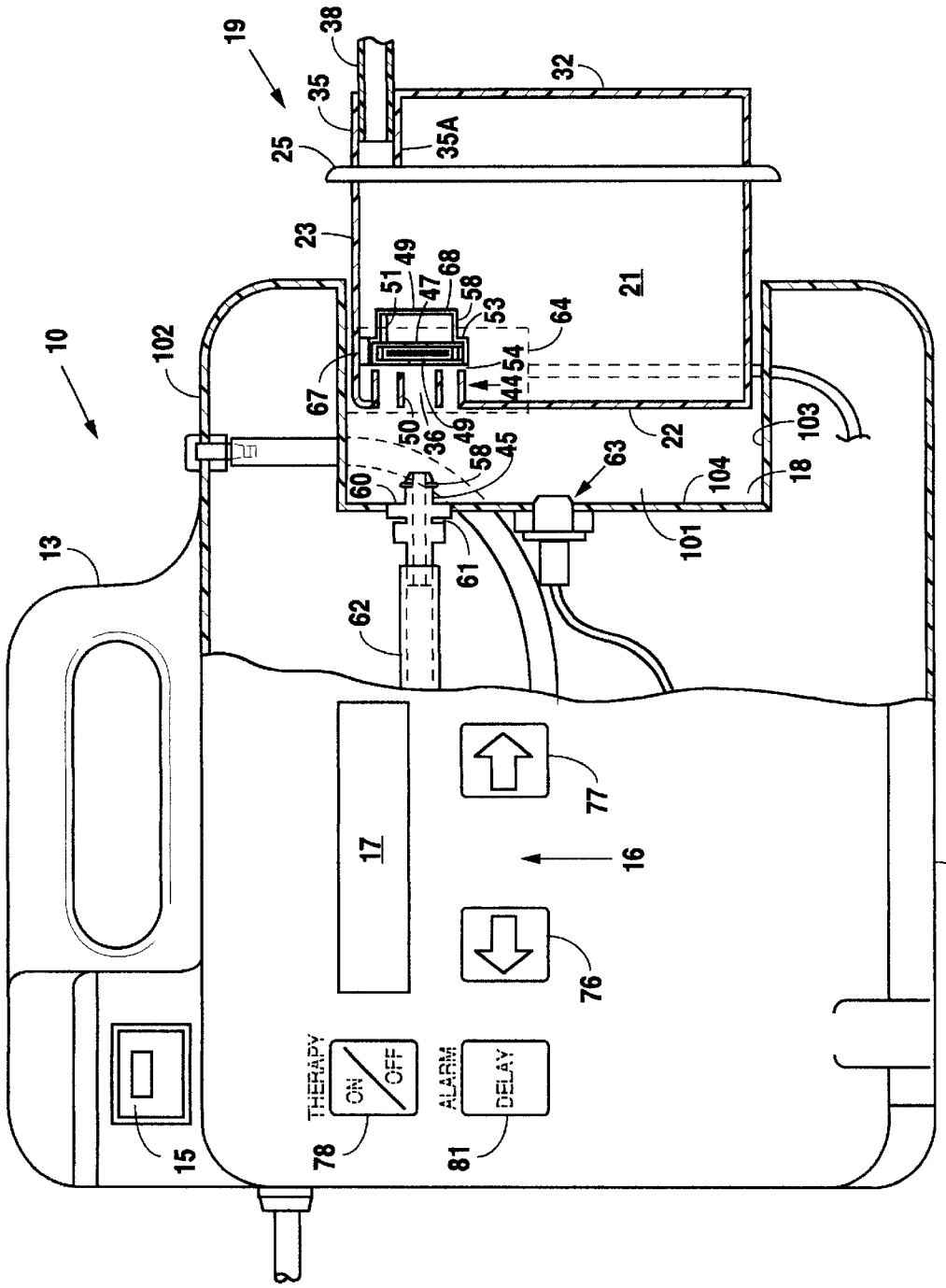

Fig. 6

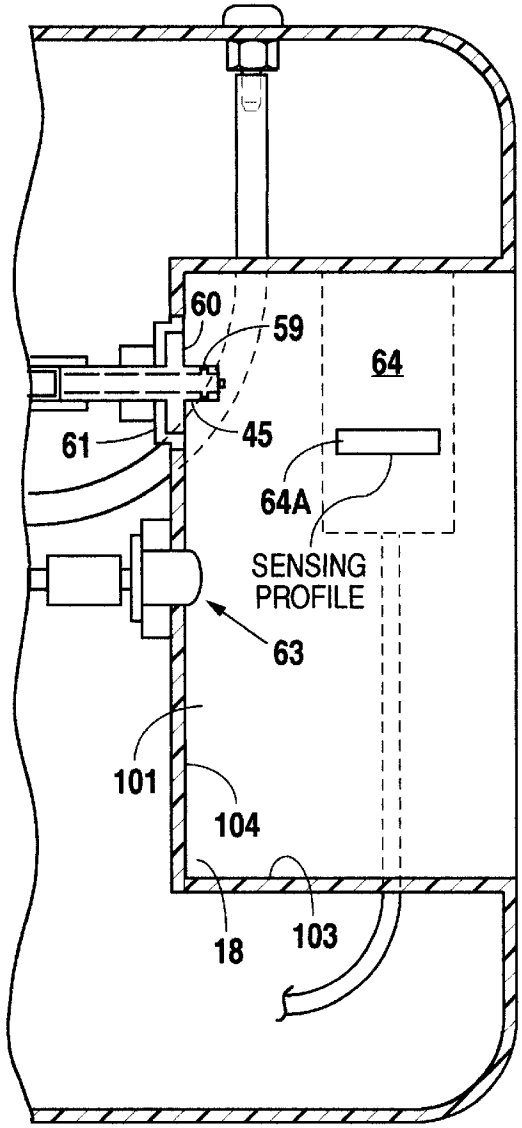

Fig. 6A

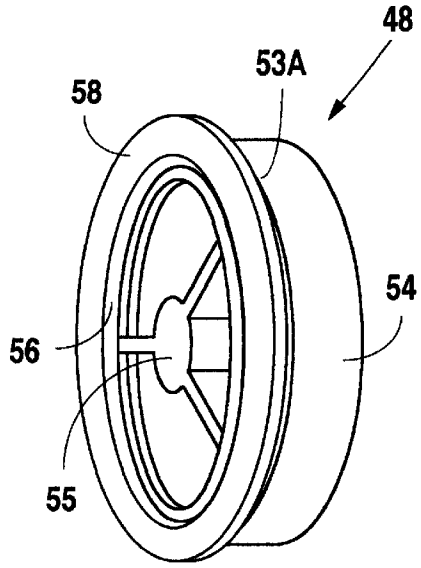

Fig. 7

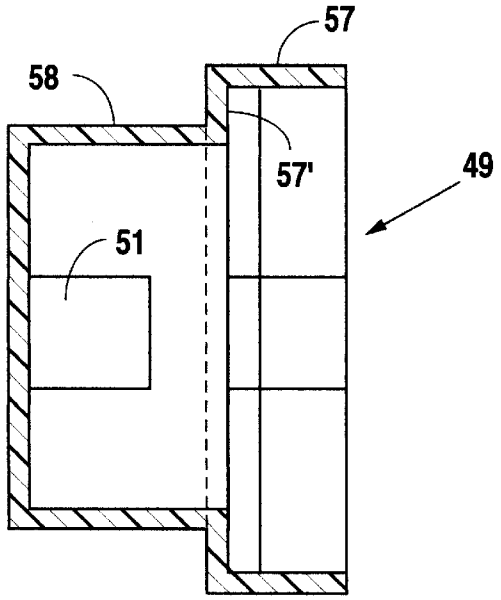

Fig. 8

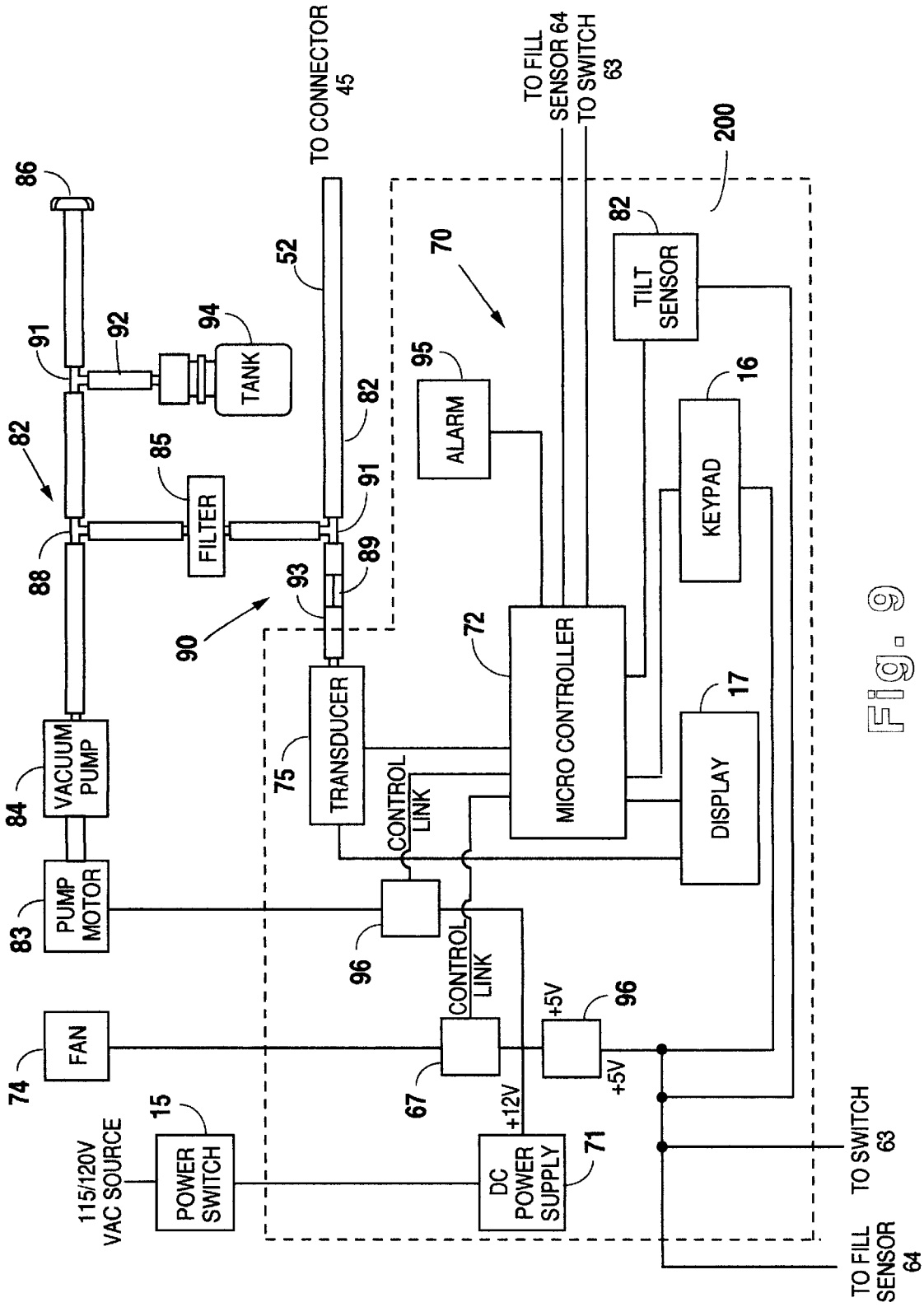
TO CONNECTOR 45
TO FILL SENSOR 64
TO SWITCH 63
200
86
52
70
82
TILT SENSOR
91
92
94
TANK
95
ALARM
16
KEYPAD
82
85
FILTER
91
88
89
93
90
72
MICRO CONTROLLER
17
DISPLAY
75
TRANSDUCER
CONTROL LINK
84
VACUUM PUMP
83
PUMP MOTOR
96
CONTROL LINK
+5V
96
74
FAN
67
+12V
+5V
15
115/120V VAC SOURCE
POWER SWITCH
DC POWER SUPPLY
71
TO SWITCH 63
TO FILL SENSOR 64

Fig. 9

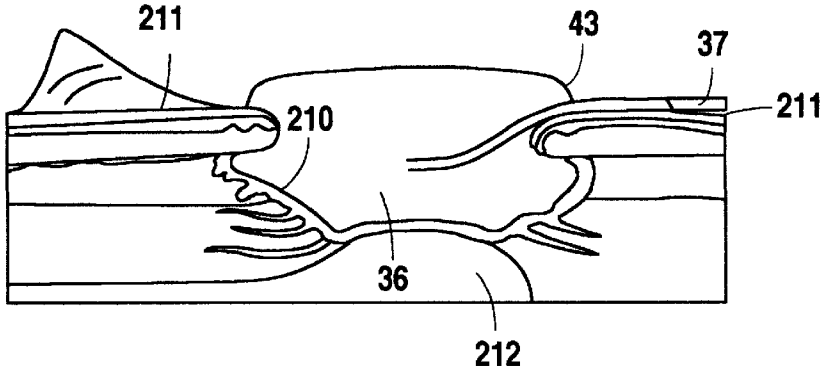

Fig. 10

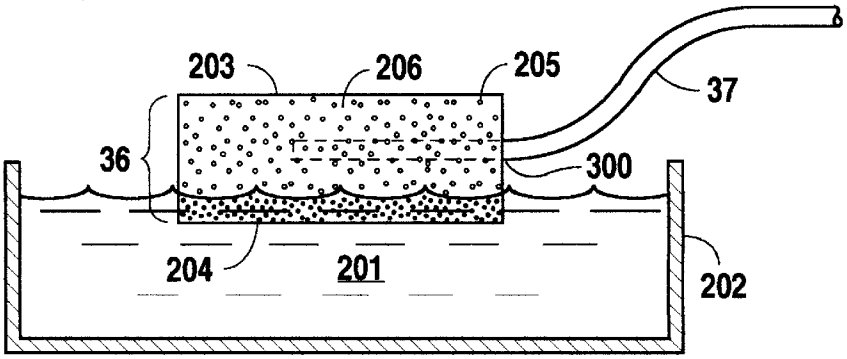

Fig. 11

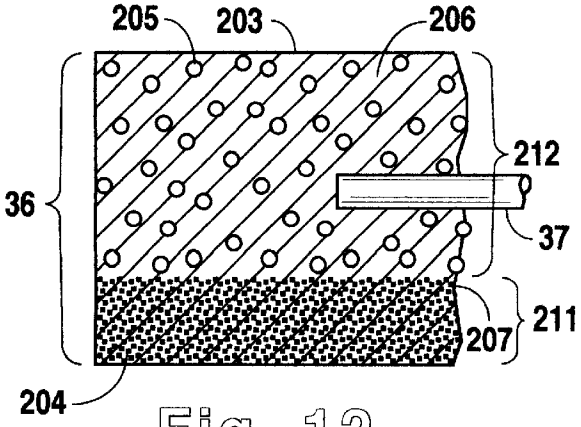

Fig. 12

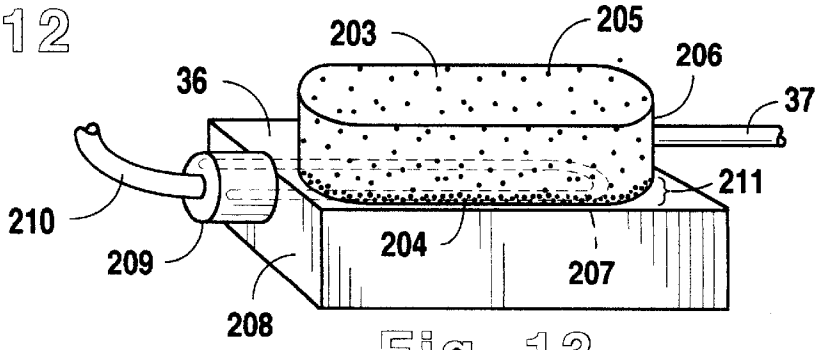

Fig. 13

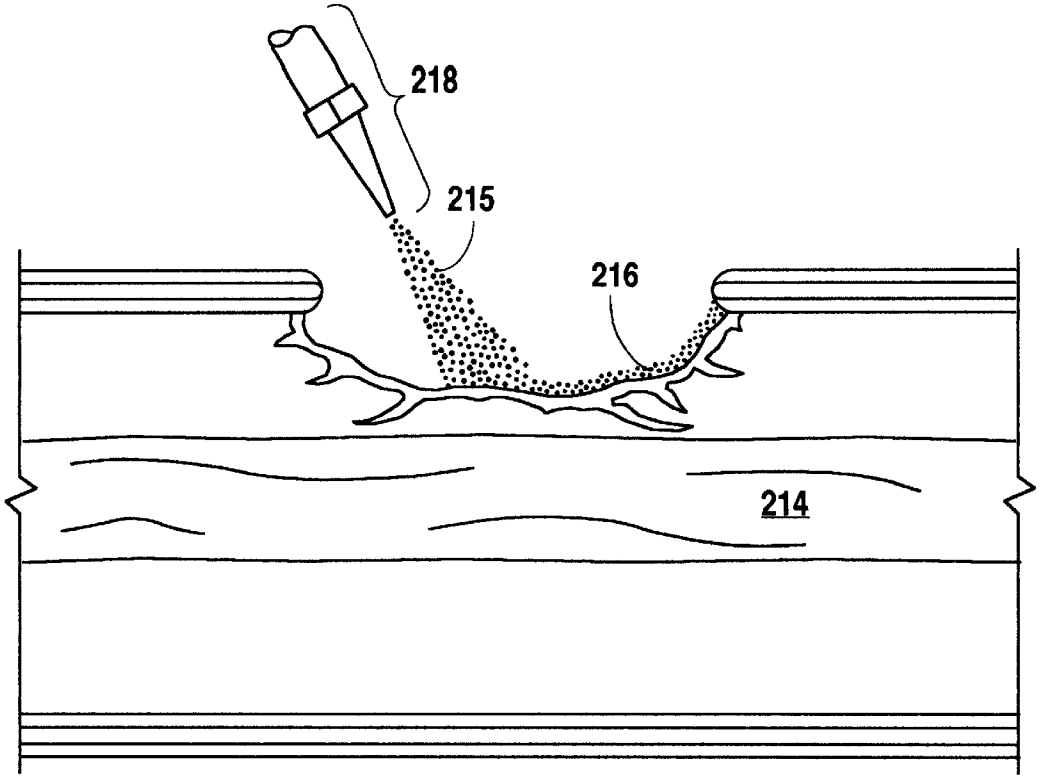

Fig. 14A

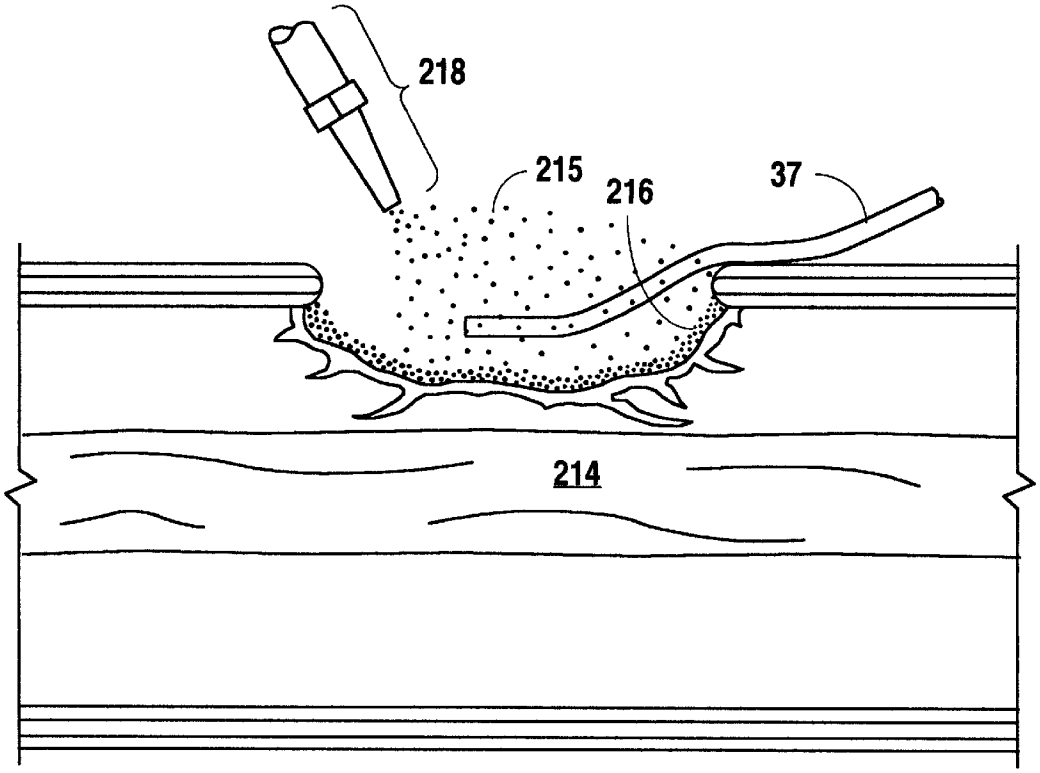

Fig. 14B

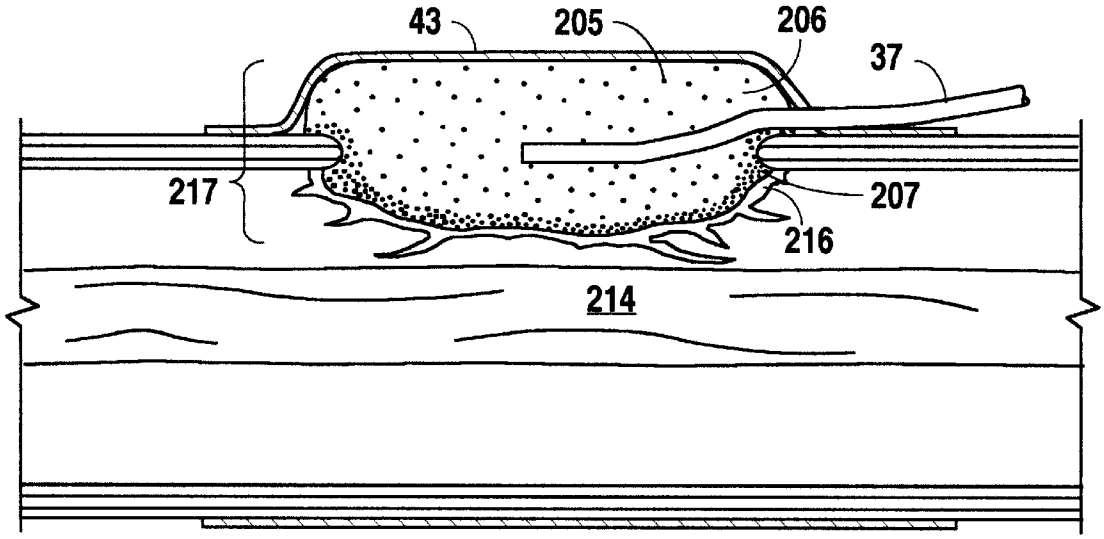

Fig. 15

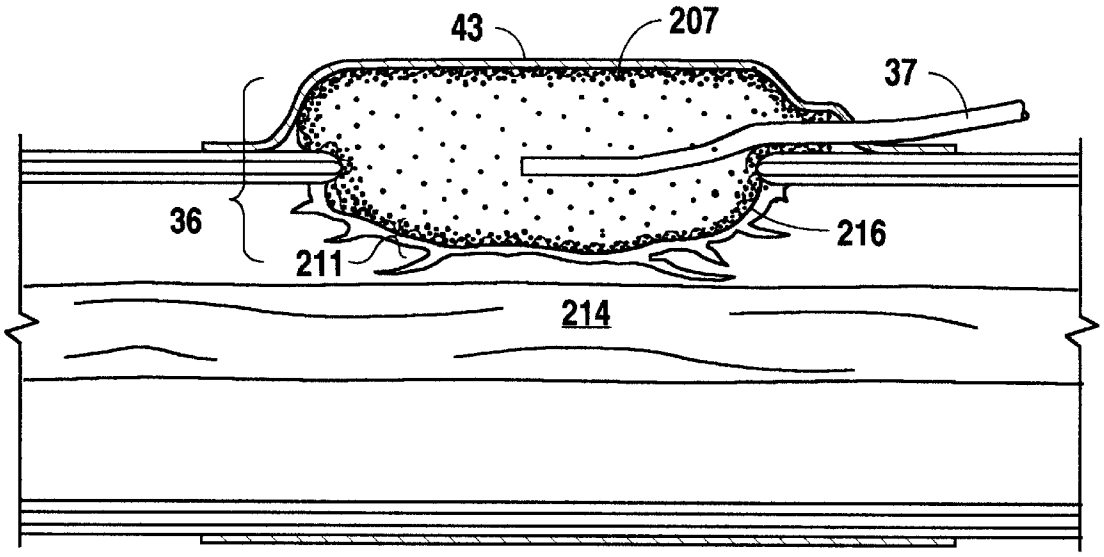

Fig. 16

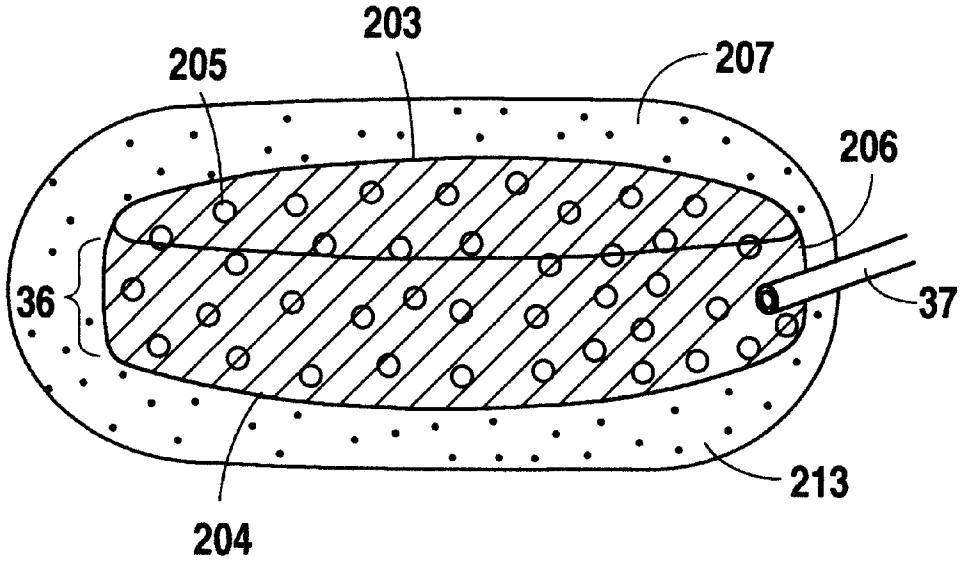

Fig. 17

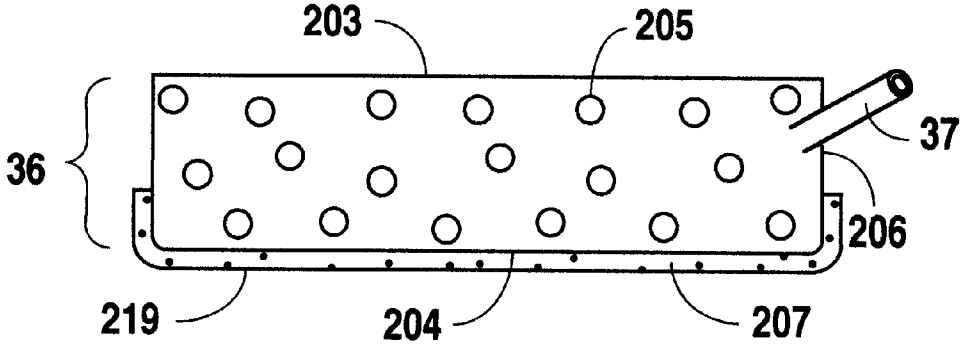

Fig. 18

WOUND THERAPY DEVICE

Applicant claims priority under 35 U.S.C. §119 of U.S. Provisional Application Serial No. 60/128,567 filed Apr. 9, 1999

BACKGROUND OF THE INVENTION

1. Field of the Invention

The present invention relates to the healing of wounds and, more particularly, but not by way of limitation, to an apparatus for closing wounds that is compact, self-contained, and includes a disposable wound fluids canister and a porous pad, which is biocompatible with the wound tissue to facilitate the healing of wounds, but does not adhere to the healing tissue.

2. Background Information

Wound closure involves epithelial and subcutaneous tissue adjacent to the wound migrating towards the center of the wound until it closes. Unfortunately, closure is difficult with large wounds or wounds that have become infected. In such wounds, a zone of stasis (i.e. an area in which localized swelling of tissue restricts the flow of blood to the tissues) forms near the surface of the wound. Without sufficient blood flow, the epithelial and subcutaneous tissues surrounding the wound not only receive diminished oxygen and nutrients, but are also less able to successfully fight bacterial infection and, thus are less able to close the wound naturally. Such wounds have presented difficulties to medical personnel for many years.

The most common technique for closing open wounds has been the use of sutures or staples. Although such mechanical closure techniques are widely practiced and often effective, they suffer a major disadvantage by providing tension on the skin tissue adjacent the wound. That is, the tensile force required to achieve closure using sutures or staples causes very high localized stresses at the suture or staple insertion point. Such stresses commonly result in the rupture of the tissue at those points, which can eventually cause dehiscence in wounds, providing additional tissue loss.

Moreover, some wounds harden and inflame to such a degree due to infection that closure by stapling or suturing is not feasible. Wounds not reparable by suturing or stapling generally require prolonged hospitalization with its attendant high cost, and major surgical procedures, such as grafts of surrounding tissues. Examples of wounds not readily treatable with staples or sutures include large, deep, open wounds; decubitus ulcers; ulcers resulting from chronic osteomyelitis; graft site wounds; and partial thickness burns that subsequently develop into full thickness burns. The use of skin grafts in these situations can result in the encapsulation of bacteria and other impurities.

The above problem is discussed in WO 93/09727 which proposes as a solution a procedure for draining the wound by applying a continuous negative pressure to the wound over an area sufficient to promote migration of epithelial and subcutaneous tissue toward the wound. Although WO 93/09727 deals in some detail with the clinical considerations of this kind of treatment, the apparatus described has certain practical shortcomings.

One problem with the apparatus described in the above prior document is that no means are disclosed for avoiding spread of infection from one patient to another or re-infection of the patient being treated. The pad in the wound drainage device can be modified with an antimicrobial agent, such as Neosporin, to limit the migration of

bacteria through the pad and into the vacuum tubes and canister while negative air flow is engaged as well as into the patient when the air flow has been disengaged.

An objective is to have a pad that (a) is made from biocompatible material and (b) has sufficiently small pore size that granulation tissue does not migrate into the pad. Granulation tissue is a matrix of collagen, fibronectin and hyaluronic acid carrying microphages, fibroblasts and neovasculature that aids in healing. This objective may be accomplished by using a pad that (a) has a tissue compatible lubricious surface, (b) has a growth factor impregnated surface, (c) has a molecular graft on the pad surface, and/or (d) is antimicrobial.

The pad utilized in the wound drainage device can be formed by several different means with the ultimate goal of providing a vacuum compatible portion and a healing tissue compatible portion. It is known in the prior art that foam can be blown to form porous materials; however, it is not disclosed in the prior art that foam can be blown into a wound cavity to form a biocompatible porous pad which is both compatible with the healing tissue and compatible with the vacuum and negative air flow as in the present invention. It is known in the prior art that surgical dressings, such as teflon or rayon, are useful because they are compatible with healing tissue, but it is not disclosed in the prior art the use of porous surgical dressings in conjunction with a porous pad as in the present invention. It is known in the prior art that biocompatible substances such as Hydromers can be used as a coating material to increase lubricity and/or reduce pore size of pads; however, the prior art does not disclose the use of such substances to coat pads as used in the present invention. It is known in the prior art that antimicrobial agents can be used to deter bacterial growth; however, the prior art does not disclose the use of such agents in conjunction with the pad of the present invention.

SUMMARY OF THE INVENTION

It is a primary object of the present invention to provide a wound closure apparatus that closes wounds without stressing the surrounding skin.

It is another object of the present invention to render technology like that disclosed in WO 93/09727 in a convenient, compact and self-contained, efficient and economically feasible system.

It is a further object of the present invention to provide a wound closure apparatus that includes a removable and disposable wound fluids collection canister to protect the wound closure apparatus from contamination.

It is still a further object of the present invention to provide a wound closure apparatus which makes use of a porous pad with a smooth outer surface having pores of a diameter of approximately 100 microns or smaller so as to prevent skin regrowth therein.

It is another object of the present invention to provide a porous pad which can be used in conjunction with a wound closure apparatus which pad has a tissue compatible lubricious surface, has a growth factor impregnated surface, has a molecular grafted surface and/or is antimicrobial.

In accordance with the present invention, there is provided a therapeutic apparatus for stimulating healing of wounds, said apparatus including a housing that contains a vacuum pump and a chamber for holding a disposable wound drainage collection cannister. The cannister preferably resides within the chamber and connects at an outlet with the vacuum pump and at an inlet with a pad. The pad is of a porous, compliant material which works well for

distributing gas pressure in the wound environment and which also complies with the negative air flow. The pad has a smooth outer surface that has pores close enough together so that the healing tissue will not grow into the pad. The pores on the outer surface of this pad less than one millimeter, normally in the approximate upper range of 100 microns (or less) in diameter in areas where the pad is in contact with the wound. The outer surface of the pad can consist of the outer portion of the pad itself, a material adhered to the pad, or a material placed over the pad. The pad is placed over the wound or pressed into the wound and adhesively secured thereto to create a sealed environment at the wound. The pad is designed such that when the pad is removed it does not disrupt the healing tissue. Thus, when the vacuum pump activates, it evacuates air from the canister and thence the wound environment, resulting in the application of negative pressure to the wound, which in turn tends to promote drainage of fluids flowing from the wound into the canister. After the canister is filled, it is removed from the chamber, disposed of, and replaced with another canister to continue therapy.

BRIEF DESCRIPTION OF THE DRAWINGS

FIG. **1** is a perspective view depicting the vacuum pump unit of a wound closure apparatus constructed according to the teachings of the present invention.

FIG. **2** is a right side plan view depicting the vacuum pump unit of FIG. **1**.

FIG. **2**A is a detail view of the latch **26** portion of FIG. **2**, partially cutaway to eliminate guide (or "key") **29** from the view and to show portions of latch **26** in sagital cross section.

FIG. **3** is a perspective view depicting a wound drainage collection canister for use in conjunction with the vacuum pump unit of FIG. **1**.

FIG. **4** is a rear plan view depicting the wound drainage collection canister of FIG. **3**.

FIG. **5** is a perspective view depicting the connection of a wound drainage collection canister of FIG. **3** to a wound coverage pad.

FIG. **6** is a front plan view in partial cross section depicting the connection of the wound drainage collection canister of FIG. **3** within the housing of the vacuum pump of FIG. **1**.

FIG. **6**A is a partial view of the apparatus shown in FIG. **6** except the canister is removed.

FIG. **7** is a perspective view depicting the filter carrier of the wound drainage collection canister.

FIG. **8** is a top plan view depicting the filter cap of the wound drainage **15** collection canister.

FIG. **9** is a schematic view depicting the control system for a wound closure apparatus constructed according to the teachings of the present invention.

FIG. **10** is a section through a wound showing the wound pad in place.

FIG. **11** is a porous wound pad being dipped into a solution.

FIG. **12** is a porous wound pad with varying porosity on two sides (with tube).

FIG. **13** is a side of a porous wound pad being melted by a heat source.

FIG. **14**A is a cross section of chemical being sprayed into the wound.

FIG. **14**B is a cross section of chemical being sprayed into the wound (with tube).

FIG. **15** is a cross section of a wound where spraying of the chemical has been completed (with tube).

FIG. **16** is a cross section of a wound where the sprayed chemical has hardened into the contours of the wound (with tube).

FIG. **17** is a porous sock wrapped around the porous wound pad (with tube).

FIG. **18** is a porous wound pad with a removable micropore layer (with tube).

DETAILED DESCRIPTION OF THE PREFERRED EMBODIMENT

As illustrated in FIGS. **1** and **2**, front housing **11** and rear housing **12** connect together using any suitable means such as screws and fasteners to provide wound closure vacuum pump **10** with a small, compact, and easily portable carrying case. Consequently, front housing **11** and rear housing **12** connect together to form handle **13** that permits easy carrying of the wound closure apparatus **10**. Except as may be otherwise evident from this description, the carrying case of the vacuum pump **10** is substantially as described and shown in WIPO Design No. DM/032185.

Front housing **11** includes power switch **15** that is movable between an on and off position to permit user control of the delivery of power to the wound closure apparatus **10**. Keypad **16** and liquid crystal display (LCD)**17** mount to front housing **11** to permit the programming of the wound closure apparatus **10**. Chamber **18** is defined by integrally formed interior side walls **100** and **101**, top wall **102**, bottom wall **103** and rear wall **104**. Side wall **100** is dependently attached to the interior of the front housing **11** by standard mounting hardware (not shown). The wound fluids collection canister **19**, illustrated in FIGS. **3–5**, is received within chamber **18**. Side walls **100** and **101** each include a key **29** and **30**, respectively, that aid in the alignment of wound fluids collection canister **19** within chamber **18**. Further, front housing **11** includes latch **26** to secure the wound fluids collection canister **19** within chamber **18**.

Rear housing **12** includes arm **14** pivotally mounted to it within recess **110**. An identical arm pivotally mounts to the opposite side of rear housing **12** within an identical recess. Arm **14** and its corresponding arm mounted on the opposite side of the rear housing **12** pivot from within their recesses to a position where they support the wound closure apparatus **10** at an angle. Arm **14** and its corresponding arm angularly support the wound closure apparatus **10** to permit easier user access to keypad **16**. Arm **14** and its corresponding arm may also be used to permit hanging of apparatus **10** from a hospital bed foot board.

Canister **19** has a shape as shown in FIGS. **3** to **6**. As illustrated in FIGS. **3** to **6**, canister **19** includes side walls **20** and **21**, top wall **23**, bottom wall **24**, back wall **22** and front wall **25** that define the rectangular chamber for receiving blood, and other fluids emitted from a wound. Side walls **20** and **21** include key ways **27** and **31** respectively, that receive a respective one of keys **29** and **30** to provide easy alignment of canister **19** within chamber **18**. Furthermore, key way **27** includes recess **28** that receives latch **26** to fasten canister **19** within chamber **18**.

Front wall **25** of canister **19** includes raised portion **32** extending therefrom to furnish a window that permits a user to determine the level of wound fluids within canister **19**. Accordingly, raised portion **32** is transparent so that the level of wound fluids within canister **19** may be visually determined. Raised portion **32** includes side walls **110** and **111**, top wall **112**, bottom wall **113**, and front face **114** that define

a chamber which opens into the chamber defined by side walls **20** and **21**, top wall **23**, bottom wall **24**, back wall **22** and front wall **25** of canister **19**. Front face **114** of raised portion **32** includes graduations that demarcate the volume of wound fluid within canister **19**. Additionally, side walls **110** and **111** of raised portion **32** include ridges that provide a gripping surface for the user during the insertion and removal of canister **19** from chamber **18**.

Although raised portion **32** is transparent to permit the determination of the level of wound fluids within canister **19**, side walls **20** and **21**, back wall **22**, top wall **23**, bottom wall **24**, and front wall **25** are opaque so that they are only translucent. As an alternative, the portions of canister **19** surrounding filter **46** may also be transparent. This enables a user to visually check for signs of contamination of filter **46**. In this preferred embodiment, side walls **20** and **21**, back wall **22**, top wall **23**, bottom wall **24**, front wall **25**, and raised portion **32** of canister **19** are fabricated from a plastic material.

Canister **19** includes inlet **35** that is formed integrally with top wall **112** of raised portion **32**. Inlet **35** is cylindrical in shape and communicates with the interior of canister **19** to permit the transfer of wound fluids into canister **19**. In this preferred embodiment, inlet **35** is also fabricated from a plastic material.

In order to prevent liquids sucked into the canister **19** from splashing directly onto cap **49**, which mask the outlet **44**, and to reduce foaming within the canister **19**, inlet **35** has a blind inner end. Inlet **35** has a slot **35A** so that drainage fluid is deflected downwardly into the raised handle portion **32** of the canister **19**. Handle portion **32** may communicate with the main part of the canister **19** through one or more holes in wall **25**. It is desirable to avoid foaming because this can give a false reading when a capacitance sensing device is used to sense when the canister **19** is filled. An anti-foaming material, e.g. a silicone, may be added to the canister **19**, e.g. by coating the interior walls. It may also be advantageous to include a gel-forming substance, e.g. a polyacrylamide of modified starch in order to immobilize the drainage fluid. This is particularly useful if the apparatus is likely to be tilted.

Wound fluids (i.e. drainage) are communicated through inlet **35** into canister **19** via pad **36** and hoses **37** and **38**. In this preferred embodiment, the portion of the pad **36** next to the vacuum tube **37** (i.e. inner portion or surface) is fabricated from an open cell polyurethane or polyether foam. The outer surface of the pad **36** in contact with the wound cavity **216** can consist of the same material as the inner portion or surface next to the vacuum tube **37** where the size of the pores is 100 microns of less. Hose **37** is inserted within pad **36** by making an incision in pad **36** and inserting the end of hose **37**. Hose **37** can then be secured within pad **36** using any suitable means such as an adhesive or a flange. Preferably, the porous pad **36** has an elongated hole **300** (See FIG. **11**) for the drainage tube **37** which is an interference fit with the tube **37**. The hoses **37** and **38** are preferably made from medical grade PVC tube. Hose **38** mounts within inlet **35** using any suitable means such as adhesive or welding. Hoses **37** and **38** include luer lock connectors **39** and **40**, respectively, (or the equivalent, such as any known quick disconnect type coupling) that attach together to permit communication between hoses **37** and **38**. Furthermore, hoses **37** and **38** include pinch clamps **41** and **42**, respectively, that are capable of sealing their respective hose **37** or **38** to prevent the flow of wound fluids. The porous pad **36** is preferably packaged in a sterile container together with its connector and clamp. When packaged, the clamps will be in their open condition.

The communication of wound fluids into canister **19** requires the securing of pad **36** over a wound. Pad **36** is secured over a wound using cover **43** which is fabricated from a plastic material and includes an adhesive on one side that sticks to human skin. Wound cover **43** is conveniently a surgical drape material comprising a sheet of elastomeric material coated peripherally or overall with a pressure-sensitive adhesive, such as an acrylic adhesive. The elastomeric or rubbery nature of the wound cover **43** is important because it accommodates changes in pressure in the wound area during intermittent operation of the vacuum pump **84**. The wound cover **43** is preferably a polyurethane film with a removable backing sheet, i.e. of polythene to protect the adhesive surface.

A high degree of reticulation in the inner portion or surface of the porous pad **36** next to the vacuum tube **37** is desirable to achieve good permeability when the pad **36** is under suction. The outer surface of the pad **36** next to the wound, however, is smooth and contains pores of approximately 100 microns in diameter to allow for vacuum air flow through the pad **36** while preventing the healing tissue from cross linking with the pad **36**. While the upper range of pore size is not exactly known, it is between 100 microns and 1000 microns (one millimeter). The lower end of the pore size is simply large enough to allow air and fluids to flow therethrough which could be as small as one micron.

There are several different ways to prepare a pad **36** for use with the wound drainage apparatus **10** which contains an outer surface with the preferred specifications. One way is to make a porous pad **36** out of a material which consists entirely of micropores (not shown) with a diameter of approximately 100 microns or less, or blow the pad **36** in such a way that the portion to be inserted into the wound cavity contains the micropores of a diameter of approximately 100 microns or less as will be subsequently described. A micropore is an opening in the pad **36** of approximately 100 microns or less.

Referring to FIGS. **11** and **12**, a second way to create the pad **36** is to dip the portion of the pad **36** which is to be placed inside the wound in a liquid coating material **201** which dries into the pad **36** acting as a bulking agent thereby reducing the diameter of the pad pores **205** to approximately 100 microns or less. This effectively creates a smooth outer surface with a pore size of approximately 100 microns or less, hereinafter called micropores **207**, to be placed in the wound cavity **216**. An inner surface can have pores **205** of a size of greater than 100 microns which have a greater vacuum compatibility with the vacuum tube **37**.

In FIG. **11**, a porous wound pad being dipped into a solution **201** is shown.

FIG. **11** shows a porous wound pad **36**, with top **203**, bottom **204**, and side **206**. The pores **205** of the porous wound pad **36** are a vacuum compatible size. A vacuum tube **37** is shown in the side **206** of the porous wound pad **36**. The pad **36** is being dipped to approximately 1 millimeter into a liquid coating material **201**, such as a liquid hydrophilic foam solution, held in a flat tray **202**, which when hardened acts as a bulking agent to form a smooth micropore layer **211** with micropores **207** of a diameter of approximately 100 microns or less. This allows for the flow of negative air pressure and fluids through the pad **36** without compromising the healing tissue surface. The coating of the pad **36** can occur directly before insertion into the wound cavity **216**, allowing enough time for drying, or the pad **36** can be coated during manufacturing. Furthermore, for certain types of wounds it may be necessary to mix an antimicrobial agent

such as Neosporin with the liquid coating material **201** so as to create a modified pad surface which is difficult for bacteria to stick to thus preventing bacterial migration through the pad **36**. The addition of the coating to the pad **36** does not hamper the ability to trim the pad **36** to conform to the wound cavity **216**.

FIG. **12** shows a cross section of a porous wound pad **36** with varying porosity on one surface (with tube). This varying porosity can result from the porous pad **36**, with top **203**, bottom **204** and side **206**, being dipped in the liquid coating material **201** as described in FIG. **11**. This pad **36** contains an upper pore layer **212** with vacuum compatible pores **205** and a smooth micropore layer **211** with healing compatible pores **207** which have a diameter of approximately 100 microns or less. By having a size of approximately 100 microns or less, tissue cannot grow into the micropore layer **211**. Again the liquid coating material **201** (a) can be modified with an antimicrobial agent such as Neosporin to deter bacterial migration through the pad **36**, or (b) forms a tissue compatible lubricious surface that is growth factor impregnated or is a molecular graft.

Referring to FIG. **13**, another way of creating the optimum outer pad surface is to take a porous pad **36** with pores **205** that may have a diameter greater than 100 microns and heat that pad **36** on the side to be placed inside the wound cavity **216** with a heat source **208** so as to shrink or melt the pore size to a diameter of approximately 100 microns or less while maintaining a smooth texture. In FIG. **13**, a side of a porous wound pad being melted by a heat source is shown. The pad **36**, with top **203**, bottom **204**, and side **206** and containing pores **205** of vacuum compatible pore size, is shown on a hot plate **208**. This hot plate **208** has a standard current adapter **209** and plug **210**. While a hot plate **208** was used in this illustration, any heat source could be used. The heat source **208** was simply necessary to melt the surface of the pad **36** partially so as to create a smooth micropore layer **211** with healing compatible micropores **207** of approximately 100 microns or less.

Referring to FIGS. **17** and **18**, the porous pad **36** can be made with a smooth outer surface of approximately 100 microns or less by taking a pad **36** with vacuum compatible pores **205** and placing the pad **36** within a porous sock **213** which is smooth and contains pores **207** with a diameter of approximately 100 microns or less. The sock-covered pad **36** is then placed inside the wound cavity (not shown in this Figure). FIG. **17** shows a porous wound pad **36** situated within a porous sock **213**. The pad **36**, with top **203**, bottom **204**, and side **206**, has vacuum compatible pores **205** and a vacuum tube **37** for use in extending the negative air pressure through the pad **36**. The porous sock **213** contains healing compatible pores **207** of a diameter of approximately 100 microns or less and acts as a covering being placed over the porous wound pad **36** before insertion into the wound cavity **216**. If any trimming of the pad **36** is needed it can be done before the pad **36** is placed in the sock **213** before insertion into the wound cavity **216**.

Referring specifically to FIG. **18**, a variation of the technique demonstrated in FIG. **17** would be to affix a smooth porous membrane **219** only to the face of the pad **36** that is to be placed into the wound cavity **216**. This membrane **219** contains pores of a diameter of approximately 100 microns or less. The porous sock **213** or membrane **219** may be composed of TEFLON, rayon, or a similar material. Knit rayon film is often used for conventional dressings to try to accelerate the growth of granulation tissue. The membrane **219** may form a tissue compatible lubricious surface that is growth factor impregnated and antimicrobial. In FIG. **18**, a porous wound pad **36** with a removable membrane **219** is shown. The pad **36**, with top **203**, bottom **204**, and side **206** and vacuum compatible pores **205**, contains a vacuum tube **37** for use in extending the negative air pressure through the pad **36** for aspiration of the wound cavity **216**. The removable membrane material **219**, such as teflon or rayon, contains healing compatible micropores **207** of a diameter of 100 microns or less. This membrane material **219** can be placed around the portion of the pad **36** which is to go into the wound cavity **216**. The membrane **219** can be held in place on the pad **36** by any biocompatible means such as an adhesive.

Referring to FIGS. **14** through **16**, another way in which the pad **36** is made is by spraying a nontoxic chemical substance **215** directly into the wound cavity **216**. The chemical substance **215** hardens into the shape of the wound cavity **216** when placed directly into the wound **216**. This forms a pad **36** such that the surface of the pad **36** next to the healing tissue is smooth and has pores of a diameter of approximately 100 microns or less. A chemical substance (not shown) can also be sprayed in a sterile environment before insertion into the wound cavity **216**. When the pad **36** is formed on an external sterile surface it is allowed to harden slightly into a foam like substance and then pressed into the wound cavity **216** so as to conform to the wound. The chemical substances used in these circumstances are sprayed so as to make a pad **36** with a smooth outer surface containing pores with a diameter of approximately 100 microns or less.

FIG. **14A** shows a cross section of chemical being sprayed into a wound. A nontoxic chemical substance **215** is sprayed from the spray nozzle **218** of a container (not shown). The chemical substance **215** is under pressure such that when it is sprayed into the wound cavity **216** of the body **214** the gas is expelled from the chemical substance **215** which allows the chemical substance **215** to expand from a liquid phase to a solid porous phase which conforms to the shape of the wound cavity **216** (See FIG. **15** where the solidification of the pad **36** is shown with a wound cover **43** placed over the pad **36** and tube **37** assembly.). The vacuum tube **37** should be placed in the cavity **216** during the spraying of the chemical substance **215** before solidification occurs (See FIG. **14B**). This porous pad **36** which is formed (See FIG. **16**) is equally vacuum compatible next to the vacuum tube **37** as well as compatible with the healing tissue containing a smooth surface and only micropores **207** of approximately 100 microns of less in diameter in contact with the wound cavity **216**.

The type of pad **36** can vary based on the type of wound involved. In addition, the type of wound may dictate that an antimicrobial agent, such as Neosporin, be used in the pad **36** entirely or on the surface which is in contact with the wound so as to give a topical antimicrobial effect.

In use, the porous pad **36** is cut to a size which corresponds closely to the edge of the wound with the objective of packing the pad **36** into the wound cavity **216** so that it contacts the surface of the cavity **216**, rather than bridging the cavity **216**. As depicted in FIG. **10**, the cavity **216** may be extensive and there may be little or no tissue coverage to the bone **212**. This is illustrated diagrammatically in FIG. **10**. FIG. **10** is a cross-section through a wound showing the porous pad **36** packed in the wound cavity **216**. It is important that the pad **36** should be firmly packed into the recesses of the wound cavity **216**. Drainage tube **37** terminates within the center of the porous pad **36**. Surgical drape **43** extends over the porous pad **36** and is adhered to intact skin around the periphery of the wound. Drape **43** is also

firmly adhered around the tube **37** to prevent leakage of air. A wound cover **43** is then adhered to the surrounding skin and around the drainage tube **37** to provide an air-tight seal around the wound.

As illustrated in FIGS. **2**, **4** and **6**, canister **19** includes outlet **44** that mounts over port **45** to permit wound closure apparatus **10** to draw wound fluids into canister **19**. Outlet **44** is cylindrically shaped and formed as an integral part of back wall **22** by outer wall **33** and inner wall **50** which are interconnected by end wall **34**. Passageway **52**, defined in part by interior wall **50** and in part by filter cap **49**, provides the actual conduit for outlet **44** between the interior and exterior of canister **19**. The placement of canister **19** within recess **18** such that outlet **44** resides over port **45** couples canister **19** to a vacuum pump **84**. The vacuum pump **84** removes air from canister **19** to create a vacuum pressure within canister **19**. That vacuum pressure is then transmitted to a wound site through hoses **37** and **38**, thereby not only enabling therapeutic use of system **10**, but also tending to promote wound drainage. Any wound drainage fluid is then drawn through pad **36** and hoses **37** and **38** into canister **19**.

Outlet **44** resides near top wall **23** of canister **19** to ensure efficient operation of the vacuum pump **84**. That is, the vacuum pump **84** removes the most air from canister **19** when the air does not have to first bubble through wound fluids contained in canister **19**. Consequently, with outlet **44** positioned near the top of canister **19**, the vacuum pump **84** removes air directly from canister **19**, and it is only during the final filling of canister **19** that air must bubble through wound fluids. Preferably, as described below, the apparatus includes detecting and warning means which operates before the level of drainage fluid reaches either the inlet or outlet tube so that a fresh canister **19** can be installed.

In removing fluids from a wound utilizing wound closure apparatus **10**, a major safety concern is preventing wound fluids from contaminating the vacuum pump **84**. Accordingly, filter **46** mounts over outlet **44** utilizing filter carrier **48** and filter cap **49** to block the flow of wound fluids to outlet **44** so that wound fluids remain within canister **19** and do not flow into the vacuum pump **84**. In this preferred embodiment, filter **46** is a 0.2 micron hydrophobic membrane filter providing a bacterial barrier, although other filters may be substituted as appropriate.

As illustrated in FIG. **7**, filter carrier **48** includes face **53** formed integrally with lip **54**. Face **53** includes groove **56** formed therein, while lip **54** supports brace **55** in its interior. Filter **46** fits within groove **56** of face **53** and is supported within filter carrier **48** by brace **55** of lip **54**. An O ring **53A** is fitted in peripheral recess of filter carrier **48** to accommodate manufacturing tolerances and ensure a fluid tight seal with filter cap **49**.

As illustrated in FIGS. **6** and **8**, filter cap **49** includes cylindrical portions **57** and **58**, which are formed integrally (with annulus **57'** spanning there between), to hold filter carrier **48** within passageway **52** of outlet **44**. To mount filter **46** over passageway **52**, filter **46** is first placed within filter carrier **48** as described above. Filter carrier **48** is then positioned within filter cap **49** such that face **53** abuts annulus **57'** of filter cap **49** and lip **54** of filter carrier **48** resides within annular lip **50'** of outlet **44**. Accordingly, when cylindrical portion **57** of filter cap **49** mounts over outlet **44**, the front face **53** of filter carrier **48** and the outer edges of filter **46** abut annulus **57'** to secure filter **46** within passageway **52**. Filter cap **49** attaches to outlet **44** using any suitable means such as an adhesive or welding. Filter cap **49** is completely sealed except for aperture **51** positioned on top of filter cap **49**. Aperture **51** communicates with port **45** via passageway **52** of outlet **44** to permit the vacuum pump **84** to draw air from the interior of canister **19**.

As illustrated in FIGS. **2** and **6**, port **45** includes O-ring **59** mounted thereabout to provide a fluid tight seal between port **45** and inner wall **50** of outlet **44**. Port **45**, mounts through rear wall **104** of chamber **18** using any suitable means such as nuts **60** and **61**. Furthermore, line **62** attaches to the rear of port **45** using any suitable means such as a clamp to couple port **45** to the vacuum pump **84**.

Switch **63** protrudes through rear wall **104** of chamber **18** to produce a signal indicating when canister **19** properly and securely resides within chamber **18**. In this preferred embodiment, switch **63** is a normally open push button switch that mounts on rear wall **104** of chamber **18** using any suitable means such as a bracket. When canister **19** is properly positioned within chamber **18**, its rear wall **22** presses the head of switch **63**, closing switch **63** so that it provides a signal indicating that canister **19** properly resides within chamber **18**.

Fill sensor **64** resides adjacent side wall **101**, exterior to chamber **18**. Fill sensor **64** provides a signal that indicates when canister **19** is filled with wound debris. In this preferred embodiment, fill sensor **64** is a capacitive sensor that mounts on side wall **101** of chamber **18** using any suitable means such as a bracket or appropriate adhesive material. Fill sensor **64** has a sensing profile **64A** which determines the point at which the capacitance measurement is made. When wound fluids have reached the level within canister **19** which corresponds to the location of the sensing profile **64A**, the capacitance within canister **19** as 'seen' by fill sensor **64** changes, resulting in fill sensor **64** outputting a signal indicating that canister **19** is filled with wound fluids to the level at which the sensing profile is located. The position of this sensing profile behind wall **101** can be changed (see FIGS. **6A**) to provide an optimum balance of space and volume utility.

As illustrated in FIG. **2A**, latch **26** generally comprises latch pin **65**, handle **66**, latch guide sleeve **68A** and spring **67**. Latch pin **65** comprises a proximal end **65A** and distal end **65B**. Latch guide sleeve **68A** abuts the inner surface of front housing **11** and is held securely in place from the outer side of front housing **11** by nut **68B**. Handle **66** screws onto the proximal end **65A** of latch pin **65** and is locked in position by nut **69A**.

In the preferred embodiment, cover **68** over nuts **69A** and **68B** provides a surface against which handle **66** abuts, thus preventing end **65B** from excessively entering chamber **18** as will be understood further herein. Cover **68** also provides aesthetic enclosure of nuts **69A** and **68B**. Dependent attachment of side wall **100** (chamber **18**), as described herein above, is such that side wall **100** abuts latch guide sleeve **68A** on the side distal front housing **11**. Further, this arrangement causes distal end **65B** of latch pin **65** to project into chamber **18** under the force of spring **67** (shown partially cut away). Spring **67** resides circumferentially about latch pin **65** within an axial bore of latch pin guide **68A**. Spring **67** exerts force between distal end **65B** of latch pin **65** and an annulus within the axial bore of latch pin guide **68A**. A transverse slot in the distal end of latch pin guide **68A** receives end **65B** of latch pin **65**, providing rotational alignment of end **65B** and further recess for end **65B** when a user "pulls" handle **66** in an axial direction.

Latch **26** operates to ensure canister **19** remains secured within chamber **18**. End **65B** of latch **26** terminates in a point that protrudes through key **29** into chamber **18**. During the

placing of canister **19** within chamber **18**, key way **27** of canister **19** forces the point **65**B of the latch pin within key **29**. However, once canister **19** has been properly positioned within chamber **18**, recess **28** resides below latch pin end **65**B so that spring **67** biases the point **65**B of latch pin **65** into recess **28** to prevent the removal of canister **19** from chamber **18**. The removal of canister **19** from chamber **18** is accomplished by grasping handle **66** and pulling the point **65**B of latch pin **65** from recess **28**. With the point of latch pin **65** no longer within recess **28**, canister **19** may be pulled from chamber **18** using its raised portion **32**.

As illustrated in FIG. **9**, wound closure apparatus **10** preferably plugs into a standard 115/120 VAC power source (e.g. an outlet) to supply power to control system **70**. Alternative embodiments (not shown, although similar) are readily adapted for 220 VAC power by changing the power cord and appropriately rewiring the taps of the transformer within DC power supply **71**, as is readily known in the art. The application of power to control system **70** is regulated by power switch **15** which is a standard push button on/off switch. With power switch **1 5** depressed, DC power supply **71** receives the 115/120 VAC signal and converts it into a 12 VDC signal for use by fan **74** and vacuum pump **84**. A conventional voltage regulator **96** steps down the voltage to +5V for use by each of the other DC components **16**,**17**, **63**, **64**, **72**, and **75**. Voltage regulator **96** connects to keypad **16**, LCD **17**, switch **63**, fill sensor **64**, microcontroller **72**, transducer **75**, and-tilt sensor **82** to supply each of them with the +5V DC signal. Microcontroller **72** links to solid state relays (MOSFETs) **97** and **98** for controlling the provision of the 12 VDC power supply to fan **74** and pump motor **83**, respectively.

As illustrated in FIG. **1**, once power switch **15** is depressed, a user employs keypad **16** and LCD **17** to select the operating parameters for wound closure apparatus **10**. Wound closure apparatus **10** stores the previously selected operating parameters so that upon power initialization, LCD **17** displays the phrase "NEW PATIENT" with the word "NO" over arrow button **76**, and the word "YES" over arrow button **77**. If the user presses arrow button **76** to answer no, wound closure apparatus **10** will operate at the previously selected parameters. After answer no, the user pressures on/off button **78** to begin operation of wound closure apparatus **10**.

Conversely, if the user presses arrow button **77** to indicate a new patient, wound closure apparatus **10** will operate either under default values or allow the user to select the operating parameters. To operate under default parameters, the user presses on/off button **78** after pressing arrow button **77**. However, to select his or her own values, the user presses option button **79** after pressing arrow button **77**.

Upon the pressing of options button **79**, LCD **17** displays a bar graph representing the spectrum of available vacuum pump pressures and a numerical representation of the vacuum pump pressure presently displayed by the bar graph. The user changes vacuum pump pressure using arrow buttons **76** and **77**. The pressing of arrow button **76** reduces vacuum pump pressure, while the pressing of arrow button **77** increases vacuum pump pressure. After selecting the desired vacuum pump pressure, the user presses option button **79** to save the selected vacuum pump pressure.

Once the selected vacuum pump pressure has been saved, LCD **17** displays the pump operation times available to the user. The user may program wound closure apparatus **10** to pump either continuously or intermittently. Thus, LCD **17** displays the word "CONTINUOUS" over arrow button **76***b* and "INTERMITTENT" over arrow button **77**. The user selects continuous operation by pressing arrow button **76** followed by on/off button **78** to activate the vacuum pump **84**. In its continuous mode, wound closure apparatus **10** runs its vacuum pump **84** continuously until on/off button **78** is pressed again.

If the user presses arrow button **77** to select intermittent operation, LCD **17** displays a bar graph representing the minimum and maximum on times for the vacuum pump **84**. LCD **17** also displays the phase "ON TIME" and the numerical value presently displayed by the bar graph. A user decreases the on time of the vacuum pump **84** by pressing arrow button **76** and increases the on time of the vacuum pump **84** by pressing arrow button **77**. After selecting the desired on time, the user presses options button **79** to save the selected on time value.

LCD **17** then displays a second bar graph representing the off time for the vacuum pump **84** with the phrase "OFF TIME" and the numerical value presently depicted by the bar graph. Again, arrow buttons **76** and **77** are pressed to increase or decrease, respectively, the off time for the vacuum pump **84**. After selecting the off time, the user presses options button **79** followed by on/off button **78** to operate wound closure apparatus **10** using the selected parameters.

Keypad **16** includes setting button **80** to permit the user to sequentially display the currently selected operating parameters of wound closure apparatus **10**. Keypad **16** further includes delay button **81** to permit the user to deactivate an alarm sounded in response to an improper operating condition of wound closure apparatus **10**. Delay button **81** provides the user with the ability to silence alarms so that the alarm will not have to be listened to during the correction of the problem.

Any new alarm conditions occurring within the fifteen minute period ("delay period") after the pressing of delay button **81** will not be indicated by an audible alarm. However, the pump will still be deactivated when appropriate, even during the delay period.

Again referring to FIG. **9**, microcontroller **72** is a multiport microprocessor with a ten-bit analog to digital ("A/D") converter having associated memory that stores the program directing microcontroller **72** during its controls of wound closure apparatus **10**. After receiving and storing the user selected operational parameters and receiving an on signal due to the pressing of on/off button **78**, microcontroller **72** activates pump motor **83** which, in turn, drives vacuum pump **84** to begin the removal of air from canister **19**.

As vacuum pump **84** operates, it draws air from within canister **19**, into line **62** via outlet **44** of canister **19** and port **45**. Line **62** connects to filter **85** and transducer **75** via T-junction **91**. Filter **85** is similar to filter **46** and thus ensures no wound fluids contaminate vacuum pump **84**. Filter **85** communicates with pump **84** via-T-junction **88** and one arm of the latter is connected to bleed valve **86**. Bleed valve **86** communicates with the atmosphere to release pressure developed within line **62** by vacuum pump **84** after microcontroller **72** deactivates vacuum pump **84**. Bleed valve **86** is sufficiently small to ensure that it generally does not affect the vacuum pressure levels achieved by vacuum pump **84** as it evacuates air from canister **19**, except to prevent overpressurization beyond 250 mm Hg and to prevent erratic operation of the vacuum pump **84** at very low pressure settings.

In the preferred embodiment, an orifice of 0.5 mm diameter is especially preferred for bleed valve **86**. Valve **86** or

the equivalent is particularly important for enabling intermittent application of negative pressure, as the orifice **86** allows for gradual release of the negative pressure (over a period of about fifteen seconds) when the pump motor **83** is de-actuated. Bleed valve **86** is positioned outside housing **11** to facilitate un-clogging of aperture **86** in the event of a blockage. An aperture is provided in bleed valve **86**, which is machined from stainless steel. Flow control orifices would be alternatives.

Line **62** also includes T-connector **91** to connect it with line **92**. Line **92** is connected to tank **94** which acts as a damper to pressure changes in line **62**. This dampening effect, facilitated by restrictor **89** in line **93** between transducer **75** and T-junction **91**, causes the pressure measured by transducer **75** to be an accurate indication of actual wound site pressure. Transducer **75** communicates with line **62** via line **93** to measure tank **94** pressure and produce an electrical signal representative of that pressure. Transducer **75** outputs its pressure signal to microcontroller **72**.

Microcontroller **72** utilizes the pressure signal to control the speed of pump motor **83**. As previously described, the user selects either a default vacuum pump pressure or a desired vacuum pump pressure for the operation of wound closure apparatus **10**. After receiving the wound pressure signal from transducer **75**, microcontroller **72** compares the wound pressure with the user selected pressure. If the wound pressure is higher than the user selected vacuum pump pressure, microcontroller **72** reduces pump motor speed to decrease vacuum pump pressure and thus the pressure at the wound. Conversely, if the wound pressure is less than the user selected vacuum pump pressure, microcontroller **72** increases the speed of pump motor **83** resulting in an increase in the vacuum pressure applied at the wound.

Microcontroller **72** controls pump motor **83** by varying the amount of voltage received by pump motor **83**. That is, microcontroller **72** receives the 12 VDC signal from DC power supply **71** and outputs a voltage between 0 and 12 VDC to pump motor **83** to control its speed in accordance wit the user selected vacuum pump pressure value. Accordingly, microcontroller **72** employs feedback to ensure that the wound experiences the user selected vacuum pump pressure. If the target pressure is not reached after a period of five minutes, microcontroller **72** deactivates motor **83** and sounds the audible alarm. Additionally, the feedback signal prevents maximum vacuum pump pressure from being exceeded. If the wound pressure measured by transducer **75** exceeds a maximum safe vacuum pump pressure microcontroller **72** deactivates pump motor **83** and activates alarm **95** to signal a malfunction.

Wound closure apparatus **10** includes fan **74** to cool pump motor **83** and printed circuit ("PC") board **200** during the operation of the wound closure apparatus **10**. In the preferred embodiment, microcontroller **72** controls fan **74** to always operate while power is being supplied. In alternative embodiments, however, microcontroller **72** controls fan **74** to operate only in relation to motor **83**, because it is only necessary for fan **74** to operate if motor **83** is also operating. In such alternative, as long as pump motor **83** operates, microcontroller **72** runs fan **74**. However, when microcontroller **72** deactivates pump motor **83** it also deactivates fan **74**.

Control system **70** includes fill sensor **64** to provide a signal to microcontroller **72** that indicates when canister **19** is completely filled with wound fluids. After receiving a signal from fill sensor **64**, microcontroller **72** deactivates pump motor **83** and fan **74** and activates alarm **95** to signal the user that canister **19** must be replaced.

Control system **70** includes switch **63** to prevent users from operating wound closure apparatus **10** without a canister properly installed. If a canister is not properly installed, switch **63** remains open and therefore outputs no signal to microcontroller **72**. If microcontroller **72** receives no signal from switch **63**, indicating no canister within chamber **18**, it will not supply power to pump motor **83** even after a user has pressed on/off button **78**. Furthermore, microcontroller **72** activates alarm **95** to signal the user that either a canister is not properly installed or is improperly installed within chamber **81**. Microcontroller **72** operates pump motor **83** only if switch **63** is depressed to provide a signal indicating the proper placement of a canister within chamber **18**.

Control system **70** includes tilt sensor **82** to prevent operation of wound closure apparatus **10** if it is tilted excessively. Excessive tilting of wound closure apparatus **10** during operating diminishes the efficiency of removal of wound fluids and, more importantly, might result in either the contamination of vacuum pump **84** or the spilling of wound fluids. Thus, if wound closure apparatus **10** tilts along any of its axes beyond a predetermined angle (approximately 45° in this preferred embodiment), tilt sensor **82** outputs a signal to microcontroller **72**. In response, microcontroller **72** deactivates pump motor **83** and activates alarm **95** to signal the user of the excessive tilt situation. In this preferred embodiment, tilt sensor **82** may be implemented with any standard mercury switch. A predetermined delay (e.g. 30 seconds) may be incorporated in the circuitry so that the tilt alarm does not operate immediately.

Although the invention has been described with reference to specific embodiments, this description is not meant to be construed in a limited sense. Various modifications of the disclosed embodiments, as well as alternative embodiments of the inventions will become apparent to persons skilled in the art upon the reference to the description of the invention. It is, therefore, contemplated that the appended claims will cover such modifications that fall within the scope of the invention.

What is claimed is:

1. A method of using a therapeutic apparatus for stimulating the healing of wounds in mammals comprising the steps of:

inserting a porous pad into or on said wound such that said porous pad is in contact with said wound, wherein said porous pad has at least a partial outer surface and an inner body, said outer surface being adapted for contact with a surface of said wound with small first pores no larger than about 100 microns in diameter to enhance biocompatibility;

securing said porous pad within said wound with a dressing cover to maintain a negative pressure at the site of said wound;

generating a negative pressure at said wound through said porous pad; and

collecting fluids from said wound through said porous pad.

* * * * *