UNITED STATES DISTRICT COURT
NORTHERN DISTRICT OF ILLINOIS

M.E.A.C. ENGINEERING LTD., 2 ABA HILEL ST., APT. 5808 RAMAT GAN 5250601, ISRAEL Plaintiff, v. MEDELA LLC 1101 CORPORATE DRIVE MCHENRY, IL 60050 AND MEDELA HOLDING AG LÄTTICHSTRASSE 4B BAAR ZUG, 6340 SWITZERLAND Defendants.	Case No. 1:23-cv-14045 Hon. Sharon Johnson Coleman

MEDELA'S ANSWER AND COUNTERCLAIMS TO
COMPLAINT FOR PATENT INFRINGEMENT

Defendants Medela LLC and Medela Holding AG (collectively, "Medela" or "Defendants") hereby submit this Answer to Plaintiff M.E.A.C. Engineering LTD's ("MEAC" or "Plaintiff") Complaint for Patent Infringement (the "Complaint"). Medela denies every allegation in the Complaint that is not expressly admitted below.

THE NATURE OF THIS ACTION

1. Medela denies that it infringes, or has ever infringed, U.S. Patent Nos. 8,506,554 (the "'554 Patent") or 8,858,534 (the "'534 Patent") (collectively, the "Asserted Patents"). Medela further denies that it was made aware of the Asserted Patents prior to the filing of the Complaint.

Medela lacks knowledge or information sufficient to form a belief as to the truth of the remaining allegations contained in Paragraph 1 of the Complaint and, therefore, denies them.

THE PARTIES

2. Medela lacks knowledge or information sufficient to form a belief as to the truth of the allegations contained in Paragraph 2 of the Complaint and, therefore, denies them.

3. Medela admits that Medela LLC is located at 1101 Corporate Drive, McHenry, IL, 60050 and distributes the accused products in the United States. Medela denies the remaining allegations contained in Paragraph 3 of the Complaint.

4. Medela AG is not a named Defendant in this action. However, Medela admits that Medela Holding AG is the parent company of both Medela AG and Medela LLC and is located in Baar, Switzerland. Medela denies all remaining allegations contained in Paragraph 4 of the Complaint.

5. Medela denies the allegations contained in Paragraph 5 of the Complaint.

JURISDICTION AND VENUE

6. Medela admits that the Complaint purports to allege claims for patent infringement pursuant to 35 U.S.C. § 271 *et seq.*

7. Medela admits that this Court has subject matter jurisdiction over the allegations contained in the Complaint.

8. Medela AG is not a named Defendant in this action. Medela LLC does not dispute that it is subject to the Court's personal jurisdiction.

9. Medela admits that Medela LLC is located, does business, has a regular and established place of business, and has employees conducting business in this judicial district.

Medela specifically denies that it has committed any acts of infringement, in this district or elsewhere.

BACKGROUND AND GENERAL ALLEGATIONS

10. Medela lacks knowledge or information sufficient to form a belief as to the truth of the allegations contained in Paragraph 10 of the Complaint and, therefore, denies them.

11. Medela LLC admits that it sells the Medela Invia NPWT Systems, including the Invia Liberty Negative Pressure Wound Therapy (NPWT) System, the Invia Motion NPWT system, the Invia NPWT dressings and kits, the Invia Integrated dressing, and the FitPad. Medela denies the remaining allegations contained in Paragraph 11, and specifically denies that the accused products infringe the Asserted Patents.

12. Medela admits that it does not have a license to use the ’554 Patent. Medela further responds that, based on the face of the ’554 Patent, it appears to be entitled “Wound closure and drainage system” and was issued by the USPTO. Medela denies that the ’554 Patent is valid and enforceable. Medela lacks knowledge or information sufficient to form a belief as to the truth of the remaining allegations in Paragraph 12 of the Complaint and, therefore, denies them.

13. Medela admits that it does not have a license to use the ’534 Patent. Medela further responds that, based on the face of the ’534 Patent, it appears to be entitled “Wound closure and drainage system” and was issued by the USPTO. Medela denies that the ’534 Patent is valid and enforceable. Medela lacks knowledge or information sufficient to form a belief as to the truth of the remaining allegations in Paragraph 13 of the Complaint and, therefore, denies them.

14. Paragraph 14 does not contain factual allegations to which a response is required. To the extent a response is deemed necessary, Medela lacks knowledge or information sufficient

to form a belief as to the truth of the allegations in Paragraph 14 of the Complaint and, therefore, denies them.

15. Paragraph 15 contains legal conclusions to which no response is required. To the extent a response is deemed necessary, Medela lacks knowledge or information sufficient to form a belief as to the truth of the allegations in Paragraph 15 of the Complaint and, therefore, denies them.

THE PATENTS

16. Medela admits that the ’534 Patent recites “a vacuum system for applying negative pressure to a wound” and a “method for applying negative pressure to a wound.” Medela further admits that the ’534 Patent contains 22 claims and that Paragraph 16 of the Complaint accurately reproduces claim 1 of the ’534 Patent. Medela lacks knowledge or information sufficient to form a belief as to the truth of the remaining allegations in Paragraph 16 of the Complaint and, therefore, denies them.

17. Medela admits that the ’554 Patent[1] recites “an enclosure for applying negative pressure to a wound,” “a disposable assembly for applying negative to a wound”, and “a vacuum system for applying negative pressure to a wound.” Medela further admits that the ’554 Patent contains 29 claims, and that Paragraph 17 of the Complaint accurately reproduces claim one of the ’554 Patent, as corrected. Medela lacks knowledge or information sufficient to form a belief as to the truth of the remaining allegations in Paragraph 17 of the Complaint and, therefore, denies them.

[1] The first sentence of Paragraph 17 of the Complaint refers to “the ’088 patent”. Medela believes this to be in error and responds regarding the ’554 Patent. To the extent the reference to the ’088 patent was not an error, Medela lacks knowledge or information sufficient to form a belief as to the allegations pertaining to the ’088 patent and, therefore, denies them.

INFRINGEMENT

18. Medela admits that it sells NPWT systems, including the Invia NPWT systems and components. Medela denies the remaining allegations contained in Paragraph 18 of the Complaint.

19. Paragraph 19 contains legal conclusions to which no response is required. To the extent a response is deemed necessary, Medela denies those allegations. Medela denies all remaining allegations contained in Paragraph 19 of the Complaint.

20. Paragraph 20 contains legal conclusions to which no response is required. To the extent a response is deemed necessary, Medela denies those allegations. Medela denies all remaining allegations contained in Paragraph 20 of the Complaint.

21. Medela denies the allegations contained in Paragraph 21 of the Complaint and specifically denies that Plaintiff has conducted a "detailed analysis" of the accused products. Medela further responds that Plaintiff's factual allegations concerning Medela's alleged infringement, both in the Complaint and attached claim charts, are facially deficient and do not put Medela on notice of the alleged infringement.

22. Medela denies that the claim charts attached to the Complaint demonstrates "the correspondence of the operation of the accused products with elements of exemplary claims of the '554 and '534 patents." Medela also specifically denies that the accused products infringe the Asserted Patents.

23. Medela denies the allegations contained in Paragraph 23 of the Complaint.

24. Paragraph 24 contains legal conclusions to which no response is required. To the extent a response is deemed necessary, Medela denies those allegations. Medela denies all remaining allegations contained in Paragraph 24 of the Complaint.

25. Medela lacks knowledge or information sufficient to form a belief as to the truth of the allegations contained in Paragraph 25 of the Complaint and, therefore, denies them.

26. Medela admits that it continues to sell the accused products. Paragraph 26 contains legal conclusions to which no response is required. To the extent a response is deemed necessary, Medela denies those allegations. Medela denies all remaining allegations contained in Paragraph 26 of the Complaint.

27. Paragraph 27 contains legal conclusions to which no response is required. To the extent a response is deemed necessary, Medela denies those allegations. Medela denies the remaining allegations contained in Paragraph 27 of the Complaint.

28. Paragraph 28 contains legal conclusions to which no response is required. To the extent a response is deemed necessary, Medela denies those allegations. Medela denies the remaining allegations contained in Paragraph 28 of the Complaint.

29. Paragraph 29 contains legal conclusions to which no response is required. To the extent a response is deemed necessary, Medela denies those allegations. Medela denies the remaining allegations contained in Paragraph 29 of the Complaint.

30. Paragraph 30 contains legal conclusions to which no response is required. To the extent a response is deemed necessary, Medela denies those allegations. Medela denies the remaining allegations contained in Paragraph 30 of the Complaint.

31. Paragraph 31 contains legal conclusions to which no response is required. To the extent a response is deemed necessary, Medela denies those allegations. Medela denies all remaining allegations contained in Paragraph 31 of the Complaint.

32. Paragraph 32 contains legal conclusions to which no response is required. To the extent a response is deemed necessary, Medela denies those allegations. Medela denies all remaining allegations contained in Paragraph 32 of the Complaint.

33. Paragraph 33 contains legal conclusions to which no response is required. To the extent a response is deemed necessary, Medela denies those allegations. Medela denies all remaining allegations contained in Paragraph 33 of the Complaint.

34. Paragraph 34 contains legal conclusions to which no response is required. To the extent a response is deemed necessary, Medela denies those allegations. Medela denies all remaining allegations contained in Paragraph 34 of the Complaint.

35. Medela admits that it does not have a license to use the Asserted Patents.

36. Paragraph 36 contains legal conclusions to which no response is required. To the extent a response is deemed necessary, Medela denies those allegations. Medela denies the remaining allegations contained in Paragraph 36 of the Complaint.

37. Paragraph 37 contains legal conclusions to which no response is required. To the extent a response is deemed necessary, Medela denies those allegations. Medela denies the remaining allegations contained in Paragraph 37 of the Complaint.

COUNT I
MEDELA LLC
INFRINGEMENT OF U.S. PATENT NO. 8,506,554

38. Medela repeats its responses to each of the foregoing paragraphs and incorporates them herein by reference.

39. Paragraph 39 contains legal conclusions to which no response is required. To the extent a response is deemed necessary, Medela denies those allegations. Medela denies all remaining allegations contained in Paragraph 39 of Count I of the Complaint.

41[sic][2]. Paragraph 41 contains legal conclusions to which no response is required. To the extent a response is deemed necessary, Medela denies those allegations. Medela denies all remaining allegations contained in Paragraph 41 of Count I of the Complaint.

39. Medela admits that it does not have a license to use the ’554 Patent.

40. Medela denies the allegations contained in Paragraph 40 of Count I of the Complaint.

COUNT II
MEDELA LLC
INFRINGEMENT OF U.S. PATENT NO. 8,858,534

41. Medela repeats its responses to each of the foregoing paragraphs and incorporates them herein by reference.

39. Paragraph 39 contains legal conclusions to which no response is required. To the extent a response is deemed necessary, Medela denies those allegations. Medela denies all remaining allegations contained in Paragraph 39 of Count II of the Complaint.

40. Paragraph 40 contains legal conclusions to which no response is required. To the extent a response is deemed necessary, Medela denies those allegations. Medela denies all remaining allegations contained in Paragraph 40 of Count II of the Complaint.

41. Paragraph 41 contains legal conclusions to which no response is required. To the extent a response is deemed necessary, Medela denies those allegations. Medela denies all remaining allegations contained in Paragraph 41 of Count II of the Complaint.

39. Medela admits that it does not have a license to use the ’534 Patent.

[2] The paragraph numbering throughout the remainder of the Complaint is incorrect. Medela will, however, use the same numbering as it appears in Plaintiff’s Complaint for convenience.

40. Medela denies the allegations contained in Paragraph 40 of Count II of the Complaint.

COUNT III
MEDELA AG[3]
INFRINGEMENT OF U.S. PATENT NO. 8,506,554

48. Medela repeats its responses to each of the foregoing paragraphs and incorporates them herein by reference.

39. Medela AG is not a named Defendant in this action. To the extent these allegations were meant to refer to one or both named Defendants, Medela responds that Paragraph 39 contains legal conclusions to which no response is required. To the extent a response is deemed necessary, Medela denies those allegations. Medela denies all remaining allegations contained in Paragraph 39 of Count III of the Complaint.

41. Medela AG is not a named Defendant in this action. To the extent these allegations were meant to refer to one or both named Defendants, Medela responds that Paragraph 41 contains legal conclusions to which no response is required. To the extent a response is deemed necessary, Medela denies those allegations. Medela denies all remaining allegations contained in Paragraph 41 of Count III of the Complaint.

39. Medela AG is not a named Defendant in this action. To the extent these allegations were meant to refer to one or both named Defendants, Medela admits that Medela does not have a license to use the ’554 Patent.

40. Medela AG is not a named Defendant in this action. To the extent these allegations were meant to refer to one or both named Defendants, Medela denies the allegations contained in Paragraph 40 of Count III of the Complaint.

[3] Medela AG is not a named Defendant in this action.

COUNT IV
MEDELA AG[4]
INFRINGEMENT OF U.S. PATENT NO. 8,858,534

55. Medela repeats its responses to each of the foregoing paragraphs and incorporates them herein by reference.

39. Medela AG is not a named Defendant in this action. To the extent these allegations were meant to refer to one or both named Defendants, Medela responds that Paragraph 39 contains legal conclusions to which no response is required. To the extent a response is deemed necessary, Medela denies those allegations. Medela denies all remaining allegations contained in Paragraph 39 of Count IV of the Complaint.

40. Medela AG is not a named Defendant in this action. To the extent these allegations were meant to refer to one or both named Defendants, Medela responds that Paragraph 40 contains legal conclusions to which no response is required. To the extent a response is deemed necessary, Medela denies those allegations. Medela denies all remaining allegations contained in Paragraph 40 of Count IV of the Complaint.

41. Medela AG is not a named Defendant in this action. To the extent these allegations were meant to refer to one or both named Defendants, Medela responds that Paragraph 41 contains legal conclusions to which no response is required. To the extent a response is deemed necessary, Medela denies those allegations. Medela denies all remaining allegations contained in Paragraph 41 of Count IV of the Complaint.

39. Medela AG is not a named Defendant in this action. To the extent these allegations were meant to refer to one or both named Defendants, Medela admits that it does not have a license to use the ’534 Patent.

[4] Medela AG is not a named Defendant in this action.

40. Medela AG is not a named Defendant in this action. To the extent these allegations were meant to refer to one or both named Defendants, Medela denies the allegations contained in Paragraph 40 of Count IV of the Complaint.

PRAYER FOR RELIEF

Plaintiff's Prayer for Relief does not include factual allegations to which a response is required. To the extent a response is deemed necessary, Medela denies the allegations contained within Paragraphs A through P of the Prayer for Relief in the Complaint and specifically denies that Plaintiff is entitled to any relief in this action. Medela asks the Court to deny any and all of the relief requested by Plaintiff in its Complaint.

ADDITIONAL DEFENSES

Pursuant to Federal Rule of Civil Procedure 8(c), and without altering any applicable burdens of proof, Medela asserts the following additional defenses as set forth below. Medela reserves the right to later assert any other defenses that it identifies through discovery and/or further investigation as the case progresses.

FIRST DEFENSE: FAILURE TO STATE A CLAIM

Plaintiff's Complaint, including the attached claim charts, fail to state a claim upon which relief can be granted.

SECOND DEFENSE: NON-INFRINGEMENT

Medela has not infringed and does not currently infringe any claim of the asserted '554 or '534 Patents, literally or under the doctrine of equivalents, directly, indirectly, contributorily, or by inducement.

THIRD DEFENSE: INVALIDITY

The claims of the ’554 patent and ’534 Patent are invalid pursuant to 35 U.S.C. §§ 102, 103, and 112.

FOURTH DEFENSE: UNENFORCEABILITY

The claims of the ’554 Patent and ’534 Patent are unenforceable due to prosecution laches and/or inequitable conduct.

FIFTH DEFENSE: PROSECUTION HISTORY ESTOPPEL AND DISCLAIMER

Plaintiff’s claims for relief are barred by prosecution history estoppel and disclaimer arising from the actions, representations, and conduct of the applicants for the ’554 and ’534 Patents before the Patent and Trademark Office during prosecution of those patents as well as actions, representations, and conduct of the applicants in connection with related patents and patent applications before the U.S. Patent and Trademark Office and foreign patent offices.

SIXTH DEFENSE: FAILURE TO MARK

Upon information and belief, Plaintiff’s claims for relief are limited under 35 U.S.C. § 287 due to failure to mark.

SEVENTH DEFENSE: NO RIGHT TO INJUNCTION

Plaintiff is not entitled to injunctive relief. Any alleged injury to Plaintiff is neither immediate nor irreparable. Plaintiff delayed in filing this action and serving its Complaint on Medela. Moreover, Plaintiff does not offer a competing product that is being harmed by Medela’s alleged infringement. Plaintiff has an adequate remedy at law for any claims it can prove, the balance of the hardships does not warrant injunctive relief, and the public interest would not be served by an injunction.

EIGHTH DEFENSE: NO WILLFULNESS

Plaintiff is barred from obtaining a finding of willfulness or receiving enhanced damages because it has failed to allege, and Medela did not have, any pre-suit knowledge of the Asserted Patents. Moreover, Plaintiff has failed to allege reprehensible culpability on the part of Medela.

MEDELA'S COUNTERCLAIMS

Counter-Plaintiff Medela LLC ("Medela" or "Counterclaim-Plaintiff") asserts the following counterclaims against Plaintiff M.E.A.C. Engineering LTD ("MEAC" or "Counterclaim-Defendant"): (1) a Declaration of Non-Infringement of U.S. Patent No. 8,506,554 (the "'554 Patent"); (2) a Declaration of Non-Infringement of U.S. Patent No. 8,858,534 (the "'534 Patent"); (3) a Declaration of Invalidity of the '554 Patent; and (4) a Declaration of Invalidity of the '534 Patent (collectively, the "Counterclaims").

PARTIES

1. Medela LLC is a Delaware limited liability company with its principal place of business located at 1101 Corporate Drive, McHenry, IL 60050.

2. Counterclaim-Defendant MEAC is an Israeli corporation with its principal place of business located at 2 Aba Hilel St., Apt. 5808, Ramat Gan 5250601, Israel.

JURISDICTION AND VENUE

3. This Court has jurisdiction over the subject matter of these Counterclaims under 28 U.S.C. §§ 1331 and 1338.

4. On information and belief, this Court has personal jurisdiction over Counterclaim-Defendant because, among other reasons, Counterclaim-Defendant has submitted to this Court's personal jurisdiction over it by filing its Complaint in this judicial district.

5. On information and belief, venue is proper in this judicial district because, by filing its Complaint, Counterclaim-Defendant has consented to this Court as a proper venue for this litigation.

FIRST CAUSE OF ACTION
(Non-Infringement of the ’554 Patent)

6. Medela incorporates its allegations in Counterclaim Paragraphs 1 through 5, inclusive, as if full set forth herein.

7. MEAC claims to be the owner of the ’554 Patent.

8. MEAC has accused Medela of infringing the ’554 Patent. MEAC has therefore created a substantial, immediate, and real controversy between the parties as to the infringement of the ’554 Patent.

9. Medela has not infringed and currently does not infringe any asserted claim of the ’554 Patent directly, indirectly, contributorily, by inducement, or in any other manner.

10. For example, Medela’s Invia NPWT Systems do not have a “venting arrangement located outside said enclosure and comprising a flow restrictor to restrict flow through said venting arrangement such that ambient air can enter said tube via said venting arrangement and flow to said vacuum source without having to enter said enclosure” as required by independent claim 1 of the ’554 Patent[5]. Medela’s Invia NPWT Systems allow ambient air to enter the enclosure and flow over the wound. Medela expects to identify and disclose additional bases for non-infringement after receiving MEAC’s infringement contentions and throughout discovery.

11. MEAC is not entitled to any relief as Medela does not infringe the ’554 Patent.

[5] The remaining independent claims 12 and 18 include nearly identical language.

SECOND CAUSE OF ACTION
(Non-Infringement of the ’534 Patent)

12. Medela incorporates its allegations in Counterclaim Paragraphs 1 through 11, inclusive, as if full set forth herein.

13. MEAC claims to be the owner of the ’534 Patent.

14. MEAC has accused Medela of infringement of the ’534 Patent. MEAC has therefore created a substantial, immediate, and real controversy between the parties as to the infringement of the ’534 Patent.

15. Medela has not infringed and currently does not infringe any asserted claim of the ’534 Patent directly, indirectly, contributorily, by inducement, or in any other manner.

16. For example, Medela’s Invia NPWT Systems do not have a “venting arrangement located outside said enclosure and comprising a flow restrictor to restrict flow through said venting arrangement and to thereby provide a controlled flow of ambient air entering said tube via said venting arrangement without entering said enclosure” as required by independent claim 11 of the ’534 Patent. Medela’s Invia NPWT Systems allow ambient air to enter the enclosure and flow over the wound.

17. As another example, Medela’s Invia NPWT Systems do not have a “venting arrangement comprising a flow restrictor to restrict flow through said venting arrangement and to thereby provide a controlled flow of ambient air into said vacuum system upstream of the vacuum source” as required by independent claims 1 and 18. Medela expects to identify and disclose additional bases for non-infringement after receiving MEAC’s infringement contentions and throughout discovery.

18. MEAC is not entitled to any relief as Medela does not infringe the ’534 Patent.

THIRD CAUSE OF ACTION
(Invalidity of the ’554 Patent)

20. Medela incorporates its allegations in Counterclaim Paragraphs 1 through 19, inclusive, as if full set forth herein.

21. MEAC contends that the ’554 Patent is valid and enforceable. MEAC has therefore created a substantial, immediate, and real controversy between the parties as to the invalidity of the asserted claims of the ’554 Patent.

22. Each asserted claimed of the ’554 Patent is invalid for failure to comply with one or more provisions of 35 U.S.C. §§ 102, 103, and/or 112.

23. Prior art systems and publications predate the ’554 Patent. For example, U.S. Patent No. 6,764,462 (the “’462 Patent”), entitled “Wound Treatment Apparatus,” is prior art to the ’554 Patent. The application for the ’462 Patent was filed on May 31, 2002. The ’462 Patent is prior art to the ’554 Patent because it is a patent publication that describes the same invention as is claimed by the ’554 Patent before the effective date of the ’554 Patent.

24. As another example, U.S. Patent No. 1,889,425 (the “’425 Patent”), entitled “Medical Douche,” is prior art to the ’554 Patent. The ’425 Patent issued on November 29, 1932 and is prior art to the ’554 Patent because it is a patent publication that describes a related medical invention as is claimed by the ’554 Patent before the effective date of the ’554 Patent.

25. As another example, U.S. Patent No. 7,955,318 (the “’318 Patent”), entitled “Multipurpose Large Bore Medical Suction Systems,” is prior art to the ’554 Patent. The application for the ’318 Patent was filed on July 11, 2005 and the ’318 Patent claims priority to a provisional application No. 60/588,717 that was filed on July 16, 2004. The ’318 Patent is prior art to the ’554 Patent because it is a patent publication that describes the same invention as is claimed by the ’554 Patent before the effective date of the ’554 Patent.

26. Pursuant to 35 U.S.C. § 103 (pre-AIA), the asserted claims of the ’554 Patent are invalid because prior art renders each and every claim of the ’554 Patent invalid. For example, the ’554 Patent is rendered obvious by the ’462 Patent in view of either the ’425 Patent or ’318 Patent. The ’462 Patent, ’425 Patent, and ’318 Patent are attached hereto as **Exhibit A, Exhibit B, and Exhibit C**, respectively.

27. Claim 1 of the ’554 Patent recites:

> An enclosure for applying negative pressure to a wound,
>
> the enclosure being attachable to the wound circumference so as to define a confined volume,
>
> and comprising a tube and a venting arrangement,
>
> the enclosure having an enclosure outlet connectable to a vacuum source via said tube so that negative pressure can be selectively created in said volume,
>
> said venting arrangement located outside said enclosure and comprising a flow restrictor to restrict flow through said venting arrangement such that ambient air can enter said tube via said venting arrangement and flow to said vacuum source without having to enter said enclosure.

28. The ’462 Patent in combination with the ’425 Patent or the ’318 Patent disclose claim 1 of the ’554 Patent, which is discussed below. In showing the ’462, ’425, and ’318 Patents’ disclosure of each element of claim 1 below, Medela relies on its understanding of MEAC’s interpretation of claim 1 of the ’554 Patent based on MEAC’s allegations in the Complaint.

29. The ’462 Patent discloses “[a]n enclosure for applying negative pressure to a wound.” For example, the ’462 Patent describes “[a] wound treatment apparatus” that “provide[s] vacuum therapy to a wound associated with a patient.” (Ex. A, Abstract). The ’462 Patent further discloses a “bandage 14” attached to a patient. (*Id.*, 4:30-32). Additionally, as shown below, Figure 9 of the ’462 Patent depicts the bandage 14 placed on a wound and used to apply negative pressure:

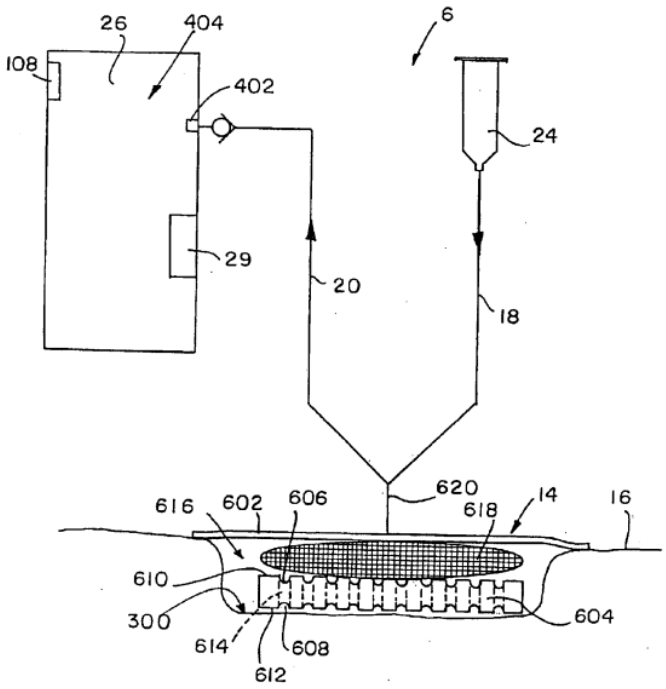

FIG. 9

30. The '462 Patent discloses "the enclosure being attachable to the wound circumference so as to define a confined volume." For example, the '462 Patent teaches "Bandage 14 comprises a cover film 602, illustratively a flexible cover, that seals wound 300 about its outer perimeter." (Ex. A, 11:14-16). Figure 9 of the '462 Patent shows the wound cover being attachable to the wound and defining a confined volume:

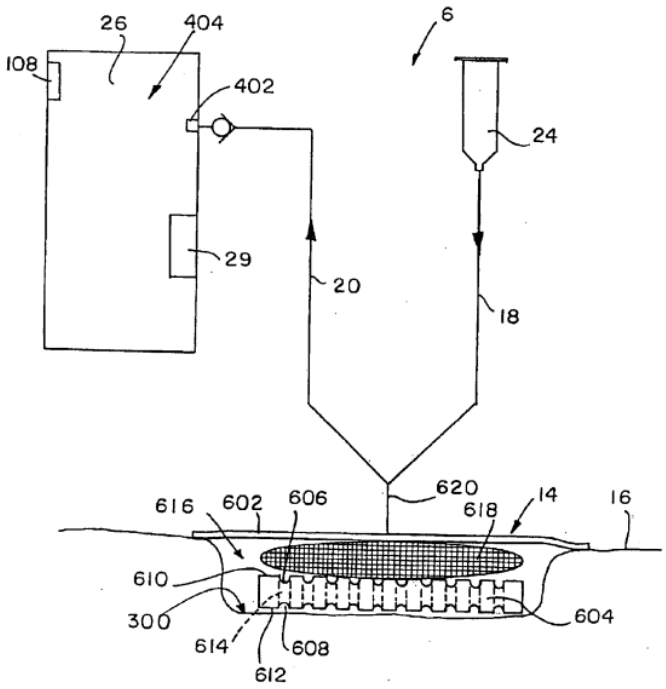

FIG. 9

31. The ’462 Patent discloses “and comprising a tube and a venting arrangement.” The ’462 Patent describes both a tube (i.e., “evacuating tube . . . 20” (Ex. A, 4:33)) and a venting arrangement (i.e., “a port 136, coupled to regulator 134, opens so that pump 110 can draw more air to maintain a sufficient flow through pump 110.” (Ex. A, 8:2-4)). The tube 20 and port 136 are depicted in Figure 5 of the ’462 Patent as shown below:

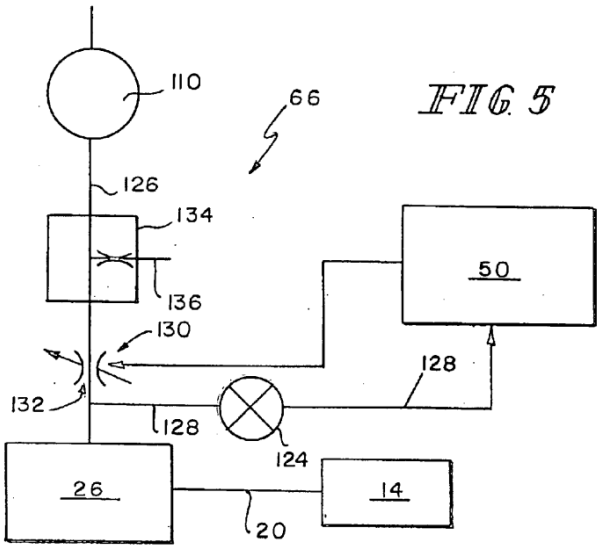

32. The ’462 Patent discloses “the enclosure having an enclosure outlet connectable to a vacuum source via said tube so that negative pressure can be selectively created in said volume.” For example, the ’462 Patent teaches: “a wound treatment apparatus is adapted for use with the vacuum wound bandage associated with the wound of the patient to provide negative pressure through the vacuum wound bandage to the wound.” (Ex. A, 1:44-48). Moreover, “[d]ispensing and evacuating tubes 18, 20 are coupled to both bandage 14 and system 6.” (Ex. A, 4:32-34). Figure 1 depicts how the wound enclosure is connectable to the vacuum source, as shown below:

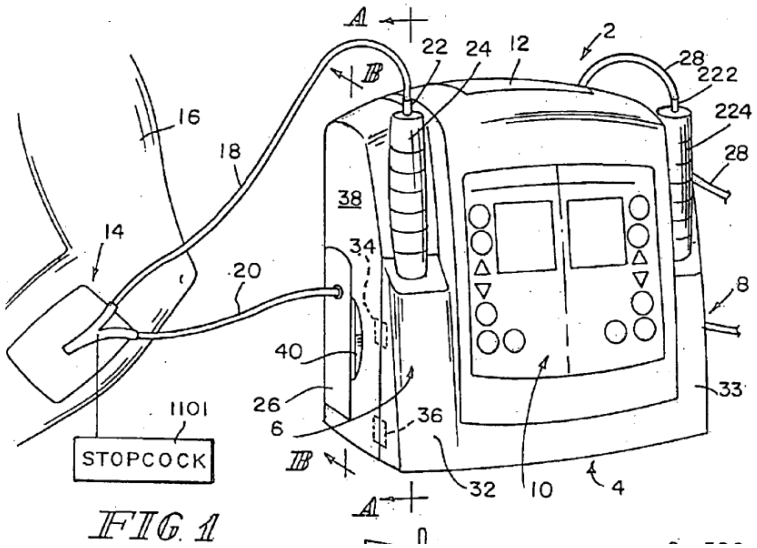

33. The ’462 Patent in combination with the ’425 Patent discloses “said venting arrangement located outside said enclosure and comprising a flow restrictor to restrict flow through said venting arrangement such that ambient air can enter said tube via said venting arrangement and flow to said vacuum source without having to enter said enclosure.” For example, the ’462 Patent teaches a venting arrangement (i.e., port 136) that is located outside of the enclosure and comprises a flow restrictor (i.e., air filter 137) that restricts flow of ambient air through the venting arrangement. (Ex. A, 8:2-12). Ambient air passed through the port 136 and air filter 137 flows to the vacuum system without entering the bandaged enclosure. (Ex. A, 8:2-12). The ’425 Patent discloses a venting arrangement in the form of a hole on the suction tube (“opening 7”), on the tube itself, which is used to “draw air through the valve” and into the suction tube (Ex. B, 1:91-100). Figures 1 and 3 of the ’425 Patent portray the venting arrangement (opening 7) at the end of the suction tube 9:

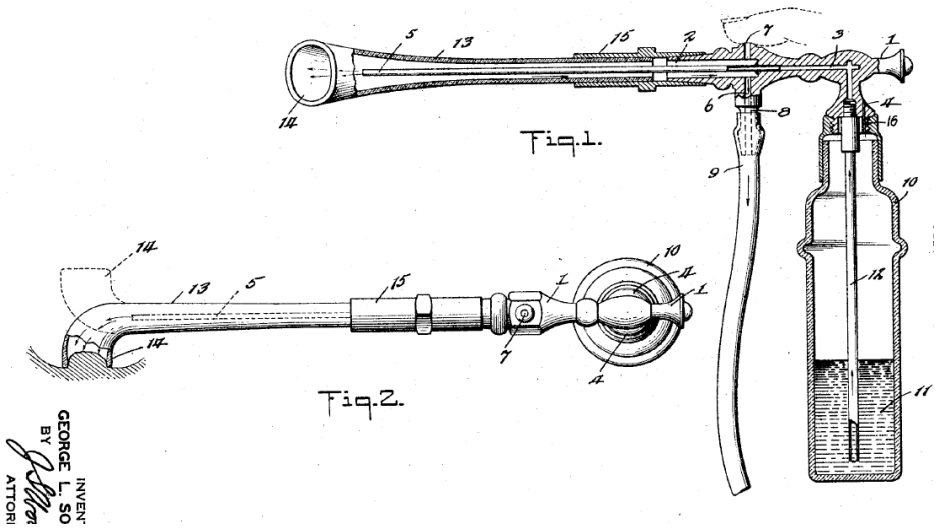

34. Alternatively, the ’462 Patent could be combined with the ’318 Patent which also discloses a venting arrangement that draws ambient air into the suction tube without entering the enclosure. The ’318 Patent discloses “aperture valve 360” which is “adapted to allow manual flow regulation of suction pressure” and is located at the end of the suction tube. (Ex. C, 18:23-24). “During operation, aperture valve 260 acts as a pressure-relieving bypass to reduce the level of vacuum pressure within large-bore inner passageway 302.” (Ex. C, 19:3-5). Figure 13 depicts aperture valve 360 located at the end of the tube:

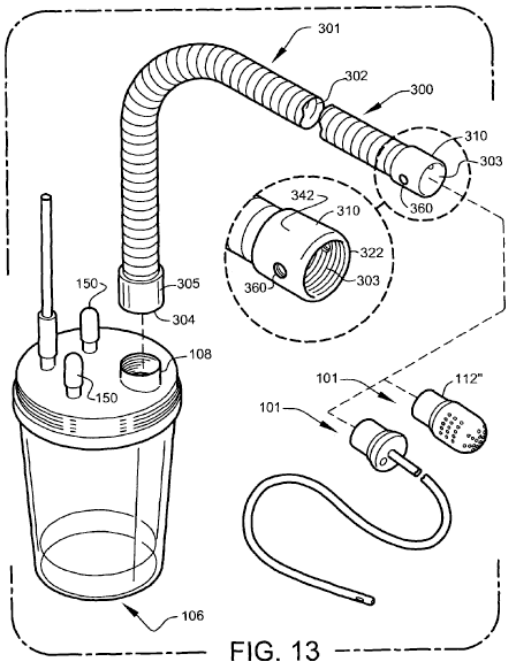

FIG. 13

35. A person of ordinary skill in the art would have been motivated to combine the ’462 Patent with either the ’425 or ’318 Patents. All three patents are within the same field disclosing medical suction devices. As evidenced by the ’425 Patent, including a venting hole on the suction tube was well-known in the art since the 1930s “to control . . . the suction” of the device. (Ex. B, 1:11-12). As was known in the art at the time of invention, controlling the suction of a negative pressure wound therapy device is particularly important to “close[] wounds without stressing the surrounding skin” and “facilitate un-clogging . . . in the event of a blockage.” (U.S. Patent No. 6,695,823 (issued February 24, 2004) (the “’823 Patent”) (attached hereto as **Exhibit D**), 2:39-40, 13:1-9). As such, a person of ordinary skill in the art would have found it obvious, and been motivated, to place the venting arrangement (port 136) and flow restrictor (air filter 137) of the ’462 Patent on the suction tube to allow ambient air to flow into the suction tube, controlling the negative pressure applied to the wound and breaking up any blockages of removed exudate within the tube. This would have been a simple substitution of one known element for another as well as

obvious to try based on known teachings within the prior art as evidenced by the ’425, ’318, and ’823 Patents. (Exs. B-D).

36. In addition to these and other prior art patents, on information and belief, prior art systems predate the ’554 Patent. For example, Kinetic Concepts, Inc. manufactured and sold vacuum-assisted enclosure systems for wound treatments prior to the ’554 Patent. Kinetic Concepts, Inc.’s V.A.C. ATS system was publicly available in 2003. *See* V.A.C. ATS User Manual (Aug. 12, 2003), *available at* content (ewh.org).

37. The ’554 Patent is also invalid as indefinite under 35 U.S.C. § 112(f) as improperly reciting a means-plus-function limitation regarding the claim element “comprising a flow restrictor to restrict flow.” (’554 Patent, cls. 1, 12, and 18). The specification does not provide any basis for which a person of ordinary skill in the art would understand the meaning of a “flow restrictor to restrict flow”.

38. Medela will identify and disclose additional bases for invalidity in its invalidity contentions.

39. MEAC is entitled to no relief as the ’554 Patent is invalid.

FOURTH CAUSE OF ACTION
(Invalidity of the ’534 Patent)

40. Medela incorporates its allegations in Counterclaim Paragraphs 1 through 39, inclusive, as if full set forth herein.

41. MEAC contends that the ’534 Patent is valid and enforceable. MEAC has therefore created a substantial, immediate, and real controversy between the parties as to the invalidity of the asserted claims of the ’534 Patent.

42. Each asserted claimed of the ’534 Patent is invalid for failure to comply with one or more provisions of 35 U.S.C. §§ 102, 103, and/or 112.

43. Prior art systems and publications predate the ’534 Patent. For example, the ’462 Patent is prior art to the ’534 Patent because it is a patent publication that describes the same invention as is claimed in the ’534 Patent before the effective date of the ’534 Patent.

44. Pursuant to 35 U.S.C. §§ 102 and 103 (pre-AIA), the asserted claims of the ’534 Patent are invalid because prior art, including for example the ’462 Patent, renders each and every claim of the ’534 Patent invalid.

45. Claim 1 of the ’534 Patent recites:

> A vacuum system for applying negative pressure to a wound, the vacuum system comprising:
>
> an enclosure, a venting arrangement, a tube, a vacuum source, and a controller:
>
> the enclosure being attachable to a periphery of the wound so as to define a confined volume,
>
> the enclosure having an enclosure outlet connectable to said vacuum source via said tube so that negative pressure can be selectively created in said volume;
>
> the venting arrangement comprising a flow restrictor to restrict flow through said venting arrangement and to thereby provide a controlled flow of ambient air into said vacuum system upstream of the vacuum source;
>
> the controller configured for controlling operation of the vacuum source while providing venting of the vacuum system via said venting arrangement to provide a desired level of said negative pressure in said confined volume.

46. The ’462 Patent’s disclosure of claim 1 of the ’534 Patent is discussed below. In showing the ’462 Patent’s disclosure of each element of claim 1 below, Medela relies on its understanding of MEAC’s interpretation of claim 1 of the ’534 Patent based on MEAC’s allegations in the Complaint.

47. The ’462 Patent discloses “[a] vacuum system for applying negative pressure to a wound.” For example, the ’462 Patent describes “[a] wound treatment apparatus” that “provide[s] vacuum therapy to a wound associated with a patient.” (Ex. A, Abstract). The ’462 Patent further

discloses a "[v]acuum pump 110 creates the negative pressure" within the system. (*Id.*, 7:30-31). Additionally, as shown below, Figure 1 of the '462 Patent depicts the vacuum system used to apply negative pressure to a wound:

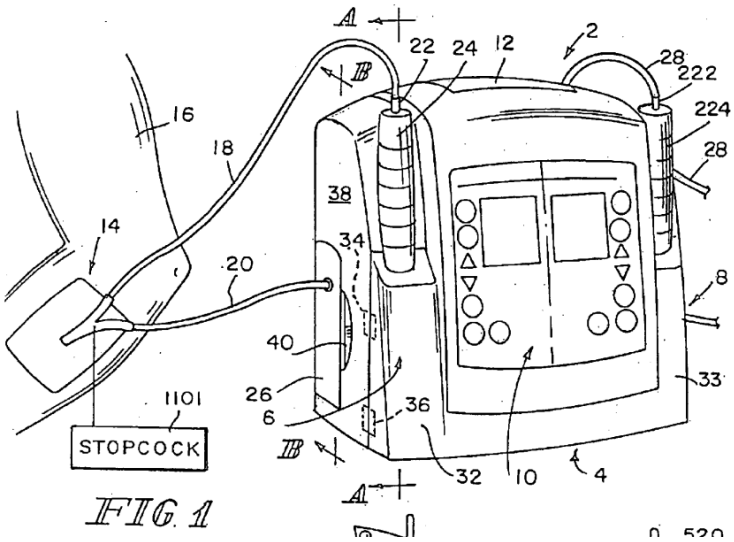

48. The '462 Patent discloses "an enclosure, a venting arrangement, a tube, a vacuum source, and a controller." For example, the '462 Patent teaches an enclosure in the form of "bandage 14" which is attached to a patient's wound. (Ex. A, 4:30-32). The '462 Patent further discloses a venting arrangement: "a port 136, coupled to regulator 134, opens so that pump 110 can draw more air to maintain a sufficient flow through pump 110." (Ex. A, 8:2-4). The '462 Patent discloses a tube: "evacuating tube . . . 20". (Ex. A, 4:33). The '462 Patent also discloses a vacuum source: "Vacuum pump 110 creates the negative pressure." (Ex. A, 7:30-31). Lastly, the '462 Patent discloses a controller: "A controller 50 is provide in housing 4 and is an electronic control unit that controls apparatus 2." (Ex. A, 5:22-23). Figure 1 of the '462 Patent depicts these elements, as shown below:

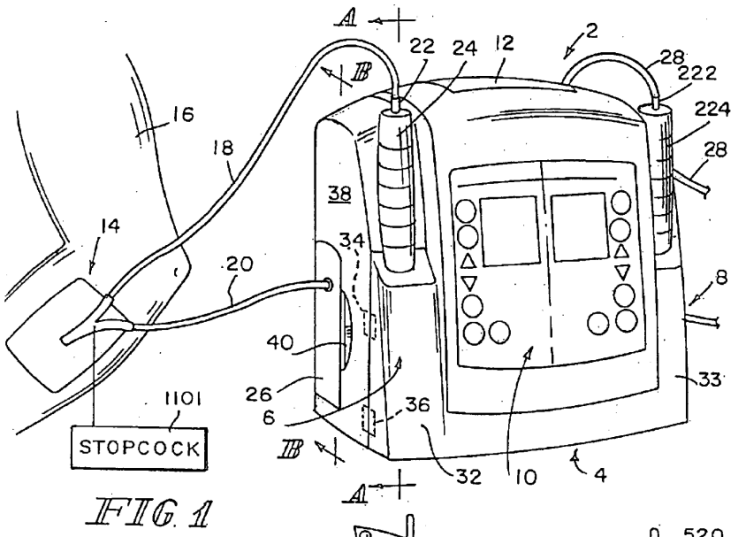

FIG. 1

49. The '462 Patent discloses "the enclosure being attachable to a periphery of the wound so as to define a confined volume." For example, the '462 Patent teaches "Bandage 14 comprises a cover film 602, illustratively a flexible cover, that seals wound 300 about its outer perimeter." (Ex. A, 11:14-16). Figure 9 of the '462 Patent shows the wound cover being attachable to the wound and defining a confined volume:

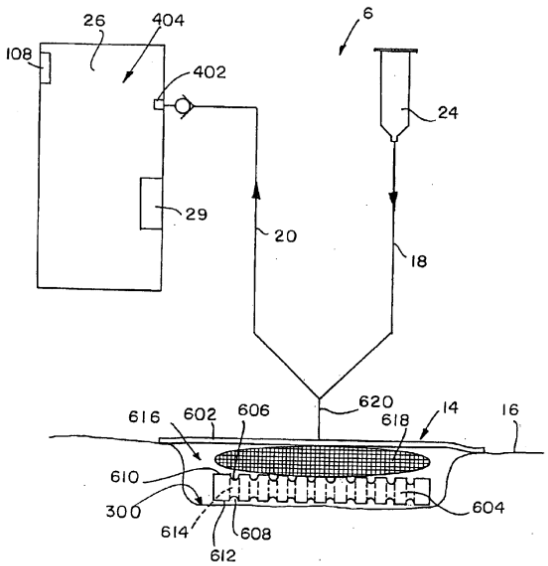

FIG. 9

50. The ’462 Patent discloses “the enclosure having an enclosure outlet connectable to said vacuum source via said tube so that negative pressure can be selectively created in said volume.” For example, the ’462 Patent teaches: “a wound treatment apparatus is adapted for use with the vacuum wound bandage associated with the wound of the patient to provide negative pressure through the vacuum wound bandage to the wound.” (Ex. A, 1:44-48). Moreover, “[d]ispensing and evacuating tubes 18, 20 are coupled to both bandage 14 and system 6.” (Ex. A, 4:32-34). Figure 1 depicts how the wound enclosure is connectable to the vacuum source, as shown below:

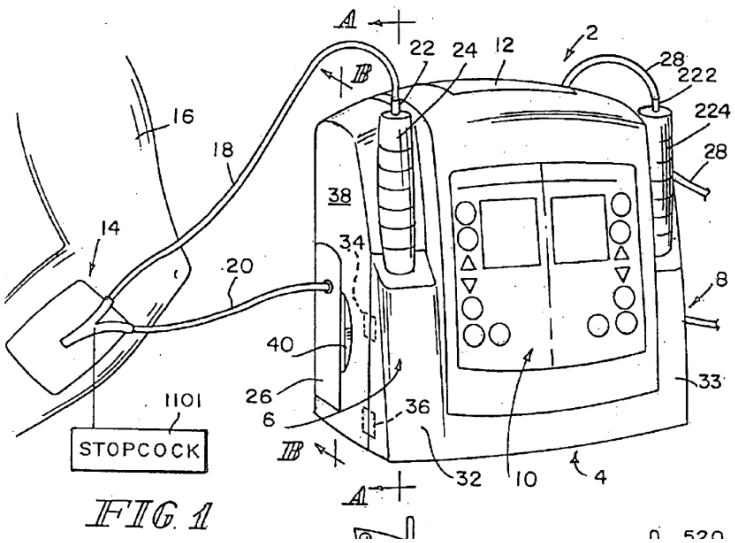

FIG. 1

51. The ’462 Patent discloses “the venting arrangement comprising a flow restrictor to restrict flow through said venting arrangement and to thereby provide a controlled flow of ambient air into said vacuum system upstream of the vacuum source.” For example, the ’462 Patent teaches a venting arrangement (i.e., port 136) that is located outside of the enclosure and comprises a flow restrictor (i.e., air filter 137) that restricts flow of ambient air through the venting arrangement. (Ex. A, 8:2-12). Ambient air passed through the port 136 and air filter 137 flows to the vacuum system which is upstream of the vacuum source (i.e., vacuum pump 110), as shown in Figures 2 and 5 below:

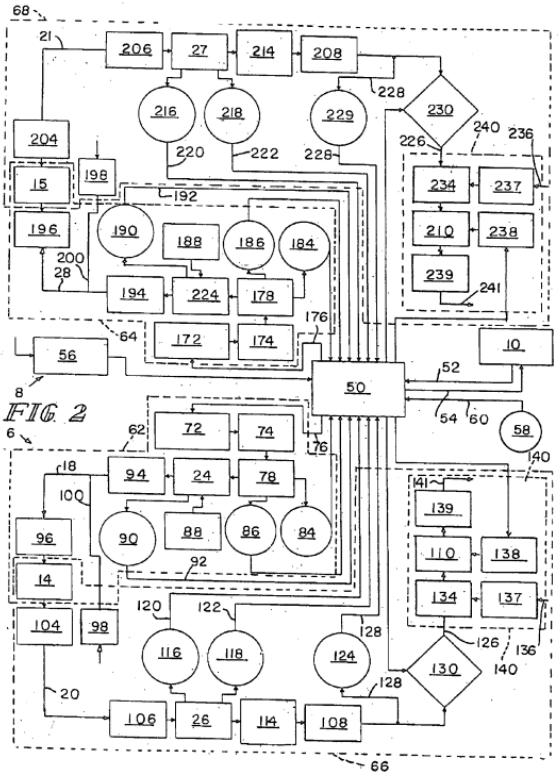

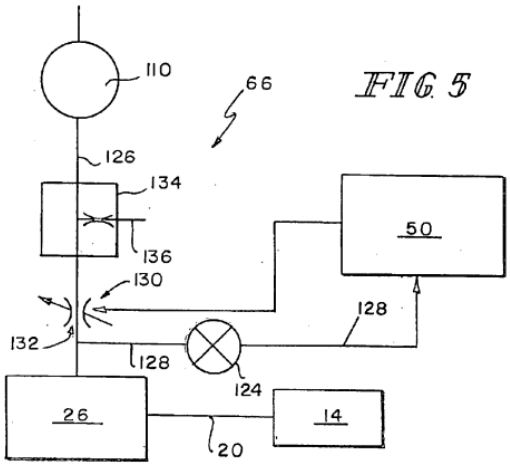

52. The ’462 Patent discloses “the controller configured for controlling operation of the vacuum source while providing venting of the vacuum system via said venting arrangement to provide a desired level of said negative pressure in said confined volume.” For example, the ’462 Patent describes how “controller 50 is provided in housing 4 and is an electronic control unit that controls apparatus 2. . . . Controller 50 also monitors the status of all various sensors, and provides

inputs for the valves and motors." (Ex. A, 5:22-30). Regarding controlling the venting arrangement (i.e., port 136), "when proportional valve 130, pursuant to a signal from controller 50, creates a negative pressure less than the maximum negative pressure level, a port 136, coupled to regulator 134, opens so that pump 110 can draw more air to maintain a sufficient flow through pump 110, to prevent it from becoming damaged." (Ex. A, 7:67 – 8:5).

53. In addition to the '462 Patent, on information and belief, prior art systems predate the '534 Patent. For example, Kinetic Concepts, Inc. manufactured and sold vacuum-assisted enclosure systems for wound treatments prior to the '534 Patent. Kinetic Concepts, Inc.'s V.A.C. ATS system was publicly available in 2003. *See* V.A.C. ATS User Manual (Aug. 12, 2003), *available at* content (ewh.org).

54. Medela will identify and disclose additional bases for invalidity in its invalidity contentions.

55. MEAC is entitled to no relief as the '534 Patent is invalid.

MEDELA'S PRAYER FOR RELIEF

WHEREFORE, Medela prays this Court enter judgment:

A. In favor of Medela and against MEAC, thereby dismissing Plaintiff's Complaint in its entirety, with prejudice, with Plaintiff taking nothing by way of its claims;

B. That Medela has not directly infringed, indirectly infringed, contributorily infringed, or induced the infringement of any valid claim of the '554 or '534 Patents;

C. That all asserted claims of the '554 and '534 Patents are invalid and/or unenforceable;

D. That this is a case that stands out from others and is thus exceptional under 35 U.S.C. § 285, and ordering Plaintiff to pay Medela reasonable attorneys' fees incurred in this action;

E. That the Court award Medela its costs and expenses incurred in this action and its attorneys' fees as permitted by law; and

F. That the Court award Medela such other and further relief that it deems appropriate.

JURY DEMAND

Medela demands a trial by jury on all triable issues.

Dated: January 8, 2024

PROSKAUER ROSE LLP

/s/ Erik B. Milch

Todd J. Ohlms
70 West Madison, Suite 3800
Chicago, IL 60602-4342
Phone: (312) 962-3550
tohlms@proskauer.com

Erik B. Milch (*pro hac vice)*
Elizabeth Shrieves (*pro hac vice)*
1001 Pennsylvania Ave. NW
Suite 600
Washington, DC 20004
Phone: (202) 416-6800
emilch@proskauer.com
eshrieves@proskauer.com

Attorney for Defendants Medela LLC and Medela Holding AG

CERTIFICATE OF SERVICE

The undersigned attorney hereby certifies that all counsel of record who are deemed to have consented to electronic service are being served with a copy of foregoing document via electronic filing and/or electronic mail on January 8, 2024.

/s/ Erik B. Milch
Erik B. Milch