March 27, 1962 R. C. STEVENS 3,026,874

WOUND SHIELD

Filed Nov. 6, 1959

FIG. 1

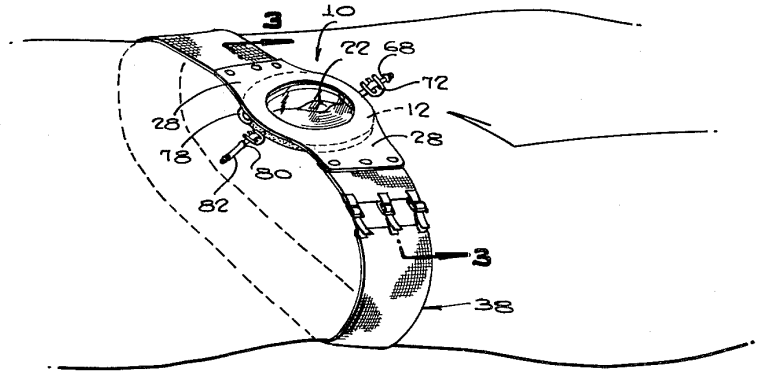

FIG. 2

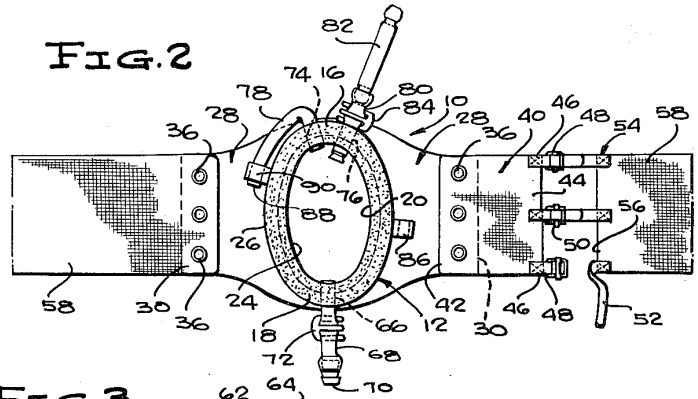

FIG. 3

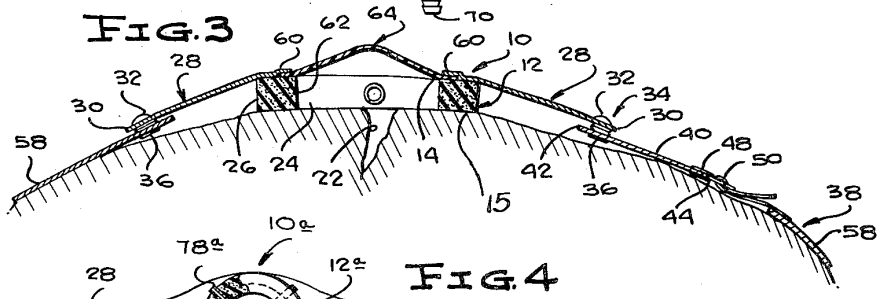

FIG. 4

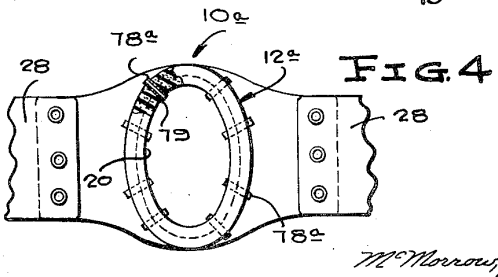

INVENTOR.
ROBERT C. STEVENS
BY

McMorrow, Berman & Davidson
ATTORNEYS

United States Patent Office

3,026,874

Patented Mar. 27, 1962

1

3,026,874
WOUND SHIELD

Robert C. Stevens, 6111 SW. 86th St., Miami, Fla.

Filed Nov. 6, 1959, Ser. No. 851,441
3 Claims. (Cl. 128—260)

This invention relates to a novel shield for surgically or otherwise produced surface wounds, the primary object of the invention being to provide an efficient and versatile device of this kind which enables and facilitates controlled drainage, either vacuum or gravity, and medication of a wound with the wound unbandaged, and with controlled admission or exclusion of air from the wound; and which surrounds and isolates the wound while avoiding contact with the wound and affording free visual inspection of the wound.

Another object of the invention is the provision of a comfortable and conveniently wearable device of the character indicated above, which is readily applied to different regions of the body of a patient, and which, when so applied is securely installed and can enable unusual freedom of mobility of the patient.

A further object of the invention is to provide a simple, unbulky, and structurally sound device of the character indicated above which is readily adjustable, and which can be easily and efficiently sterilized.

Other important objects and advantageous features of the invention will be apparent from the following description and the accompanying drawings, wherein, for purposes of illustration only, a specific form of the invention is set forth in detail.

In the drawings:

FIGURE 1 is a schematic perspective view showing a device of the invention applied to an abdominal surface wound;

FIGURE 2 is an enlarged bottom plan view of said device;

FIGURE 3 is an enlarged fragmentary vertical longitudinal section taken on the line 3—3 of FIGURE 1; and,

FIGURE 4 is a fragmentary bottom plan view of another form of the invention having a modified form of dam ring.

Referring in detail to the drawings, wherein like and related numerals designate like and related parts throughout the several views, and first to FIGURES 1 to 3, the device therein shown, and generally designated **10**, comprises a ring dam **12**, of generally circular, but preferably oval shape, and of preferably rectangular cross-section, provided with a preferably flat top surface **14**, a preferably flat bottom surface **15**, and first and second ends **16** and **18**, respectively. The dam **12** is made of soft, non-absorbent, resilient and compressible material which is substantially perfectly conformable to body surfaces without exertion of substantial pressure upon either the dam or the body surface. Dense foam or sponge rubber or inflated rubber or the equivalents in plastic are suitable materials for the dam **12**. The dam has a central opening **20**, substantially larger than the area of a wound **22** to be surrounded by the dam, which defines an inner edge **24** for the dam, to which its outer edge **26** preferably conforms concentrically.

Suitably fixed upon the top surface **14** of the dam **12**, on opposite sides thereof, are similar, clear sheet plastic, highly flexible and outwardly tapered belt anchors **28**, which have squared outer ends **30**, provided with elements of separable fastening means, such as male members **32** of snap fasteners **34**, spaced crosswise of the ends **30**, for engagement with female snap fastener elements **36**, on the ends of a flexible belt **38**.

The primary manner in which the device is held in position is by a belt of soft, non-absorbent, resilient and compressible material. The device may also be held in

2

position by any adhesive type cement compatible with the flesh. The latter means may be preferable on a smaller wound or on a relatively flat surface of the body.

For a wide range of adjustability and body conformance, the belt **38** preferably comprises on one end thereof a short end portion **40** having a squared inward end **42** on which female elements **36** are secured, and a squared outer end **44** to which is fixed as indicated at **46**, related ends of strap sections **48** which are adjustably connected, by means of buckles **50**, to related strap sections **52**, which are in turn fixed, as indicated at **54**, to the squared free ends **56** of a single flexible belt strap **58**.

As shown in FIGURE 3, the anchors **28**, at their inner ends, have free edge portions **60** which are clear of and are spaced above the top surface **14** of the dam **12**, to provide for retention, by insertion between the top surface **14** and the edge portion **60**, of the edges **62** of a conformably shaped, removable clear or transparent window plate **64**, which bridges the opening **20** of the dam **12** and, when in place, seals the space between itself, the body surface and wound, and the dam **12**, against entrance of outside air, in the absence of other accesses for air. As seen in FIGURE 3, the window plate **64** is preferably convex-concave, so that its edges **62** are tensioned outwardly into the seat between the dam and the anchor edge portions **60**.

Extending radially through the second end **18** of the dam **12** is the inner end **66** of a resilient and compressible drainage tube **68**, having secured in its outer end a nipple **70**, which is adapted to be connected, at times, to a vacuum or suction tube (not shown) when vacuum drainage is used. A shut-off valve or clamp **72** is provided for the drainage tube **68**.

Extending radially through the first end **16** of the dam **12**, at circumferentially spaced locations, are the inner ends **74** and **76**, of a flexible and compressible air vent tube **78** and a flexible and compressible irrigating or medicating tube **80**, respectively. As shown in FIGURE 2, the irrigating or medicating tube **80** has secured in its outer end, a rigid nipple **82**, for connection to the tube (not shown) of a source of irrigation or medication, and the flexible tube **80** is provided with a suitable shut-off valve or clamp **84**. A loop **86** is provided on the adjacent side of the dam **12**, through which the rigid tube section or nipple **82** is adapted to be passed, when not in use. A similar loop **88** is provided on the other side of the dam **12** to receive the outer end **90** of the air vent tube **78**. It is to be noted that the inner wall of the dam **12** with the adjacent portion of the window or window plate **64** forms an annular space of substantial depth. Also, the bottom surface of the dam **12** sealingly engages the skin of a human when the dam **12** carrying the window **64** and the tubes **68**, **78** and **80**, is disposed so as to encompass an area surrounding a wound on said human to thereby house said wound within said space completely sealed from the outside air.

It will be appreciated that a variation of the above described device is valuable in the cases of wounds which are antiseptically sealed but not sutured, as in research projects. This type of variation would have no air vents but would be adapted with self-sealing gaskets to admit drugs through the transparent flexible window. This would eliminate suturing and reduce the hazard of infection while still allowing visibility.

The form of the invention shown in FIGURE 4, and generally designated **10*a***, comprises a covered ring dam **12*a***, similar to that of FIGURES 1 to 3, having an opening **20** for similar disposal around a wound, and belt anchors **28** secured on its ends. The device **10*a*** is devoid of the single drainage tube, the suction tube, and the single vent tube of FIGURES 1 to 3, and has instead a plurality of circumferentially spaced air vent tubes **78*a***

which traverse the dam ring through horizontal bores **79** formed therethrough, for the purpose of supplying maximum controlled and protected flow of and access of air to a wound which the ring dam **12***a* surrounds.

Although there have been shown and described herein preferred forms of the invention, it is to be understood that any change or changes in the structures of and in the relative arrangements of components thereof are contemplated as being within the scope of the invention as defined by the claims appended hereto.

What is claimed is:

1. A wound shield comprising an annular dam having a central opening, said dam being fabricated wholly of soft, resilient and compressible non-absorbent material and having a top surface and a body-engaging bottom surface, a transparent and flexible window extending over and bridging the opening in said dam and sealingly secured to and carried by the top surface of said dam, the inner wall of said dam with the adjacent portion of said window forming an annular space of substantial depth, a first tube extending through said dam between the top and bottom surfaces of said dam and having one end in communication with said space and having the other end adapted for connection to a source of suction, and a second tube spaced from said first tube and extending through said dam between the top and bottom surfaces of said dam and having one end in communication with said space and having the other end adapted for connection to a source of medicament, the bottom surface of said dam sealingly engaging the skin of a human when the dam carrying the window and tubes is disposed so as to encompass an area surrounding a wound on said human to thereby house said wound within said space completely sealed from the outside air.

2. The wound shield according to claim 1 which includes in addition a flexible belt having the ends operatively connected to said dam for holding the dam carrying the window and tubes in mounted position upon said human.

3. The wound shield according to claim 1 which includes in addition a venting tube spaced from said first and second tubes and extending through said dam between the top and bottom surfaces and having one end in communication with said space and having the other end in communication with the atmosphere.

References Cited in the file of this patent

UNITED STATES PATENTS

1,677,641	Kinney	July 17, 1928
1,956,695	Reinitz	May 1, 1934
2,367,690	Purdy	Jan. 23, 1945

FOREIGN PATENTS

641,061	Great Britain	Aug. 2, 1950