US005735833A

United States Patent [19]

Olson

[11] Patent Number: 5,735,833

[45] Date of Patent: Apr. 7, 1998

[54] **LAVAGE TIP**

[75] Inventor: **Daniel H. Olson**, Louisville, Ohio

[73] Assignee: **Bristol-Myers Squibb Co.**, New York, N.Y.

[21] Appl. No.: **762,684**

[22] Filed: **Dec. 11, 1996**

[51] **Int. Cl.**[6] **A61M 35/00**; A61M 7/00

[52] **U.S. Cl.** **604/289**; 604/290; 604/313; 604/35; 604/23

[58] **Field of Search** 604/289, 290, 604/311, 312, 313, 35, 36, 23; 433/80, 96

[56] **References Cited**

U.S. PATENT DOCUMENTS

Re. 28,405	5/1975	Sollerud	604/289
D. 216,235	12/1969	Slee et al.	D24/3
D. 307,474	4/1990	Cook	D24/25
D. 344,133	2/1994	Stamler	D24/130
D. 345,016	3/1994	Stamler	D24/130
517,274	3/1894	Gollings	604/289
1,178,898	4/1916	Young .	
2,612,892	10/1952	Beatman	604/313
2,812,765	11/1957	Tofflemire	128/276
2,957,577	3/1960	Nicolaie	604/313
3,208,145	9/1965	Turner	32/33
3,713,423	1/1973	Sparr, Sr.	604/289
4,294,251	10/1981	Greenwald et al.	128/276
4,299,221	11/1981	Phillips et al.	128/276
4,400,168	8/1983	Buechel et al.	604/48
4,487,600	12/1984	Brownlie et al.	604/35
4,692,140	9/1987	Olson	604/40
4,769,003	9/1988	Stamler	604/39
4,776,793	10/1988	LaRocca	433/96
4,798,599	1/1989	Thomas	604/290
4,807,625	2/1989	Singleton	128/361
4,865,545	9/1989	LaRocca	433/96
4,872,837	10/1989	Issalene et al.	433/29
4,898,588	2/1990	Roberts	604/187
5,037,437	8/1991	Matsen, III	623/16
5,133,701	7/1992	Han	604/289
5,224,940	7/1993	Dann et al.	604/290
5,520,667	5/1996	Roche	604/290
5,554,111	9/1996	Morrey et al.	604/26
5,558,646	9/1996	Roche	604/143

FOREIGN PATENT DOCUMENTS

0122467	11/1927	Switzerland .
0149564	12/1931	Switzerland .

OTHER PUBLICATIONS

Surgical Jet Lavage–Stryker Corporation–No date available.

SurgiLav Tips and Splash Shields–Stryker Corporation–Sep. 1976.

The Zimmer Var–A–Pulse Wound Debridgement System–Zimmer, Inc.–literature No. 97–5150–604–c1996.

Primary Examiner—John G. Weiss
Assistant Examiner—David J. Cho
Attorney, Agent, or Firm—Margaret L. Geringer

[57] **ABSTRACT**

The invention is directed to a lavage tip for use with a lavage system to irrigate living tissue. A fluid tip includes a fluid port and a suction or vacuum port, with the fluid port and vacuum port defining a cross-sectional area. A shield is connected to the fluid tip which has an open end with a surface area which is substantially larger than the cross-sectional area of the fluid tip. The open end of the shield is configured for placement against the tissue to be irrigated. The shield includes an articulating joint allowing relative angular movement between the shield and the fluid tip, whereby substantially all of the tissue to be irrigated at the open end of the shield may be irrigated without repositioning the open end relative to the tissue. The fluid tip may include an oxygen port for providing oxygen therapy to the tissue.

7 Claims, 2 Drawing Sheets

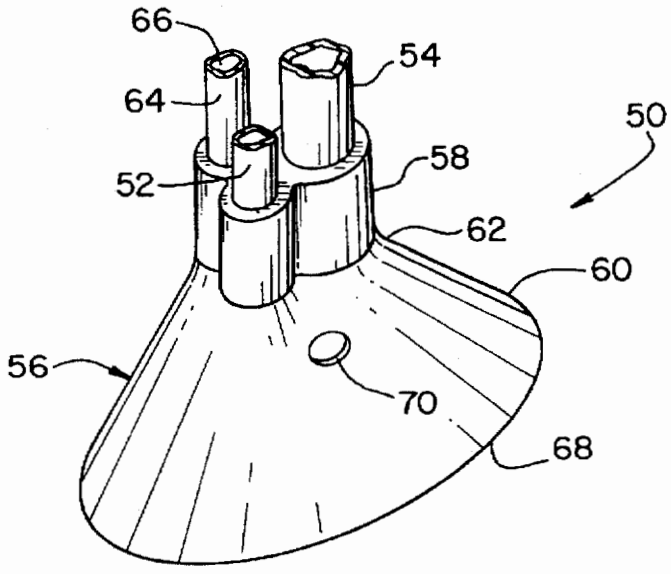

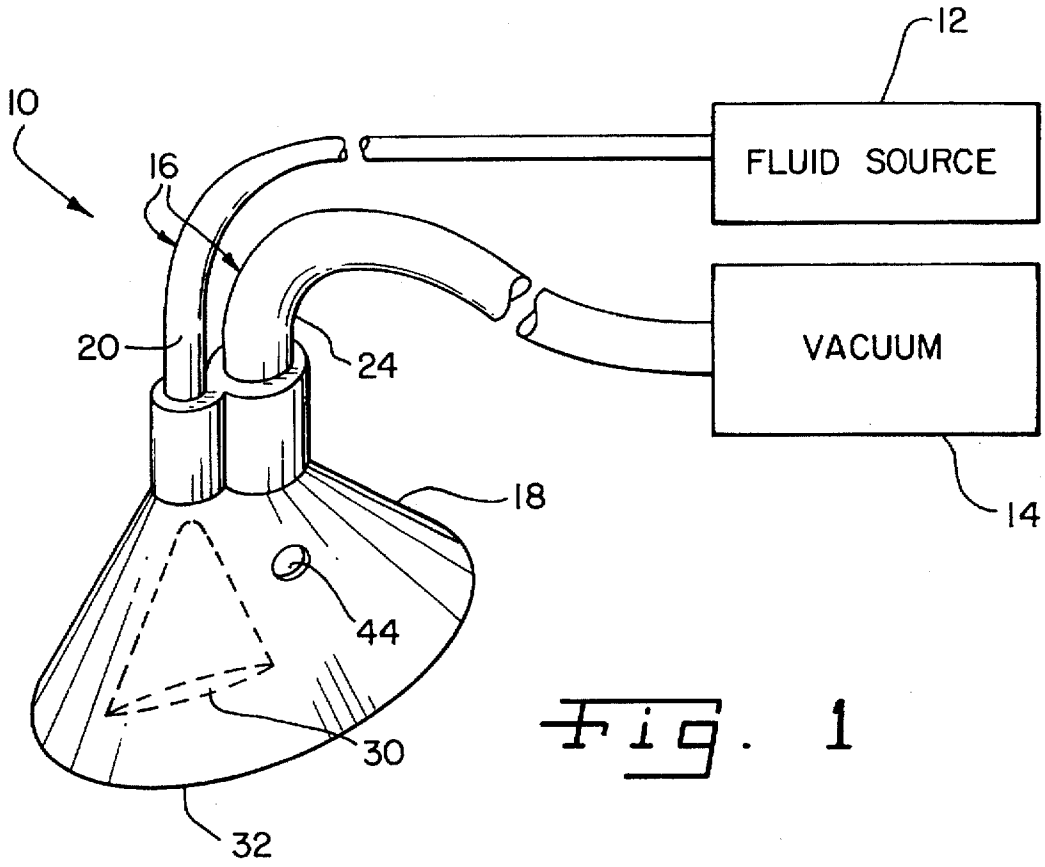
12
10
16
FLUID SOURCE
VACUUM
20
24
18
14
44
30
32

Fig. 1

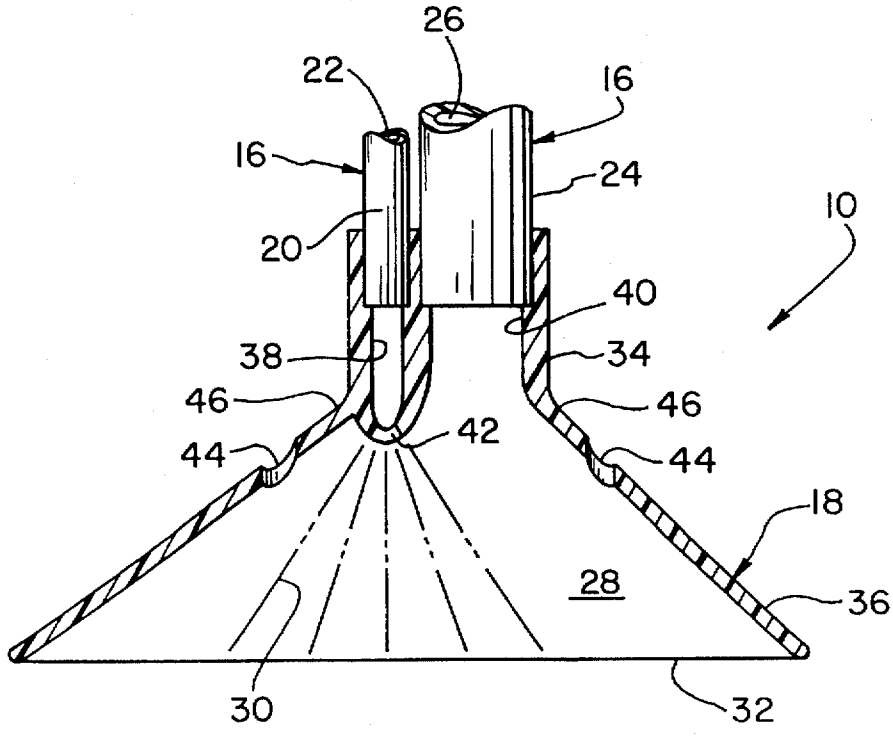
26
22
16
16
24
10
20
40
38
34
46
46
42
44
44
18
28
36
30
32

Fig. 2

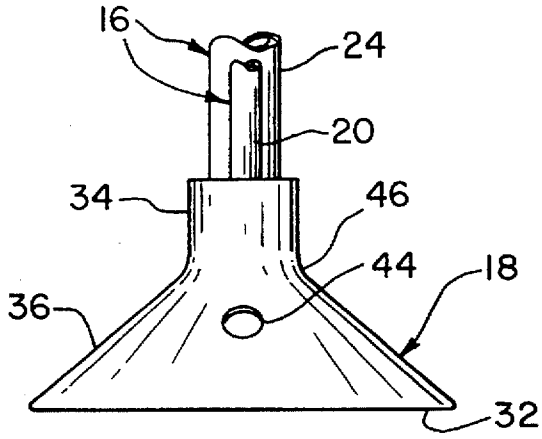

Fig. 3

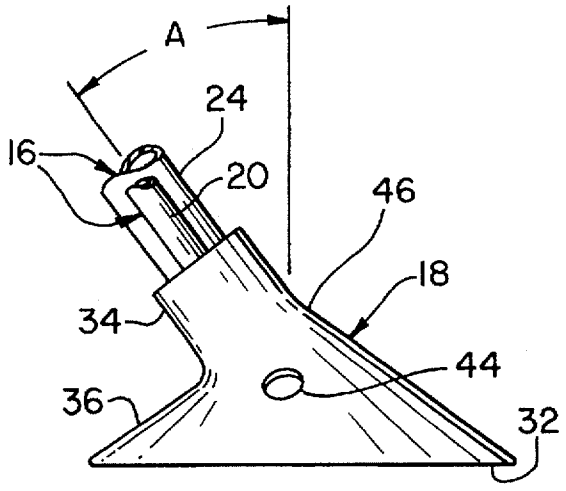

Fig. 4

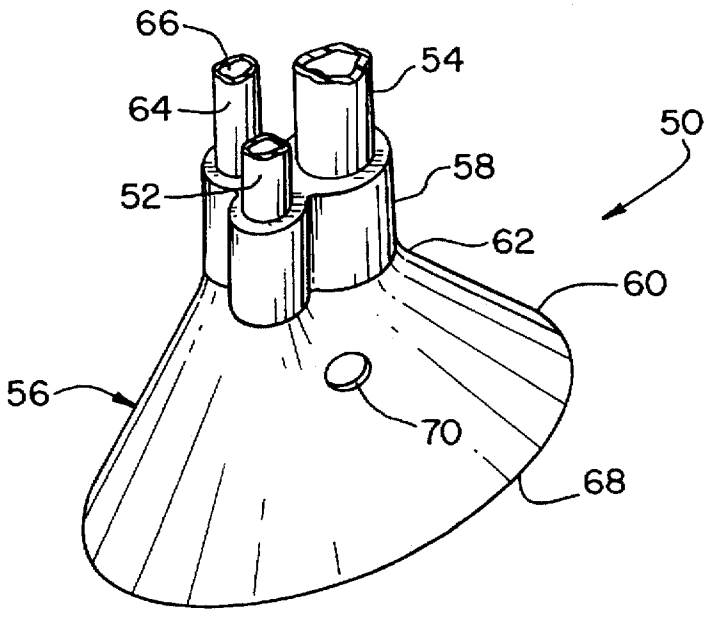

Fig. 5

LAVAGE TIP

BACKGROUND OF THE INVENTION

1. Field of the Invention

The present invention relates to a lavage tip for use with a lavage system to irrigate living tissue, and, more particularly, to such a lavage tip including a shield or splash guard.

2. Description of the Related Art

Hand held lavage systems are used to irrigate living tissue, such as skin or bone, to facilitate the cleaning and irrigation of a wound or incision site. Typically, the irrigating liquid is expelled through a lavage tip toward the tissue. The lavage tip allows the irrigating fluid to be directed at a particular orientation to the tissue. The irrigating fluid which impinges upon the tissue usually results in a splash back of the fluid.

U.S. Pat. No. 4,692,140 (Olson) discloses a lavage/suction tip having a dual splash shield which surrounds a fluid tip. The dual splash shield arrangement includes an inner pliable or flexible shield and an outer substantially rigid shield which may selectively be positioned over the inner shield. The fluid tip ejects a particular pattern of spray onto the tissue to be irrigated at the open end of the splash shield. The surface area of the splash shield at the open end adjacent the tissue is only about 1.23 square inches.

SUMMARY OF THE INVENTION

The present invention provides a lavage tip having a shield which is attached via an articulating joint to a fluid tip. The articulating joint allows relative angular movement between the shield and the fluid tip such that the tissue to be irrigated at the open end of the shield may be irrigated without repositioning the open end relative to the tissue. An oxygen port may also be provided within the fluid tip to provide oxygen therapy to the tissue under the shield to promote faster healing. The lavage tip of the present invention is particularly beneficial for epidermal lavage, such as for external skin ulcers or other chronic wounds.

The invention comprises, in one form thereof, a lavage tip for use with a lavage system to irrigate living tissue. A fluid tip includes a fluid port and a suction or vacuum port, with the fluid port and vacuum port defining a cross-sectional area. A flexible and transparent shield is connected to the fluid tip. The shield has an open end with a surface area which is substantially larger than the cross-sectional area of the fluid tip. The open end of the shield is configured for placement against the tissue to be irrigated. The shield includes an articulating joint allowing relative angular movement between the shield and the fluid tip, whereby substantially all of the tissue to be irrigated at the open end of the shield may be irrigated without repositioning the open end relative to the tissue. The fluid tip may include an oxygen port for providing oxygen therapy to the tissue or wound site to promote faster healing.

An advantage of the present invention is that a relatively large area of tissue may be irrigated without repositioning the lavage tip relative to the tissue.

Another advantage is that oxygen therapy may be provided to the tissue simultaneously with liquid irrigation of the tissue.

BRIEF DESCRIPTION OF THE DRAWINGS

The above-mentioned and other features and advantages of this invention, and the manner of attaining them, will

become more apparent and the invention will be better understood by reference to the following description of embodiments of the invention taken in conjunction with the accompanying drawings, wherein:

FIG. **1** is a perspective view of an embodiment of a lavage tip of the present invention;

FIG. **2** is a side, partially sectioned view of the lavage tip shown in FIG. **1**;

FIG. **3** is a side view of the lavage tip shown in FIGS. **1** and **2**, with the fluid tip disposed in a particular angular orientation relative to the shield;

FIG. **4** is a side view of the lavage tip shown in FIGS. **1–3**, with the fluid tip disposed in another angular orientation relative to the shield; and

FIG. **5** is a perspective view of another embodiment of a lavage tip of the present invention, including an oxygen port.

Corresponding reference characters indicate corresponding parts throughout the several views. The exemplifications set out herein illustrate one preferred embodiment of the invention, in one form, and such exemplifications are not to be construed as limiting the scope of the invention in any manner.

DETAILED DESCRIPTION OF THE INVENTION

Referring now to the drawings, and more particularly to FIGS. **1–4**, there is shown an embodiment of a lavage tip **10** of the present invention. Lavage tip **10** may be used with a lavage system, including a fluid source **12** and a suction device **14**, to irrigate living tissue, such as soft tissue at a wound or incision site, and is particularly suitable for irrigating epidermal tissue. Lavage tip **10** generally includes a fluid tip **16** and a shield **18**.

Fluid tip **16** includes a liquid delivery tube **20** defining a liquid port **22** (FIG. **2**). Liquid delivery tube **20** is connected to a fluid source **12** which supplies an irrigating liquid to lavage tip **10**. Liquid delivery tube **20** expels the irrigating liquid therefrom and into an internal chamber **28** of shield **18**. In the particular embodiment shown, the expelled liquid impinges upon the tissue to be irrigated in a substantially fan-shaped pattern **30** (FIGS. **1** and **2**).

Fluid tip **16** also includes a suction tube **24** defining a suction port **26**. Suction tube **24** is connected to vacuum or suction device **14**, and functions to remove irrigating liquid and debrided tissue from within shield **18** during operation of lavage tip **10**.

In the particular embodiment shown in FIGS. **1–4**, fluid tip **16** includes a liquid delivery tube **20** and a suction tube **24** which are separate from each other and individually attached to shield **18**. However, it is also to be understood that liquid delivery tube **20** and suction tube **24** may be formed as an integral unit. Regardless of whether liquid delivery tube **20** and suction tube **24** are formed separately or as an integral unit, they conjunctively define a cross-sectional area which generally corresponds to the surface area which is required to attach fluid tip **16** to shield **18**.

Shield **18** is a flexible and transparent shield having an open end **32** disposed generally opposite from fluid tip **16**. Open end **32** defines a surface area (not numbered) which is substantially larger than the cross-sectional area of fan-shaped pattern **30** which is expelled from liquid delivery tube **20**. In the embodiment shown in FIGS. **1–4**, open end **32** has a surface area of between approximately 5 and 20 square inches, and preferably has a surface area of approximately 11 square inches.

Shield **18** includes a neck **34** formed monolithically therewith. Neck **34** interconnects fluid tip **16** with a generally frustroconical-shaped portion **36** of shield **18**. More particularly, neck **34** includes a pair of openings **38**, **40** in which liquid delivery tube **20** and suction tube **24** are received, respectively. Opening **38** also defines an orifice **42** which effects the fan-shaped pattern **30** of liquid irrigant. However, it will also be appreciated that the end of liquid delivery tube **20** may be formed so as to effect any suitable shaped pattern of liquid irrigant. A plurality of vacuum break holes **44** in frustroconical-shaped portion **36** of shield **18** may be selectively covered with the fingers of the user, and allow varying vacuum pressures to be created within internal chamber **28** by varying the amount of ambient air which enters chamber **28**, as is known in the art. Internal chamber **28** is thus disposed in fluid communication with each of liquid port **22** and vacuum or suction port **26**.

At the juncture between neck **34** and frustroconical-shaped portion **36** is an articulating joint **46** which allows relative angular movement between shield **18** and fluid tip **16**. Such relative angular movement in turn allows the fan-shaped pattern **30** of liquid irrigant to be directed at different portions of the tissue under open end **32**, without repositioning lavage tip **10** relative to the tissue to be irrigated. That is, by rotating or moving tip **16** relative to shield **18**, substantially all of the tissue to be irrigated at open end **32** of shield **18** may be irrigated without repositioning open end **32** relative to the tissue. This results in faster operation since lavage tip **10** need not be repositioned as frequently relative to the tissue. Moreover, maintaining lavage system **10** in a single position or fewer positions relative to the tissue while at the same time irrigating all of the tissue under open end **32** reduces the amount of liquid which is not returned to vacuum device **14** via suction tube **24** since the seal or closure between shield **18** and the tissue is maintained over a larger surface area of the open end of shield **18**.

FIGS. **3** and **4** show side views of lavage tip **10** with shield **18** in two different positions relative to fluid tip **16**. In FIG. **3**, fluid tip **16** is disposed at a normal orientation, i.e., lacking external forces applied to lavage tip **10** by a user. In FIG. **4**, fluid tip **16** and neck **34** are rotated relative to frustroconical-shaped portion **36** of shield **18**. As is apparent, the majority of the elastic deformation in shield **18** occurs at articulating joint **46** between neck **34** and frustroconical-shaped portion **36**. Even though fluid tip **16** is rotated relative to frustroconical-shaped portion **36**, open end **32** still maintains the same approximate orientation as shown in FIG. **3**. The articulating joint allows relative angular movement between the shield and the fluid tip between the normal position of FIG. **3** and the angulated position of FIG. **4**. The angulated position may be angled up to about 45 to 90 degrees relative to the normal position, designated by angle A in FIG. **4**.

FIG. **5** is a perspective view of another embodiment of a lavage tip **50** of the present invention. Lavage tip **50** is similar to lavage tip **10** shown in FIGS. **1–4** in that a liquid delivery tube **52** and a suction tube **54** are connected to a shield **56**. Shield **56** includes a neck **58** connected to a frustroconical-shaped portion **60** via an articulating joint **62**. However, lavage tip **50** differs from lavage tip **10** shown in FIGS. **1–4** in that an additional oxygen delivery tube **64** defining an oxygen point **66** is also connected to neck **58**. Oxygen tube **64** is connected to a source of oxygen, O_2, (not shown) and allows oxygen to be expelled into an interior of shield **56** to provide oxygen therapy to the tissue under open end **68** of shield **56**. Oxygen within shield **56** may be suctioned through suction tube **54** or at least partially escape to the ambient environment through vacuum break holes **70** (one of which is shown in FIG. **5**). The oxygen therapy helps promote faster healing for epidermal lavage.

It is understood that this lavage tip **10** or **50** could be provided in various sizes, and the flexible shield **18** or **56** could be cut to the appropriate size as desired. Any suitable manufacturing methods may be used. In addition, the shield may be made out of 65 Durometer clear P.V.C., although any suitable materials may be utilized.

While this invention has been described as having a preferred design, the present invention can be further modified within the spirit and scope of this disclosure. This application is therefore intended to cover any variations, uses, or adaptations of the invention using its general principles. Further, this application is intended to cover such departures from the present disclosure as come within known or customary practice in the art to which this invention pertains and which fall within the limits of the appended claims.

What is claimed is:

1. A lavage tip for use with an epidermal lavage system to irrigate living tissue, said lavage tip comprising:

a fluid tip including a fluid port, a suction port and an oxygen port; and

a shield connected to said fluid tip, said shield having an open end configured for placement against the tissue to be irrigated, and wherein said shield defines an enlarged internal chamber which is disposed in fluid communication with each of said fluid port, said suction port and said oxygen port, and wherein said fluid port is configured for transporting an irrigating fluid to the chamber, said oxygen port is configured for transporting oxygen to the chamber to provide oxygen therapy to the tissue to promote faster healing, and said suction port is configured for transporting fluid from the chamber.

2. The lavage tip of claim **1**, wherein said fluid port is configured for expelling the liquid onto the tissue in a particular spray pattern, and wherein said open end of said shield has a surface area which is substantially larger than said spray pattern, said open end being configured for placement against the tissue to be irrigated, said shield including an articulating joint allowing relative angular movement between said shield and said fluid tip, whereby substantially all of the tissue to be irrigated at said open end of said shield may be irrigated without repositioning said open end relative to the tissue.

3. The lavage tip of claim **2**, wherein said surface area of said open end of said shield is between approximately 5 and 20 square inches.

4. The lavage tip of claim **3**, wherein said surface area of said open end of said shield is approximately 11 square inches.

5. The lavage tip of claim **10**, further comprising a neck attached to said shield and interconnecting said fluid tip with said shield, said articulating joint being disposed at a juncture between said neck and said shield.

6. The lavage tip of claim **2**, wherein the articulating joint allows said relative angular movement between a normal, first position and a second angulated position which is angled up to about 45 to 90 degrees relative to the first position.

7. A method of providing epidermal lavage for irrigation of external skin conditions comprising the steps of:

a) providing a lavage tip comprising a fluid port, a suction port, and an oxygen port;

b) providing a shield connected to said fluid tip, said shield having an open end configured for placement against a skin surface, and wherein said shield defines an enlarged internal chamber which is disposed in fluid communication with each of said fluid port, said suction port, and said oxygen port;

c) applying fluid to said skin surface through said chamber; and

d) applying oxygen to said skin surface under said enlarged chamber of said shield to help promote faster healing of said external skin condition; and

e) providing suction to transport fluid from the chamber.

* * * * *