US007708724B2

(12) **United States Patent**
Weston

(10) **Patent No.: US 7,708,724 B2**
(45) **Date of Patent: May 4, 2010**

(54) **REDUCED PRESSURE WOUND CUPPING TREATMENT SYSTEM**

(75) Inventor: **Richard Scott Weston**, Carlsbad, CA (US)

(73) Assignee: **Blue Sky Medical Group Incorporated**, Memphis, TN (US)

(*) Notice: Subject to any disclaimer, the term of this patent is extended or adjusted under 35 U.S.C. 154(b) by 953 days.

(21) Appl. No.: **11/098,203**

(22) Filed: **Apr. 4, 2005**

(65) **Prior Publication Data**

US 2005/0222528 A1 Oct. 6, 2005

Related U.S. Application Data

(60) Provisional application No. 60/559,727, filed on Apr. 5, 2004.

(51) **Int. Cl.**
A61M 1/00 (2006.01)

(52) **U.S. Cl.** **604/304**; 604/313

(58) **Field of Classification Search** 604/304, 604/313–316, 74–76, 385.04–385.05, 385.25–385.28, 604/385.101, 380
See application file for complete search history.

(56) **References Cited**

U.S. PATENT DOCUMENTS

765,746 A 7/1904 Miner
846,674 A 7/1907 Funk
1,355,679 A 10/1920 McConnell

(Continued)

FOREIGN PATENT DOCUMENTS

CA 2049948 C 10/1990

(Continued)

OTHER PUBLICATIONS

Arnljots et al., "Irrigation Treatment in Split-Thickness Skin Grafting of Intractable Leg Ulcers," Scandinavian Journal of Plastic and Reconstructive Surgery, 1985, vol. 19, pp. 211-213.

(Continued)

Primary Examiner—Tanya Zalukaeva
Assistant Examiner—Lynne Anderson
(74) *Attorney, Agent, or Firm*—Knobbe Martens Olson & Bear LLP

(57) **ABSTRACT**

A reduced pressure treatment appliance is provided for treating a wound on the body of a patient. In some embodiments, the appliance comprises a cover, which is further comprised of a top cup member and an interface member. The interface member comprises flow control means, which permit exudate from the wound to flow through the flow control means into the volume under the cover, but not in the opposite direction. Also, in some embodiments, the top cup member is further comprised of a lid member, a cup body member, and lid attachment means to removably attach the lid member to the cup body member. In some of these embodiments, it is possible to access the wound for monitoring, treatment and other purposes without removing the cover from the body. In other embodiments, the wound treatment appliance also includes a vacuum system to supply reduced pressure to the site of the wound in the volume under the cover. In yet other embodiments, a suction bulb may be used to provide a source of reduced pressure to a cover that covers the wound. Finally, methods are provided for using various embodiments of the treatment appliance.

80 Claims, 4 Drawing Sheets

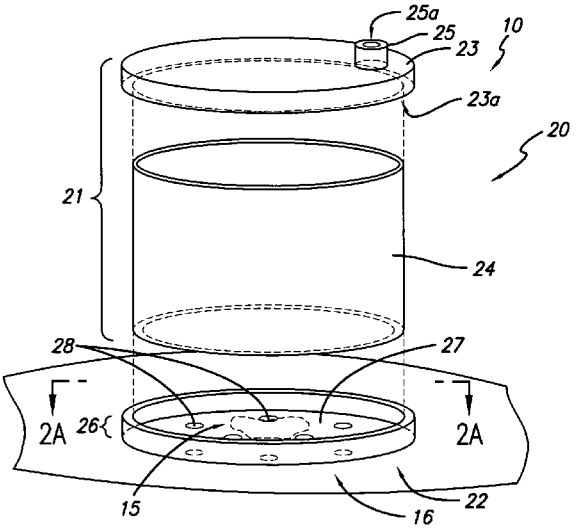

U.S. PATENT DOCUMENTS

1,355,846	A		10/1920	Rannells
1,385,346	A		7/1921	Taylor
1,585,104	A		5/1926	Montgomery
1,732,310	A		10/1929	Naibert
1,863,534	A		6/1932	Odell
1,936,129	A		11/1933	Fisk
2,122,121	A		6/1938	Tillotson
2,232,254	A		2/1941	Morgan
2,280,915	A		4/1942	Johnson
2,338,339	A		1/1944	La Mere et al.
2,366,799	A		1/1945	Luisada
2,367,690	A		1/1945	Purdy
2,547,758	A		4/1951	Keeling
2,969,057	A		1/1961	Simmons
3,026,526	A		3/1962	Montrose
3,026,874	A		3/1962	Stevens
3,042,041	A		7/1962	Jascalevich
3,217,707	A		11/1965	Werding
3,238,937	A		3/1966	Stein
3,286,711	A		11/1966	MacLeod
3,315,665	A		4/1967	MacLeod
3,367,332	A		2/1968	Groves
3,465,748	A		9/1969	Kravchenko
3,478,736	A		11/1969	Roberts et al.
3,486,504	A		12/1969	Austin, Jr.
3,568,675	A		3/1971	Harvey
3,572,340	A		3/1971	Lloyd et al.
3,610,238	A		10/1971	Rich, Jr.
3,682,180	A		8/1972	McFarlane
3,712,298	A		1/1973	Snowdon et al.
3,794,035	A		2/1974	Brenner
3,826,254	A		7/1974	Mellor
3,859,989	A		1/1975	Spielberg
3,874,387	A		4/1975	Barbieri
3,896,810	A		7/1975	Akiyama
3,908,664	A		9/1975	Loseff
3,938,540	A		2/1976	Holbrook et al.
3,954,105	A		5/1976	Nordby et al.
3,961,625	A		6/1976	Dillon
3,988,793	A		11/1976	Abitbol
3,993,080	A		11/1976	Loseff
RE29,319	E		7/1977	Nordby et al.
4,080,970	A		3/1978	Miller
4,112,947	A		9/1978	Nehring
4,149,541	A		4/1979	Gammons et al.
4,169,563	A		10/1979	Leu
4,172,455	A		10/1979	Beaussant
4,224,945	A		9/1980	Cohen
4,250,882	A		2/1981	Adair
4,256,109	A		3/1981	Nichols
4,261,363	A		4/1981	Russo
4,275,721	A		6/1981	Olson
4,297,995	A		11/1981	Golub
4,373,519	A		2/1983	Errede et al.
4,382,441	A		5/1983	Svedman
4,392,853	A		7/1983	Muto
4,419,097	A		12/1983	Rowland
4,444,548	A		4/1984	Anderson et al.
4,459,139	A		7/1984	vonReis et al.
4,465,485	A		8/1984	Kashmer et al.
4,469,092	A		9/1984	Marshall et al.
4,475,909	A		10/1984	Eisenberg
4,480,638	A		11/1984	Schmid
4,525,166	A		6/1985	Leclerc
4,527,064	A		7/1985	Anderson
4,540,412	A		9/1985	Van Overloop
4,543,100	A		9/1985	Brodsky
4,573,965	A		3/1986	Russo
4,605,399	A		8/1986	Weston et al.
4,608,041	A		8/1986	Nielsen
4,624,656	A		11/1986	Clark et al.
4,640,688	A		2/1987	Hauser
4,710,165	A		12/1987	McNeil et al.
4,738,249	A		4/1988	Linman
4,743,232	A		5/1988	Kruger
4,753,231	A		6/1988	Lang et al.
4,759,354	A		7/1988	Quarfoot
4,764,167	A		8/1988	Tu
4,765,316	A		8/1988	Marshall
4,778,456	A		10/1988	Lokken
4,820,265	A		4/1989	DeSatnick et al.
4,820,284	A		4/1989	Hauri
4,834,110	A		5/1989	Richard
4,836,192	A		6/1989	Abbate
4,838,883	A		6/1989	Matsuura
4,840,187	A		6/1989	Brazier
4,841,962	A		6/1989	Berg et al.
4,851,545	A		7/1989	Song et al.
4,863,449	A		9/1989	Therriault et al.
4,878,901	A		11/1989	Sachse
4,906,233	A		3/1990	Moriuchi et al.
4,917,112	A		4/1990	Kalt
4,921,488	A		5/1990	Maitz et al.
4,921,492	A		5/1990	Schultz
4,925,447	A		5/1990	Rosenblatt
4,931,519	A		6/1990	Song et al.
4,941,882	A		7/1990	Ward et al.
4,950,483	A		8/1990	Ksander
4,953,565	A		9/1990	Tachibana et al.
4,969,880	A		11/1990	Zamierowski
4,969,881	A		11/1990	Viesturs
5,035,884	A		7/1991	Song et al.
5,086,764	A		2/1992	Gilman
5,100,396	A		3/1992	Zamierowski
5,106,362	A		4/1992	Gilman
5,113,871	A		5/1992	Viljanto et al.
5,149,331	A		9/1992	Ferdman et al.
5,228,431	A		7/1993	Giarretto
5,261,893	A		11/1993	Zamierowski
5,462,514	A		10/1995	Harris
5,489,280	A	*	2/1996	Russell 604/311
5,549,584	A		8/1996	Gross
5,618,556	A		4/1997	Johns et al.
5,636,643	A		6/1997	Argenta
5,645,081	A		7/1997	Argenta
5,701,917	A		12/1997	Khouri
5,716,411	A		2/1998	Orgill et al.
5,827,246	A		10/1998	Bowen
5,830,496	A		11/1998	Freeman
5,893,368	A		4/1999	Sugerman
5,938,626	A		8/1999	Sugerman
5,970,266	A		10/1999	Argenta
6,045,541	A		4/2000	Matsumoto
6,135,116	A		10/2000	Vogel et al.
D434,150	S		11/2000	Tumey
6,142,982	A		11/2000	Hunt
6,176,307	B1		1/2001	Danos et al.
6,287,521	B1	*	9/2001	Quay et al. 422/101
6,402,724	B1		6/2002	Smith et al.
6,458,109	B1		10/2002	Henley et al.
6,471,685	B1		10/2002	Johnson
6,595,949	B1		7/2003	Shapiro
6,695,823	B1		2/2004	Lina et al.
6,936,037	B2		8/2005	Bubb et al.
6,951,553	B2		10/2005	Bubb et al.
6,979,324	B2		12/2005	Bybordi et al.
6,988,423	B2		1/2006	Bolam et al.
6,994,702	B1		2/2006	Johnson
7,004,915	B2		2/2006	Boynton et al.
7,070,584	B2		7/2006	Johnson et al.
7,077,832	B2		7/2006	Fleischmann
7,108,683	B2		9/2006	Zamierowski
7,117,869	B2		10/2006	Heaton et al.
7,128,735	B2		10/2006	Weston

7,198,046	B1	4/2007	Argenta et al.
7,216,651	B2	5/2007	Argenta et al.
2001/0029956	A1	10/2001	Argenta et al.
2002/0065494	A1	5/2002	Lockwood et al.
2002/0068913	A1	6/2002	Fleischmann
2002/0115952	A1	8/2002	Johnson
2002/0143286	A1	10/2002	Tumey
2002/0161346	A1	10/2002	Lockwood et al.
2002/0183702	A1	12/2002	Henley et al.
2002/0198503	A1	12/2002	Risk
2002/0198504	A1	12/2002	Risk
2003/0014025	A1	1/2003	Allen et al.
2003/0040687	A1	2/2003	Boynton et al.
2003/0050594	A1	3/2003	Zamierowski
2003/0108587	A1	6/2003	Orgill et al.
2003/0125646	A1	7/2003	Whitlock
2004/0054338	A1	3/2004	Bybordi et al.
2004/0073151	A1	4/2004	Weston
2004/0127863	A1	7/2004	Bubb et al.
2005/0148913	A1	7/2005	Weston
2005/0203452	A1	9/2005	Weston
2005/0222527	A1	10/2005	Miller et al.
2005/0222528	A1	10/2005	Weston
2005/0222544	A1	10/2005	Weston
2005/0261615	A1	11/2005	Weston
2005/0261642	A1	11/2005	Weston
2005/0261643	A1	11/2005	Bybordi et al.
2007/0239139	A1	10/2007	Weston et al.

FOREIGN PATENT DOCUMENTS

CA	2369000	A1	10/1990
CA	2103033	C	11/1992
CA	2414393	A1	11/1992
CA	2121688	C	5/1993
CA	2115951	A1	8/1994
CA	2157772	C	9/1995
CA	2198243	A1	2/1996
CA	2237606	A1	5/1997
CA	2238413	A1	5/1997
CA	2551340	A1	5/1997
CA	2272399	A1	11/1997
CA	2280817	A1	2/1998
CA	2267312	A1	4/1998
CA	2272372	A1	5/1998
CA	2303085	A1	3/1999
CA	2471780	A1	3/1999
CA	2347115	A1	4/2000
CA	2367460	A1	10/2000
CA	2369022	C	10/2000
CA	2369024	A1	10/2000
CA	2390513	A1	5/2001
CA	2408305	A1	11/2001
CA	2351342	A1	6/2002
CA	2442724	A1	10/2002
CA	2432293	A1	2/2003
CA	2458285	A1	3/2003
CA	2483654	A1	11/2003
CA	2490027	A1	12/2003
CA	2368085	C	5/2006
DE	561757		10/1932
DE	2809828		9/1978
DE	4111122		4/1993
GB	114754		4/1918
GB	641061		8/1950
GB	1273342		5/1972
GB	2195255	A	4/1988
SU	240188		3/1969
WO	WO 87/04626		8/1987
WO	WO 90/11795		10/1990
WO	WO 91/00718		1/1991
WO	WO 91/16030		10/1991
WO	WO 92/19313		11/1992
WO	WO 92/20299		11/1992
WO	WO 93/09727		5/1993
WO	WO 2005/115497		12/2005

OTHER PUBLICATIONS

Bagautdinov, "Variant of External Vacuum Aspiration in the Treatment of Purulent Diseases of Soft Tissues," Current Problems in Modern Clinical Surgery, 1986, 4 pages.
Boretos, "Cellular Polymers for Medical Use: The Vital Role of Porosity and Permeability," Cellular Polymers, 1984, vol. 3, pp. 345-358.
Chardak et al., "Experimental Studies on Synthetic Substitutes for Skin and Their Use in the Treatment of Burns," Annals of Surgery, 1962, vol. 155, No. 1, pp. 127-139.
Dilmaghani et al., "A Method for Closed Irrigation and Suction Therapy in Deep Wound Infections," Journal of Bone and Joint Surgery, 1969, vol. 51-A, No. 2, pp. 323-342.
International Standard ISO 10079-1, First Edition, May 15, 1991, 2 pages.
Meyer et al., "Bier's Hyperemic Treatment in Surgery, Medicine, and the Specialties: A Manual of Its Practical Application," 1908, 222 pages.
Orringer et al., "Management of Wounds in Patients with Complex Enterocutaneous Fistulas," Surgery, Gynecology, & Obstetrics, Jul. 1987, vol. 165, pp. 79-80.
Robertson, "The Influence upon Wound Contraction of a Negative Interstitial Fluid Pressure Within Granulation Tissue," Journal of Anatomy, 1969, vol. 105, No. 1, pp. 189.
Svedman, "Irrigation Treatment of Leg Ulcers," The Lancet, Sep. 3, 1983, pp. 532-534.
Teder, et al., "Continuous Wound Irrigation in the Pig," Journal of Investigative Surgery, 1990, vol. 3, pp. 399-407.
Tennant, "The Use of Hyperemia in the Postoperative Treatment of Lesions of the Extremities and Thorax," Journal of the American Medical Association, 1915, vol. 64, No. 19, pp. 1548-1549.
Westaby et al., "A Wound Irrigation Device," The Lancet, Sep. 2, 1978, pp. 503-504.
3M Health Care, Controlling the Risk of Surgical Site Infections after Cardiovascular Procedures: The Importance of Providing a Sterile Surface, *Brochure*, St. Paul, MN and London, Ontario, Canada, 1997, 8 pages.
AEROS, "Moblvac II," 1 page.
AEROS, Aeros Instruments, Inc. 1111 Lakeside Dr., Gurnee, IL 60031. Aug. 1993. "Care-E-Vac," 2 pages.
AEROS, Aeros Insturments, Inc. 3411 Commercial Ave., Northbrook, IL 60062. Oct. 1988. Part No. 1504-02 7M. "Instavac Aspirator," 1 page.
Agarwala, S., et al., Use of Mini-Vacuum Drains in Small Surgical Wounds, *Plastic and Reconstructive Surgery*, Apr. 1998, 101(5), 1421-1422 (Correspondence).
Agrama, H.M., Functional Longevity of Intraperiotoneal Drains, *Amer. Journ. of Surg.*, Sep. 1976, 132, 418-421.
Alper, J.C., et al., An Effective Dressing for a Large, Draining Abdominal wound, *RN*, Dec. 1988, 24-25.
Alper, J.C., et al., Moist Wound Healing under a Vapor Permeable Membrane, *Journ. of Amer. Acad. of Derm.*, Mar. 1983, 8(3), 347-353.
Arturson, M. Gosta, "The Pathophysiology of Severe Thermal Injury," *JBCR*, 6(2): 129-146 (Mar.-Apr. 1985).
Ashrafov, A.A. and K.G. Ibishov, An Experimental and Clinical Validation for the Use of a Collagen Sponge for Treating the Suppurative-Inflammatory Complications of Wound Healing in Emergency Abdominal Surgery, *PubMed*, Abs. Downloaded from Internet, Apr. 24, 2006, 1 page.
Aubrey, D.A., et al., Treatment of the Perineal Wound after Proctectomy by Intermittent Irrigation, *Arch. Surg.*, Oct. 1984, 119, 1141-1144.
A Sensational Medical discovery, *Brit. Journ. Nurs.*, Jul. 15, 1911, 42.
Article Excerpt, *Lancet*, Jun. 14, 1952, 1175-1176.
Article Excerpt: Part III. Resolving Selected Clinical Dilemmas, 17-20.

Assessing the Patient with a Fistula or Draining Wounds, *Nursing*, Jun. 1980, 49-51.
Chart: Influence of Wound Closure on Healing of Perineal Wound after Abdominoperineal Resection or Total Proctocolectomy, excerpt faxed Jan. 23, 2006, 1 page.
Hanbok för Hälso-Och Sjukvàrdsarbete Lokal Anvisning för Landstinget Sörmland, Jan. 2001, (in Swedish), Downloaded from Internet http://www.landstinget.sormland.se, Aug. 14, 2001, 7 pages.
Hyperemia by Suction Apparatus, *Chapter VIII*, 74-85.
Reference Handbook of the Medical Sciences, *Hyperaemia*, 553.
Specific Inflammations, Diseases of the Skin, 549-550.
The Bier Treatment, *Brit. Journ. Nurs.*, Jun. 6, 1908, 452.
Leherman, "The Not-So-Bald-Truth," *Science*, Sep. 1992, p. 42.
The British Journal of Nursing, Nov. 4, 1911, 368.
Tuberculous Joints, *Nursing record & Hospital World*, Apr. 28, 1894, 280.
Wound Suction: Better Drainage with Fewer Problems, *Nursing* Oct. 1975, 52-53.
Medela, Inc. Product Information (with English Summary): "Pleupump MK II is the new micro-data controlled thoracic drainage," 12 pages.
Avocat, C. et al., Nouvelle Presentation de Materiel Pour Drainage de Redon et Jost, *La Nouvelle Press Medicale*, Jun. 26, 1976, 5(6), 1644-1645 (in French).
Ayoub, M.H. and G. C. Bennet, A Study of Cutaneous and Intracompartmental Limb Pressures Associated with the Combined Use of Tourniquets and Plaster Casts, Abs., *Proc. and Reports of Univ., Colleges, Councils, Assoc., and Societies*, 68-B:3, May 1986, 497.
Baldwin, J.F., Ed., The Columbus Medical Journal, Columbus , Ohio, 1887, vol. 5, 561.
Barbul, A., et al., Eds., Clinical and Experimental Approaches to Dermal and Epidermal Repair, Normal and Chronic Wounds, Progress in Clin. and Biol. Res., vol. 365, *Proc. of the 3rd Intnl. Symp. on Tissue Repair*, Miami, FL, Jan. 10-14, 1990, Abs.
Bar-El, Y. et al., Potentially dangerous Negative Intrapleural pressures Generated by Ordinary Pleural Drainage Systems, *Chest*, Feb. 2001, 119(2), 511-514.
Barker, D.E., et al., Vacuum Pack Technique of Temporary Abdominal Closure: A 7-Year Experience with 112 Patients, *Journ. of Trauma: Injury and Critical Care*, Feb. 2000, 4892), 201-207.
Bascom, J., Pilonidal Sinus, *Current Therapy in Colon and Rectal Surgery*, 1990, 1-8.
Benjamin, P.J., Faeculent Peritonitis: A Complication of Vacuum Drainage, *Br. J. Surg.*, 1980, 67, 453-454.
Berman and Fabiano, Closed Suction Drainage, *Orthopedics*, Mar. 1990, 13(3), 310-314.
Berman, A. T., et al., Comparison Between Intermittent (Spring-Loaded) and Continuous Closed Suction Drainage of Orthopedic Wounds: A Controlled Clinical Trial, *Orthopedics*, Mar. 1990, 13(3), 9 pgs.
Besst, J.A., Wound Healing—Intraoperative Factors, *Nursing Clinics of North America*, Dec. 1979, 14(4), 701-712.
Biblehimer, "Dealing With a Wound that Drains 1.5 Liters a Day," RN, Aug. 1986, pp. 21-23, USA.
Bier, A., Hyperemia as a Therapeutic Agent, Ed. Dr. Gustavus M. Blech, A. Robertson & Co., Chicago 1905, (the entire reference has been submitted, but pp. 74-85 may be the most relevant).
Birdsell, D.C., et al., The Theoretically Ideal Donor Site Dressing, *Gadgetry, Div. of Plastic Surgery, Foothills, Hospital*, Calgary, Canada, 535-537.
Bischoff, et al., Vacuum-Sealing Fixation of Mesh Grafts, *Euro. Journ. Plast. Surg.*, Jul. 2003, 26(4), 189-190, Abs. Downloaded from internet Apr. 6, 2006.
Bonnema, J., et al., A Prospective Randomized Trial of High Versus Low Vacuum Drainage after Axillary Dissection for Breast Cancer, *Amer. Journ. Surg.*, Feb. 1997, 173, 76-79.
Britton, B.J., et al, A Comparison Between Disposable and Non-Disposable Suction Drainage Units: A Report of a Controlled Trial, *Br. J. Surg.* 1979, 66, 279-280.
Broader, J.H., et al., Management of the Pelvic Space after Proctectomy, *Br. J. Surg.*, 1974, 62, 94-97.
Bruno, P., The Nature of Wound Healing: Implications for Nursing Practice, *Nursing Clinics of North American*, Dec. 1979, 14(4), 667-682.
Bucalo et al. "Inhibition of Cell Proliferation by Chronic Wound Fluid." Wound Repair and Regeneration. Miami, 1993. pp. 181-186.
Burdette-Taylor, S.R., Use of the Versatile One (V1) for Closed Suction Drainage to Stimulate Closure in Chronic Wounds in Home Care, Case Study Presentation, 2003, 2 pgs.
Bush, G.K., What is a Counter Irritant? Name Any That You Know and the Method of their Application, *Brit. Journ. Nurs.*, Oct. 1927, 232.
Calhoun, P. and K. Kenney, Pouching Management of Patients with Open abdomen, Eviscerations and Bowel Fistulas, Case Studies, *Univ. of Miami/Jackson Memorial Medical Center*, 1 page.
Candiani, P., et al., Repair of a Recurrent Urethrovaginal Fistula with an Island Bulbocavernous Musculocutaneous Flap, *Plastic and Reconstructive Surgery*, Dec. 1993, 1393-1394.
Carroll, P.L., The Principles of Vacuum and its Use in the Hospital Environment, 2nd Ed., 1986, 30p.
Chariker, M.E., et al, "Effective Management of Incisional and Cutaneous Fistulae with Closed Suction Wound Drainage," Contemporary Surgery, Jun. 1989, pp. 59-63, vol. 34 USA.
Chua Patel, C.T., et al., Vacuum-Assisted Closure, *AJN*, Dec. 2000, 100(12), 45-49.
Clark, R.A.F., The Molecular and Cellular Biology of Wound Repair, Chapter 1: Overview and General Considerations of Wound Repair 1988, 3-33.
Cobb, J.P., Why Use Drains?, *Br. J. Bone Joint Surg.*, Nov. 1990, 72-B(6), 993-995.
Cooper, D.M., Optimizing Wound Healing, *Nursing Clinics of North America*, Mar. 1990, 25(1), 163-179.
Cooper, D.M., Postsurgical Nursing Intervention as an Adjunct to Wound Healing, *Nursing Clinics of North America*, Dec. 1979, 14(4), 713-726.
Cooper, S.M. and E. Young, Topical Negative Pressure, *Commentary, International Journal of Dermatology 2000*, 39, 892-898.
Costunchenok, B.M., et al., Effect of Vacuum on Surgical Purulent Wounds, *Vestnik Chirurgia 1986*, Sep. 18-20 (in Russian with English translation).
Cotton, P.B., et al., Early Endoscopy of Oesophagus, Stomach, and Duodenal Bulb in patients with Haematemesis and Melaena, *Br. Med. Journ.*, Jun. 1973, 2, 505-509.
Crisp, W.J. and A. Gunn, Granuflex Dressings for Closed Surgical Wounds Combined with Suction Drainage, *Annals of the Royal College of Surgeons of England*, 1990, 72, p. 76.
Cucuroos, Y.C., Vacuum Drainage of Post Operative Wounds, *Kiev Army Hospital, Dept. of Hospital Surgery, Kiev Medical University*, 64-65 (in Russian with English translation).
Curtin, L.L., Wound Management: Care and Cost—An Overview, *Nursing Management*, Feb. 1984, vol. 15, 22-25.
Davis, J.C. and T.K. Hunt, Eds., Problem Wounds: The Role of Oxygen, Chap. 1, Infection and Oxygen, 1988, 1-15.
Davidov Y., "Vacuum therapy in the treatment of purulent lactation mastitis," Vestnik Khirurgii, Sep. 1986, pp. 66-70.
Davidov, Y., "Bacteriological and cytological evaluation of the vacuum therapy of suppurative wounds," Vestnik Khirurgii, Oct. 1988, pp. 48-52.
Davidov, Y.A., et al. Justifying the Usage of Force Early Secondary Sutures in treatment of Purulent Wounds by the Vacuum Therapy, *Vestnik Chirurgia 1990*, March Edition, 126-129 (in Russian with English translation).
Davidov, Y.A., et al., Concept of Clinico-Biological Management of Wound Process in Treatment of Purulent Wounds with the Help of Vacuum Therapy, *Vestnik Chirurgia 1991, February Edition*, 132-135 (in Russian with English translation).
Davidov et al. "Pathogenic Mechanism of the Effect of Vacuum Therapy on the Course of the Wound Process" pp. 43-46 (Dec. 1990).
Deknatel, Div. of Howmedica, Inc. Queens Village, NY 11429. "Pleur-evac," 1 page.
Dillon, Angiology, The Journal of Vascular Diseases, "Treatment of Resistant Venous Stasis Ulcers and Dermatitis with the End-Diastolic Pneumatic Compression Boot," Jan. 1986, pp. 47-55.

Doillon, C.J., et al., Collagen-Based Wound Dressings: Control of the Pore Structure and Morphology, Journal of Biomedical Materials Research, Sep. 13, 2004, 20(8), 1219-1228. Abs. Downloaded from Internet http://www3.interscience.wiley.com, Apr. 28, 2006.
Domkowski, P.W., et al., Evaluation of Vacuum-Assisted Closure in the Treatment of Poststernotomy Mediastinitis, *Journ. of Thorac. and Cardiovascular Surg.*, Aug. 2003, 126(2), 386-390.
Doss, Mirko, et al., Vacuum-Assisted Suction Drainage Versus Conventional Treatment in the Management of Poststernotomy Osteomyelitis, *Euro. Journ. Cardio-Thoracic. Surg.* 22 (2002) 934-938.
Draper, J., Make the Dressing Fit the Wound, *Nursing Times*, Oct. 9, 1985, 32-35.
Dunbar, J.M., State What You Have Learned Recently on the Up-to-Date Care of Wounds, *The British Journal of Nursing*, Dec. 1941, 200.
Dunlop, M.G, et al. Vacuum Drainage of Groin Wounds after Vascular Surgery: A Controlled Trial, *Br. J. Surg.*, May 1990, 77, 562-563.
Eaglstein, W.H., et al., Wound Dressings: Current and Future, *Clin. and Exper. Approaches to Dermal and Epidermal Repair: Normal and Chronic Wounds*, 1991, 257-265.
ECRI, Target Report, Negative Pressure Wound Therapy for Chronic Wounds, Jan. 24, 2006, 1-7, Downloaded from internet, http://www.target.ecri.org/summary/detail.aspx?dox_id=1155.
Eisenbud, D.E., Modern Wound Management, *Anadem Publishing*, Chap. 16, 109-116.
Ellingwood, F., Ellingwood's Therapeutist, Jun. 14, 1908, vol. 2(6), 32-33.
Elwood, E.T., and D.G. Bolitho, Negative-Pressure Dressings in the Treatment of Hidradenitis Suppurative, *Annals of Plastic Surgery*, Jan. 2001, 46(1), 49-51.
Emerson, Series 55, J.H. Emerson Co., 22 Cottage Park Ave., Cambridge, MA 02140. "Emerson Post-Operative Suction Pumps," 2 pages.
Engdahl, O. and J. Boe, Quantification of Aspirated Air Volume reduces Treatment Time in Pneumothorax, *Eur. Respir, J.*, 1990, 3, 649-652.
Engdahl, O., et al., Treatment of Pneumothorax: Application of a Technique which Quantifies Air Flow Through the Chest Drain, *Adv. in Therapy*, May/Jun. 1988, 5(3), 47-54.
Erichsen, J.E., Science and Art of Surgery, *London: Longmans, Green, and Co.*, 1895, vol. 1, 258-259, and p. 289.
Fabian, T.S., The Evaluation of Subatmospheric Pressure and Hyperbaric Oxygen in Ischemic Full-Thickness Wound Healing, *Ischemic Full-Thickness Wound Healing*, Dec. 2000, 66(12), 1136-1143.
Falanga, Vincent, "Growth Factors and Chronic Wounds: The need to Understand the Microenvironment." *Journal of Dermatology*, vol. 19: 667-672, 1992.
Fay, M.F., Drainage Systems: Their Role in Wound Healing, *AORN Journal*, Sep. 1987, 46(3), 442-455.
Fellin, R., Managing Decubitus Ulcers, *Nursing Management*, Feb. 1984, 29-30.
Fingerhut, A., et al., Passive vs. Closed Suction drainage after Perineal Wound Closure Following Abdominoperineal Rectal Excision for Carcinoma, *Dis Colon Rectum*, Sep. 1995, 926-932.
Firlit, C.F. and J.R. Canning, Surgical Wound Drainage: A Simple Device for Collection, *Journ. of Urology*, Aug. 1972, 108, p. 327.
Fisher, Jack, and R. W. Bert, Jr., A Technique for Skin Grafting Around Abdominal Wall Fistulas, *Annals of Plastic Surgery*, 11:6, Dec. 1983, 563-564.
Flanagan, et al., Optional Sump: Novel Use of Triple Lumen Closed Drainage System, *Anz. J. Surg.*, Nov. 2002, 72(11), 806-807, Abs. Downloaded from internet Nov. 30, 2003, 1 page.
Fleck, C.A., When Negative is Positive: A Review of Negative Pressure Wound therapy, *Wound Care*, Mar./Apr. 2004, 20-25.
Fleischmann, W. Acta Orthopaedical Belgica, "Treatment of Bone and Soft Tissue Defects in Infected Nonunion," vol. 58, *Suppl. I-1992*, pp. 227-235.
Fleischmann, W. Unfall Chirurg, Springer-Variag, "Vakuumversiegelung zur Behandlung des Weichteilschadens bei offenen Frakturen," (English abstract, no English translation), 1993, pp. 488-492.
Fleischmann, W. Wund Forum Spezial, "Vakuumversiegelung zur Behandlung von Problemwunden" (with English translation: Vacuum Sealing for Treatment of Problematical Wounds), *IHW '94*, 6 pages.
Fleischmann, "Vacuum sealing: indication, technique, and results," *European Journal of Orthopaedic Surgery & Traumatology*, vol. 5(1), 1995, pp. 37-40.
Flynn, M.E. and D.T. Rovee, Wound Healing Mechanisms, *Amer. Journ. of Nursing*, Oct. 1982, 1544-1556.
Fox, J.W. and G.T. Golden, The Use of Drains in Subcutaneous Surgical Procedures, *Amer. Journ. of Surg*, Nov. 1976, 132, 673-674.
Garcia-Rinaldi, R., et al., Improving the Efficiency of Wound Drainage Catheters, Amer. Journ. of Surg., Sep. 1975, pp. 130, 372-373.
Geiger Jones, E., et al., Management of an Iliostomy and Mucous Fistula Located in a Dehisced Wound in a Patient with Morbid Obesity, *J. WOCN*, Nov. 2003, 30(6), 351-356.
Gill, P., What is a Counter-Irritant? Name Three and the Method of Applying them, *Brit. Journ. Nurs.*, Jun. 1934, 142.
Goddard, L., Inflammation: Its Cause and Treatment, *The British Journal of Nursing*, Jan. 1944, 2.
Gogia, Prem P., "The Biology of Wound Healing." *Ostomy/ Wound Management.* Nov.-Dec. 1992, pp. 12-20.
Gomco Suction Equipment & Accessories Guide, Catalog, Apr. 2006, 20 pages.
Gouttefangeas, C. et al., Functional T Lymphocytes Infiltrate Implanted Polyvinyl Alcohol Foams During Surgical Wound Closure Therapy, *Clin. Exp. Immunol. 2001*, 124, 398-405.
Grabowski, S., Leczenie ran z zastosowaniem posicśnienia (wg Redona I Josta), *II Klinik Xhieuefxnej AM w Warszawie; klerownik*: Prof. Dr. Z. Lapinski, No. 1, 19-21 (*in Polish*).
Grishdevich, V. and N. Ostrovsky, Postburn Facial Resurfacing with a Split Ascending Neck Flap, *Plastic and Reconstructive Surgery*, Dec. 1993, 1384-1391.
Grobmyer, et al., High-Pressure Gradients Generated by Closed-Suction Surgical Drainage Systems, *Surg. Infect.* (*Larchmt*), *Autumn 2002*, 3(3), 245-249, Abs., Downloaded Nov. 30, 2003.
Grover, R. and R. Sanders, Recent Advances: Plastic Surgery, Clinical Review, *BMJ*, Aug. 8, 1998, 317, 397-400.
Gupta, S., Ed., Guidelines for Managing pressure Ulcers with Negative Pressure Wound Therapy, *Advances in Skin & Wound Care Suppl.*, Nov./Dec. 2004, 17(2), 1-16.
Gupta, S., Guidelines for Managing: Pressure Ulcers with Negative Pressure Wound Therapy, Downloaded from internet http://proquest.umi.com on Feb. 3, 2006, 19 pages.
Gwan-Nulla, D.N. and R.S. Casal, Toxic Shock Syndrome Associated with the Use of the Vacuum-Assisted Closure Device, *Ann. Plast. Surg.*, Nov. 2001, 47(5), 552-554.
Hallstrom, B.R. and J.F. Steele, Postoperative Course after Total Hip Arthroplasty: Wound Drainage versus No Drainage, *Orthopaedic Review*, Jul. 1992, 847-851.
Hargens et al., "Control of Circulatory Functions in Altered Gravitational Fields," *Space Physiology Laboratory, Life Science Division, NASA Ames Research Center*, 4 pages.
Hargens et al., "Lower Body Negative Pressure to Provide Load Bearing in Space," *Aviation, Space and Environmental medicine*, Oct. 1991, pp. 934-937.
Harkiss, K., Cheaper in the Long Run, *Community Outlook*, Aug. 1985, 19-22.
Harle, A. Z. Orthop.,"Schwachstellen herkommlicher Drainagen," 127(1989): 513-517.
Hartz, R.S., et al., Healing of the Perineal Wound, *Arch. Surg.*, Apr. 1980, 115, 471-474.
Harvard Pilgrim Health Care, Technology Assessment Policy, TA 6.29 Negative Pressure Wound therapy for Wound Healing, Dec. 2004, pp. 1-6.
Hay, J., et al., Management of the Pelvic Space With or Without Omentoplasty after Abdominoperineal Resection for Carcinoma of the Rectum: a Prospective Multicenter Study, *Eur. J. Surg*, 1997, Abs., 1 page.
Higgins, S., The Effectiveness of Vacuum Assisted Closure (VAC) in Wound Healing, *Centre for Clinical Effectiveness, Monash Medical Centre*, Clayton VIC Australia, Dec. 2003, 1-16.

Hilsabeck, J.R., The Presacral Space as a Collector of Fluid Accumulations Following Rectal Anastomosis: Tolerance of Rectal Anastomosis to Closed Suction Pelvic Drainage, *Amer. Soc. of Colon and Rectal Surgeons*, Oct., 25(7), 680-684.
Hilton, P., Wound Drainage: A Survey of Practices among Gynaecologists in the British Isles, *Br. Journ. of Obstetrics and Gynaecology*, Oct. 1988, 95, 1063-1069.
Hollis, H.W. and M.R. Troy, A Practical Approach to Wound care in patients with Complex Enterocutaneous Fistulas, *Surg., Gyn. & Obs.*, Aug. 1985, 161, 179-181.
Hugh, T.B., Abdominal Wound Drainage, *Med. Journ. of Australia*, May 4, 1987, 146, p. 505 (Correspondence).
Hulten, L., et al., Primary Closure of Perineal Wound after Proctocolectomy or Rectal Excision, *Acta Chir. Scand.*, 1971, 137, 467-469.
Hunt, T.K. and J.E. Dunphy, Eds., Fundamentals of Wound Management, *Appleton-Century-Crofts/New York*, 416-447.
Ilizarov, G. A., The Tension-Stress Effect on the Genesis and Growth of Tissues: Part II., *Clinical Orthopaedics and Related Research*, Feb. 1989, 239, 263-283.
Creative Medical Laboratories, Instruction Manual, Inc. P.O. Box 6347, Rochester, Minn. 55903. "TUGS" (Transportable Universal Gradient Suction), 8 pages.
Izmailov, S.G., et al., Device for Treatment of wounds and Abdominal Cavity, Contents, Downloaded from internet http://www.mediasphera.ru/surgery/97/8/e8-97ref.htm, *Surgery* No. 8 1997, 1 page.
Izmailov, S.G., The Treatment of Eventrations with a Special Apparatus, Abstracts, Downloaded from internet, http://www.mediasphera.ru/surgery/97/1/el-97ref.htm, *Surgery* No. 1 1997, 1 page.
Jeter, K., Closed Suction Wound Drainage System, *J. WOCN*, Mar./Apr. 2004, 51 (correspondence).
Jeter, Katheerine F. ET, "Managing Draining Wounds and Fistulae: New and Established Methods," *Chronic Wound Care*, Chapter 27, pp. 240-246.
Johnson, F.E., An Improved Technique for Skin Graft Placement using a Suction Drain, *Surgery, Gynecology & Obstetrics*, Dec. 1984, 159(6), 584-585.
Kazan Medical Institute Doctors, A Gadget to Bring the Wound Edges Close, 78-79 (in Russian with English translation). Aug. 20, 1985, 4 pages.
KCI, Inc., If It's Not V.A.C. Therapy, It's Not Negative Pressure Wound Therapy, *KCI Brochure*, Jan. 2005, 1-5.
KCI, Inc., Introducing the V.A.C. GranuFoam Silver Dressing, *Flyer*, 2 pages.
KCI, Inc., The V.A.C. System, 2000-2001, Brochure, 2 pages.
KCI, Inc., Vacuum Assisted Closure (VAC) from Wound Healing, *Evidence Note 5, NHS Quality Improvement Scotland*, Nov. 2003, 1 page.
Keen, W.W., Ed., Surgery, Its Principles and Practice, 1919, W. B. Saunders Company, excerpt, p. 56.
Keith, C.F., Wound management Following Head and Neck Surgery, *Nursing Clinics of North America*, Dec. 1979, 14(4) 761-779.
Kennard, H.W., Bier's Hyperaemia, *Brit. Journ. Nurs.*, Mar. 20, 1909, 223.
Khil'Kin, A.M., Use of a Collagen Hemostatic Sponge for the Experimental Closing of the Surface of a Liver Wound (article in Russian), Citation Downloaded from internet http://www.ncbi.nlm.nih.gov Apr. 24, 2006, 1 page.
Kiemele, L.J., et al., Catheter-Based Negative Pressure Wound Therapy: A New Paradigm of Care, *Nursing Home Wound Care consultative Service, Mayo Clinic*, Rochester, MN, 2 pages.
Kim, S.H., et al., Wangensteen Suction Drainage, apparatus in Neurosurgical Practice, *Dept. of Neurosurgery, Yonsei University of College of Medicine*, Seoul, Korea, 1975, 159-160, Abs. (in Korean and Abstract in English).
Kloth, L.C. and J.M. McCulloch, Wound Healing Alternatives in Management, 3rd Ed., Chap. 10, 339-352.
Kordasiewicz, L.M., Abdominal Wound with a Fistula and Large Amount of Drainage Status after Incarcerate Hernia Repair, *J. WOCN*, May/Jun. 2004, 31(3), 150-153.
Kremlin Papers, A Collection of Published Studies Complementing the Research and Innovation of Wound Care, from *Vestnik Khirurgii, BlueSky Publishing, A Div. of BlueSky Medical Group Inc.*, 2004, 17 pages.
Landes, R.R. and I. Melnick, An Improved Suction Device for Draining Wounds, *Arch. Surg.*, May 1972, 104, p. 707.
Landis, E.M. and J.H. Gibbon, Jr., The Effects of Alternate Suction and Pressure on Blood Flow to the Lower Extremities, Alternate Suction and Pressure, pp. 925-961.
Larichev, A.B., Vacuum Therapy of Wounds and Wound Infection, *1st. Ed., BlueSky Publishing*, 2005, 237 pgs.
Lee, J.H. and H.J. Yang, Application of Medifoam B® & Negative Pressure Therapy for the Auxiliary Treatment of Pressure Sore, *Dept. Plastic and Reconstructive Surg., College of Medicine, Eulji Univ.*, Daejeon, Korea, Abs. Sep. 31, 2004, 1 page.
Letsou et al. "Stimulation of Adenylate Cyclase Activity in Cultured Endothelial Cells Subjected to Cyclic Stretch." *Cardiovascular Surgery 3*. Toronto. Sep. 1989, pp. 634-639.
Linden van der, Willem, "Randomized Trial of Drainage After Cholecystectomy," *Modern Operative Techniques*, Voluje 141, Feb. 1981, pp. 289-294.
Lockwood, C.B., Aseptic Surgery, Drainage, *Brit. Journ. Nurs.*, Mar. 26, 1904, 245.
Luchette, F.A., When Should the General Surgeon Leave the Abdomen Open?, Division of Trauma, Surgical Critical Care and Burns, Loyola University Medical Center, Maywood, Illinois., 37 pages.
Lumley, J.S.P., et al., The Physical and bacteriological Properties of Disposable and Non-Disposable Suction Drainage Units in the Laboratory, *Br. J. Surg.*, 1974, 61, 832-837.
Lundvall, J. and T. Lanne, Transmission of Externally applied Negative pressure to the Underlying Tissue: A Study on the Upper Arm of Man, *Acta Physiol. Scand. 1989*, 136, 403-409.
Maddin et al., International Journal of Dermatology, "The Biological Effects of a Pulsed Electrostatic Field with Specific References to Hair: Electrotrichogenesis," vol. 29: 446-450 (1990).
Magee, C., et al., Potentiation of Wound Infection by Surgical Drains, *Amer. Journ. of Surg.*, May 1976, 131, 547-549.
Maitland and Mathieson, Suction Drainage, *Brit. J. Surg*, Mar. 1970, 57(3), 195-197.
Mayo, C.W., The One-Stage Combined Abdominoperineal Resection for Carcinoma of the Rectum, RectoSigmoid and Sigmoid, *Surgical Clinics of North America*, Aug. 1939, *Mayo Clinic Number*, 1011-1012.
McFarlane, R.M., The Use of Continuous Suction under Skin Flaps, *Br. Journ. Plast. Surg.*, 77-86.
McGuire, S., Drainage after Abdominal Section, *Br. Journ. of Nurs.*, Dec. 15, 1903, 447-449.
McLaughlan, James, "Sterile Microenvironment for Postoperative Wound Care," *The Lancet*, Sep. 2, 1978, pp. 503-504.
Medela, Inc., Pleupump MK II, Aug. 14, 2001, Brochure (in German), 12 pages.
Mendez-Eastman, S., Guidelines for Using Negative Pressure Wound Therapy, *Advances in Skin & Wound Care*, 14(6), Nov./Dec. 2001, 314-325.
Mendez-Eastman, S., When Wounds Won't Heal, *RN*, Jan. 1998, 2-7.
Meyer and Schmieden, Bier's Hyperemic Treatment, Fig. 69-70, 557.
Meyer and Schmieden, Bier's Hyperemic Treatment, *Published 1908 W. B. Saunders Company*, 44-65.
Meyer, W. & Schmieden, V., *Bier's Hyperemic Treatment, W B. Saunders Company 1908*, (the entire reference has been submitted, but pp. 44-65 may be the most relevant).
Microtek Heritage, Inc. P.O. Box 2487, Columbus, MS 39704, "Wound-Evac ET," 4 pages.
Miles, W.E., A Method of Performing Abdominoperineal Excision for Carcinoma of the Rectum and of the Terminal Portion of the Pelvic Colon, *The Lancet*, Dec. 19, 1908, 1812-1813.
Miller, M.S. and C. McDaniel, Treating a Pilonidal Cystectomy Abscess Wound with the BlueSky Medical Versatile 1™ Negative Pressure Wound Therapy, *The Wound Healing Center*, Terre Haute, Indiana, Case Study 2004-2006, 1 page.
Miller, M.S., Negative Pressure Wound Therapy: "A Rose by Any Other Name," *Ostomy/Wound Management*, Mar. 2005, 51(3), 44-49.

Milsom, I. and A. Gustafsson, An Evaluation of a Post-Operative Vacuum Drainage System, *Curr. Med. Res. Opin.* (1979), 6, 160-164.
Moloney, G.E., Apposition and Drainage of Large Skin Flaps by Suction, *Australian and New Zealand Journ. of Surg.*, 173-179—1950's.
Morykwas, M.J., et al., Effects of Varying Levels of Subatmospheric Pressure on the Rate of Granulation Tissue Formation in Experimental Wounds in Swine, *Abs., Ann. Plast. Surg. 2001*, 47: 547.
Moserova, J. and E. Houskova, The Healing and Treatment of Skin Defects, 1989, 116-143.
Moss, W., What is Cellulitis? Describe Some Forms of Treatment You Would Expect to be Used for Cellulitis of the Arm, *Brit. Journ. Nurs.*, Nov. 1935, 282.
Mulder, G.D., Ed., et al., Clinicians' Pocket Guide to Chronic Wound Repair, *Wound Healing Publications*, Spartanburg, SC, 1991, 54-55.
Mullner, T., et al., The Use of Negative Pressue to Promote the Healing of Tissue Defects: A Clinical Trial Using the Vacuum Sealing Technique, *Br. J. Plast. Surg.*, Apr. 1997, 51(1), 79, Abs.
Musashaikhov, K.T., et al., The Course of Wound Healing under the Influence of Polyphepan in patients with Diabetes Mellitus, Abstracts, Downloaded from internet, http://www.mediasphera.ru/surgery/97/5/e5-97ref.htm, *Surgery* No. 5, 1997,1 page.
Nakayama, Yoshio, et al., A New Method for Dressing of Free Skin Grafts, New Method for Free Skin Grafting, vol. 86, No. 6 Jun. 12, 1989.
Nakayama, Y., et al., "A New Method for the Dressing of Free Skin Grafts", Plastic and Reconstructive Surgery, Dec. 1990 pp. 1216-1219, UK.
Nakayama et al., "A New Dressing Method for Free Skin Grafting in Hands." *Ann. Plast. Surg.*, 26: 499-502 (1991).
Nasser, A.N., The Use of the Mini-Flap Wound Suction Drain in maxillofacial Surgery, *Annals of the Royal College of Surgeons of England*, 1986, 68, 151-153.
Navsaria, P.H., et al., Temporary Closure of Open Abdominal Wounds by the Modified Sandwich-Vacuum Pack Technique, *Br. Journ. Surg.*, 2003, 90, 718-722.
Nghiem, D.D., A Technique of Catheter insertion for Uncomplicated Peritoneal Dialysis, *Surgery, Gynecology & Obstetrics*, Dec. 1983, 157, 575-576.
Nicholas, J. M. Options for Management of the Open Abdomen, Presentation from Emory University School of Medicine, 66 pgs.
Nightingale, K., Making Sense of wound Drainage, *Nursing time* Jul. 5, 1989, 85(27), 40-42.
Noblett, E.A., What is an Empyema? What Operations are Undertaken for its Relief, and What Have You to Say About the After-Nursing?, *Brit. Journ. Nurs.*, Apr. 29, 1916, 375.
O'Byrne, C., Detection and Management of Postoperative Wound Sepsis, *Nursing Clinics of North American*, Dec. 1979, 14(4), 727-741.
Ohotskii, V.P., et al., Usage of Vacuum Suction During the Primary Surgical Debridement of Open Limb Injuries, *Sovetskaya Medicina*, 1973, January, 8 pages (in Russian with English translation).
Olenius et al., "Mitotic Activity in Expanded Human Skin." *Plastic and Reconstructive Surgery*. Feb. 1993. 213-215.
Ontario, Vacuum Assisted Closure Therapy for Wound Care, Dec. 2004, Toronto, ON, Canada, pp. 1-59.
Ontario Ministry of Health and Long Term Care for the Ontario Health Technology Advisory Committee, "Vacuum Assisted Closure Therapy for Wound Care, Health Technology Literature Review," Dec. 2004, Toronto, Ontario, Canada, pp. 1-57.
Orgill, D. P., et al., Microdeformational Wound Therapy—A New Era in Wound Healing, *Tissue Engin. and Wound Healing Laboratory, Brigham and Women's Hospital, Business Briefing: Global Surgery—Future Direction 2005*, 22.
Orgill, D. et al., Current Concepts and Approaches to Wound Healing, *Critical Care Medicine*, Sep. 1988, 16(9), 899-908.
Orgill, D.P., et al., Guidelines for Treatment of Complex Chest Wounds with Negative Pressure Wound Therapy, *Wounds, A Compendium of Clinical Research and Practice, Suppl. B*, Dec. 2004, 1-23.
Oschsner, A.J., Surgical Diagnosis and Treatment, 1921, 11, 266-269.
Parker, M.J. and C. Roberts, Closed suction Surgical Wound Drainage after Orthopaedic Surgery, *Cochran Database of Systematic Review 2005*, 3, 3 pages.
Parulkar, B.G., et al., Dextranomer Dressing in the Treatment of Infected Wounds and Cutaneous Ulcers, *J. Postgrad. Med.*, 1985, 31(1), 28-33.
Penman, M., What Are the Signs and Symptoms of Gallstones? What Instruments Would You have Ready for the Operation? How Would You Nurse a Case After Operation?, *Brit. Journ. Nurs.*, Aug. 9, 1919, 88.
Pham, C., et al., Vacuum-Assisted Closure for the Management of Wounds: An Accelerated Systematic Review, *Asernip-Accelerated Review of Vacuum Assisted Wound Closure*, Report No. 27, Dec. 2003, 1-52.
"Pleur-evac. Adult-Pediatric, Non-Metered." Code No. A-4000. Control No. F7961J, 1 page.
Precision Medical, Power VAC+ Intermittent Aspirator, http://precisionmedical.com Downloaded from internet Apr. 10, 2006, 2 pages.
Ramirez, O.M., et al., Optimal Wound Healing under Op-Site Dressing, Ideas and Innovations, 73(3), pp. 474-475.
Ranson, John H. M.D., Safer Intraperitoneal Sump Drainage, Surgery Gynnecology and Obstetrics, pp. 841-842, 1973 vol. 137.
Rammensee, H.G., Untersuchung der Lymphozytenin filtrate in Implantierte PVA-Schwämme nach der Therapie infizierter Wunden mit Vakuumversiegelung, Aus dem Interfakulatären Institut für Zellbiologie der Universität Tübingen Abeilung Immunologie Abteilungsleter, 2004, 119 pgs.
Redon, H. and J. Troques, La Fermeture Sous Depression des Plaies Etendues, *Academe de Chirurgie*, Mar. 1954, 304-306. (in French).
Redon, H., Closure of Large Wounds under a Partial Vacuum, Paris, *Notes on Practical Medicine, published under L. Rouques*, 1-3.
Reedy, J., The Science Behind Wound Healing, *UW Health Sciences/UW Medicine News and Community Relations, Winter/Spring 2005*, 4 pages.
Reimann, D., et al., Successful Treatment Due to Vacuum Seal Technique of a Severe Scedosporium Apiospermum Skin Infection in a Renal Transplant Recipient, *Nephrol. Dial. Transplant*, 2004, 19 (1), 245-248.
Richter, Treatment of Inflammatory Conditions of the Skin with Hot Baths, *Brit. Journ. Nurs.*, Aug. 25, 1906, 149.
Roberts, R.H., et al., Randomised Trial of Medinorm LVS and Surgivac Drainage System after Operations for Breast Cancer May 1999, *Amer. Journ. Surg.*, Feb. 1997, 2 pgs.
Rodrigo, J.J., et al., The Effect of Varying Degrees of Suction Pressure on Drainage of Hematomas, *Dept. of Orthopaedic Surgery, University of California, David*, Sacramento, California, 9 pages.
Rosser, C.J., et al., A New Technique to Manage Perineal Wounds, *Infections in Urology*, Mar./Apr. 2000, 4 pgs.
Royle, G.T. and B.J. Britton, Disposable Drains, *Articles of the Royal College of Surgeons of England*, (1984), vol. 66, 1 page.
Russ and Fleischmann, Vakuumversiegelung, List of References (in English and German), 2000, 4 pgs.
Sagi, A., Burn Hazard from Cupping—An Ancient Universal Medication Still in Practice, *burns*, 1988, 14(4), 323-325.
Sames, C.P., Sealing of Wounds with Vacuum Drainage, *Br. Med. Journ.*, Nov. 5, 1977, p. 1223, Correspondence.
Samson, D., et al., Wound-Healing Technologies: Low-Level Laser and Vacuum-Assisted Closure, *Evidence report/Technology Assessment*, No. 111, Dec. 2004, AHRQ Publication No. 05-E005-2, 97 pages.
Sandahl, L., Slides at Geisinger Medical Center, Danville, PA, Apr. 10, 1990, Correspondence, 4 pages.
Schaffer, D.B., Closed Suction Wound Drainage, Nursing 97, Nov., Downloaded from internet www.springnet.com, 62-64, 1997.
Schumann, D., Preoperative Measures to Promote Wound Healing, *Nursing Clinics of North America*, Dec. 1979, 14(4), 683-699.
Scott, F., Babies in Bottles, *Advance for Resp. Care Practitioners*, Nov. 23, 1992, 2 pgs.
Senyutovich, R.V., Napkin Preventing Abdominal Contamination in Performance of Colonic Anastomosis, Abstracts, Downloaded from internet, http://www.mediasphera.ru/surgery/97/1/el-97ref.htm—1997, 1 page.

Shaer, W.D., et al., Inexpensive Vacuum-Assisted Closure Employing a Conventional Disposable Closed-Suction Drainage System, *Plastic and Reconstructive Surgery*, Jan. 2001, 292.
Sheen, A.W., Some Experiences of Shell Wounds in the Present War, (excerpt), *Brit. Journ. Nurs.*, Jan. 16, 1915, 42.
Smith, L.A., et al., Vacuum Pack Technique of Temporary Abdominal Closure: A Four-Year Experience, *Amer. Surg.*, Dec. 1997, 63(12), 1102-1108.
Sparta Instrument Corp. 26602 Corporate Ave., Hayward, CA 94545, "Power Source Multi-Purpose Surgical Aspirator," 1 page.
Stewart, M. F., et al., Cleaning v Healing, *Community Outlook*, Aug. 1985, 22-26.
Surgidyne, Closed Systems for Management of Wound Drainage, Brochure and Catalog, Downloaded from internet, www.sterion.com, 6 pages.
Svedman, P., "A Dressing Allowing Continuous Treatment of a Biosurface," *IRCS Med. Science: Biomed. Tech.; Clinic. Med.; Surg. and Transplantation*, 1979, 7, p. 221.
Svedman, P., et al., "A Dressing System Providing Fluid Supply and Suction Drainage Used for Continuous or Intermittent irrigation," *Annals of Plastic Surgery*, vol. 17, No. 2, Aug. 1986, pp. 125-133.
Swanson, L., Solving Stubborn-Wound problem Could Save Millions, Team Says, *JAMC, 23 FEVR*, 1999: 160(4), p. 556.
Techno Takatsuki Co., Ltd., 8-16 Hatchonishimachi, Takatsuki City, Osaka, Japan, "HiBlow Air Pump," 5 pages.
Tenta, L.T., et al., Suction Drainage of Wounds of the Head and Neck, *Surg. Gyn. & Ob.*, Dec. 1989, 169, p. 558.
Tittel, K. and G. Tolksdorff, Forum: VariDyne—Neue Standard in der Postoperative Wunddrainage (New Standards in Postoperative Wound Drainage), *Unfallchirurgie*, 1988 14(2), 104-107 (in German with English Translation).
Tribble, David E. M.D., "An Improved Sump Drain-Irrigation Device of Simple Construction," *Archives of Surgery New York*, 1972 vol. 105, pp. 511-513.
Urschel, J.D., et al., The Effect of Mechanical Stress on Soft and Hard Tissue Repair; A Review, *Br. Journ. Plast. Surg.*, 1988, 41, 182-186.
U.S. Appl. No. 11/491,578, filed Jul. 24, 2006, Title: Negative Pressure Protection System.
U.S. Appl. No. 11/654,926, filed Jan. 17, 2007, Title: Container and Cover System.
U.S. Appl. No. 11/784,021, filed Apr. 5, 2007, Title: Instructional Medical Treatment System.
Usypov, Y. N. and M.V. Ephfanov, Active Drainage of wounds, Dept. of Hospital Surgery, Army Medical Academy, Leningrad, *Vestnik Chirurgia 1987*, April Edition, 42-45 (in Russian with English translation), 6 pages.
Valenta, A.L., Using the Vacuum Dressing Alternative for Difficult Wounds, *AIN*, Apr. 1994, 44-45.
Van Heurn, L.W.E. and P.R.G. Brink, Prospective Randomized Trial of High versus Low Vacuum Drainage after Axillary Lymphadenectomy, *Br. Journ. Surg. 1995*, 82, 931-932.
Van Way III, C.W., Prevention of Suction-Induced Gastric mucosal damage in Dogs, *Critical Care Medicine*, Aug. 1987, 15(8), 774-777.
Varley, G.W. and S.A. Milner, Wound Drains in Proximal Femoral Fracture Surgery: A Randomized prospective Trial of 177 Patients, *J. R. Coll. Surg. Edinb.*, Dec. 1995, 40, 416-418.
Vijanto, J. and J. Raekallio, Local Hyperalimentation of Open Wounds, *Br. J. Surg.*, 1976, 63, 427-430.
Wackenfors, A., et al., Effects of Vacuum-Assisted Closure Therapy on Inguinal Wound Edge Microvascular Blood Flow, *Wound Rep. Reg*, 2004, 12, 600-606.
Warren, J.C. and A.P. Gould, Ed., The International Text-Book of Surgery, 1902, 1, 70-79.
Waymck, J.P., et al., An Evaluation of Aquaphor Gauze Dressing in Burned children, Abs., 1 page.
Wayne, M.A., Cook Pneumothorax Catheter Set, Wayne Pneumothorax Catheter Set, *Cook Critical Care, Cook Incorporated 1997*, 3 pgs.
Wells Johnson Company, 2045 N. Forbes Blvd., Suite 106, Tuscon, AZ. "Point 5 Aspirator," 1 page.
Westaby, S., Wound Care No. 11, *Nursing Times*, Jul. 21, 1982, 41-48.
White, R.A., et al., Vacuum-Assisted Closure Complicated by Erosion and Hemorrhage of the Anterior Tibial Artery, *Journal of Orthopaedic Trauma*, Jan. 2005, 19(1), 56-59, Abs. Cited in BlueSky internal email dtd. Nov. 9, 2005.
Williams, et al., Survey of the Use of Suction Drains in head and Neck Surgery and Analysis of Their Biomechanical Properties, *J. Otolaryngol.*, Feb. 2003, 32(1), 16-22, Abs. Downloaded from internet Nov. 30, 2003.
Windows on Medical Technology, Vacuum-Assisted Wound Closure for Chronic and Acute Wounds, *ECRI Health Technology Assessment Information Service*, Oct. 2000, 38, 1-21.
Witkowski, J.A. and Parish, L.C., Synthetic Dressings: Wound Healing in the '80s, *Hospital Therapy*, Nov. 1986, 75-84.
Wooding-Scott, et al, "No Wound is Too Big for Resourceful Nurses," RN, Dec. 1988, pp. 22-25, USA.
Worth, M.H. and H.W. Andersen, The Effectiveness of Bacterial Filtration in Vented Wound Drains, *Journ. of Surg. Research*, 1979, 27, 405-407.
Wu, P., et al., In Vitro Assessment of Water Vapour Transmission of Synthetic Wound Dressings, *Biomaterials*, 1995, 16(3), 171-175.
Wu, W.S., et al. Vacuum therapy as an intermediate phase in wound closure: a clinical experience, *Eur J Past Surg* (2000) 23: 174-177.
Wysocki et al., "Wound Fluid form Chronic Leg Ulcers Contains Elevated Levels of Metalloproteinases MMP-2 and MMP-9." *The Society for Investigative Dermatology, Inc.* Jul. 1993, 64-68.
Yukhtin, V.I., et al., Surgical Treatment of Purulent Diseases of Soft tissues and Bones with the Use of Drainage-Bathing System, Content, Downloaded from internet, http://www.mediasphera.ru/surgery/97/9/e9-97ref.htm, *Surgery* No. 9 1997, 1 page.
Zhetimkarimov, D.S. and V.K. Ostrovsky, The Applied Significance of Anatomic Pecularities of Greater Momentum, Contents, Downloaded from internet http://www.mediasphera.ru/surgery/97/6/e6-97ref.htm, *Surgery* No. 6, 1997, 1 page.
Chariker, M.E., et al, "Effective Management of Incisional and Cutaneous Fistulae with Closed Suction Wound Drainage," Contemporary Surgery. Jun. 1989, pp. 59-63, vol. 34 USA.
Biblehimer, Helen L., "Dealing With a Wound that Drains 1.5 Liters a Day," RN, Aug. 1986, pp. 21-23, USA.
Wooding-Scott, Margaret, et.al, "No Wound is Too Big for Resourceful Nurses," RN, Dec. 1988, pp. 22-25, USA.
Garcia-Renaldi, Raul, et al, "Improving the Eficiency of Wound Drainage Catheters," Journal of Surgery (?), Sep. 1975, pp. 372-373, vol. 130.
Schwab, Peter M. and Kelly, Keith A., "Primary closure of the Perineal Wound After Proctectomy," Mayo Clinic Proc., Mar. 1974, pp. 176-179, vol. 49, USA.
Ramirez, Oscar M., et al, "Optimal Wound Healing Under Op-Site Dressing," pp. 474-475, vol. 73, No. 3.
Raffl, Arthur B., "Use of Negative Pressure Under Skin Flaps After Radical Mastectomy," Dept. of Surgery, State Univ. of N.Y., College of Medicine Syracuse, NY, Submitted for publication Apr. 1953, p. 1048, USA.
Knight, Marie Ray, A Second Skin for Patients with Large Draining Wounds, Nursing, Jan. 1976, p. 37, USA.
Finley, John M.,"Practical Wound Management," pp. 45, 127, 143, 149, 207.
Spengler, Michael D., el al, "Performance of Filtered Sump Wound Drainage Tubes", Surgery, Gynecology & Obstetrics, Mar. 1982, pp. 333-336, vol. 54, USA.
Kohlman, Phyllis A., et al, "Pouching Procedure to Collect Drainage From Around a Biliary Drainage Catheter," Ostomy/Wound Management, Nov./Dec. 1991, pp. 47-50, vol. 37.
Alper, Joseph, C., "Recent Advances in Moist Wound Healing," Southern Medical Journal, Nov. 1988, pp. 1398-1404, vol. 79, No. 11 USA.
Reid, Daniel P., "Information on Cupping or using suction Cups on Wounds for healing purposes", From Chinese Herbal Medicine.
Taylor, Virginia, Meeting the Challenge of Fistulas & Draining Wounds, Nursing, Jun. 1980, pp. 45-51, USA.
"General Characteristics of Wound Healing and Russian Classificaiton of Wound Healing Process,".

Davydov, Yu. A., et al, Article in Russian (?): Abstract in English: "Vacuum Therapy in the Treatment Purulent Lactation Mastitis" pp. 66-70.
Davydov, Yu. A., et al, Article in Russian (?): Abstract in English: "The Bacteriological and Cytological Assessment of Vacuum Therapy of Purulent Wounds", pp. 48-52.
Article 3, Article in Russian (?), 1991, pp. 126-128.
Article 4, Article in Russian (?), 1991, pp. 132-135.
Alexander, J. Wesley, "Prevention of Wound Infections," The American Journal of Surgery, Jul. 1976, pp. 59-63, vol. 132, USA.
Sheppard, M.D., "Sealed Drainage of Wounds", The Lancet, Jun. 14, 1952, pp. 1174-1176.
Putney F. Johnson, "The Use of Continuous Negative Pressure after Laryngectomy and Radical Neck Dissection", Surgery, Gynecology & Obstetrics, Aug. 1956, pp. 244-246, USA.
Brummelkamp, W.H., et al, "High-vacuum drainage and primary perineal wound closure in abdominoperineal excision of the rectum", The Netherlands Journal of Surgery, 1991 pp. 236-238, Netherlands.
Miles, W. Ernest, "Technique of the Radical, Operation for Cancer of the Rectum", The British Journal of Surgey, pp. 292-304, United Kingdom.
Unknown, "Wound Suction", Nursing, Oct. 1975, pp. 52-53, USA.
Brubacher, Lynda L., "To Heal a Draining Wound", RN, Mar. 1982, pp. 30-35, USA.
Betancourt, Sergio, "A Method of Collecting the Effluent from Complicated Fistual of the Small Intestine," Dept. of Surgery, Allegheny General Hospital, Pittsburgh, p. 375, USA.
Wolthuis, Roger A., et al, "Physiological Effects of Locally Applied Reduced Pressure in Man," Physiological Reviews, Jul. 1974, pp. 566-595 vol. 54, No. 3, USA.
Zamierowski, David S., Letter:"All Foam Sponges are not Equal in Vacuum Dressings," British Journal of Plastic Surgery, 1999, 52, 78-81, p. 79, United Kingdom.
Spahn, Slide presented at the WOCN meeting in Ontario, California, Sep. 2001.
Unknown, "The RN Magazine/University of California Continuing Education Curriculum; Examination on 'To heal a draining wound'", RN, Mar. 1982, p. 36, USA.
Unknown, Medela product information in English Summary: "Pieupump MK II is the new micro-data controlled thoracic drainage".

* cited by examiner

FIG. 1

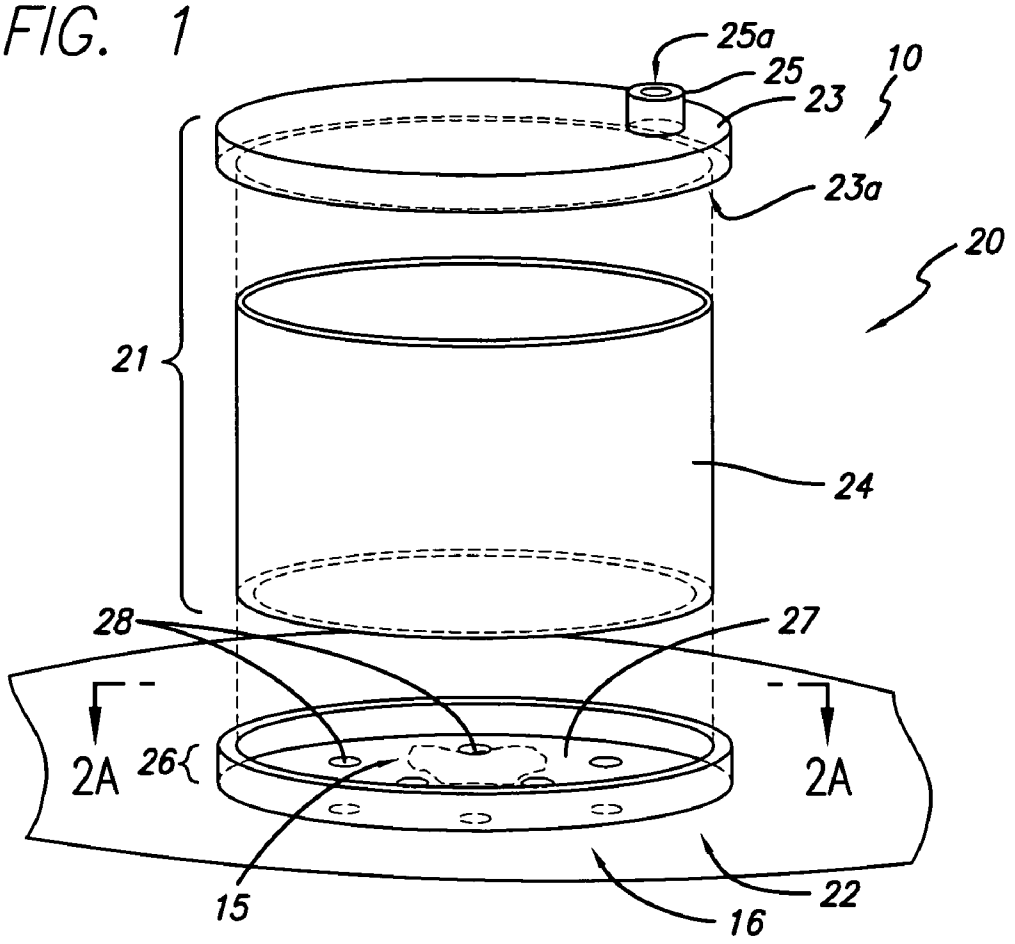

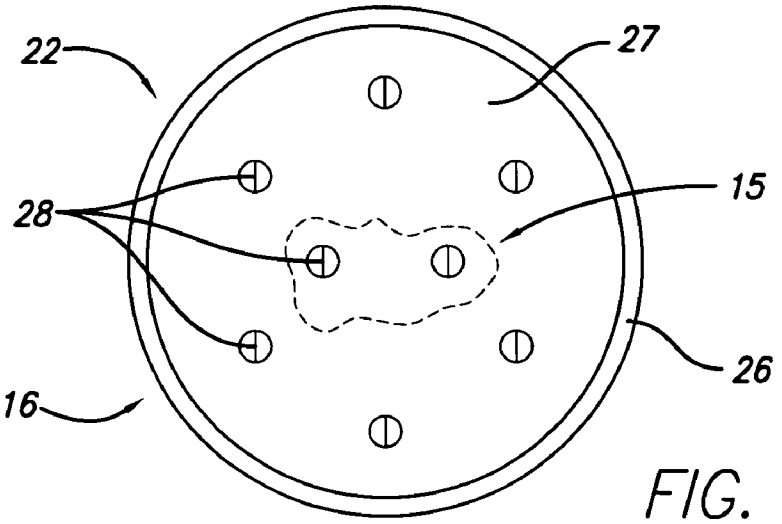

FIG. 2A

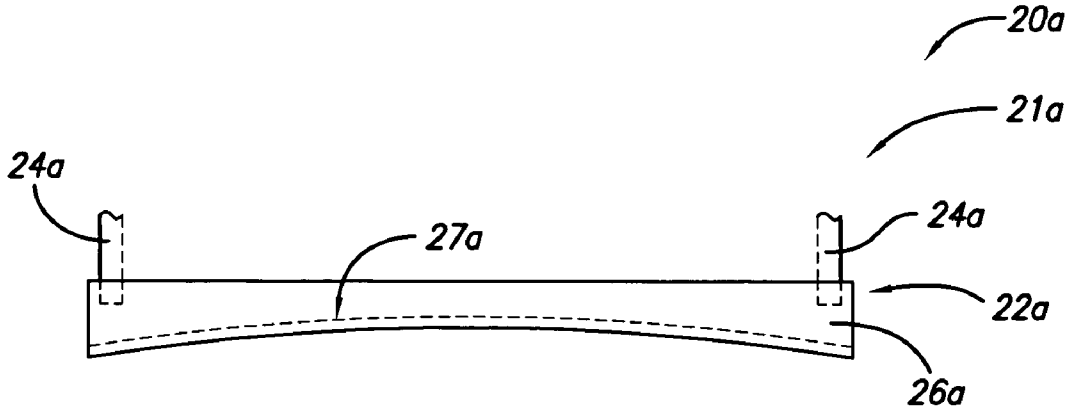

FIG. 2B

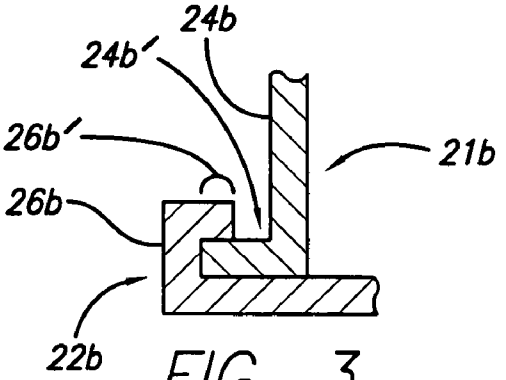

FIG. 3

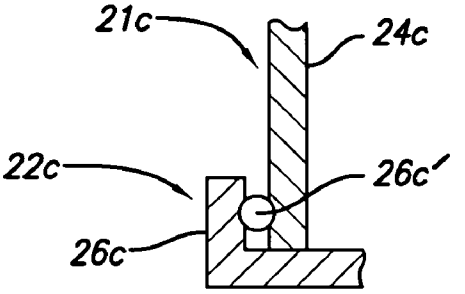

FIG. 4

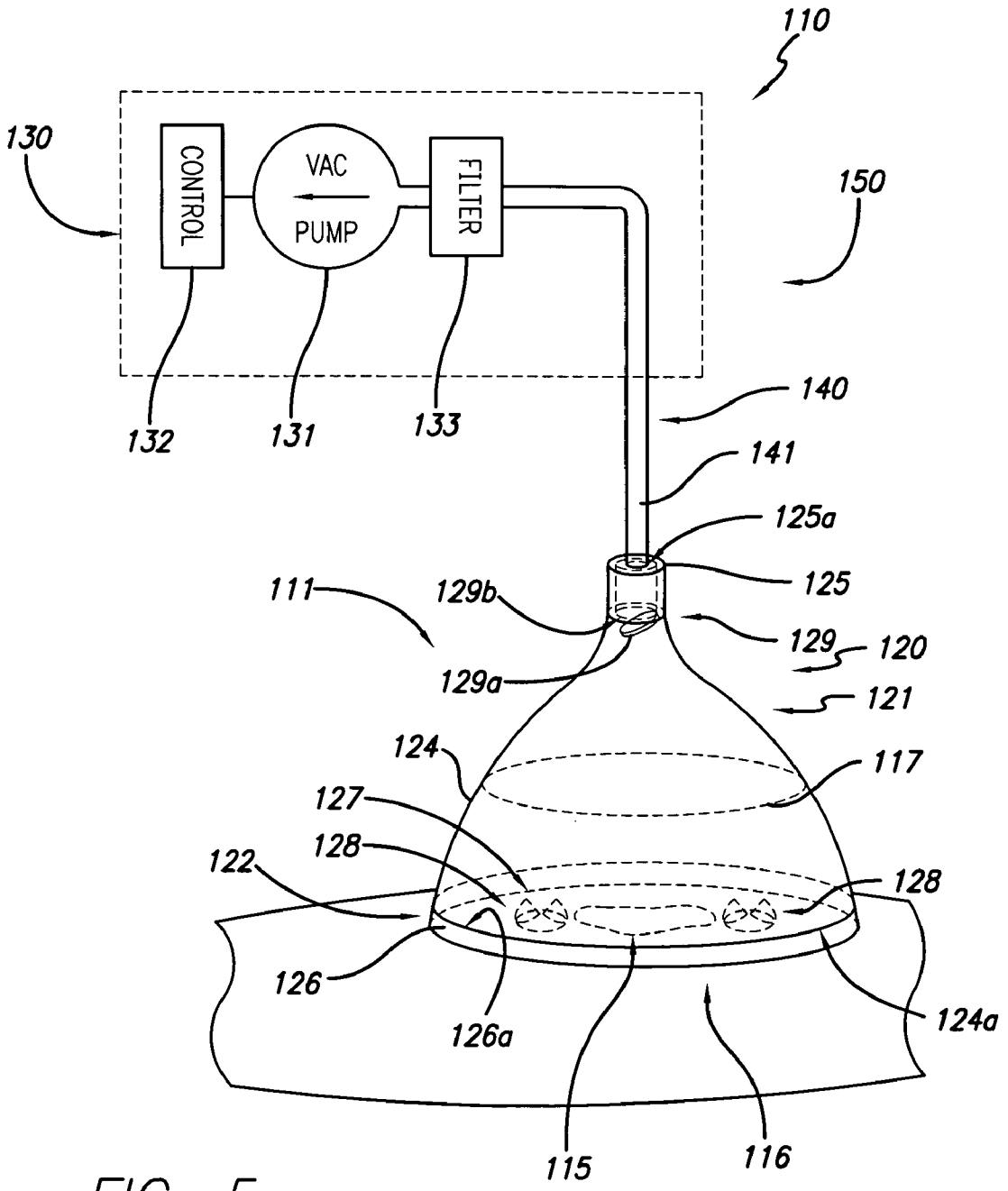
110
130
CONTROL
VAC
PUMP
FILTER
150
132
131
133
140
141
125a
125
111
129b
129
120
129a
121
124
117
127
128
122
128
126
126a
124a
115
116

FIG. 5

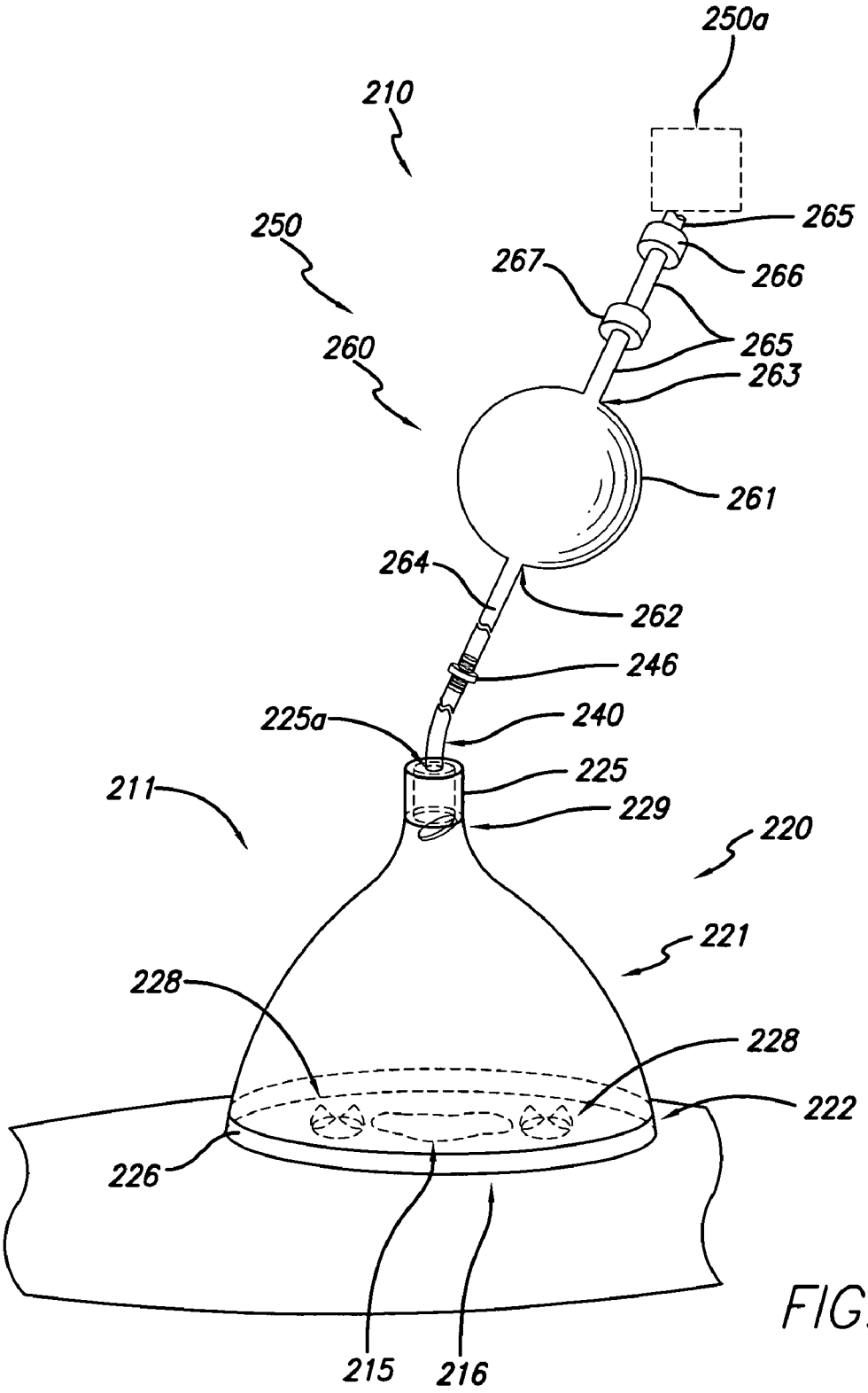
250a
210
265
250
267
266
260
265
263
261
264
262
246
225a
240
225
211
229
220
221
228
228
222
226
215
216

FIG. 6

REDUCED PRESSURE WOUND CUPPING TREATMENT SYSTEM

CROSS REFERENCES TO OTHER APPLICATIONS

This application claims the benefit of U.S. provisional application No. 60/559,727, filed on Apr. 5, 2004. The full disclosure of this provisional application is incorporated herein by reference.

BACKGROUND

The present invention generally relates to treatment of wounds, and more specifically to improved apparatus and methods for treating a wound on a patient's body by applying reduced pressure to the body at the site of the wound. In this context, the term "wound" is to be interpreted broadly, to include any wound that may be treated using reduced pressure.

The treatment of open or chronic wounds that are too large to spontaneously close or otherwise fail to heal by means of applying reduced pressure to the site of the wound is well known in the art. One such system is disclosed in U.S. patent application Ser. No. 10/652,100, which was filed with the U.S. Patent and Trademark Office on Aug. 28, 2003. The disclosure of this U.S. patent application is incorporated herein by reference. Another system is disclosed in U.S. patent application Ser. No. 11/026,733, entitled "Improved Reduced Pressure Wound Treatment Appliance," which was filed with the U.S. Patent and Trademark Office on Dec. 30, 2004. The disclosure of this U.S. patent application is also incorporated herein by reference. Yet another system is disclosed in U.S. patent application Ser. No. 11/064,813, entitled "Improved Flexible Reduced Pressure Wound Treatment Appliance," which was filed with the U.S. Patent and Trademark Office on Feb. 24, 2005. The disclosure of this U.S. patent application is also incorporated herein by reference.

Reduced pressure wound treatment systems currently known in the art commonly involve placing a treatment device that is impermeable to liquids over the wound, using various means to seal the treatment device to the tissue of the patient surrounding the wound, and connecting a source of reduced pressure (such as a vacuum pump) to the treatment device in a manner so that an area of reduced pressure is created under the treatment device in the area of the wound. The systems also typically act to remove exudate that may be aspirated from the wound. Thus, such systems also typically have a separate collection device located between the reduced pressure source and the treatment device to collect. This collection device represents a separate source of expense in reduced pressure wound treatment. In addition, it is advantageous in some circumstances to remove exudate from the wound so that the exudate does not remain in the presence of the wound. For example, healing of the wound may be enhanced by the removal of exudate from the wound in some circumstances. In yet other cases, it may be advantageous to be able to gain physical access to the wound without having to remove the treatment device from the body surrounding the wound. For example, it may be desirable to monitor or treat the condition of the wound during the treatment process. If the treatment device is sealed to the body using an adhesive tape, removing the adhesive tape to monitor or treat the wound may cause discomfort and pain for the patient.

Therefore, there is a need for a wound treatment device that can eliminate the requirement for a separate collection device to collect exudate from the wound. This type of device could

reduce the expense involved in wound treatment by eliminating the need for the collection device. There is also a need for such a treatment device to remove exudate from the presence of the wound to aid in wound healing. It may also be desirable for this type of treatment device to be disposable in certain circumstances. Further, there is a need for a treatment device that would allow for physical access to the wound without the need for removing the treatment device from the body. This type of device could enhance patient comfort. In addition, where the access is simple and quickly obtained, it could also decrease the cost of wound treatment by reducing the time required of healthcare practitioners to be involved in wound treatment. Finally, there is also a need for a reduced pressure treatment system that is relatively inexpensive, while meeting the needs described above.

SUMMARY

The present invention is directed to reduced pressure treatment appliances and methods that satisfy the needs described above. As described in greater detail below, they have many advantages over existing reduced pressure treatment apparatus and methods when used for their intended purpose, as well as novel features that result in new reduced pressure treatment appliances and methods that are not anticipated, rendered obvious, suggested, or even implied by any of the prior art apparatus or methods, either alone or in any combination thereof.

In accordance with the present invention, a treatment appliance is provided for treating a wound on a body by applying reduced pressure (i.e., pressure that is below ambient atmospheric pressure) to the wound in a controlled manner for a selected time period in a manner that overcomes the disadvantages of currently existing apparatus. For example, the application of reduced pressure to a wound provides such benefits as faster healing, increased formation of granulation tissue, closure of chronic open wounds, reduction of bacterial density within wounds, inhibition of burn penetration, and enhancement of flap and graft attachment. Wounds that have exhibited positive response to treatment by the application of negative pressure include infected open wounds, decubitus ulcers, dehisced incisions, partial thickness burns, and various lesions to which flaps or grafts have been attached.

In one embodiment of a first version of the present invention, an appliance for treating a wound on a body is comprised of a cover, sealing means to seal the cover to the body, which are described in more detail below, and reduced pressure supply means, which are also described in more detail below. The cover, which is sized to be placed over and enclose the wound, is further comprised of a top cup member, an interface member, and interface attachment means for removably attaching the top cup member to the interface member. The interface member is further comprised of flow control means that permit exudate from the wound to flow from the wound into the top cup member, but not in the opposite direction. Thus, in this embodiment, the interface member is sealed to the body by the sealing means and exudate from the wound flows from the wound through the flow control means in the interface member into the volume of the cover above the interface member. The flow control means do not allow the exudate to flow back into the area of the wound under the interface member. The cover and the sealing means allow reduced pressure to be maintained in the volume under the cover at the site of the wound. The reduced pressure supply means operably connect the cover to a reduced pressure supply source that provides a supply of reduced pressure to the

cover, so that the volume under the cover at the site of the wound is supplied with reduced pressure by the reduced pressure supply source.

In some embodiments of this first version of the present invention, the cover may be approximately cylindrical in shape. In other embodiments, the cover may be approximately cup-shaped. In some embodiments, the sealing means may be comprised of the suction of the interface member against the body, such suction being produced by the presence of reduced pressure in the volume under the cover at the site of the wound. In still other embodiments, the top cup member and the interface member are each comprised of materials from the group consisting of semi-rigid materials, rigid materials, and combinations of such materials. Further, in some embodiments, the interface member is further comprised of a membrane portion that is disposed approximately adjacent to the body and the flow control means is comprised of at least one one-way valve operably disposed in the membrane portion. In other embodiments, the interface member may be further comprised of a membrane portion that is disposed approximately adjacent to the body and that permits fluid to flow in only one direction, and the flow control means is comprised of all or a portion of the membrane. In some embodiments of this first version of the present invention, the interface attachment means may be comprised of an o-ring seal or a magnetic seal. In other embodiments, a portion of the interface member may be of a size and shape adapted to fit tightly against a portion of the top cup member, wherein an operable seal (described in more detail below) is created between the interface member and the top cup member. In yet other embodiments, the sealing means may be comprised of an adhesive that is disposed between a portion of the cover and the portion of the body adjacent to said portion of the cover. In still other embodiments, the sealing means may be comprised of an adhesive tape that is disposed over a portion of the cover and the portion of the body adjacent to said portion of the cover. In other embodiments, the top cup member is further comprised of a port and flow shutoff means operably connected to the port, wherein the flow shutoff means halt or inhibit the supply of reduced pressure to the cover when the level of exudate under the cover at the site of the wound reaches a predetermined level. In yet other embodiments, the interface attachment means does not provide for removal of the top cup member from the interface member.

In some embodiments of this first version of the present invention, the top cup member of the cover may be further comprised of a lid member, a cup body member, and lid attachment means to removably attach the lid member to the cup body member. In some of these embodiments, the cover is approximately cylindrical in shape. In other embodiments, the interface attachment means provides for removable attachment of the top cup member to the interface member, but does not provide for permanent attachment of the top cup member to the interface member. In some of these embodiments, the interface attachment means may be comprised of an o-ring seal or a magnetic seal. In other embodiments, a portion of the interface member may be of a size and shape adapted to fit tightly against a portion of the top cup member, wherein an operable seal is created between the interface member and the top cup member. In still other embodiments, the interface attachment means provides for permanent attachment of the top cup member to the interface member, but does not provide for removable attachment of the top cup member to the interface member. In yet other embodiments, the lid attachment means may be comprised of an o-ring seal or a magnetic seal. In other embodiments, a portion of the lid member is of a size and shape adapted to fit tightly against a portion of the cup body member, wherein an operable seal is created between the lid member and the cup body member.

In other embodiments of this first version of the present invention, the cover is comprised of a lid member, a cup body member, and lid attachment means to removably attach the lid member to the cup body member. In these embodiments, the cover is sized to be placed over and enclose the wound and adapted to maintain reduced pressure in the volume under the cover at the site of the wound. Also in these embodiments, the sealing means, which are described in more detail below, are used to seal the cup body member of the cover to the body so that reduced pressure may be maintained in the volume under the cover at the site of the wound. Reduced pressure supply means operably connect the cover to a reduced pressure supply source, which provides a supply of reduced pressure to the cover so that the volume under the cover at the site of the wound is supplied with reduced pressure by the reduced pressure supply source. In some of these embodiments, the lid attachment means may be comprised of an o-ring seal or a magnetic seal. In other embodiments, a portion of the lid member is of a size and shape adapted to fit tightly against a portion of the cup body member, wherein an operable seal is created between the lid member and the cup body member. In some of these embodiments, a portion of the lid member is approximately cylindrical in shape and a portion of the cup body member is approximately cylindrical in shape and said portions have threads and means to receive threads, so that when such portions are screwed together an operable seal is created between the lid member and the cup body member.

In a second version of the present invention, an appliance for administering reduced pressure treatment to a wound on a body is comprised of a treatment device and a vacuum system. In various embodiments of this second version of the invention, the treatment device is also comprised of a cover and sealing means, which may have substantially the same structure, features, characteristics and operation as the cover and sealing means, respectively, described above in connection with the first version of the present invention. In this second version of the invention, the vacuum system is further comprised of a reduced pressure supply source that provides a supply of reduced pressure and reduced pressure supply means (which are described in more detail below) to operably connect the treatment device to the reduced pressure supply source, so that the volume under the treatment device at the site of the wound is supplied with reduced pressure by the reduced pressure supply source. In various embodiments of this second version of the invention, the reduced pressure supply means may generally have substantially the same structure, features, characteristics and operation as the reduced pressure supply means described above in connection with the first version of the invention.

In some embodiments of this second version of the invention, the reduced pressure supply source is comprised of a vacuum pump. In some of these embodiments, the reduced pressure supply source further comprises a control system for the vacuum pump, wherein the control system may control at least the level of suction produced by the vacuum pump or the rate of fluid flow produced by the vacuum pump, or any combination of rate of suction and rate of fluid flow of the vacuum pump. In other embodiments, the reduced pressure supply source further comprises a filter operably positioned between the vacuum pump and the reduced pressure supply means. In these embodiments, the filter prevents the venting of and contamination of the vacuum pump by micro-organisms or fluids (or both) aspirated from the wound. In yet other embodiments, the vacuum pump is comprised of a portable

vacuum pump. In still other embodiments of this second version of the invention, the reduced pressure supply means is comprised of flexible tubing. In other embodiments, the cover is further comprised of a port and flow shutoff means, wherein the flow shutoff means halts or inhibits the application of reduced pressure to the cover when exudate from the wound reaches a predetermined level within the cover. In yet other embodiments of this second version of the invention, the reduced pressure under the cover at the site of the wound is in the range from approximately 20 mm of Hg below atmospheric pressure to approximately 125 mm of Hg below atmospheric pressure. In other embodiments, the reduced pressure is applied in a cyclic nature, the cyclic nature providing alternating time periods of application of reduced pressure and without application of reduced pressure.

In a third version of the present invention, an appliance for administering reduced pressure treatment to a wound on a body is comprised of a treatment device and a vacuum system. In various embodiments of this third version of the invention, the treatment device is also comprised of a cover and sealing means, which may have substantially the same structure, features, characteristics and operation as the cover and sealing means, respectively, described above in connection with the first and second versions of the present invention. In the various embodiments of this third version of the invention, the vacuum system is comprised of a suction bulb, which may (but not necessarily) provide a source of reduced pressure, and reduced pressure supply means, which are described in more detail below, to operably connect the cover to the suction bulb, so that the site of the wound in the volume under the cover may be supplied with reduced pressure by the suction bulb. In some embodiments of this third version of the invention, the suction bulb is further comprised of an inlet port and an outlet port, wherein the inlet port is operably connected to the reduced pressure supply means, and the vacuum system further comprises an exhaust tubing member operably connected to the outlet port. In some of these embodiments, the vacuum system further comprises an exhaust control valve operably connected to the exhaust tubing member. In other embodiments, the vacuum system is further comprised of a filter operably connected to the exhaust tubing member, which prevents the venting of micro-organisms or fluids (or both) aspirated from the wound. In yet other embodiments, the vacuum system is further comprised of a supplemental vacuum system that is operably connected to the exhaust tubing member. In these embodiments, the supplemental vacuum system may generally have substantially the same structure, features, characteristics and operation as the vacuum system described above in connection with the second version of the invention.

A fourth version of the present invention discloses a method of treating a wound. In one embodiment of this fourth version of the invention, the method comprises the following steps. First, a cover is positioned on the body over the wound, wherein the cover may have substantially the same structure, features, characteristics and operation as the embodiments of the cover described above in connection with the first, second and third versions of the invention. Second, the cover is operably sealed to the body so that reduced pressure may be maintained in the volume under the cover at the site of the wound. Third, the cover is operably connected with a vacuum system for producing reduced pressure in the volume under the cover at the site of the wound. Fourth, the reduced pressure is maintained until the wound has progressed toward a selected stage of healing. In other embodiments of this fourth version of the invention, the vacuum system is comprised of a suction bulb and the method further comprises the step of squeezing the suction bulb to reduce its volume and then releasing the suction bulb, so that reduced pressure is produced in the volume under the cover at the site of the wound. In other embodiments of this fourth version of the invention, the reduced pressure under the cover at the site of the wound is in the range from approximately 20 mm of Hg below atmospheric pressure to approximately 125 mm of Hg below atmospheric pressure. In still other embodiments of this fifth version of the invention, the reduced pressure is applied in a cyclic nature, the cyclic nature providing alternating time periods of application of reduced pressure and without application of reduced pressure. In other embodiments, the cover is further comprised of a lid member, a cup body member, and lid attachment means to removably attach the lid member to the cup body member, and the method further comprises the steps of halting the application of reduced pressure to the cover, removing the lid member from the cup body member, and attending to the wound. In some of these embodiments, the method further comprises the steps of re-attaching the lid member to the cup body member after attending to the wound and then reapplying reduced pressure to the volume under the cover in the area of the wound. In still other embodiments of this fourth version of the invention, the top cup member further comprises a port and flow shutoff means operably connected to the port, wherein the flow shutoff means halts or hinders the supply of reduced pressure to the volume under the cover in the area of the wound when the level of exudate within the cover reaches a predetermined level. In these embodiments, the method may further comprise the steps of monitoring the level of exudate aspirated from the wound that accumulates within the volume of the cover and removing the cover from the body when the level of exudate aspirated from the wound causes the flow shutoff means to halt or hinder the supply of reduced pressure to the volume under the cover in the area of the wound. It is to be noted that in various other embodiments the steps described above may be performed in a different order than that presented.

The present invention therefore meets the needs discussed above in the Background section. For example, some embodiments of the present invention can eliminate the requirement for a separate collection device to collect exudate from the wound because the exudate is collected and retained within the volume under the cover. In these embodiments, the interface member is sealed to the body by the sealing means and exudate from the wound flows from the wound through the flow control means in the interface member into the volume of the cover above the interface member. The flow control means do not allow the exudate to flow back into the area of the wound under the interface member. Thus, this type of device could reduce the expense involved in wound treatment by eliminating the need for the collection device. This treatment device also removes exudate from the presence of the wound to aid in wound healing. It is also possible for this type of treatment device to be disposable. Further, some embodiments of the treatment device allow for physical access to the wound without the need for removing the treatment device from the body. In these embodiments, the lid member may be removed from the cup body member of the cover, exposing the area of the wound if an interface member is not utilized. This embodiment of the device could enhance patient comfort because it would not be necessary to remove the sealing means to access the wound. In addition, because access is simple and quickly obtained, the present invention may also decrease the cost of wound treatment by reducing the time required of healthcare practitioners to be involved in wound treatment. The present invention should also be relatively inexpensive to produce, while meeting the needs described

above. Finally, as can be observed from the foregoing discussion, the present invention has great flexiblity. In various embodiments, it may be used with or without the interface member, as well as with or without the removable lid feature.

There has thus been outlined, rather broadly, the more primary features of the present invention. There are additional features that are also included in the various embodiments of the invention that are described hereinafter and that form the subject matter of the claims appended hereto. In this respect, it is to be understood that the invention is not limited in its application to the details of construction and to the arrangements of the components set forth in the following description or illustrated in the following drawings. This invention may be embodied in the form illustrated in the accompanying drawings, but the drawings are illustrative only and changes may be made in the specific construction illustrated and described within the scope of the appended claims. The invention is capable of other embodiments and of being practiced and carried out in various ways. Also, it is to be understood that the phraseology and terminology employed herein are for the purpose of the description and should not be regarded as limiting.

BRIEF DESCRIPTION OF THE DRAWINGS

The foregoing summary, as well as the following detailed description of the preferred embodiments of the present invention, will be better understood when read in conjunction with the appended drawings, in which:

FIG. **1** is an exploded perspective view of an embodiment of a cover comprising the present invention, as such cover would appear from above the body of a patient while the cover is positioned on the body;

FIG. **2**A is an plan view of the interface member of the embodiment of the cover illustrated in FIG. **1**, as taken along the lines **2**A-**2**A of FIG. **1**;

FIG. **2**B is an elevation view of another embodiment of an interface member;

FIG. **3** is an enlarged cross-sectional elevation view of one embodiment of the interface attachment means comprising the present invention;

FIG. **4** is an enlarged cross-sectional elevation view of another embodiment of the interface attachment means comprising the present invention;

FIG. **5** is a view of an embodiment of a treatment appliance comprising the present invention, in which an embodiment of a treatment device, shown in perspective view, is placed over a wound on a body, and in which an embodiment of a vacuum system, depicted generally and shown in schematic elevation view, provides reduced pressure within the volume under a cover comprising the treatment device;

FIG. **6** is a view of an embodiment of a treatment appliance comprising the present invention, in which an embodiment of a treatment device, shown in perspective view from the side of and above the treatment device, is positioned over a wound on a body, and in which an embodiment of a vacuum system, shown in elevational view, provides reduced pressure within the volume under a cover comprising the treatment device.

DETAILED DESCRIPTION

In accordance with the present invention, a wound treatment appliance is provided for treating a wound by applying reduced pressure (i.e., pressure that is below ambient atmospheric pressure) to the wound in a controlled manner for a selected time period in a manner that overcomes the disadvantages of currently existing apparatus. One embodiment of a first version of the invention is the treatment appliance **10** illustrated in FIG. **1**. FIG. **1** is an exploded perspective view of a cover **20** comprising the treatment appliance **10** from the side of and above the cover **20** as it appears when applied to a portion of the body **16** of a patient surrounding a wound **15**. In this embodiment, the cover **20** is comprised of a top cup member **21**, an interface member **22**, and interface attachment means, which are described in more detail below, to attach the interface member **22** to the top cup member **21**. This embodiment also comprises sealing means to seal the cover **20** to the portion of the body **16** surrounding the wound **15**, which are described in more detail below, and reduced pressure supply means (not illustrated), which are also described in more detail below. The cover **20** is generally sized to be placed over and enclose the wound **15** to be treated. The cover **20** and the sealing means (described in more detail below) allow reduced pressure to be maintained in the volume under the cover **20** at the site of the wound **15** to be treated, as described in more detail below. The reduced pressure supply means are used to operably connect the cover **20** to a reduced pressure supply source (also not illustrated) in a manner so that the reduced pressure supply source provides a supply of reduced pressure to the cover **20**, so that the volume under the cover **20** at the site of the wound may be maintained at reduced pressure. It is to be noted, however, that in other embodiments of the present invention, the top cup member **21** may be used for treatment of a wound **15** without the interface member **22**. In these embodiments, the top cup member **21** alone is placed over the wound **15** and reduced pressure is applied to the volume under the top cup member **21**.

The embodiment of the top cup member **21** of the cover **20** illustrated in FIG. **1** is further comprised of a lid member **23** and a cup body member **24**. In this embodiment, the lid member **23** is removably or permanently attached to the cup body member **24** using lid attachment means, which may be substantially the same as any of the interface attachment means, which are described in more detail below. While the lid member **23** is attached to the cup body member **24**, the lid attachment means provides a gas-tight and liquid-tight seal so that reduced pressure may be maintained in the volume under the cover **20** in the area of the wound **15**. In the embodiment illustrated in FIG. **1**, the top cup member **21** is approximately cylindrical in shape. In other embodiments of this first version of the present invention, the top cup member **21** may be of almost any shape or combination of shapes, as long as the open end **23***a* of the lid member **23** is of a size and shape adapted to fit against a portion of the surface of the cup body member **24** in a manner so that an airtight and liquid-tight seal can be maintained by the use of the lid attachment means, as described in more detail below. For example, as illustrated in FIG. **5**, the top cup member **121** of the cover **120** may be approximately cup-shaped, having an interface member **122** disposed on its bottom surface. As other examples, the cover **20**, **120** may be cubical, spherical, spheroidal, hexahedral, polyhedral, or arcuate in shape, or may be comprised of any combination of such shapes, in other embodiments. Thus, referring again to FIG. **1** as an example, the lid member **23** may also be shaped approximately as a hemisphere or a cone in other embodiments. As another example, in yet other embodiments, the cup body member **24** and the open end **23***a* of the lid member **23** may have a cross-section of approximately elliptical, square, rectangular, polygonal, arcuate or other shape or combination of all such shapes. The preferred shape and size of the top cup member **21**, **121**, as well as the size and shape of any lid member **23** comprising it, are dependent upon the materials comprising the cover **20**, **120**, the thickness of the cover **20**, **120**, the nature of the wound to be

treated, the size, shape and contour of the portion of the body to be covered by the cover **20**, **120**, the magnitude of the reduced pressure to be maintained under the cover **20**, **120**, the size, shape and other aspects of the interface portion **22**, **122**, the individual preferences of the user of the cover **20**, **120**, and other factors related to access to the wound **15**, the sealing means, and the reduced pressure supply means, as described in more detail below.

In the embodiment of the cover **20** illustrated in FIG. **1**, the lid member **23** may be detached from the cup body member **24**. This allows the user of the appliance **10** to have access to the area of the wound **15** without having to break the sealing means used to operably seal the cover **20** to the portion of the body **16** surrounding the wound **15**. The ability to access the wound **15** in this manner results in more efficient use of the time of healthcare practitioners and less discomfort to patients. It is to be noted that in other embodiments, the lid member **23** and the cup body member **24** may be permanently attached together or may be formed as a single piece. For example, the top cup member **121** of the cover **120** of FIG. **5** does not have a detachable lid member, but is instead formed as a single piece. In these embodiments, and referring to the cover **20** of FIG. **1** as an example, the lid member **23** and the cup body member **24** may be fabricated as a single piece, such as by injection molding, or they may be attached together by any appropriate means, such as by welding, fusing, adhesives, glues, bolts, screws, pins, rivets, clamps, or other fasteners or means or combinations of all such means. In the embodiment of the present invention illustrated in FIG. **1**, the lid member **23** and the cup body member **24** are each constructed of a material that is rigid enough to support the cover **20** away from the wound **15**. Thus, the lid member **23** and the cup body member **24** of the cover **20** may be comprised of almost any rigid or semi-rigid medical grade material that is currently known in the art or that may be developed in the art in the future, as long as such material is liquid-impermeable, suitable for purposes of wound treatment (e.g., can be sterilized and does not absorb significant amounts of fluids, such as wound exudate), and is capable of supporting the cover **20** away from the wound **15**. For example, the lid member **23** and the cup body member **24** may each be comprised of rubber (including neoprene), metal, wood, paper, ceramic, glass, or rigid or semi-rigid polymer materials, such as polypropylene, polyvinyl chloride, silicone, silicone blends, or other polymers or combinations of all such polymers. It is to be noted that in various embodiments of this first version of the invention, the lid member **23** and the cup body member **24** may be constructed in whole or in part of gas-permeable materials, allowing limited amounts of oxygen to penetrate the lid member **23** and the cup body member **24** so that the portion of the body under the cover **20** in the area of the wound **15** can "breathe." In some embodiments, all portions of the top cup member **21** are preferably constructed of one type of semi-rigid material, such as polypropylene. In other embodiments, the top cup member **21** may be constructed of more than one material. For example, the lid member **23** may be constructed of silicone and the cup body member **24** of the cover **20** may be comprised of polyvinyl chloride, so that the lid member **23** may be stretched enough to overlap and seal against the outer edge of the cup body member **24** to form an operable seal, as described in more detail below. The preferred wall thickness of the cover **20** and its various component parts is dependent upon the size and shape of the cover **20**, the size, shape and contour of the portion of the body to be covered by the cover **20**, the magnitude of the reduced pressure to be maintained under the cover **20**, the materials comprising the cover **20**, and the individual preferences of the user of the cover **20**. For example, in the embodiment of the cover **20** illustrated in FIG. **1**, for a top cup member **21** constructed entirely of a silicone blend and having an approximate diameter of 4 inches and an approximate height of 3 inches, the preferred wall thickness of the top cup member **21** is in the range from 1/32 inches to 3/8 inches. It is to be noted that in other embodiments the wall thickness of the various portions of the top cup member **21** may vary from embodiment to embodiment, as well as from portion to portion of the top cup member **21**. Generally, the top cup member **21** of the illustrated embodiment may be constructed using any suitable means currently known in the art or that may be developed in the art in the future. For example, a top cup member **21** constructed entirely of a silicone blend may be manufactured by means of injection molding. As another example, embodiments of covers **20** constructed of different types of materials may be constructed in the manner described above in this paragraph. It is to be noted that embodiments of the top cup member **121** comprised of one piece, without separate lid member and cup body member as illustrated by the cover **120** of FIG. **2**, the top cup member may be constructed of substantially the same materials, have the same wall thicknesses, and be constructed in substantially the same manner as described above in this paragraph.

In some embodiments of this first version of the present invention, as illustrated in FIG. **1**, the cover **20** further comprises a port **25**. The port **25** is adapted to be of a size and shape so that the reduced pressure supply means may be operably connected to the top cup member **21** by means of the port **25**. When the port **25** is operably connected to the reduced pressure supply means, reduced pressure may be supplied to the volume under the cover **20** at the site of the wound **15** to be treated. Although the port **25** is positioned at a location near one side of the lid member **23** of the enclosure **20** in the embodiment illustrated in FIG. **1**, the port **25** may be located at other positions on the top cup member **21** (on either the lid member **23** or the cup body member **24**) in other embodiments, as long as the port **25** does not adversely affect the ability of the cup body member **24** to form an operable seal with the lid member **23** or the interface member **22**, as described in more detail below. Although the port **25** may be constructed of a material different from the material comprising the remainder of the top cup member **21** in various embodiments of the invention, the port **25** is preferably constructed from the same material comprising the top cup member **21** of the cover **20**. In the embodiment of the cover **20** illustrated in FIG. **1**, the port **25** is generally cylindrical in shape and is further comprised of an approximately cylindrical channel **25*a*** that extends from the top of the port **25** to the bottom of the port **25**. The port **25** of this embodiment is thus able to receive a vacuum system or reduced pressure supply means, which are described in more detail below, adapted to be connected to this shape of port **25** and channel **25*a***. In other embodiments of this first version of the invention, the port **25** or the channel **25*a*** or both may have different shapes and configurations as may be desired to adapt and connect the port **25** and the channel **25*a*** to the vacuum system or reduced pressure supply means, which are described in more detail below. In some of the embodiments comprising a port **125**, as illustrated in the embodiment of the cover **120** of FIG. **5**, the top cup member **121** may be further comprised of flow shutoff means (a one-way valve **129** in this embodiment), which are operably connected to the port **125** and described in more detail below. Referring again to FIG. **1** as an example, in other embodiments of this first version of the invention, a means of connecting the top cup member **21** to the reduced pressure supply means (described in more detail below) may be

located on the top cup member **21** in lieu of or in conjunction with the port **25**. For example, in some embodiments, the port **25** may be combined with a variable descending diameter adapter (commonly referred to as a "Christmas tree" adapter), a luer lock fitting, or other similar adapter or fitting.

In the embodiment of the cover **20** illustrated in FIG. **1**, the interface member **22** is removably attached to the cup body member **24** by the interface attachment means (described in more detail below), which are used to make an approximately airtight and liquid-tight seal with the top cup member **21**. In the illustrated embodiment, the interface member **22** is comprised of a border portion **26**, a membrane portion **27**, and membrane flow control means, which are described in more detail below. The membrane portion **27** in the illustrated embodiment has an approximately flat surface and is approximately circular in shape when viewed from above. In other embodiments, the membrane portion **27** may have other shapes. For example, the surface of the membrane portion **27** may have a curved surface, so that it is concave (similar to a concave lens) in shape. In addition, the interface member **22** (and its border portion **26** and membrane portion **27**) may be of almost any shape and size, as long as the interface member **22** is of a size and shape adapted so that it fits against a portion of the surface of the top cup member **21** in a manner so that an approximately airtight and liquid-tight seal is maintained by the interface attachment means, as described in more detail below. For example, when viewed from above, the interface member **22** may have an approximately elliptical, square, rectangular, polygonal, arcuate or other shape or combination of all such shapes. As another example, as illustrated in the embodiment of the interface member **22***a* of the cover **20***a* illustrated in FIG. **2**B, when viewed from the side, the interface member **22***a* may appear to have an approximately curved surface so that it may rest on portions of the body that have an approximately curved surface. Thus, in the illustrated embodiment, the border portion **26***a* has a generally flat top surface and an approximately concave lower surface bounding the membrane portion **27***a*. Also in this embodiment, the interface member **22***a* is removably attached to the cup body portion **24***a* of the top cup member **21***a* using the interface attachment means, which are described in more detail below. It is to be noted that in some embodiments, as illustrated by the embodiment of the cover **120** in FIG. **5**, the top surface of the border portion **126** of the interface member **122** may be positioned adjacent to the bottom surface of the top cup member **121**. The preferred shape and size of the interface member **22**, **22***a*, **122**, as well as the size and shape of the border portion **26**, **26***a*, **126** and membrane portion **27**, **27***a*, **127** comprising it, are dependent upon the size and shape of the top cup member **21**, **21***a*, **121**, materials comprising the cover **20**, **120**, the thickness of the interface member **22**, **22***a*, **122**, the nature of the wound to be treated, the size, shape and contour of the portion of the body to be covered by the cover **20**, **20***a*, **120**, the magnitude of the reduced pressure to be maintained under the cover **20**, **20***a*, **120**, the individual preferences of the user of the cover **20**, **20***a*, **120**, and other factors related to the sealing means and interface attachment means, as described in more detail below.

In the embodiment of the present invention illustrated in FIG. **1**, the border portion **26** is constructed of a material that is rigid enough to support the interface member **22** and the cover **20** away from the wound. Thus, the border portion **26** of the cover **20** may be comprised of almost any rigid or semi-rigid medical grade material that is currently known in the art or that may be developed in the art in the future, as long as such material is liquid-impermeable, suitable for purposes of wound treatment (e.g., can be sterilized and does not absorb significant amounts of fluids, such as wound exudate), and is capable of supporting the cover **20** away from the wound. For example, the border portion **26** may be comprised of rubber (including neoprene), metal, wood, paper, ceramic, glass, or rigid or semi-rigid polymer materials, such as polypropylene, polyvinyl chloride, silicone, silicone blends, or other polymers or combinations of all such polymers. In the illustrated embodiment, the membrane portion **27** is constructed of a material that is strong enough to support the membrane flow control means, which are described in more detail below. Thus, the membrane portion **27** of the cover **20** may be comprised of almost any rigid, semi-rigid, or flexible medical grade material that is currently known in the art or that may be developed in the art in the future, as long as such material is liquid-impermeable, suitable for purposes of wound treatment (e.g., can be sterilized and does not absorb significant amounts of fluids, such as wound exudate), and is capable of supporting the membrane flow control means, which are described in more detail below. For example, the membrane portion **27** may be comprised of rubber (including neoprene), metal, wood, paper, ceramic, glass, or rigid or semi-rigid polymer materials, such as polypropylene, polyvinyl chloride, silicone, silicone blends, or other polymers or combinations of all such polymers. It is to be noted that in various embodiments of this first version of the invention, the interface member **22** may be constructed in whole or in part of gas-permeable materials, allowing limited amounts of oxygen to penetrate the interface member **22** so that the portion of the body under the cover **20** can "breathe." In some embodiments, all portions of the interface member **22** are preferably constructed of one type of semi-rigid material, such as polypropylene. In other embodiments, the interface member **22** may be constructed of more than one material. For example, the membrane portion **27** may be constructed of silicone and the border portion **26** of the cover **20** may be comprised of polyvinyl chloride, so that the membrane portion **27** may be more flexible than the border portion **26**. The preferred wall thickness of the interface member **22** and its various component parts is generally dependent upon the same parameters as described above for the top cup member **21**. Although the interface member **22** need not be constructed of the same materials as the top cup member **21**, it is preferred that the interface member **22** be constructed of the same materials as the top cup member **21**. Generally, the interface member **22** of the illustrated embodiment may be constructed using any suitable means currently known in the art or that may be developed in the art in the future. For example, an interface member **22** constructed entirely of one material may be manufactured by means of injection molding. As another example, the component parts of an interface member **22** constructed of different types of materials may be attached together by any appropriate means, such as by welding, fusing, adhesives, glues, bolts, screws, pins, rivets, clamps, or other fasteners or other means or combinations of all such means.

Referring to the embodiment of the cover **20** illustrated in FIG. **1**, the interface member **22** is further comprised of membrane flow control means, which allow exudate aspirated from the wound **15** to flow into the volume of the top cup member **21**, but not in the opposite direction. In the illustrated embodiment, the membrane flow control means is comprised of eight flow control valves **28**. It is to be noted that in various embodiments the flow control valves **28** may be any type of valve currently known in the relevant art or that may be developed in the relevant art in the future that is suitable for operation in reduced pressure environments that allows fluids to flow in one direction through the valve, but not in the

opposite direction. For example, such valves **28** may generally be comprised of sprung or unsprung flapper or disc-type valves. In the illustrated environment, the flow control valves **28** are comprised of flapper-type valves, which are each further comprised of two flappers that are approximately semi-circular in shape and hinged at their outside edge so that when they fall together they form a seal that only allows fluids to flow in one direction (from the wound **15** to the volume within the top cup member **21** in this embodiment). Although the interface member **22** may have at least one flow control valve **28** in some embodiments, the interface member **22** may have almost any number of flow control valves **28** in other embodiments. For example, as illustrated in FIG. **5**, the interface member **122** may be comprised of two flow control valves **128**. In embodiments of the present invention comprising flow control valves **28**, the preferred number and type of valves **28** is dependent upon the shape and size of the interface member **22**, the materials comprising the interface member **22**, the thickness of the membrane portion **27**, the nature of the wound **15** to be treated, the amount of exudate anticipated, the size, shape and contour of the portion of the body to be covered by the cover **20**, the magnitude of the reduced pressure to be maintained under the cover **20**, the individual preferences of the user of the cover **20**, and other factors related to the sealing means, as described in more detail below. It is to be noted that in some embodiments, the flow control valves **28** may be formed from a single piece with the membrane portion **27**, or may be attached to the membrane portion **27** using any suitable means, such as by welding, fusing, adhesives, glues, bolts, screws, pins, rivets, clamps, or other fasteners or means or combinations of all such means. In other embodiments, the membrane flow control means may be comprised of a membrane portion **27** that is constructed in whole or in part of a material that allows fluids to flow in one direction, but not in the opposite direction. In these embodiments, exudate from the wound **15** flows from the wound **15** through the membrane portion **27** (or a portion thereof) to the volume within the top cup member **21**, but does not flow in the reverse direction back to the wound **15**.

In various embodiments of this first version of the present invention, the interface attachment means, which may be used to removably or permanently attach the interface member **22** to the top cup member **21**, may be any suitable means currently known in the relevant art or developed in the relevant art in the future that may be used to create an airtight and liquid-tight seal (sometimes referred to herein as an "operable seal") between the interface member **22** and the top cup member **21**. For example, in the embodiment illustrated in FIG. **3**, which is an enlarged cross-sectional elevation view of an interface attachment means, the border portion **26***b* is constructed of a semi-rigid material (such as silicone) and has a lip portion **26***b*' that extends around the perimeter of the interface member **22***b*. The cup body member **24***b* of the top cup member **21***b* also has a lip portion **24***b*' adjacent to the bottom edge of the cup body member **24***b* that extends around the perimeter of the bottom edge of the cup body member **24***b*. In this embodiment, the interface attachment means is comprised of the lip portion **26***b*' of the interface member **22***b* being stretched over the lip portion **24***b*' of the top cup member **21**, so that the lip portions are joined tightly together to form an operable seal. As another example, as illustrated in FIG. **4**, the interface attachment means may be comprised of an o-ring (or gasket or similar sealing means) **26***c*' that is positioned in a groove extending around the perimeter of the border portion **26***c* or the cup body member **24***c* or both, so that the o-ring **26***c*' forms an operable seal between the top cup member **21***c* and the interface member **22***c*. Referring again to FIG. **1** as an example, in still other embodiments, the exterior bottom portion of the cup body member **24** may be threaded and the interior bottom portion of the border portion **26** of the interface member **22** may be of a structure to receive such threads, so that an operable seal is created when the cup body member **24** is screwed into the interface member **22**. In yet other embodiments, as illustrated in FIG. **5**, the interface attachment means may be comprised of a magnetic strip (not shown) attached to the bottom surface **124***a* of the cup body member **124** of the top cup member **121** and to the top surface **126***a* of the border portion **126** of the interface member **122**, so that such surfaces abut against one another in the manner illustrated in FIG. **5** when the surfaces are attracted by magnetic force, creating an operable seal. Further, the interface attachment means may be comprised of a washer, gasket, o-ring or similar structure (not shown) attached to the bottom surface **124***a* of the cup body member **124** of the top cup member **121** or to the top surface **126***a* of the border portion **126** of the interface member **121**, or both, so that such surfaces abut against one another in the manner illustrated in FIG. **5**, creating an operable seal. In these embodiments, the top cup member **121** may be held in place against the interface member **122** by means of clips, brackets, pins, clamps, clasps, adhesives, adhesive tapes, quick-release or other fasteners, or combinations of such means. In addition, many types of sealing means that may be used to removably attach components of kitchenware-type items together may by used as the interface attachment means. It is also to be noted that in other embodiments the interface attachment means may be comprised of means to permanently attach the interface member **22** to the top cup member **21** or of forming the interface member **22** and the top cup member **21** as a single piece. In these embodiments, and referring to the cover **20** of FIG. **1** as an example, the interface member **22** and the top cup member **21** may be fabricated as a single piece, such as by injection molding, or they may be attached together by any appropriate means, such as by welding, fusing, adhesives, glues, bolts, screws, pins, rivets, clamps, or other fasteners or means or any combinations of all such means. Referring again to FIG. **1** as an example, it is to be noted that the lid attachment means that may be used to removably or permanently attach the lid member **23** to the cup body member **21** may have substantially the same structure, features, characteristics and operation as any or all of the embodiments comprising the interface attachment means described above.

An embodiment of a second version of the present invention is the treatment appliance **110** illustrated in FIG. **5**. In this embodiment, the treatment appliance **110** is comprised of a treatment device **111** and a vacuum system, generally designated **150**, which is operably connected to, and provides a supply of reduced pressure to, the treatment device **111**. Also in this embodiment, the treatment device **111** is comprised of a cover **120**. In addition, in this embodiment, the vacuum system **150** is further comprised of a reduced pressure supply source, generally designated **130**, which is illustrated schematically and described in more detail below, and reduced pressure supply means, generally designated **140**, which are described in more detail below. Also in this embodiment, the reduced pressure supply means **140** are used to connect the reduced pressure supply source **130** to the cover **120** in a manner so that reduced pressure is supplied to the volume under the cover **120** at the site of the wound **115** to be treated, as described in more detail below. In the embodiment of the second version of the invention illustrated in FIG. **5**, the illustrated cover **120** is comprised of a top cup member **121**, an interface member **122**, and interface attachment means to removably attach the top cup member **121** to the interface

member **122**. In the illustrated embodiment, the interface attachment means is comprised of a magnetic strip (not shown) on the top surface **126***a* of the border portion **126** of the interface member **122** and a magnetic strip (not shown) on the bottom surface **124***a* of the cup body member **124** of the top cup member **121**. An operable seal is formed between the interface member **122** and the top cup member **121** by the magnetic attraction of the magnetic strips. In other embodiments, the interface attachment means may be comprised of any of the interface attachment means of the first version of the present invention illustrated and described above in connection with FIG. **1** through FIG. **5**. Alternatively, the interface member **122** and the top cup member **121** may be formed as a single piece or permanently attached, as illustrated and described above in connection with FIG. **1** through FIG. **5**. It is to be noted that in this and other embodiments of this second version of the invention, the cover **120** may have substantially the same structure, features, characteristics and operation as any embodiment of any of the covers **20**, **20***a*, **120** of the first version of the invention described above and illustrated in connection with FIG. **1** through FIG. **5**. It is also to be noted that in other embodiments of the present invention, the top cup member **121** may be used for treatment of a wound **115** without the interface member **126**. In these embodiments, the top cup member **121** alone is placed over the wound **115** and reduced pressure is applied to the volume under the top cup member **121**.

In the various embodiments of this second version of the present invention, as illustrated in FIG. **5**, the interface member **122** of the cover **120** may be comprised of a semi-rigid material and the sealing means may be comprised of the suction of the interface member **122** against the portion **116** of the body adjacent to the interface member **122** of the cover **120**, such suction being produced by the presence of reduced pressure in the volume under the cover **120** at the site of the wound **115**. In other embodiments, the sealing means may be comprised of an adhesive, an adhesive tape, lanolin, or other sealant, or any combination of such means, that is disposed between the interface member **122** and the portion **116** of the body adjacent to the interface member **122** or disposed over the interface member **122** and the portion of the body outside the perimeter of the interface member **122**. In yet other embodiments, the sealing means may be comprised of a material (not illustrated) that is positioned approximately over the cover **120** and wrapped around the portion **116** of the body on which the cover **120** is positioned. This material is used to hold the cover **120** against the adjacent portion **116** of the body. For example, if the wound **115** were on the patient's leg, an elastic bandage or adhesive tape may be wrapped over the cover **120** and around the leg.

In the embodiment illustrated in FIG. **5**, the reduced pressure supply source **130** of the vacuum system **150**, which produces a source of reduced pressure or suction that is supplied to the cover **120**, is comprised of a vacuum pump **131**, a control device **132**, and a filter **133**. Although the preferred means of producing the reduced pressure or suction is a vacuum pump **131** in this embodiment, in other embodiments of this second version of the invention other means may be used, such as an outlet port of a centralized hospital vacuum system. In the illustrated embodiment, predetermined amounts of suction or reduced pressure are produced by the vacuum pump **131**. The vacuum pump **131** is preferably controlled by a control device **132**, such as a switch or a timer that may be set to provide cyclic on/off operation of the vacuum pump **131** according to user-selected intervals. Alternatively, the vacuum pump **131** may be operated continuously without the use of a cyclical timer. In addition, in some embodiments the control device **132** may provide for separate control of the level of reduced pressure applied to the volume under the cover **120** at the site of the wound **115** and the flow rate of fluid aspirated from the wound **115**, if any. In these embodiments, relatively low levels of reduced pressure may be maintained at the site of the wound **115** in the volume under the treatment device **111**, while still providing for the removal of a relatively large volume of exudate from the wound **115**. A filter **133**, such as a micropore filter, is preferably attached to the inlet of the vacuum pump **131** to prevent potentially pathogenic microbes or aerosols from contaminating, and then being vented to atmosphere by, the vacuum pump **131**. In other embodiments, the filter **133** may also be a hydrophobic filter that prevents any exudate from the wound **115** from contaminating, and then being vented to atmosphere by, the vacuum pump **131**. It is to be noted that in other embodiments of the invention, the reduced pressure supply source **130** may not have a filter **133** or a control **132** or any combination of the same.

In other embodiments of the second version of the invention, the reduced pressure supply source **130** of the vacuum system **150**, may be comprised of a small, portable vacuum pump **131**. In some of these embodiments, a filter **133** or a power source (not illustrated), or both, may also be contained within the housing for the portable vacuum pump **131**. In these embodiments, the portable vacuum pump **131** is preferably controlled by a control device **132** that is also located within the housing for the portable vacuum pump **131**, which may provide substantially the same functions as the control device **132** described above. Except for its smaller size, the portable vacuum pump **131** may operate in substantially the same manner as the vacuum pump **131** described above. Also, in these embodiments, the filter **133** may have the same structure, features, characteristics and operation, and provide substantially the same functions, as the filter **133** described above. In some of these embodiments, the filter **133** may be rigidly connected to the portable vacuum pump **131**. The power source may be any source of energy currently known in the art or that may be developed in the art in the future that may be used to power the portable vacuum pump **131**. For example, in some embodiments, the power source may be a fuel cell, battery or connection to a standard wall electrical outlet.

In the embodiment of the second version of the invention illustrated in FIG. **5**, the reduced pressure supply means **140** of the vacuum system **150**, which are used to connect the reduced pressure supply source **130** to the cover **120** so that reduced pressure is supplied to the volume under the cover **120** at the site of the wound **115**, is comprised of at least one tubing member **141**. In this embodiment, the at least one tubing member **141** is sufficiently flexible to permit movement of the at least one tubing member **141**, but is sufficiently rigid to resist constriction when reduced pressure is supplied to the cover **120** or when the location of the wound **115** is such that the patient must sit or lie upon the at least one tubing member **141** or upon the treatment device **111**. In the embodiment illustrated in FIG. **5**, the at least one tubing member **141** is connected to the cover **120** by inserting one end of the at least one tubing member **141** into an opening **125***a* of a port **125** of the cover **120**. In this embodiment, the at least one tubing member **141** is held in place in the opening **125***a* by means of an adhesive. It is to be noted that in other embodiments of this second version of the invention, the at least one tubing member **141** may be connected to the port **125** of the cover **120** using any suitable means currently known in the art or developed in the art in the future. Examples include variable descending diameter adapters (commonly referred to as

"Christmas tree" adapters), luer lock fittings and adapters, clamps, and combinations of such means. Alternatively, the port **125** and the at least one tubing member **141** may be fabricated as a single piece. Similar means may be used to connect the other end of the at least one tubing member **141** to the vacuum pump **131** or other reduced pressure supply source **130** providing the reduced pressure.

In the embodiment of the second version of the present invention illustrated in FIG. **5**, the treatment device **111** functions to actively draw fluid or exudate from the wound **115** through two flow control valves **128** positioned on the membrane portion **127** of the interface member **122** into the interior volume of the cover **120**. In this embodiment, it is generally desirable to collect exudate in the interior volume of the cover **120**, but not to allow the exudate to flow into the reduced pressure supply means **140** in order to prevent clogging of the vacuum pump **131**. In addition, it is desirable to halt or inhibit the supply of reduced pressure to the cover **120** in the event that the exudate aspirated from the wound **115** exceeds a predetermined quantity. Further, it is desirable to interrupt the application of suction to the cover **120** to prevent exsanguination in the unlikely event a blood vessel ruptures under the cover **120** during treatment. If, for example, a blood vessel ruptures in the vicinity of the cover **120**, a shutoff mechanism would be useful to prevent the vacuum system **150** from aspirating any significant quantity of blood from the patient. As a result, the top cup member **121** in the illustrated embodiment is further comprised of flow shutoff means. In this embodiment, the flow shutoff means is comprised of a flapper-type valve **129**, which is generally comprised of a flapper **129***a* that is hinged to an interior surface of the port **125** and seats against a stop **129***b*. The flapper **129***a* is buoyant when compared to the exudate, so that it floats upon the exudate as the level of exudate in the volume of the cover **120** rises to the level of the flapper valve **129**. The flapper **129***a* is, however, heavy enough not to be drawn against the stop **129***b* when reduced pressure is applied to the cover **120** by the vacuum system **150**. Thus, as the exudate level rises to the level of the stop **129***b*, the flapper **129***a* floats upon the exudate until the flapper **129***a* seats against the stop **129***b*, which seals the cover **120** so that reduced pressure is no longer supplied to the cover **120** by the vacuum system **150**. In other embodiments, the flow shutoff means may be comprised of almost any other type of shutoff valve currently known in the relevant art or that may be developed in the relevant art in the future that is suitable for this purpose and use in a reduced pressure environment. Another example of such valve is a float valve, wherein a float ball floats upon the exudate so that the float ball seals against a seat when the level of exudate reaches a predetermined level. All such valves are well known in the relevant art. In other embodiments, other types of mechanisms may also be employed to detect the liquid level within the cover **120** in order to arrest operation of the vacuum system **150**. In addition, in various embodiments of this second version of the invention, the flow shutoff means may be comprised of any means that enables the vacuum system **150** to halt the supply of reduced pressure to the cover **120** at any time that the volume of exudate from the wound **115** exceeds a predetermined amount. Such means may include mechanical switches, electrical switches operably connected to the vacuum system controller **132**, optical, thermal or weight sensors operably connected to the vacuum system controller **132**, and any other means that are currently known in the relevant art or that may be developed in the relevant art in the future.

In some embodiments of this second version of the invention, the treatment device **111** further comprises tissue protection means (not illustrated) to protect and strengthen the surface tissue of the portions **116** of the body that are adjacent to the cover **120**. The tissue protection means protects such tissue by preventing abrasion and maceration of the tissue. Preferably, the tissue protection means is a hydrocolloid material, such as COLOPAST Hydrocolloid 2655 anhydrous lanolin, or any combination of such hydrocolloid materials. More preferably, the tissue protection means is COLOPAST Hydrocolloid 2655. The tissue protection means may be applied to the body tissue to be protected, or it may be applied to the surface of the cover **120** that is to be in contact with the body tissue **116**, or both, prior to placing the cover **120** over the wound **115**. It is to be noted that application of the tissue protection means to the body tissue **116** that is adjacent to the cover **120** at the site of the wound **115** may only entail application of the tissue protection means to the parts of the body tissue **116** adjacent to the cover **120** that require such protection.

Referring to FIG. **5**, a method of using the treatment appliance **110** of the illustrated embodiment is also disclosed. In this example, the cover **120** is removed from an aseptic package in which it is stored. The various component parts of the cover are operably sealed together. For example, in the illustrated embodiment, the top cup member **121** is operably sealed to the interface member **122**. In embodiments where the top cup member **21** further comprises a lid member **23** and a cup body member **24**, as illustrated in FIG. **1**, the lid member **23** and the cup body member **24** are also operably sealed together. Referring again to FIG. **5**, this sealing of the component parts of the cover **120** may occur before, during or after the cover **120** is placed over the wound **115**. The cover **120** is placed over and encloses the wound **115**. The cover **120** is connected to the vacuum system **150** by means of the port **125** on the cover **120** either before, after or during the placement of the cover **120** over the wound **115**. Where it is deemed necessary by the user of the treatment appliance **110**, tissue protection means, as described above, may be placed on a portion of the cover **120**, on the body tissue to be protected, or both, prior to placing the cover **120** over the wound **115**. Reduced pressure is then supplied to the cover **120** by the vacuum system **150**. In the illustrated embodiment, when reduced pressure is applied to the volume under the cover **120** at the site of the wound **115**, the cover **120** is drawn downward by the reduced pressure so that the cover **120** is drawn tightly against the surface of the adjacent portion **116** of the body, thus forming an operable seal between the cover **120** and the portion **116** of the body adjacent to the cover **120**. References to an "operable seal" and "sealing means" herein refer generally to a seal that may be made gas-tight and liquid-tight for purposes of the reduced pressure treatment of the wound **115**. It is to be noted that this seal need not be entirely gas-tight and liquid-tight. For example, the operable seal may allow for a relatively small degree of leakage, so that outside air may enter the volume under the cover **120** at the site of the wound **115**, as long as the degree of leakage is small enough so that the vacuum system **150** can maintain the desired degree of reduced pressure in the volume under the cover **120** at the site of the wound **115**. As another example, the operable seal formed by the cover **120** may not be solely capable of maintaining the reduced pressure in the volume under the cover **120** at the site of the wound **115** due to the shape of the body portion **116** at the site of the wound **115**, due to the orientation of the wound **115**, or due to some other reason. In these cases, as well as other cases, it may be necessary or desirable to provide other sealing means (not illustrated), which are described in more detail above. In some embodiments of the second version of the present invention comprising a lid

member **23**, as illustrated by the cover **20** of FIG. **1**, the method may also comprise one or more of the steps of halting the application of reduced pressure to the cover **20**, removing the lid member **23** from the cup body member **24**, attending to the wound **115**, re-attaching the lid member **23** to the cup body member **24**, and then reapplying reduced pressure to the volume under the cover **20** in the area of the wound **115**. In yet other embodiments, and referring again to FIG. **5**, the method may comprise one or more of the steps of monitoring the fluid level **117** in the volume within the cover **120**, halting the application of reduced pressure to the cover **120** when the fluid level **117** reaches a predetermined level, removing the fluid in the volume within the cover **120**, and reapplying reduced pressure to the volume under the cover **20** in the area of the wound **115**. In the preferred embodiments of this second version of the invention, the reduced pressure maintained in the volume under the cover **120** at the site of the wound **115** is in the range from approximately 20 mm of Hg below atmospheric pressure to approximately 125 mm of Hg below atmospheric pressure. In yet other embodiments, the reduced pressure is applied to the cover **120** in a cyclic nature, the cyclic nature providing alternating time periods of application of reduced pressure and non-application of reduced pressure. In various embodiments, the method also comprises the step of maintaining reduced pressure in the volume under the cover **120** at the site of the wound **115** until the wound **115** has progressed toward a selected stage of healing.

An embodiment of a third version of the invention is the treatment appliance **210** illustrated in FIG. **6**. In this embodiment, the treatment appliance **210** is comprised of a treatment device **211** and a vacuum system, generally designated **250**, operably connected to, and providing a supply of reduced pressure to, the treatment device **211**. In addition, in this embodiment, the vacuum system **250** is further comprised of a reduced pressure supply source, generally designated **260**, which is described in more detail below, and reduced pressure supply means **240**, which are described in more detail below. Also in this embodiment, the treatment device **211** is further comprised of a cover **220**, which generally has substantially the same structure, features, and characteristics as the embodiment of the cover **120** illustrated and described above in connection with FIG. **5**. It is to be noted, however, that in other embodiments of this third version of the invention, the cover **220** may have substantially the same structure, features, characteristics and operation as any embodiment of all of the covers **20**, **20***a*, **120** of the first and second versions of the invention described above and illustrated in connection with FIG. **1** through FIG. **5**. In the embodiment illustrated in FIG. **6**, the cover **220** is placed over and encloses a wound **215**. In the illustrated embodiment, the cover **220** may be sealed to the adjacent portions **216** of the body using any of the sealing means or operable seals described above and illustrated in connection with FIG. **5**.

In the embodiment of the third version of the invention illustrated in FIG. **6**, the vacuum system **250** is generally comprised of a suction bulb **261** having an inlet port **262** and an outlet port **263**, a bulb connection tubing member **264**, an exhaust tubing member **265**, an exhaust control valve **266**, a filter **267**, and a supplemental vacuum system (illustrated schematically and generally designated **250***a*). In this embodiment, the suction bulb **261** is a hollow sphere that may be used to produce a supply of reduced pressure for use with the treatment device **211**. In addition, in some embodiments, the suction bulb **261** may also be used to receive and store exudate aspirated from the wound **215**. The inlet port **262** of the suction bulb **261** is connected to one end of the bulb connection tubing member **264**, which is connected to the reduced pressure supply means **240**, a tubing member in this embodiment, by means of a connector **246**. The connection tubing member **264** is connected to the reduced pressure supply means **240** in a manner so that the interior volume of the suction bulb **261** is in fluid communication with the volume under the cover **220** in the area of the wound **215**. In this embodiment, the bulb connection tubing member **264** and the reduced pressure supply means **240** are sufficiently flexible to permit movement of the bulb connection tubing member **264** and the reduced pressure supply means **240**, respectively, but are sufficiently rigid to resist constriction when reduced pressure is supplied to the cover **220** or when the location of the wound **215** is such that the patient must sit or lie upon the bulb connection tubing member **264**, upon the reduced pressure supply means **240**, or upon the treatment device **311**. The outlet port **263** of the suction bulb **261** is connected to the exhaust tubing member **265**. In this embodiment, the exhaust tubing member **265** is sufficiently flexible to permit movement of the exhaust tubing member **265**, but is sufficiently rigid to resist constriction when reduced pressure is supplied to the cover **220**. The inlet port **262** of the suction bulb **261** may be connected to the bulb connection tubing member **264** and the outlet port **263** of the suction bulb **261** may be connected to the exhaust tubing member **265** using any suitable means, such as by welding, fusing, adhesives, clamps, or any combination of such means. In addition, in some embodiments, which are the preferred embodiments, the suction bulb **261**, the bulb connection tubing member **264**, and the exhaust tubing member **265** may be fabricated as a single piece. In the illustrated embodiment, the exhaust control valve **266** and the filter **267** are operably connected to the exhaust tubing member **265**. In this embodiment, the exhaust control valve **266** is used to regulate the flow of fluids (gases and liquids) to and from the suction bulb **261** and the supplemental vacuum system **250***a*. In embodiments of the invention that do not have a supplemental vacuum system **250***a*, the exhaust control valve **266** regulates flow of fluids to and from the suction bulb **261** and the outside atmosphere. Generally, the exhaust control valve **266** allows fluids to flow out of the suction bulb **261** through the outlet port **263**, but not to flow in the reverse direction unless permitted by the user of the appliance **210**. Any type of flow control valve may be used as the exhaust control valve **266**, as long as the valve **266** is capable of operating in the anticipated environment involving reduced pressure and wound **215** exudate. Such valves are well known in the relevant art, such as sprung and unsprung flapper-type valves and disc-type valves, operating in conjunction with or without ball, gate and other similar types of valves. In this embodiment, the filter **267** is operably attached to the exhaust tubing member **265** between the outlet port **263** of the suction bulb **261** and the exhaust control valve **266**. The filter **267** prevents potentially pathogenic microbes or aerosols from contaminating the exhaust control valve **266** (and supplemental vacuum system **250***a*), and then being vented to atmosphere. The filter **267** may be any suitable type of filter, such as a micropore filter. In other embodiments, the filter **267** may also be a hydrophobic filter that prevents any exudate from the wound **215** from contaminating the exhaust control valve **266** (and the supplemental vacuum system **250***a*) and then being vented to atmosphere. In still other embodiments, the filter **267** may perform both functions. It is to be noted, however, that the outlet port **263**, the exhaust control valve **266**, the filter **267**, or any combination of the exhaust control valve **266** and the filter **267**, need not be utilized in connection with the vacuum system **250** in other embodiments of the invention.

In some embodiments of the third version of the invention illustrated in FIG. **6** that do not utilize a supplemental vacuum

system **250***a*, the suction bulb **261** may be used to produce a supply of reduced pressure in the following manner. First, the user of the appliance **210** appropriately seals all of the component parts of the appliance **210** in the manner described herein. For example, the top cup member **221** of the cover **220** is operably sealed to the interface member **222** of the cover **220**, and the cover **220** is placed over and encloses the wound **215**. At least a portion of the interface member **222** is sealed (or placed adjacent) to the adjacent portions **216** of the body, and the reduced pressure supply means **240** is connected to the bulb connection tubing member **264** by means of the connector **246**. The user then opens the exhaust control valve **266** and applies force to the outside surface of the suction bulb **261**, deforming it in a manner that causes its interior volume to be reduced. When the suction bulb **261** is deformed, the gas in the interior volume is expelled to atmosphere through the outlet port **263**, the exhaust tubing member **265**, the filter **267**, and the exhaust control valve **266**. The user then closes the exhaust control valve **266** and releases the force on the suction bulb **261**. The suction bulb **261** then expands, drawing gas from the area of the wound **215** under the treatment device **211** into the suction bulb **261** and causing the pressure in such area to decrease. To release the reduced pressure, the user of the appliance **210** may open the exhaust control valve **266**, allowing atmospheric air into the interior volume of the suction bulb **261**. The level of reduced pressure may also be regulated by momentarily opening the exhaust control valve **266**.

The suction bulb **261** may be constructed of almost any fluid impermeable flexible or semi-rigid material that is suitable for medical use and that can be readily deformed by application of pressure to the outside surface of the suction bulb **261** by users of the appliance **210** and still return to its original shape upon release of the pressure. For example, the suction bulb **261** may be constructed of rubber, neoprene, silicone, or other flexible or semi-rigid polymers, or any combination of all such materials. In addition, the suction bulb **261** may be of almost any shape, such as cubical, ellipsoidal, or polyhedral. The suction bulb **261** may also be of varying size depending upon the anticipated use of the suction bulb **261**, the size of the wound treatment device **211**, use of a supplemental vacuum system **250***a*, the level of reduced pressure desired, and the preference of the user of the appliance **210**. In the embodiment of the invention illustrated in FIG. **6**, the supplemental vacuum system **250***a* is connected to the exhaust tubing member **265** and is used to provide a supplemental supply of reduced pressure to the suction bulb **261** and treatment device **211**. In this embodiment, the supplemental vacuum system **250***a* may have substantially the same structure, features, characteristics and operation of the various embodiments of the vacuum system **250** of the second version of the invention described above and illustrated in connection with FIG. **5**. It is to be noted, however, that the supplemental vacuum system **250***a* need not be used in connection with the vacuum system **250** in other embodiments of the invention.

Except as illustrated and described above in connection with FIG. **6**, the treatment appliance **210** may generally be used in a manner similar to the treatment appliance **110** described above and illustrated in connection with FIG. **5**. As a result, except as described herein, the example of how the embodiment of the treatment appliance **110** and the cover **120** described above and illustrated in connection FIG. **5** may be used in treatment of a wound **115** also applies to the embodiment of the appliance **210** of the third version of the invention described above and illustrated in connection with FIG. **6**.

What is claimed is:

1. An appliance for administering reduced pressure treatment to a wound on a body, the appliance comprising:

a cover comprising:

a top cup member, wherein the top cup member comprises a lid member, a cup body member, and lid attachment means configured to removably attach the lid member to the cup body member;

an interface member, wherein the interface member comprises flow control means configured to permit exudate from the wound to flow from the wound into the top cup member, but not in the opposite direction; and

interface attachment means configured to removably attach the top cup member to the interface member;

wherein the cover is sized to be placed over and enclose the wound and adapted to maintain reduced pressure in the volume under the cover at the site of the wound;

a seal configured to directly seal the interface member to the body so that reduced pressure may be maintained in the volume under the cover at the site of the wound, the seal being maintainable when the top cup member is removed from the interface member; and

a reduced pressure supply means configured to provide a supply of reduced pressure from a reduced pressure supply source to the cover.

2. The appliance of claim **1**, wherein the cover is cylindrical in shape.

3. The appliance of claim **1**, wherein the interface attachment means provides for removable attachment of the top cup member to the interface member, but does not provide for permanent attachment of the top cup member to the interface member.

4. The appliance of claim **1**, wherein the interface attachment means comprises an o-ring seal.

5. The appliance of claim **3**, wherein a portion of the interface member is of a size and shape adapted to fit tightly against a portion of the top cup member, wherein an operable seal is created between the interface member and the top cup member.

6. The appliance of claim **1**, wherein the interface attachment means comprises a magnetic seal.

7. The appliance of claim **1**, wherein the interface attachment means provides for permanent attachment of the top cup member to the interface member, but does not provide for removable attachment of the top cup member to the interface member.

8. The appliance of claim **1**, wherein the interface member is further comprised of a membrane portion that is disposed approximately adjacent to the body and the flow control means comprises at least one one-way valve operably disposed in the membrane portion.

9. The appliance of claim **1**, wherein the interface member is further comprised of a membrane portion that is disposed approximately adjacent to the body and that permits fluid to flow in only one direction, and the flow control means comprises all or a portion of the membrane portion.

10. The appliance of claim **1**, wherein the lid attachment means comprises an o-ring seal.

11. The appliance of claim **1**, wherein a portion of the lid member is of a size and shape adapted to fit tightly against a portion of the cup body member, wherein an operable seal is created between the lid member and the cup body member.

12. The appliance of claim **1**, wherein the lid attachment means comprises a magnetic seal.

13. The appliance of claim 1, wherein the seal is disposed between at least a portion of the interface member and a portion of the body adjacent to the wound.

14. The appliance of claim 1, wherein the interface member defines a perimeter and the seal is disposed at least over a portion of the interface member and at least a portion of the body that is outside of the perimeter of the interface member.

15. The appliance of claim 1, wherein the seal comprises an adhesive.

16. The appliance of claim 1, wherein the seal comprises lanolin.

17. The appliance of claim 1, wherein the cover is configured such that the reduced pressure supplied to the cover operably seals the interface member to the body.

18. The appliance of claim 1, wherein the cover is configured such that the reduced pressure supplied to the cover operably seals the cup body member to the interface member.

19. The appliance of claim 1, wherein the cover is configured such that the reduced pressure supplied to the cover operably seals the lid member to the cup body member.

20. The appliance of claim 1, wherein the interface member is elliptical in shape.

21. The appliance of claim 1, wherein the interface member is rectangular in shape.

22. The appliance of claim 1, wherein the interface member comprises at least one curved portion adapted to be positioned on a portion of the body and configured to approximately match the portion of the body on which the curved portion is positioned.

23. The appliance of claim 1, wherein the reduced pressure supply means comprises at least one conduit.

24. The appliance of claim 1, wherein the cover is configured such that at least a portion of the cover is shaped to approximately match the surface shape of at least a portion of the body covered by the cover.

25. The appliance of claim 1, wherein the lid attachment means comprises one or more clamps.

26. The appliance of claim 1, wherein the lid attachment means comprises one or more mechanical fasteners.

27. The appliance of claim 1, wherein the cover comprises a port configured to be removably attached to the reduced pressure supply means.

28. The appliance of claim 27, wherein the port is provided on the lid member.

29. The appliance of claim 1, wherein the appliance is configured to inhibit the supply of reduced pressure to the cover when an amount of exudate under the cover exceeds a predetermined quantity.

30. The appliance of claim 1, wherein the cover comprises a valve that is configured to inhibit the supply of reduced pressure to the cover when an amount of exudate under the cover exceeds a predetermined quantity.

31. The appliance of claim 8, wherein the membrane portion defines at least one curved surface adapted to be positioned on a portion of the body and configured to approximately match the portion of the body against which the curved surface is positioned.

32. The appliance of claim 8, wherein the membrane portion comprises rubber.

33. The appliance of claim 8, wherein the membrane portion comprises neoprene.

34. The appliance of claim 8, wherein the membrane portion comprises a gas-permeable material.

35. The appliance of claim 8, wherein the membrane portion is configured to allow oxygen to flow therethrough so as to expose a portion of the body under the membrane portion with the oxygen.

36. The appliance of claim 1, further comprising a reduced pressure supply source configured to be connected to the reduced pressure supply means.

37. The appliance of claim 1, wherein the interface attachment means comprises at least one of a clamp, a clasp, and other fastener.

38. The appliance of claim 1, wherein the interface member defines an outer peripheral edge that extends beyond an outer peripheral edge of the cup body member.

39. The appliance of claim 1, wherein the cover is configured so that no portion of the top cup member directly contacts the body when the top cup member is attached to the interface member and the interface member is sealed to the body.

40. The appliance of claim 1, wherein the cover is configured so that no portion of the top cup member directly contacts the seal when the top cup member is removably attached to the interface member and the interface member is sealed to the body.

41. An appliance for administering reduced pressure treatment to a wound on a body, the appliance comprising:

a cover configured to enclose the wound such that a reduced pressure is provided to the wound, the cover comprising:

a lid member;

a body member; and

an interface member;

wherein:

the lid member is configured to be removably and sealingly supported by a first portion of the body member so as to substantially enclose the first portion of the body member when the lid member is supported by the body member;

the interface member is removably fastenable to a second portion of the body member so as to substantially enclose the second portion of the body member when the body member is removably fastened to the interface member;

an interior volume is defined within the body member between the interface member and the lid member when the lid member is supported by the body member and the body member is removably fastened to the interface member;

the interface member is adapted to be sealed to a portion of the body adjacent to the wound and is configured to permit exudate from the wound to flow from the wound into the interior volume and to inhibit the flow of exudate from the interior space into the wound; and

a port configured to connect the interior volume of the body member to a source of negative pressure.

42. The appliance of claim 41, further comprising a reduced pressure supply source configured to provide a supply of reduced pressure through the port to the interior volume.

43. The appliance of claim 41, further comprising a conduit configured to connect the port to a reduced pressure supply source.

44. The appliance of claim 41, further comprising a seal configured to seal at least a portion of the interface member with a portion of the body adjacent to the wound.

45. The appliance of claim 41, wherein the interface member defines a perimeter and a seal is disposed at least over a portion of the interface member configured to seal with at least a portion of the body that is outside of the perimeter of the interface member.

46. The appliance of claim 44, wherein the seal comprises adhesive.

47. The appliance of claim 44, wherein the seal comprises lanolin.

48. The appliance of claim **41**, wherein the cover is configured such that a supply of reduced pressure provided to the cover operably seals the interface member to the body.

49. The appliance of claim **41**, wherein the cover is configured such that a supply of reduced pressure provided to the cover operably seals the body member to the interface member.

50. The appliance of claim **41**, wherein the cover is configured such that a supply of reduced pressure provided to the cover operably seals the lid member to the body member.

51. The appliance of claim **41**, wherein the body member is cylindrical in shape.

52. The appliance of claim **41**, wherein the interface member is elliptical in shape.

53. The appliance of claim **41**, wherein the interface member is square in shape.

54. The appliance of claim **41**, wherein the interface member is rectangular in shape.

55. The appliance of claim **41**, wherein the interface member comprises at least one curved portion adapted to be positioned on a portion of the body and configured to approximately match the portion of the body on which the curved portion is positioned.

56. The appliance of claim **41**, wherein the cover is configured such that at least a portion of the cover is shaped to approximately match the surface shape of at least a portion of the body covered by the cover.

57. The appliance of claim **41**, wherein the lid member is attached to the body member using one or more clamps.

58. The appliance of claim **41**, wherein the lid member is attached to the body member using one or more quick release fasteners.

59. The appliance of claim **41**, wherein the lid member is attached to the body member using one or more brackets.

60. The appliance of claim **41**, wherein the lid member is attached to the body member using one or more mechanical fasteners.

61. The appliance of claim **41**, wherein the appliance is configured to inhibit a supply of reduced pressure to the cover when an amount of exudate within the interior space exceeds a predetermined quantity.

62. The appliance of claim **41**, wherein the cover comprises a valve that is configured to inhibit a supply of reduced pressure to the cover when an amount of exudate within the interior space exceeds a predetermined quantity.

63. The appliance of claim **41**, wherein at least a portion of the interface member comprises rubber.

64. The appliance of claim **41**, wherein at least a portion of the interface member comprises neoprene.

65. The appliance of claim **41**, wherein at least a portion of the interface member comprises a gas-permeable material.

66. The appliance of claim **41**, wherein the interface member is configured to allow oxygen to flow to a portion of the body under the interface member.

67. The appliance of claim **41**, wherein the interface member is removably fastenable to a second portion of the body member using a clamp, a clasp, or other fastener.

68. The appliance of claim **41**, wherein the interface member sealingly supports the second portion of the body member.

69. The appliance of claim **41**, wherein the interface member defines an outer peripheral edge that extends beyond an outer peripheral edge of the body member.

70. The appliance of claim **41**, wherein the cover is configured so that no portion of the body member directly contacts the body when the body member is removably fastened to the interface member and the interface member is sealed to the body.

71. The appliance of claim **41**, wherein the interface member is configured to remain sealed to the body when the body member is removed from the interface member.

72. An appliance for administering reduced pressure treatment to a wound on a body, the appliance comprising:

a cover comprising a lid member, a cup body member comprising a lower portion configured to surround the wound and an upper portion defining a volume within the cup body member configured to extend above the body so as not to contact the wound when the cover is positioned on the body, the lid member being configured to be removably and sealingly attached to the cup body member, wherein the cover is sized to be placed over and enclose the wound and adapted to maintain reduced pressure in the volume under the cover at the site of the wound, and wherein the cup body member defines an opening sized and shaped to allow a user to access the wound when the lid member is removed from the cup body member without removing the cup body member from the body;

an interface member configured to be removably fastened to the lower portion of the cup body member and configured to permit exudate from the wound to flow from the wound into the volume within the cup body member and to inhibit the flow of exudate from the interior within the cup body member into the wound; and

a port configured to connect the volume of the cup body member to a source of negative pressure;

wherein the appliance is configured such that when negative pressure is applied through the port, flow is created from the wound through the volume within the cup body member and through the port, said flow being unobstructed between the volume within the cup body member and the lid member when the lid member is attached to the cup body member.

73. The appliance of claim **72**, further comprising a reduced pressure supply source configured to provide a supply of reduced pressure through the port to the interior volume.

74. The appliance of claim **72**, further comprising a conduit configured to connect the port to a reduced pressure supply source.

75. The appliance of claim **72**, further comprising a seal configured to seal at least a portion of the interface member with a portion of the body adjacent to the wound.

76. The appliance of claim **72**, wherein the interface member comprises a membrane and a plurality of flow control valves.

77. The appliance of claim **72**, wherein the interface member is configured to be removably fastened to the lower portion of the cup body member using a clamp, a clasp, or other fastener.

78. The appliance of claim **72**, wherein the interface member defines an outer peripheral edge that extends beyond an outer peripheral edge of the cup body member.

79. The appliance of claim **72**, wherein the cover is configured so that no portion of the body member directly contacts the body when the body member is removably fastened to the interface member and the interface member is sealed to the body.

80. The appliance of claim **72**, wherein the interface member is configured to remain sealed to the body when the lower portion of the cup body member is removed from the interface member.

* * * * *