US008157731B2

(12) **United States Patent**
Teller et al.

(10) **Patent No.: US 8,157,731 B2**
(45) **Date of Patent: *Apr. 17, 2012**

(54) **METHOD AND APPARATUS FOR AUTO JOURNALING OF CONTINUOUS OR DISCRETE BODY STATES UTILIZING PHYSIOLOGICAL AND/OR CONTEXTUAL PARAMETERS**

(75) Inventors: **Eric Teller**, Pittsburgh, PA (US); **Jonathan Farringdon**, Pittsburgh, PA (US); **David Andre**, Pittsburgh, PA (US); **Christopher Pacione**, Pittsburgh, PA (US); **John Stivoric**, Pittsburgh, PA (US); **Scott Safier**, Pittsburgh, PA (US); **Raymond Pelletier**, Pittsburgh, PA (US); **Suresh Vishnubhatla**, Wexford, PA (US)

(73) Assignee: **BodyMedia, Inc.**, Pittsburgh, PA (US)

(*) Notice: Subject to any disclaimer, the term of this patent is extended or adjusted under 35 U.S.C. 154(b) by 1459 days.

This patent is subject to a terminal disclaimer.

(21) Appl. No.: **10/682,293**

(22) Filed: **Oct. 9, 2003**

(65) **Prior Publication Data**

US 2004/0133081 A1 Jul. 8, 2004

Related U.S. Application Data

(60) Provisional application No. 60/417,163, filed on Oct. 9, 2002.

(51) **Int. Cl.**
A61B 5/00 (2006.01)

(52) **U.S. Cl.** **600/301**; 600/595; 600/547; 600/549; 128/921

(58) **Field of Classification Search** 600/300, 600/301; 128/903–905, 920
See application file for complete search history.

(56) **References Cited**

U.S. PATENT DOCUMENTS

4,031,365	A	6/1977	Raggiotti et al.
4,052,979	A	10/1977	Scherr et al.
4,129,125	A	12/1978	Lester et al.
4,148,304	A	4/1979	Mull
4,151,831	A	5/1979	Lester
4,192,000	A	3/1980	Lipsey

(Continued)

FOREIGN PATENT DOCUMENTS

DE 198 32 361 A1 2/2000

(Continued)

OTHER PUBLICATIONS

Georgia Tech. "Smart T-shirt," Georgia Institute of Technology Press Release, Nov. 14, 1997.

(Continued)

Primary Examiner — Henry M Johnson, III
Assistant Examiner — Kai Rajan
(74) *Attorney, Agent, or Firm* — GTC Law Group LLP & Affiliates; John A. Monocello, III

(57) **ABSTRACT**

Various methods and apparatuses for measuring a state parameter of an individual using signals based on one or more sensors are disclosed. In one embodiment, a first set of signals is used in a first function to determine how a second set of signals is used in one or more second functions to predict the state parameter. In another embodiment, first and second functions are used where the state parameter or an indicator of the state parameter may be obtained from a relationship between the first function and the second function. The state parameter may, for example, include calories consumed or calories burned by the individual. Various methods for making such apparatuses are also disclosed.

25 Claims, 47 Drawing Sheets

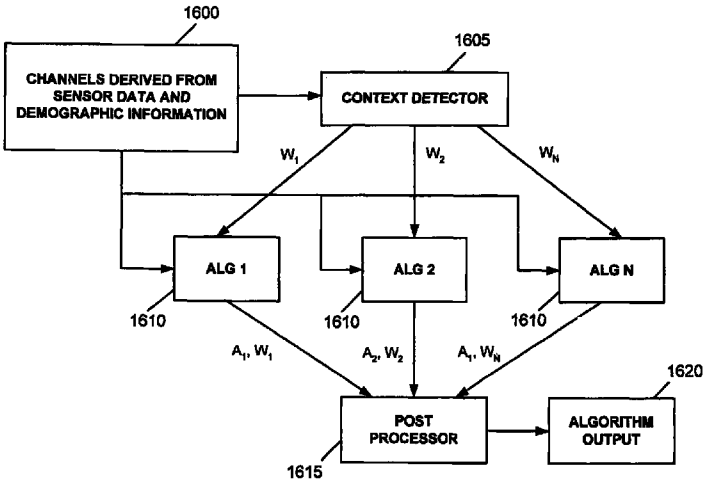

U.S. PATENT DOCUMENTS

4,364,398	A		12/1982	Sassi et al.
4,377,171	A		3/1983	Wada
4,407,295	A		10/1983	Steuer et al.
4,488,558	A		12/1984	Simbruner et al.
4,509,531	A		4/1985	Ward
4,531,527	A		7/1985	Reinhold, Jr. et al.
4,539,994	A		9/1985	Baumbach et al.
4,557,273	A		12/1985	Stoller et al.
4,608,987	A		9/1986	Mills
4,622,979	A		11/1986	Katchis et al.
4,672,977	A		6/1987	Kroll
4,676,254	A		6/1987	Frohn
4,757,453	A		7/1988	Nasiff
RE32,758	E		10/1988	Zartmann
4,784,162	A		11/1988	Ricks et al.
4,803,625	A		2/1989	Fu et al.
4,819,860	A		4/1989	Hargrove et al.
4,827,943	A		5/1989	Bornn et al.
4,828,257	A		5/1989	Dyer et al.
4,883,063	A		11/1989	Bernard et al.
4,891,756	A		1/1990	Williams, III
4,917,108	A		4/1990	Mault
4,958,645	A		9/1990	Cadell et al.
4,966,154	A		10/1990	Cooper et al.
4,981,139	A		1/1991	Pfohl
5,007,427	A		4/1991	Suzuki et al.
5,012,411	A		4/1991	Policastro
5,027,824	A		7/1991	Dougherty et al.
5,038,792	A		8/1991	Mault
5,040,541	A		8/1991	Poppendiek
5,050,612	A		9/1991	Matsumura
5,072,458	A		12/1991	Suzuki
5,111,818	A		5/1992	Suzuki et al.
5,135,311	A		8/1992	Alpert
5,148,002	A		9/1992	Kuo et al.
5,178,155	A		1/1993	Mault
5,179,958	A		1/1993	Mault
5,216,599	A		6/1993	Uebe et al.
5,224,479	A		7/1993	Sekine
5,263,491	A	*	11/1993	Thornton 600/587
5,285,398	A		2/1994	Janik
5,305,244	A		4/1994	Newman et al.
5,335,664	A		8/1994	Nagashima
5,353,793	A		10/1994	Bornn
5,410,471	A		4/1995	Alyfuku et al.
5,435,315	A		7/1995	McPhee et al.
5,445,149	A		8/1995	Rotolo et al.
5,458,123	A		10/1995	Unger
5,469,861	A		11/1995	Piscopo et al.
5,474,090	A		12/1995	Begun et al.
5,476,103	A		12/1995	Nashner
5,484,389	A		1/1996	Stark et al.
5,491,651	A		2/1996	Janik
5,507,288	A		4/1996	Bocker et al.
5,511,553	A		4/1996	Segalowitz
5,515,858	A		5/1996	Myllymaki
5,515,865	A		5/1996	Scanlon
5,524,618	A		6/1996	Pottgen et al.
5,555,490	A		9/1996	Carroll
5,559,497	A		9/1996	Hong
5,564,429	A		10/1996	Bornn et al.
5,566,679	A		10/1996	Herriott
5,581,238	A		12/1996	Chang et al.
5,581,492	A		12/1996	Janik
5,583,758	A		12/1996	McIlroy et al.
5,611,085	A		3/1997	Rasmussen
5,616,504	A		4/1997	Brown et al.
5,617,477	A		4/1997	Boyden
5,622,180	A		4/1997	Tammi et al.
5,645,068	A		7/1997	Mezack et al.
5,652,570	A		7/1997	Lepkofker
5,663,703	A		9/1997	Pearlman et al.
5,666,096	A		9/1997	Van Zeeland
5,670,944	A		9/1997	Myllymaki
5,673,691	A		10/1997	Abrams et al.
5,673,692	A		10/1997	Schulze et al.
5,686,516	A		11/1997	Tzur
5,687,734	A		11/1997	Dempsey et al.
5,697,791	A		12/1997	Nashner et al.
5,701,894	A	*	12/1997	Cherry et al. 600/300
5,704,350	A		1/1998	Williams, III
5,719,743	A		2/1998	Jenkins et al.
5,724,025	A		3/1998	Tavori
5,726,631	A		3/1998	Lin
5,729,203	A		3/1998	Oka et al.
5,730,140	A		3/1998	Fitch
5,738,104	A		4/1998	Lo et al.
5,741,217	A		4/1998	Gero
5,752,976	A		5/1998	Duffin et al.
5,771,001	A		6/1998	Cobb
5,778,345	A		7/1998	McCartney et al.
5,778,882	A		7/1998	Raymond et al.
5,798,907	A		8/1998	Janik
5,803,915	A		9/1998	Kremenchugsky et al.
5,813,766	A		9/1998	Chen
5,813,994	A		9/1998	Pottgen et al.
5,823,975	A		10/1998	Stark et al.
5,827,180	A		10/1998	Goodman
5,828,943	A		10/1998	Brown
5,832,296	A		11/1998	Wang et al.
5,832,448	A		11/1998	Brown
5,836,300	A		11/1998	Mault
5,839,901	A	*	11/1998	Karkanen 434/127
5,853,005	A		12/1998	Scanlon
5,855,550	A		1/1999	Lai et al.
5,857,939	A		1/1999	Kaufmann
5,857,967	A		1/1999	Frid et al.
5,862,803	A		1/1999	Besson et al.
5,865,733	A		2/1999	Malinouskas et al.
5,868,669	A		2/1999	Iliff
5,868,671	A		2/1999	Mahoney
5,871,451	A		2/1999	Unger et al.
5,876,350	A		3/1999	Lo et al.
5,879,163	A		3/1999	Brown et al.
5,879,309	A		3/1999	Johnson et al.
5,884,198	A		3/1999	Kese et al.
5,888,172	A		3/1999	Andrus et al.
5,897,493	A		4/1999	Brown
5,899,855	A		5/1999	Brown
5,902,250	A		5/1999	Verrier et al.
5,908,396	A		6/1999	Hayakawa et al.
5,912,865	A		6/1999	Ortega
5,913,310	A		6/1999	Brown
5,919,141	A		7/1999	Money et al.
5,929,782	A		7/1999	Stark et al.
5,931,791	A		8/1999	Saltzstein et al.
5,933,136	A		8/1999	Brown
5,941,837	A		8/1999	Amano et al.
5,951,300	A		9/1999	Brown
5,956,501	A		9/1999	Brown
5,957,854	A		9/1999	Besson et al.
5,959,529	A		9/1999	Kail et al.
5,959,611	A		9/1999	Smailagic et al.
5,960,380	A		9/1999	Flentov et al.
5,960,403	A		9/1999	Brown
5,976,083	A		11/1999	Richardson et al.
5,989,157	A		11/1999	Walton et al.
6,030,342	A		2/2000	Amano
6,032,119	A		2/2000	Brown et al.
6,047,203	A		4/2000	Sackner et al.
6,053,872	A		4/2000	Mohler
6,059,692	A		5/2000	Hickman
6,067,468	A		5/2000	Korenman et al.
6,091,973	A		7/2000	Colla et al.
6,095,949	A		8/2000	Arai et al.
6,101,407	A		8/2000	Groezinger
6,101,478	A		8/2000	Brown
6,126,595	A		10/2000	Amano et al.
6,135,107	A		10/2000	Mault
6,138,079	A		10/2000	Putnam
6,154,668	A		11/2000	Pedersen et al.
6,168,563	B1		1/2001	Brown
6,184,797	B1		2/2001	Stark et al.
6,190,314	B1		2/2001	Ark et al.
6,198,394	B1		3/2001	Jacobsen et al.
6,208,900	B1		3/2001	Ecker et al.
6,221,011	B1		4/2001	Bardy et al.

6,225,901	B1	5/2001	Kail, IV	
6,225,980	B1	5/2001	Weiss et al.	
6,240,323	B1	5/2001	Calenzo et al.	
6,247,647	B1	6/2001	Courtney et al.	
6,248,065	B1	6/2001	Brown	
6,251,048	B1	6/2001	Kaufman	
6,254,536	B1	7/2001	DeVito	
6,265,978	B1	7/2001	Atlas	
6,266,623	B1	7/2001	Vock et al.	
6,285,897	B1	9/2001	Kilcoyne et al.	
6,287,252	B1	9/2001	Lugo	
6,290,646	B1	9/2001	Cosentino et al.	
6,290,650	B1	9/2001	Butterfield et al.	
6,292,698	B1	9/2001	Duffin et al.	
6,298,218	B1	10/2001	Lowe et al.	
6,302,844	B1	10/2001	Walker et al.	
6,306,088	B1	10/2001	Krausman et al.	
6,312,363	B1	11/2001	Watterson et al.	
6,315,719	B1	11/2001	Rode et al.	
6,327,495	B1	12/2001	Iwabuchi	
6,336,900	B1	1/2002	Alleckson et al.	
6,339,720	B1	1/2002	Anzellini et al.	
6,341,229	B1	1/2002	Akiva	
6,364,834	B1	4/2002	Reuss et al.	
6,366,871	B1	4/2002	Geva	
6,368,287	B1	4/2002	Hadas	
6,371,123	B1	4/2002	Stark et al.	
6,377,162	B1	4/2002	Delestienne et al.	
6,385,473	B1	5/2002	Haines et al.	
6,416,471	B1	7/2002	Kumar et al.	
6,420,959	B1	7/2002	Lizzi	
6,450,922	B1	9/2002	Henderson et al.	
6,450,953	B1	9/2002	Place et al.	
6,454,707	B1	9/2002	Casscells, III	
6,454,708	B1	9/2002	Ferguson et al.	
6,466,232	B1	10/2002	Newell et al.	
6,468,222	B1	10/2002	Mault et al.	
6,478,736	B1	11/2002	Mault	
6,494,829	B1	12/2002	New, Jr. et al.	
6,513,532	B2	2/2003	Mault et al.	
6,514,200	B1	2/2003	Khouri et al.	
6,516,289	B2	2/2003	David	
6,527,711	B1	3/2003	Stivoric et al.	
6,532,381	B2	3/2003	Bayer et al.	
6,533,731	B2	3/2003	Pottgen et al.	
6,539,336	B1	3/2003	Vock et al.	
6,547,745	B1	4/2003	Rubinstein et al.	
6,551,251	B2	4/2003	Zuckerwar et al.	
6,551,252	B2	4/2003	Sackner et al.	
6,553,251	B1	4/2003	Lahdesmaki	
6,558,320	B1	5/2003	Causey et al.	
6,569,094	B2	5/2003	Suzuki	
6,571,200	B1	5/2003	Mault	
6,579,231	B1	6/2003	Phipps	
6,584,344	B2	6/2003	Hannula	
6,595,929	B2	7/2003	Stivoric et al.	
6,597,944	B1	7/2003	Hadas	
6,602,191	B2	8/2003	Quy	
6,605,038	B1	8/2003	Teller et al.	
6,607,484	B2	8/2003	Suzuki	
6,610,012	B2	8/2003	Mault	
6,611,206	B2 *	8/2003	Eshelman et al.	340/573.1
6,616,613	B1	9/2003	Goodman et al.	
6,635,015	B2	10/2003	Sagel	
6,656,125	B2	12/2003	Misczynski et al.	
6,665,559	B2	12/2003	Rowlandson	
6,690,959	B2	2/2004	Thompson	
6,694,182	B1 *	2/2004	Yamazaki et al.	600/547
6,712,615	B2	3/2004	Martin	
6,734,802	B2	5/2004	Halleck et al.	
6,755,795	B2	6/2004	Mammaropoulos et al.	
6,790,178	B1	9/2004	Mault et al.	
6,808,473	B2	10/2004	Hisano et al.	
6,817,979	B2 *	11/2004	Nihtila	600/300
6,834,436	B2 *	12/2004	Townsend et al.	33/512
6,842,877	B2	1/2005	Robarts et al.	
6,852,085	B2	2/2005	Rubinstein	
6,874,127	B2	3/2005	Newell et al.	
6,920,348	B2	7/2005	Vasin et al.	
6,942,615	B2	9/2005	Suzuki	
6,959,259	B2	10/2005	Vock et al.	
6,968,375	B1	11/2005	Brown	
7,020,508	B2	3/2006	Stivoric et al.	
7,073,129	B1	7/2006	Robarts et al.	
7,092,846	B2	8/2006	Vock et al.	
7,144,151	B2	12/2006	Saaski et al.	
7,171,331	B2	1/2007	Vock et al.	
7,191,183	B1	3/2007	Goldstein et al.	
7,222,054	B2	5/2007	Geva	
7,261,690	B2	8/2007	Teller et al.	
7,285,090	B2	10/2007	Stivoric	
7,330,818	B1	2/2008	Ladocsi et al.	
7,454,002	B1	11/2008	Gardner et al.	
7,485,095	B2	2/2009	Shusterman	
7,502,643	B2	3/2009	Farringdon et al.	
7,676,384	B2	3/2010	Baker et al.	
2001/0029340	A1	10/2001	Mault et al.	
2001/0032059	A1	10/2001	Kelly, Jr. et al.	
2001/0044581	A1	11/2001	Mault	
2001/0044588	A1	11/2001	Mault et al.	
2001/0049470	A1	12/2001	Mault et al.	
2001/0056229	A1	12/2001	Cosentino et al.	
2002/0013717	A1	1/2002	Ando et al.	
2002/0019296	A1	2/2002	Freeman et al.	
2002/0019585	A1	2/2002	Dickinson et al.	
2002/0019586	A1	2/2002	Teller et al.	
2002/0027164	A1	3/2002	Mault	
2002/0028988	A1	3/2002	Suzuki et al.	
2002/0028995	A1	3/2002	Mault	
2002/0032386	A1	3/2002	Sackner et al.	
2002/0055857	A1	5/2002	Mault et al.	
2002/0062069	A1	5/2002	Mault et al.	
2002/0107450	A1	8/2002	Ogura	
2002/0109600	A1	8/2002	Mault	
2002/0111539	A1	8/2002	Cosentino et al.	
2002/0128804	A1	9/2002	Geva	
2002/0133378	A1	9/2002	Mault et al.	
2002/0169634	A1	11/2002	Nishi et al.	
2002/0180973	A1	12/2002	MacKinnon et al.	
2003/0013072	A1 *	1/2003	Thomas	434/247
2003/0040002	A1	2/2003	Ledley et al.	
2003/0055460	A1	3/2003	Owen et al.	
2003/0069510	A1	4/2003	Semler	
2003/0083559	A1	5/2003	Thompson	
2003/0092975	A1	5/2003	Casscells, III	
2003/0152607	A1	8/2003	Mault	
2003/0176797	A1	9/2003	Anzellini	
2003/0208113	A1	11/2003	Mault et al.	
2004/0039605	A1	2/2004	Bardy et al.	
2004/0102931	A1 *	5/2004	Ellis et al.	702/188
2004/0122702	A1	6/2004	Sabol et al.	
2004/0158710	A1	8/2004	Buer et al.	
2004/0172290	A1	9/2004	Leven et al.	
2004/0229685	A1	11/2004	Smith et al.	
2004/0230549	A1	11/2004	Freer et al.	
2005/0049022	A1	3/2005	Mullen et al.	
2005/0055330	A1	3/2005	Britton et al.	
2005/0070778	A1	3/2005	Lackey et al.	
2005/0099294	A1	5/2005	Bogner et al.	
2005/0101841	A9	5/2005	Kaylor et al.	
2005/0115561	A1	6/2005	Stahmann et al.	
2005/0131736	A1	6/2005	Nelson et al.	
2005/0226310	A1	10/2005	Nakazawa et al.	
2005/0245839	A1	11/2005	Stivoric et al.	
2006/0026205	A1	2/2006	Butterfield et al.	
2006/0031102	A1	2/2006	Teller et al.	
2006/0123053	A1	6/2006	Scannell et al.	
2006/0235280	A1	10/2006	Vonk et al.	
2006/0292921	A1	12/2006	Dahms et al.	
2007/0112598	A1	5/2007	Heckerman et al.	
2008/0154821	A1	6/2008	Poulin et al.	

FOREIGN PATENT DOCUMENTS

DE	199 11 766	A1	9/2000
EP	0670064	B1	11/1993
EP	0707825	A2	4/1996
EP	0880936	A3	3/1999
GB	2203250		10/1988

GB	2322952	A	5/1997
JP	4341243		11/1992
JP	09056705		3/1997
JP	2002095637		4/2002
KR	200244874		2/2003
WO	93/01574		1/1993
WO	94/25841		11/1994
WO	9525946		9/1995
WO	97/06499		2/1997
WO	98/50873		11/1998
WO	9859227		12/1998
WO	99/27483		6/1999
WO	00/11578		3/2000
WO	00/26882		5/2000
WO	00/32098		6/2000
WO	00/47108		8/2000
WO	00/51543		9/2000
WO	00/52604		9/2000
WO	01/28495		10/2000
WO	01/52718		1/2001
WO	0101093		1/2001
WO	01/08554		2/2001
WO	01/56454		2/2001
WO	01/26535		4/2001
WO	01/26547		4/2001
WO	01/28416		4/2001
WO	01/82783		4/2001
WO	01/39089		5/2001
WO	01/82789		5/2001
WO	01/89365		5/2001
WO	01/89368		5/2001
WO	01/41645		6/2001
WO	0196986		12/2001
WO	02/051308		7/2002
WO	02/069798		9/2002
WO	02/093272		11/2002
WO	2005/046433		5/2005

OTHER PUBLICATIONS

Personal Health Monitor for Homes, Timo Tuomisto & Vesa Pentikainen, ERCIM News, No. 29, Apr. 1997.
CYBeR-CARE Internet Healthcare Technologies, BW Health Wire, Oct. 7, 1999.
"Nearer to the Heart," Brianna Krebs, Washington Post, Jan. 17, 1999.
"Portable Sensor Provides Remote Monitoring of Heart", Nikkei Weekly, Oct. 27, 1998.
"FDA Clears Dates—Ohmeda Pulse Oximeter," BW Health Wire, Dec. 3, 1998.
"Estee Soft New Version of LifeConnect," Business Wire, Jan. 20, 1999.
Matsushita Home Health Check System, The Nihon Keizai Shimbun, Dec. 17, 1998.
Warfighter Physiological Status Monitoring, MOMRP Fact Sheet No. 6, USAMRMC (1999) (downloaded from www.momrp.org).
"The H.J. Andrews Climatological Field Measurement Program," Henshaw, D. , Aug. 9, 1997 (downloaded from www.fsl.orst.edu).
"Ironman Speed and Distance System" (downloaded from www.timex.com), Timex, Oct. 4, 2002.
"Ironman Speed Distance System—Once Again Timex Revolutionizes the Sportwatch" (downloaded from www.timex.com), Timex, Jan. 8, 2002.
Polar M91ti Heart Rate Monitor Users Manual—Quick Guide, Polar Electro Inc., Nov. 2000.
Polar USA—Product Detail—M91ti (downloaded from www.polarusa.com), Polar USA, Oct. 4, 2002.
Polar USA—Product Detail—S-610 (downloaded from www.polarusa.com), Polar USA, Oct. 4, 2002.
Thermal Gap Fillers, Kent Young, Feb. 6, 2001 (article downloaded from www.chomerics.com).
Therm-A-Gap, Chomerics Technical Bulletin 70, Feb. 6, 2001.
CoolPoly, the Original Thermally Conductive Polymer, Feb. 7, 2001 (article downloaded from www.coolpolymers.com).
Micro-Foil Heat Flux Sensors, RdF Corporation Catalog No. HFS-A, Mar. 1998.
Industrial Micro-Foil Heat Flux Sensor, RdF Corporation Datasheet No. HFS-B, Oct. 1995.
Industrial/Commercial Micro-Foil Heat Flux Sensor, RdF Corporation Catalong No. HFS-C, Dec. 1999.
Lightweight Ambulatory Physiological Monitoring System, Ames Research Center, Moffett Field, CA (undated).
Weight Watchers TurnAround, Weight Watchers, 2004 (downloaded from www.weightwatchers.com).
Weight Loss Programs, Jenny Craig, 2004 (dowloaded from www.jennycraig.com).
The Complete Nutrition & Weight Management Solution Based on Your Unique Metabolic Fingerprint & Goals, BalanceLog, 2004 (downloaded from www.healthetech.com).
What is FitDay?, FitDay, 2004 (downloaded from www.fitday.com).
"A combined heart rate and movement sensor: proof of concept and preliminary testing study," K. Rennie, T. Rowsell, S.A. Jebb, D. Holburn & N.J. Wareham, 2000.

* cited by examiner

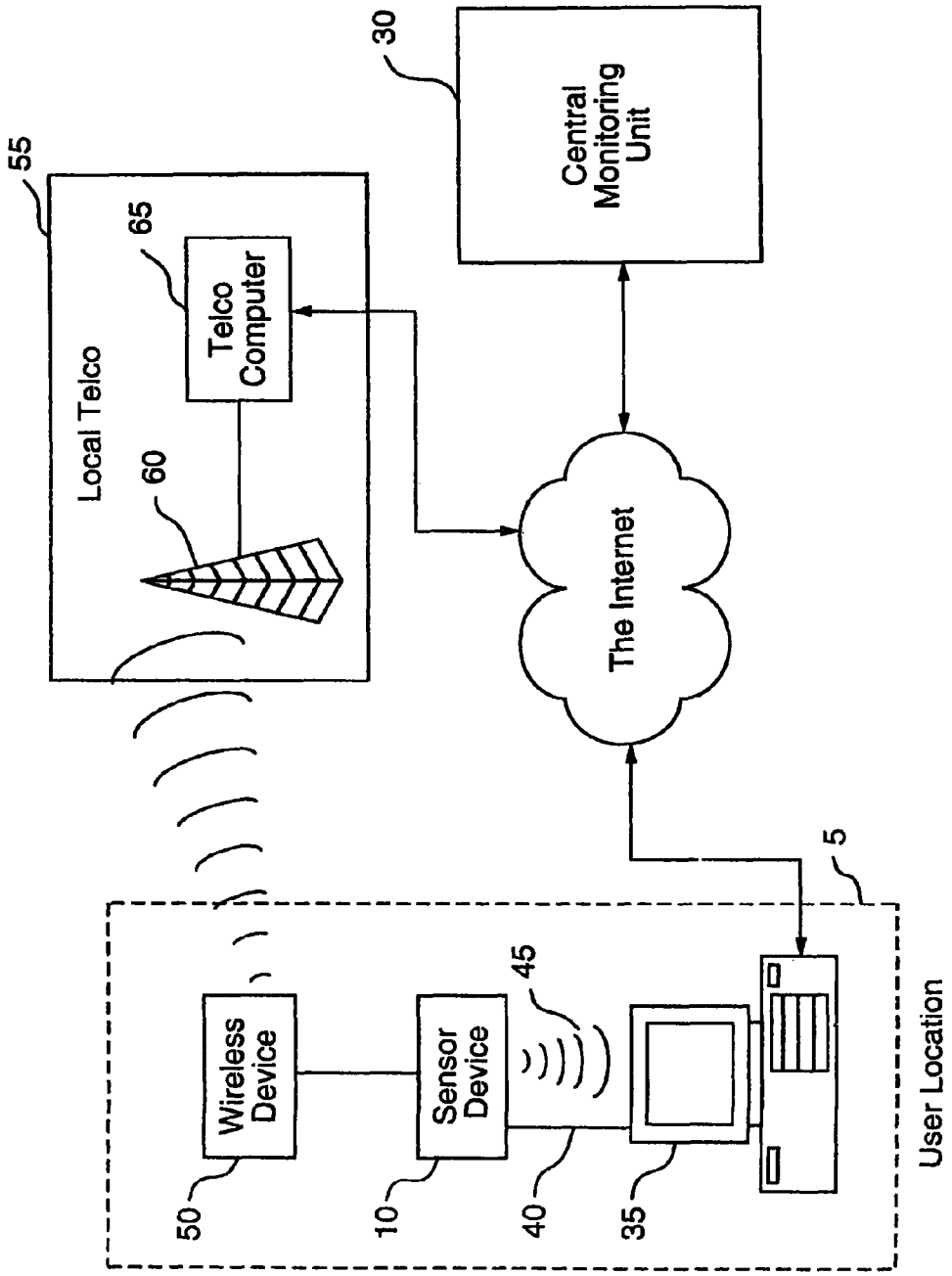
55
Local Telco
65
Telco Computer
60
30
Central Monitoring Unit
The Internet
5
User Location
Wireless Device
50
Sensor Device
10
45
40
35

FIG. 1

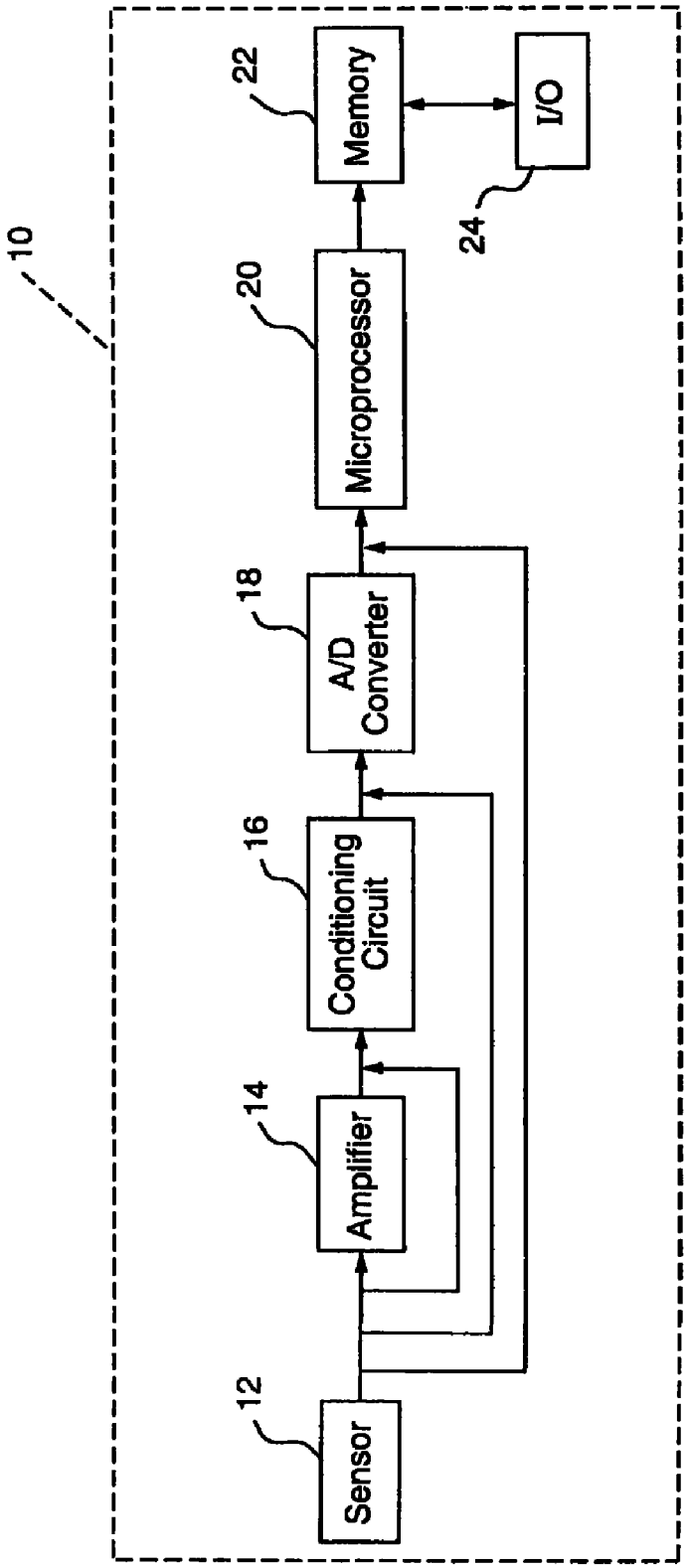
10
12
Sensor
14
Amplifier
16
Conditioning Circuit
18
A/D Converter
20
Microprocessor
22
Memory
24
I/O

FIG. 2

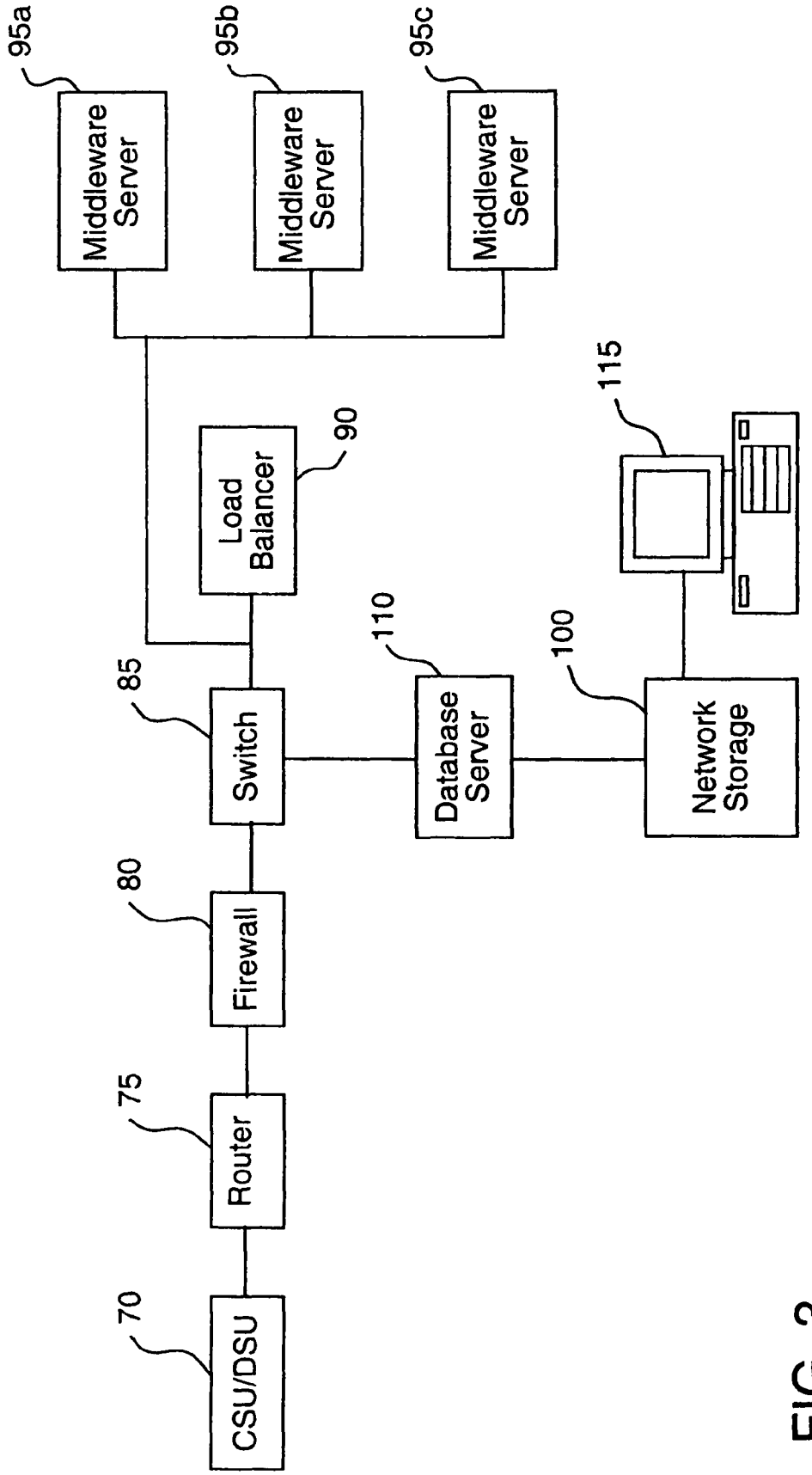
95a
Middleware Server
95b
Middleware Server
95c
Middleware Server
90
Load Balancer
85
Switch
80
Firewall
75
Router
70
CSU/DSU
110
Database Server
100
Network Storage
115

FIG. 3

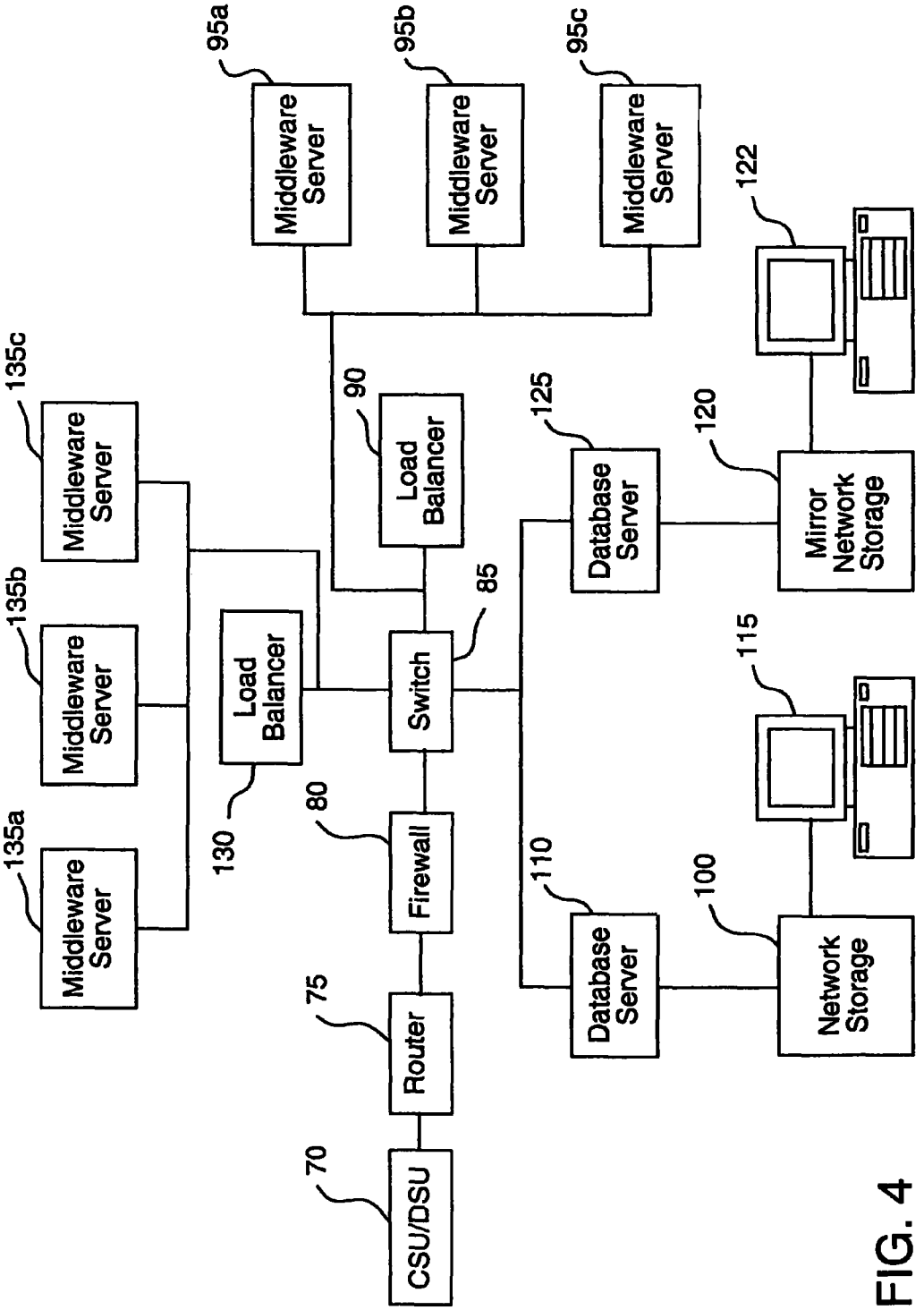
95a
Middleware Server
95b
Middleware Server
95c
Middleware Server
122
135c
Middleware Server
90
Load Balancer
125
Database Server
120
Mirror Network Storage
135b
Middleware Server
Load Balancer
85
Switch
115
130
80
Firewall
135a
Middleware Server
110
Database Server
100
Network Storage
75
Router
70
CSU/DSU

FIG. 4

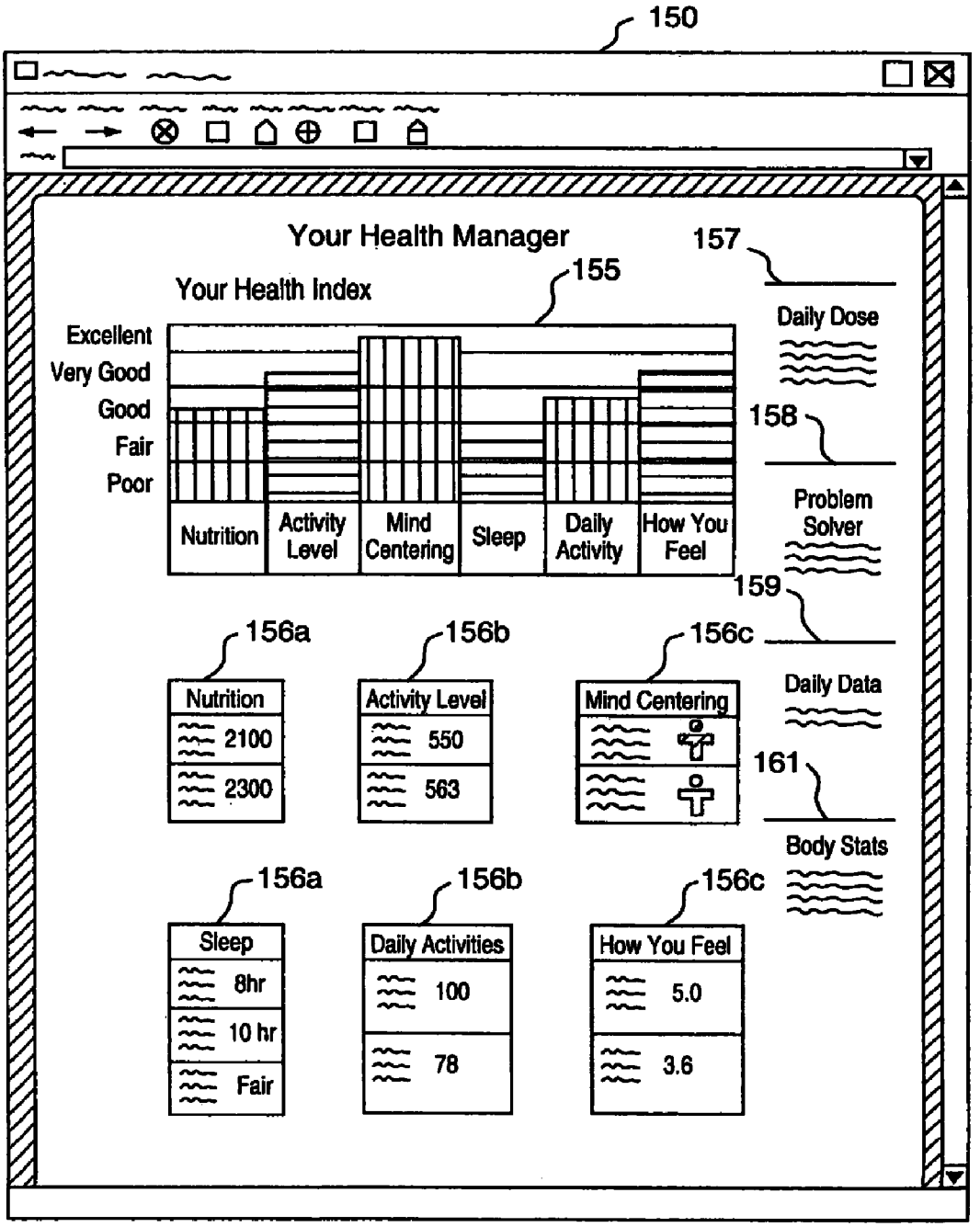
150
Your Health Manager
157
155
Your Health Index
Excellent
Very Good
Good
Fair
Poor
Nutrition
Activity Level
Mind Centering
Sleep
Daily Activity
How You Feel
Daily Dose
158
Problem Solver
159
156a
156b
156c
Nutrition
2100
2300
Activity Level
550
563
Mind Centering
Daily Data
161
Body Stats
156a
156b
156c
Sleep
8hr
10 hr
Fair
Daily Activities
100
78
How You Feel
5.0
3.6

FIG. 5

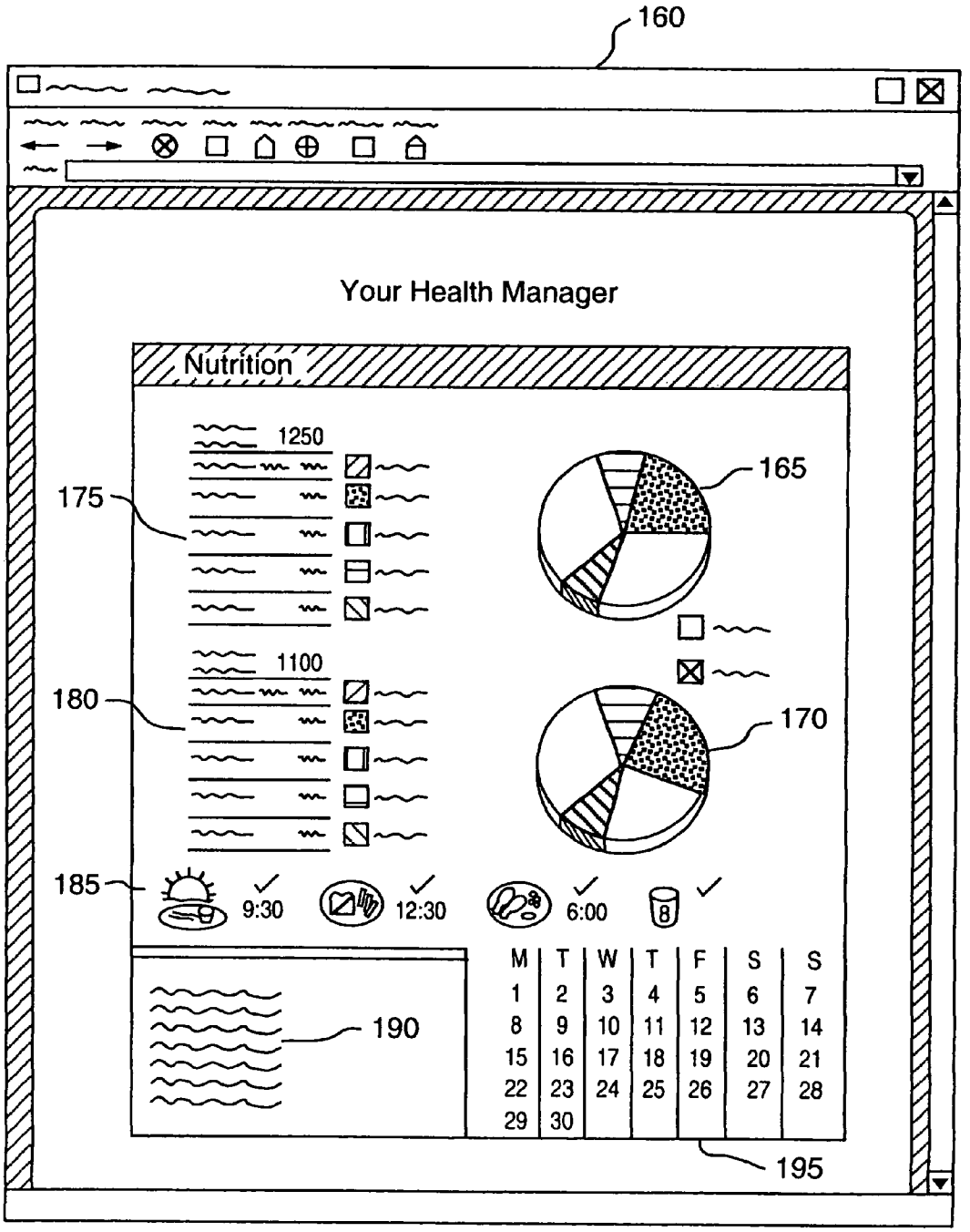
160
Your Health Manager
Nutrition
1250
175
165
1100
180
170
185
9:30
12:30
6:00
190
M T W T F S S
1 2 3 4 5 6 7
8 9 10 11 12 13 14
15 16 17 18 19 20 21
22 23 24 25 26 27 28
29 30
195

FIG. 6

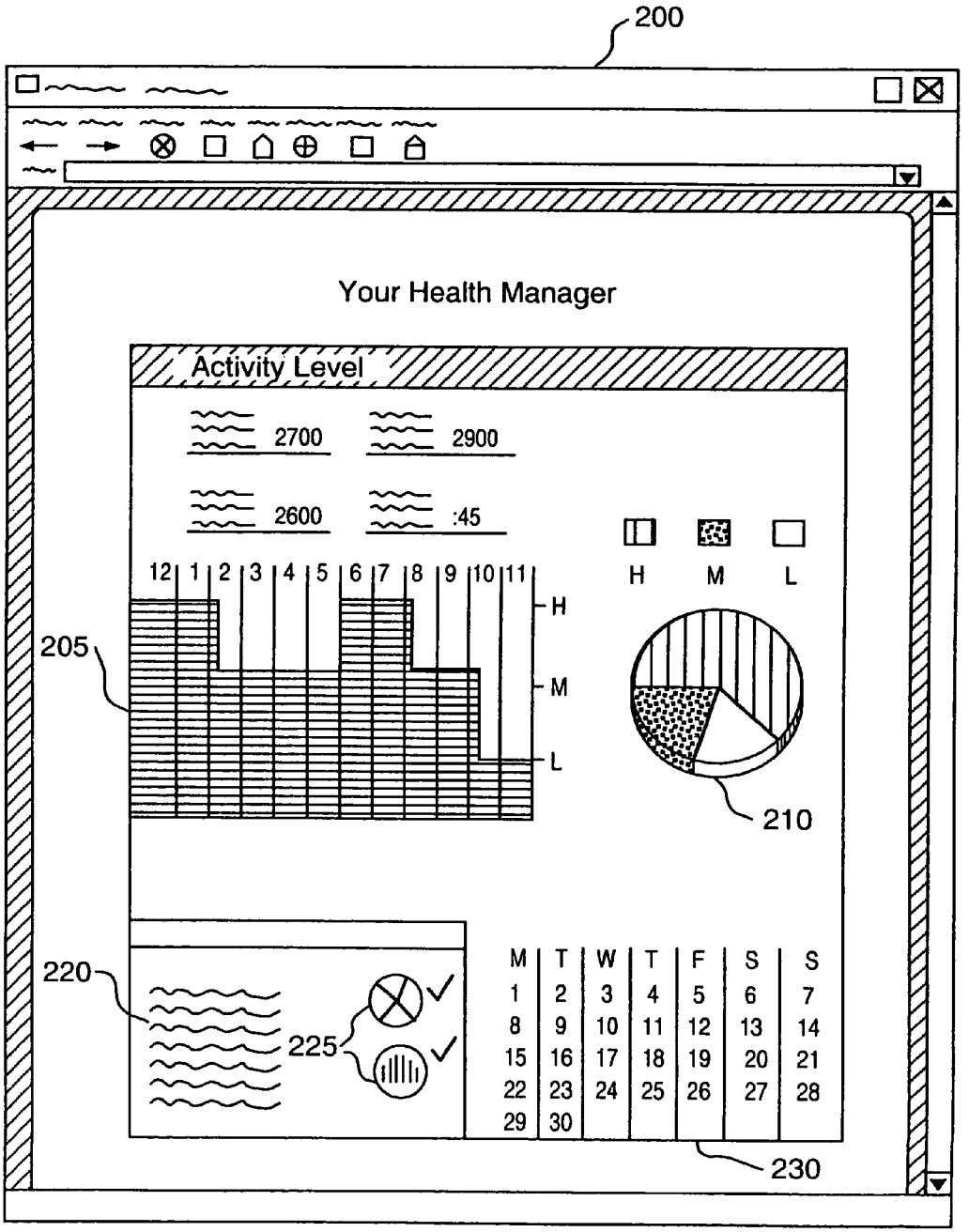
200
Your Health Manager
Activity Level
2700
2900
2600
:45
12 1 2 3 4 5 6 7 8 9 10 11
H
M
L
205
210
220
225
230
M T W T F S S
1 2 3 4 5 6 7
8 9 10 11 12 13 14
15 16 17 18 19 20 21
22 23 24 25 26 27 28
29 30

FIG. 7

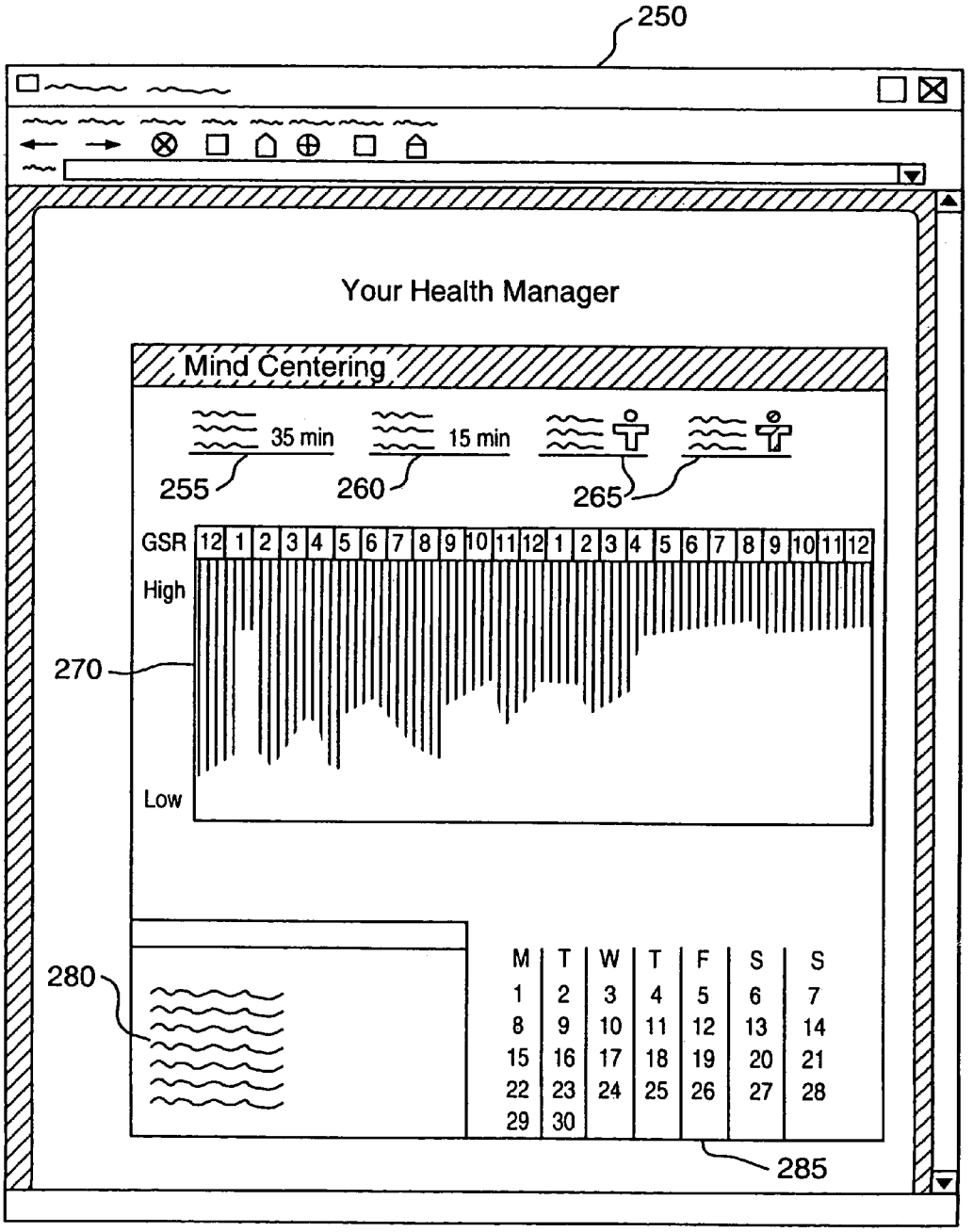
250
Your Health Manager
Mind Centering
35 min
15 min
255
260
265
GSR
12 1 2 3 4 5 6 7 8 9 10 11 12 1 2 3 4 5 6 7 8 9 10 11 12
High
Low
270
280
M T W T F S S
1 2 3 4 5 6 7
8 9 10 11 12 13 14
15 16 17 18 19 20 21
22 23 24 25 26 27 28
29 30
285

FIG. 8

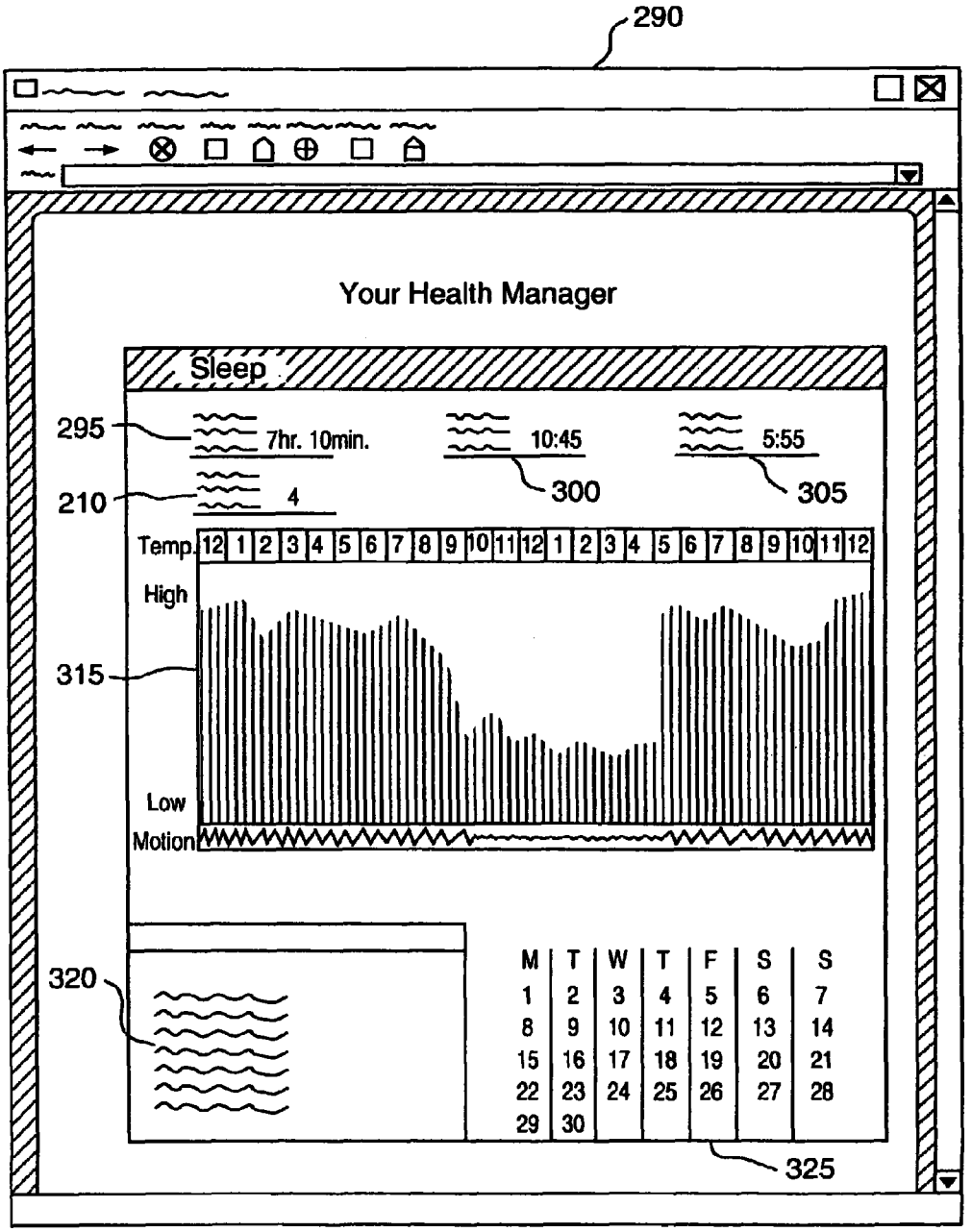
290
Your Health Manager
Sleep
295
7hr. 10min.
10:45
5:55
210
4
300
305
Temp.
12 1 2 3 4 5 6 7 8 9 10 11 12 1 2 3 4 5 6 7 8 9 10 11 12
High
315
Low
Motion
320
M T W T F S S
1 2 3 4 5 6 7
8 9 10 11 12 13 14
15 16 17 18 19 20 21
22 23 24 25 26 27 28
29 30
325

FIG. 9

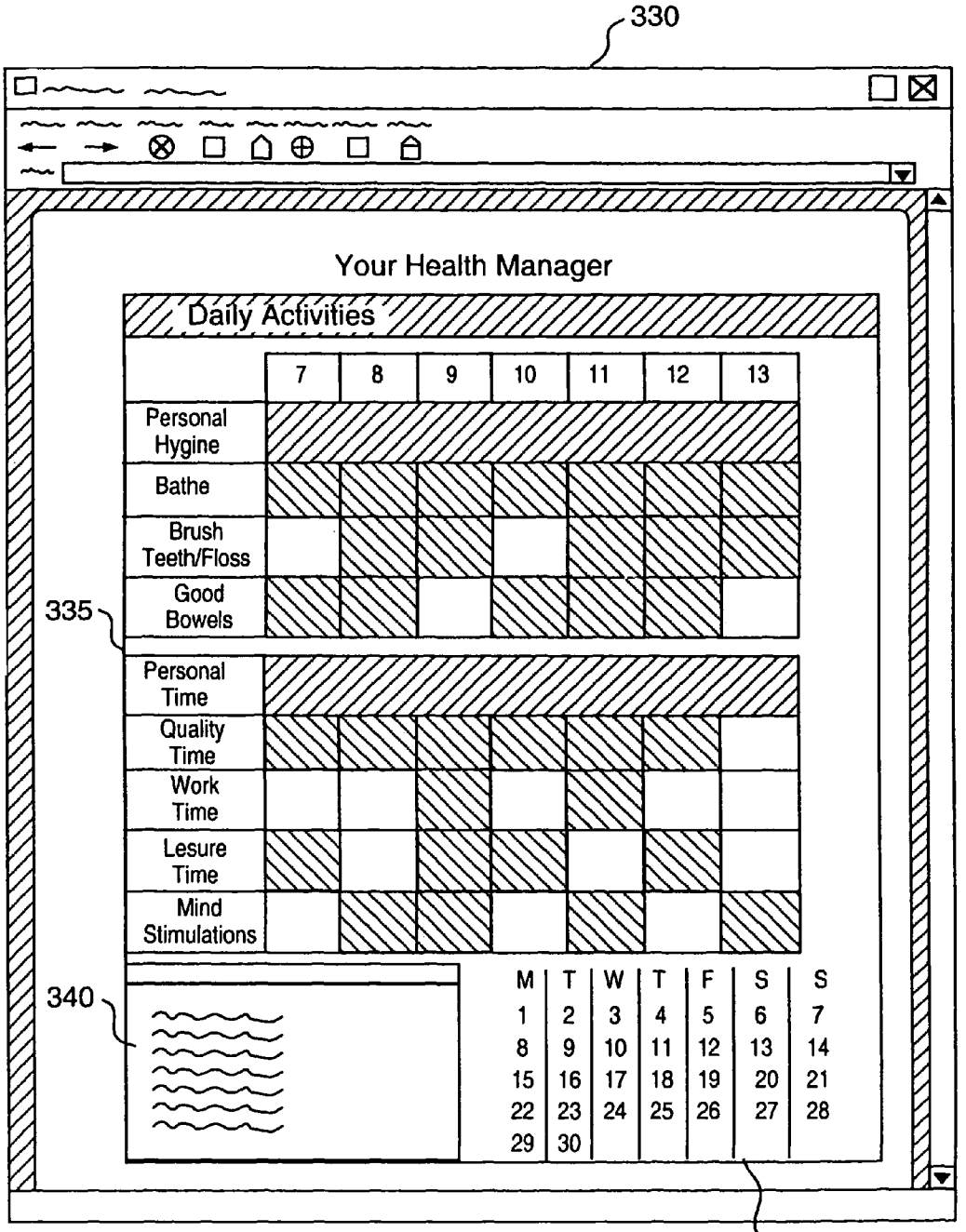
330
Your Health Manager
Daily Activities
7
8
9
10
11
12
13
Personal Hygine
Bathe
Brush Teeth/Floss
Good Bowels
335
Personal Time
Quality Time
Work Time
Lesure Time
Mind Stimulations
340
M T W T F S S
1 2 3 4 5 6 7
8 9 10 11 12 13 14
15 16 17 18 19 20 21
22 23 24 25 26 27 28
29 30
345

FIG. 10

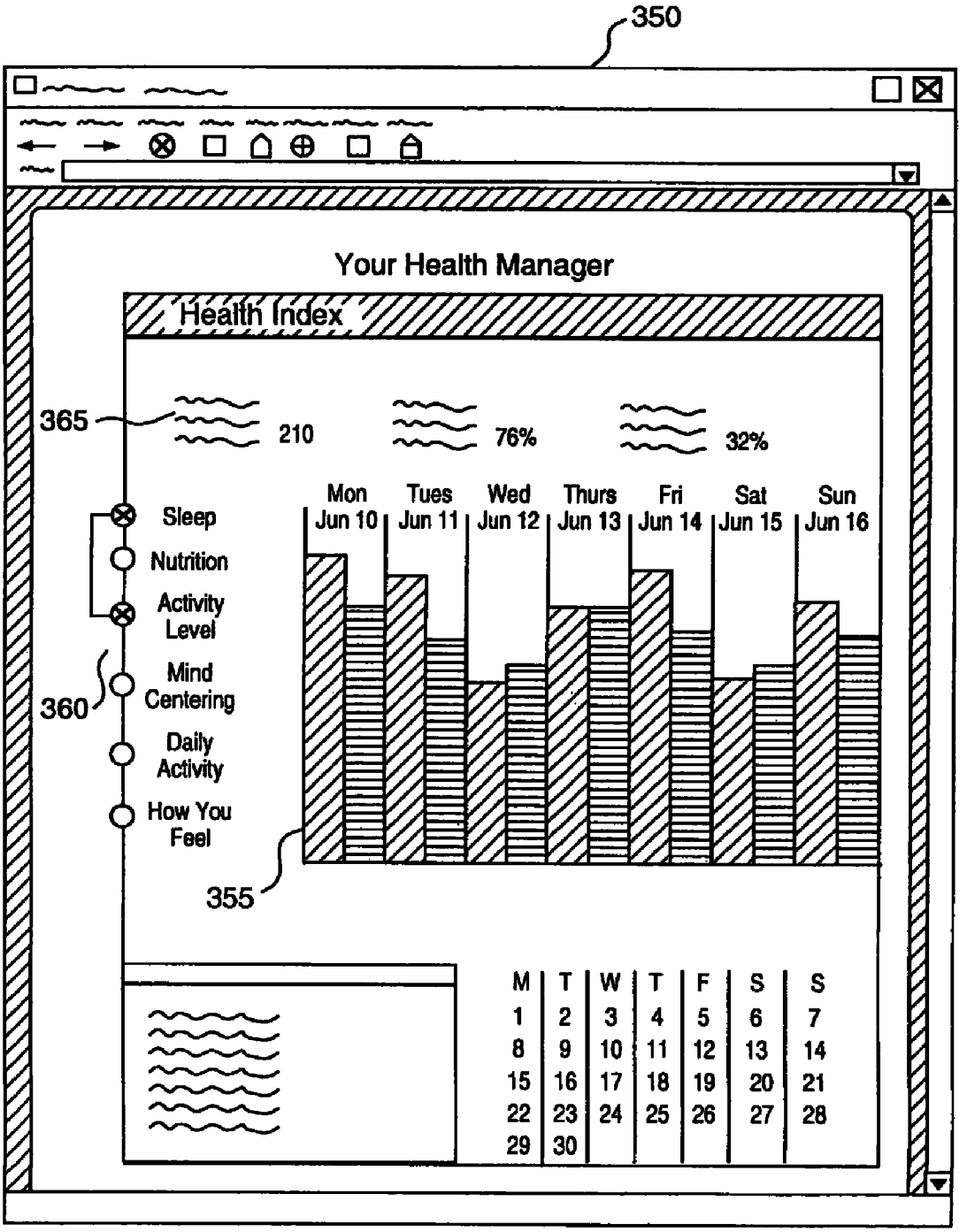
350
Your Health Manager
Health Index
365
210
76%
32%
Mon Jun 10
Tues Jun 11
Wed Jun 12
Thurs Jun 13
Fri Jun 14
Sat Jun 15
Sun Jun 16
Sleep
Nutrition
Activity Level
Mind Centering
360
Daily Activity
How You Feel
355
M T W T F S S
1 2 3 4 5 6 7
8 9 10 11 12 13 14
15 16 17 18 19 20 21
22 23 24 25 26 27 28
29 30

FIG. 11

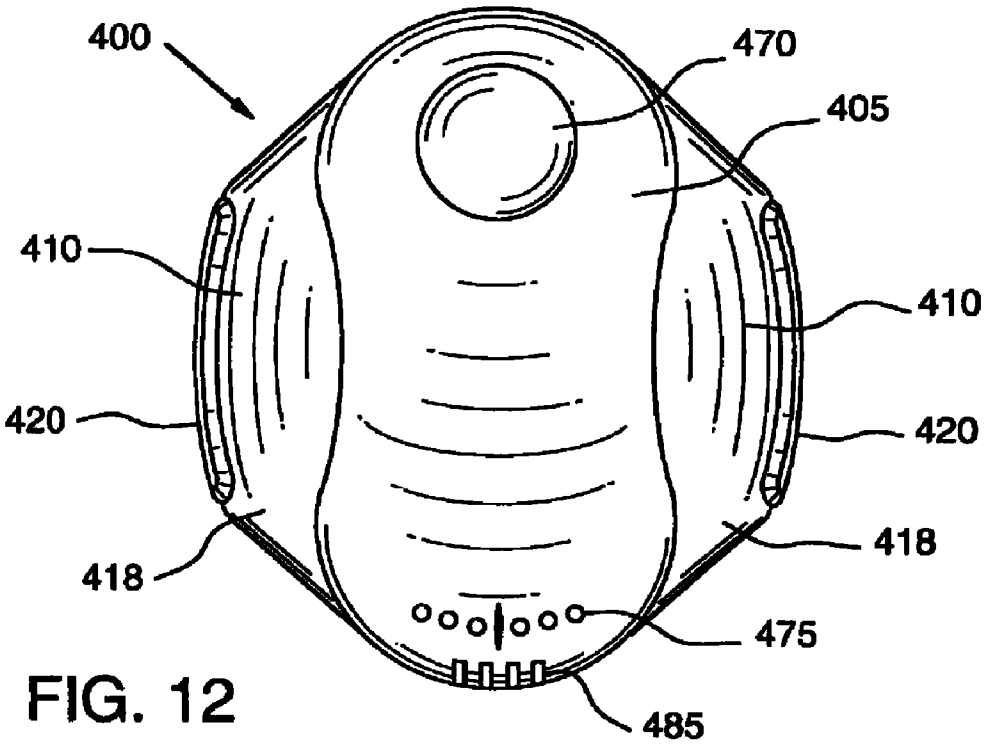
400
470
405
410
410
420
420
418
418
475
485

FIG. 12

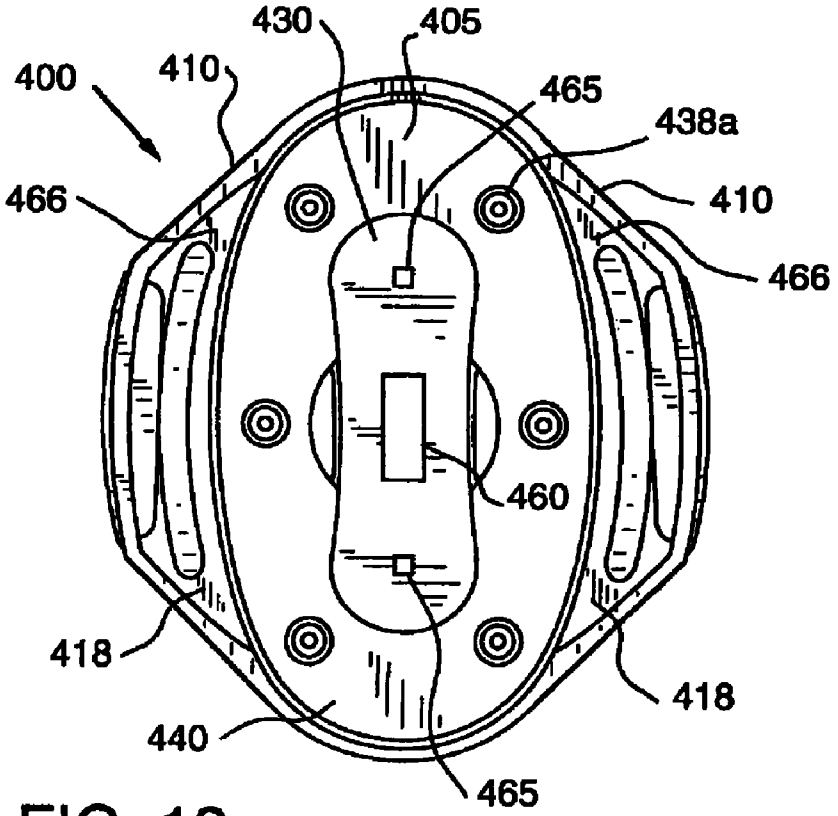
430
405
400
410
465
438a
466
410
466
460
418
418
440
465

FIG. 13

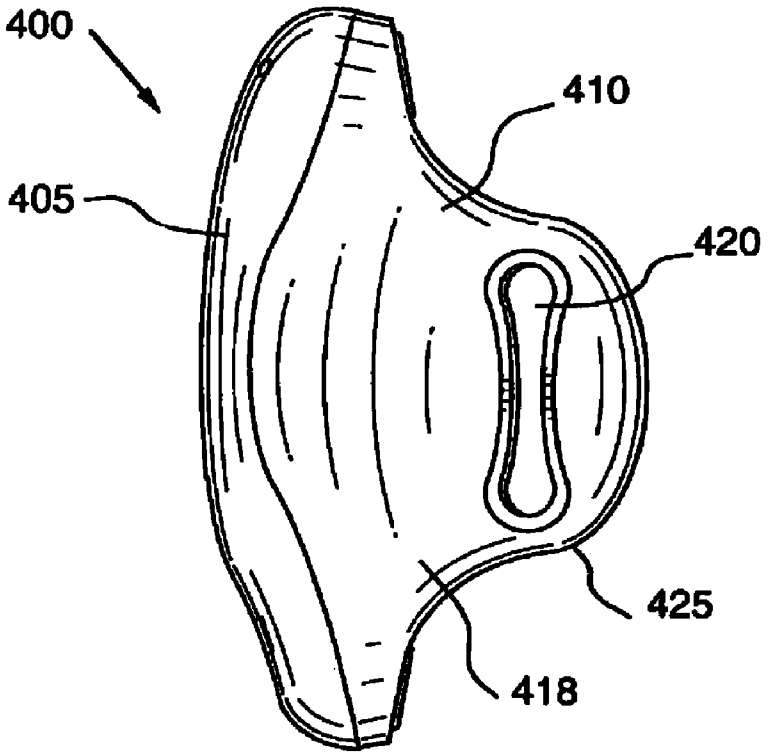
400
410
405
420
425
418

FIG. 14

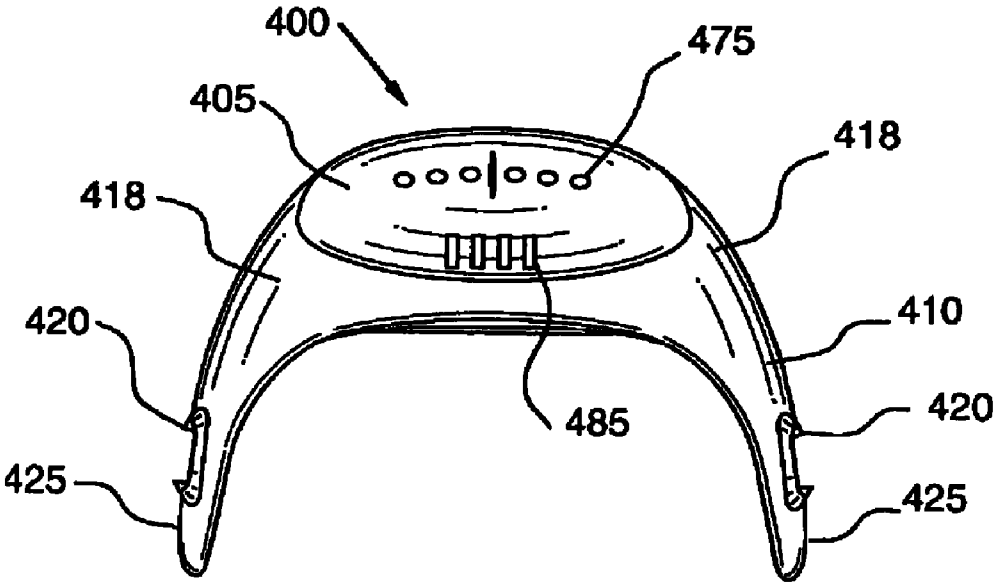
400
475
405
418
418
420
410
485
420
425
425

FIG. 15

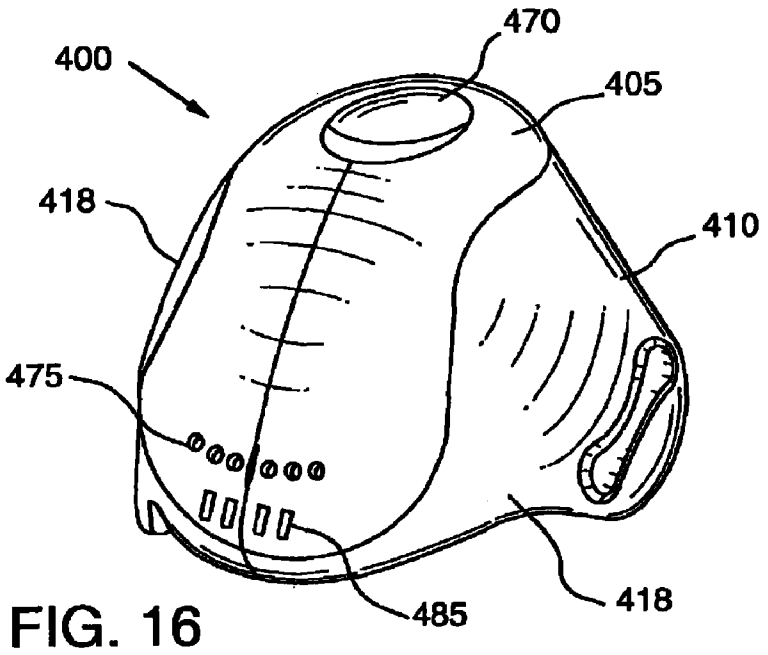
400
470
405
418
410
475
485
418

FIG. 16

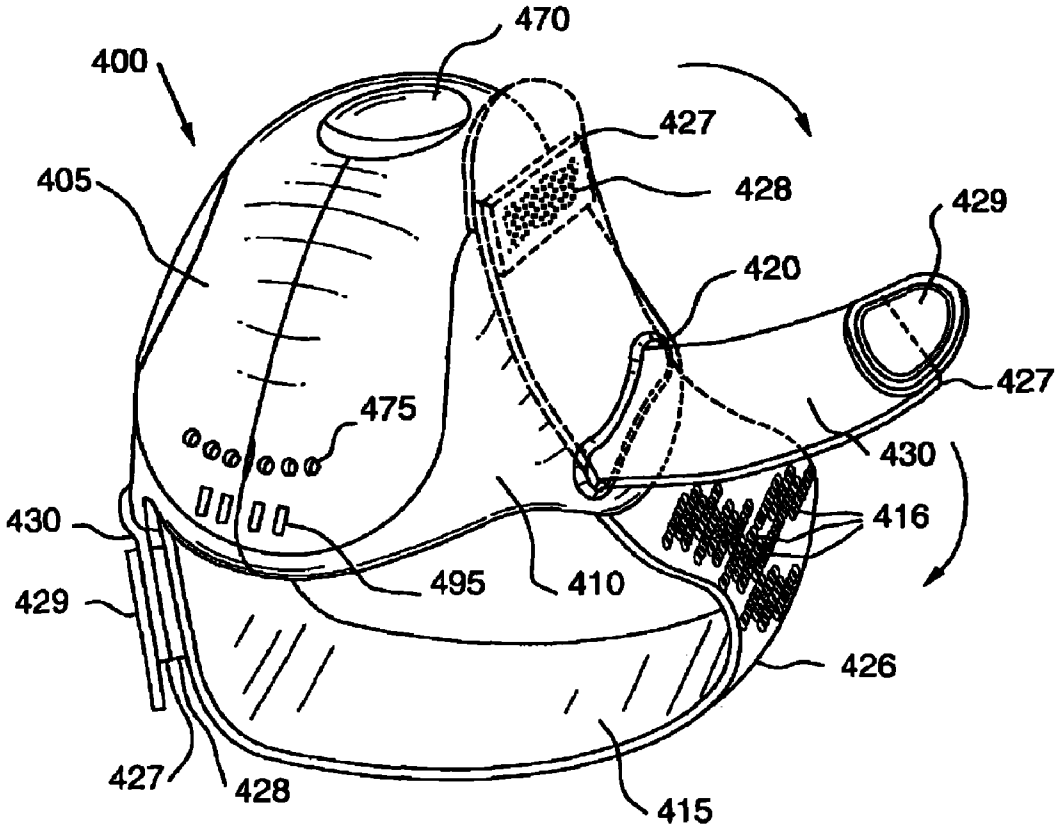
400
470
427
405
428
429
420
427
475
430
430
416
429
495
410
426
427
428
415

FIG. 17

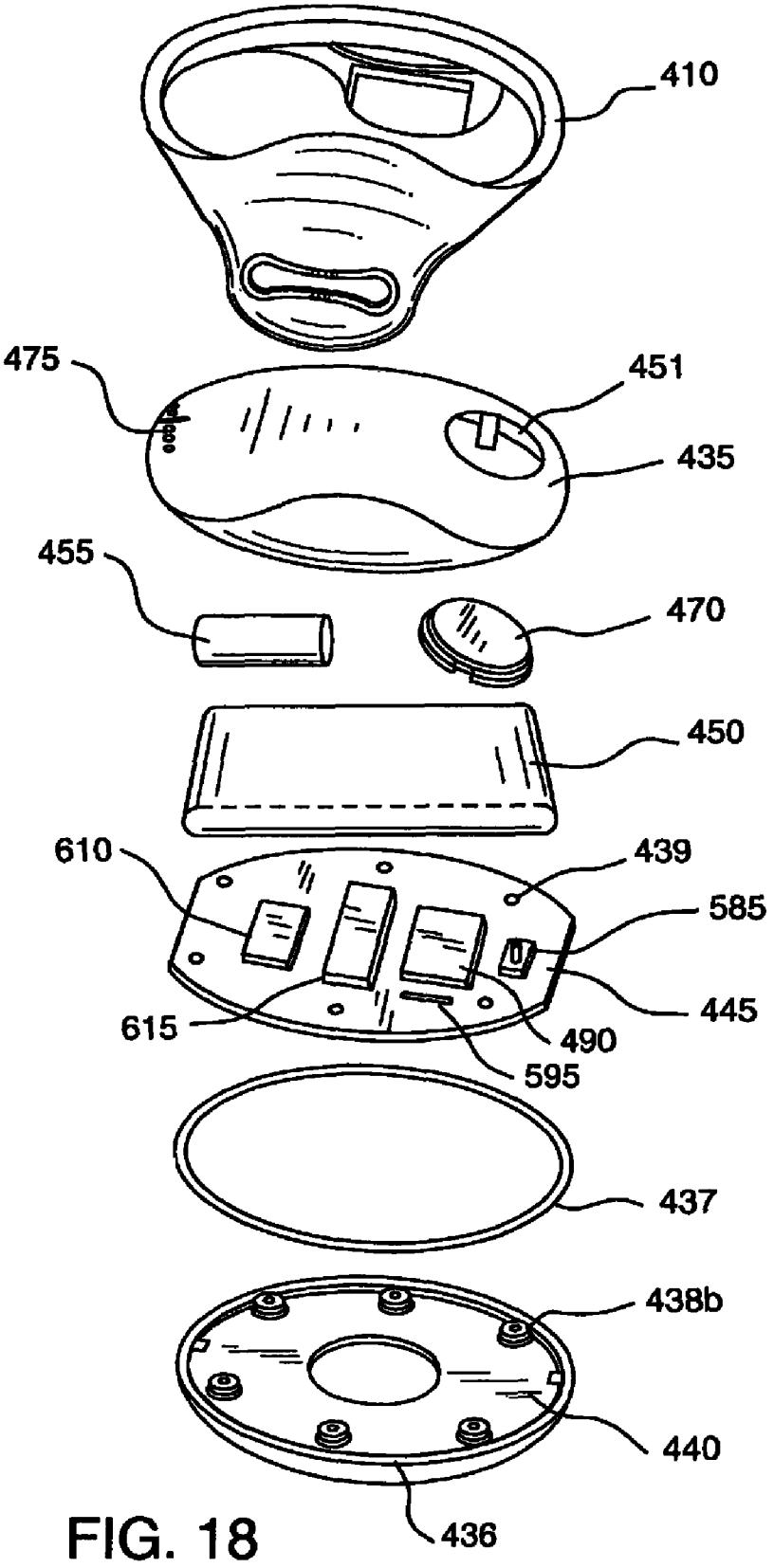
410
475
451
435
455
470
450
610
439
585
445
615
490
595
437
438b
440
436

FIG. 18

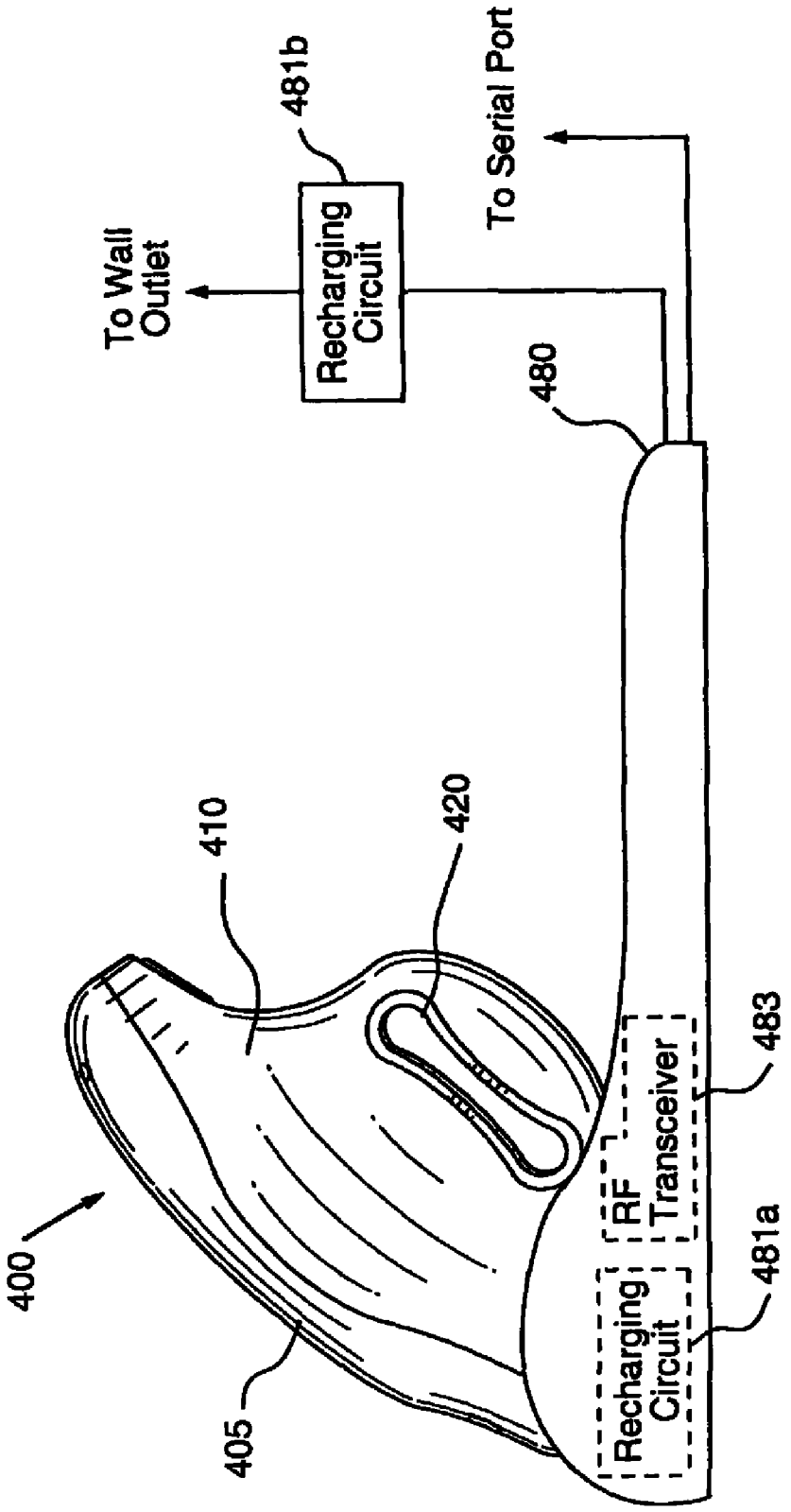
To Wall Outlet
481b
Recharging Circuit
To Serial Port
480
410
420
400
405
Recharging Circuit
RF Transceiver
483
481a

FIG. 19

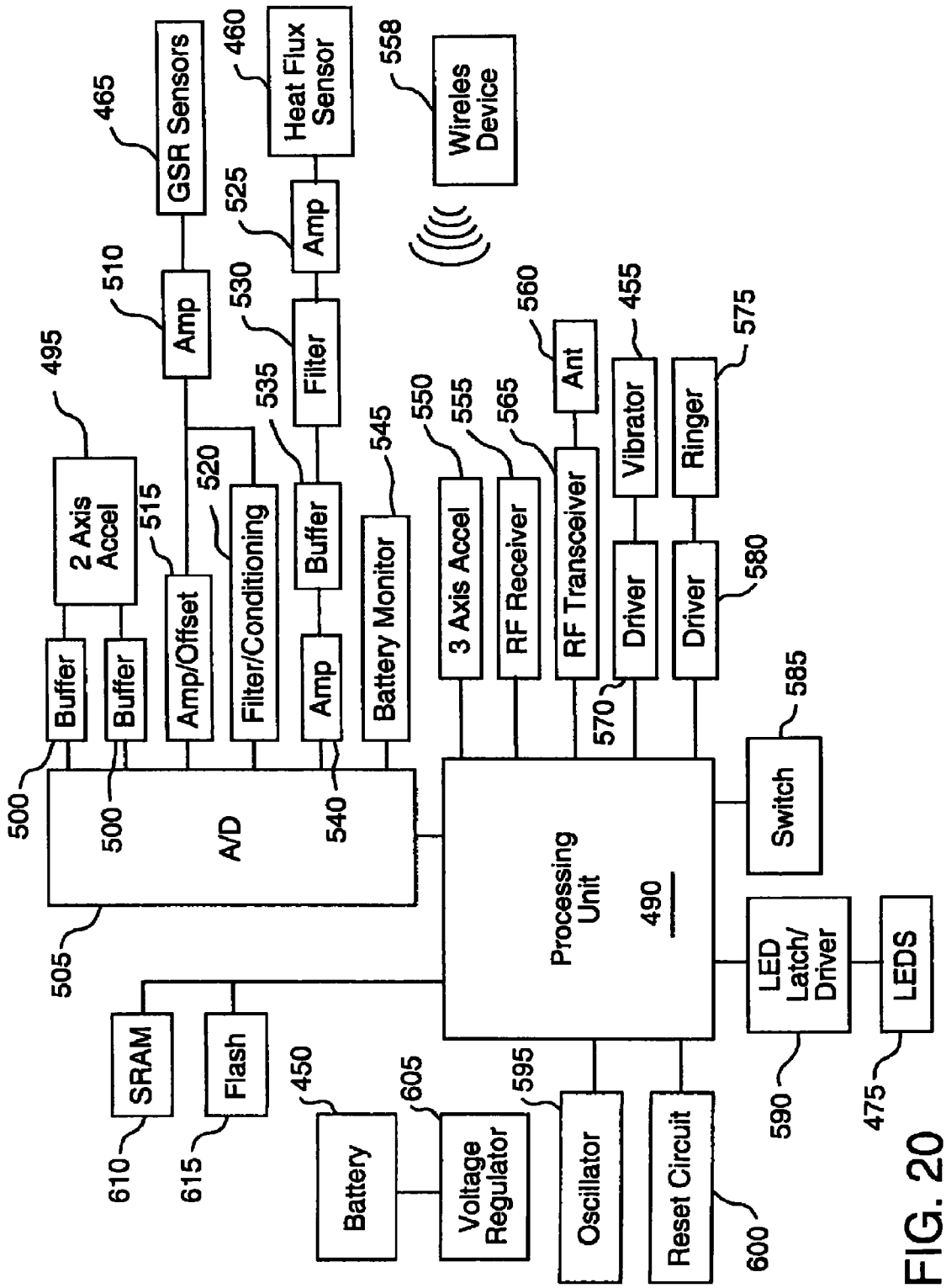
GSR Sensors
465
Heat Flux Sensor
460
Wireles Device
558
Amp
510
Amp
525
Filter
530
Ant
560
Vibrator
455
Ringer
575
2 Axis Accel
495
Buffer
515
Amp/Offset
520
Filter/Conditioning
535
Buffer
545
Battery Monitor
550
3 Axis Accel
555
RF Receiver
565
RF Transceiver
Driver
570
Driver
580
Buffer
500
500
A/D
505
Amp
540
Processing Unit
490
Switch
585
LED Latch/ Driver
590
LEDS
475
SRAM
610
Flash
615
Battery
450
Voltage Regulator
605
Oscillator
595
Reset Circuit
600

FIG. 20

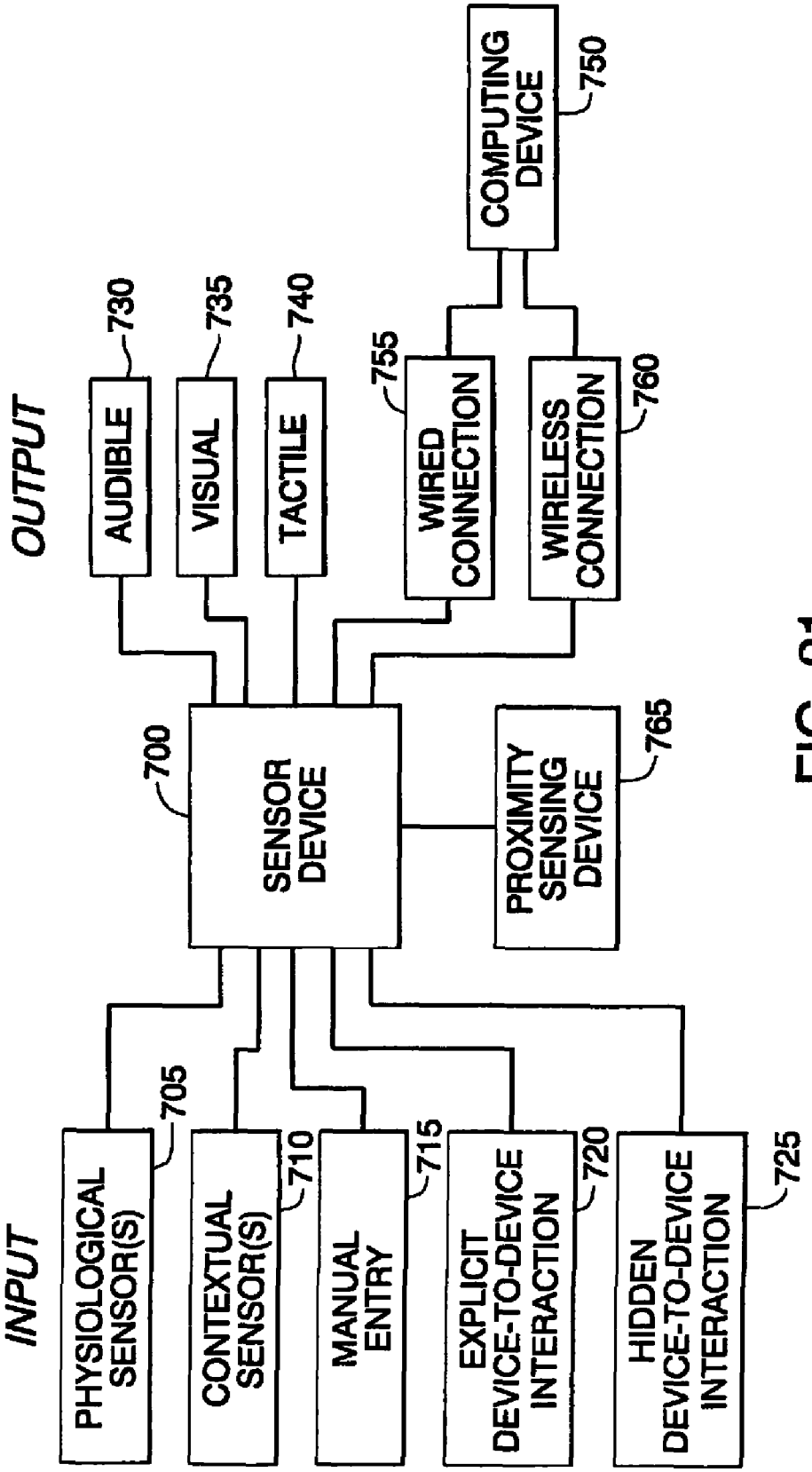
OUTPUT
AUDIBLE
730
VISUAL
735
TACTILE
740
WIRED CONNECTION
755
WIRELESS CONNECTION
760
COMPUTING DEVICE
750
SENSOR DEVICE
700
PROXIMITY SENSING DEVICE
765
INPUT
PHYSIOLOGICAL SENSOR(S)
705
CONTEXTUAL SENSOR(S)
710
MANUAL ENTRY
715
EXPLICIT DEVICE-TO-DEVICE INTERACTION
720
HIDDEN DEVICE-TO-DEVICE INTERACTION
725

FIG. 21

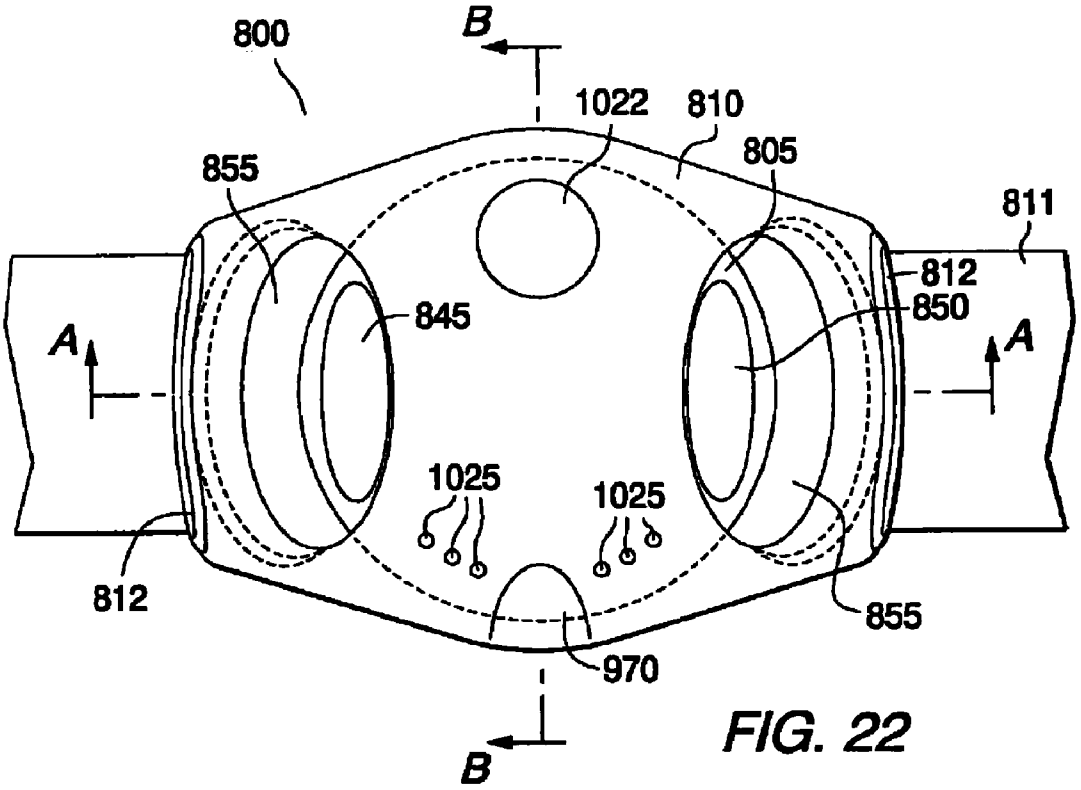
800
B
1022
810
805
855
811
812
850
845
A
A
1025
1025
812
855
970
B

FIG. 22

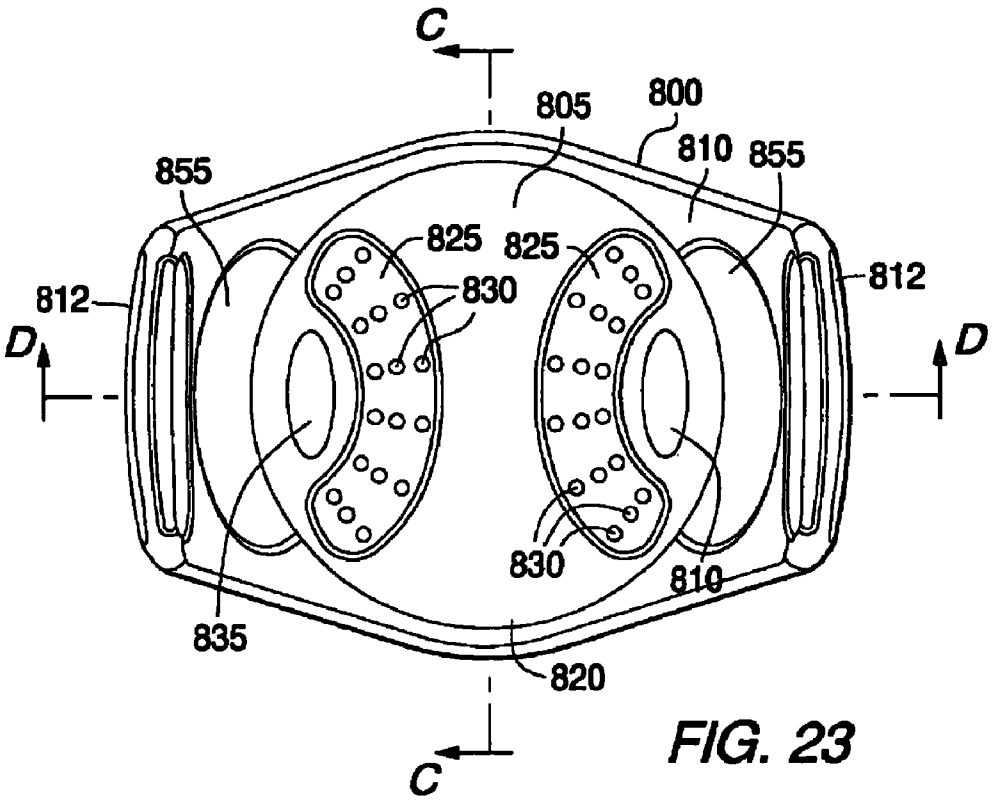
C
805
800
810
855
855
825
825
812
830
812
D
D
830
810
835
820
C

FIG. 23

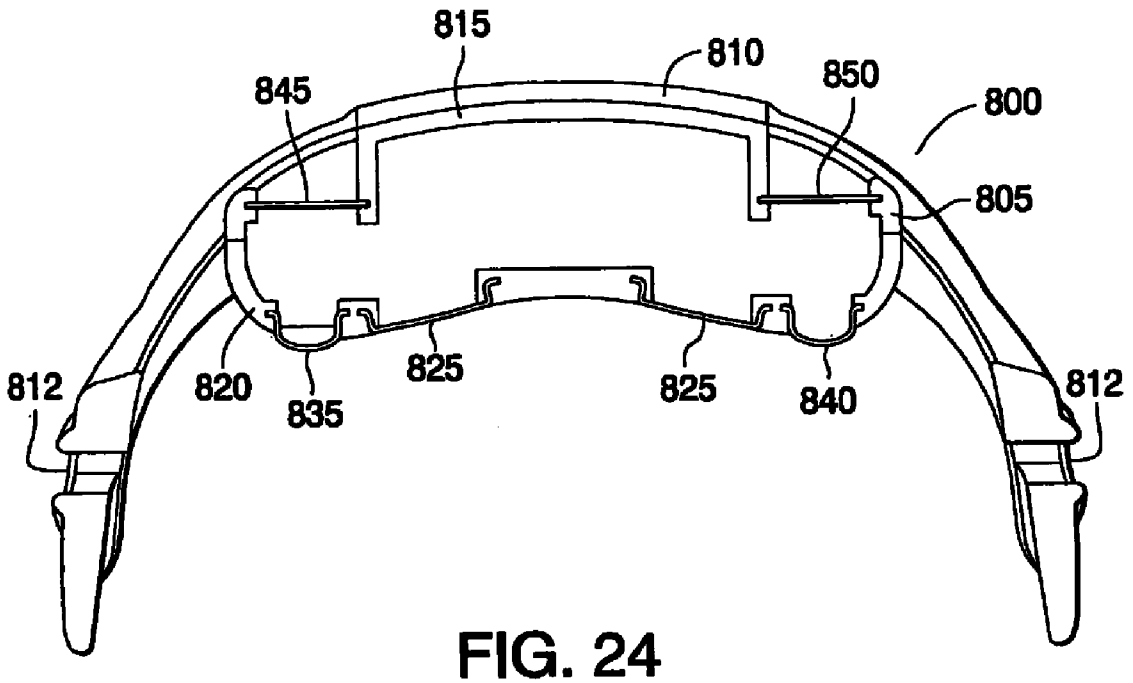
815
810
845
850
800
805
812
820
835
825
825
840
812

FIG. 24

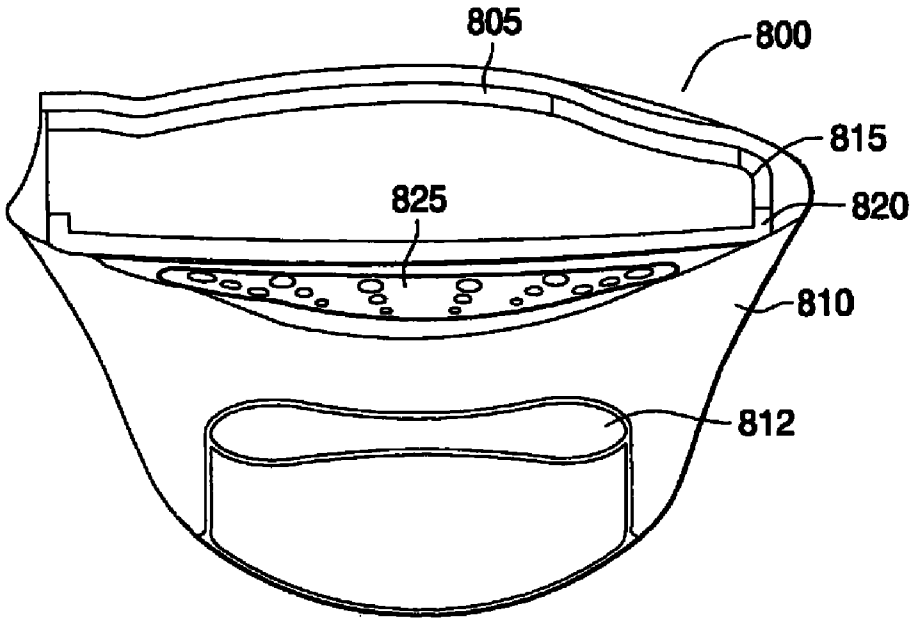
805
800
815
825
820
810
812

FIG. 25

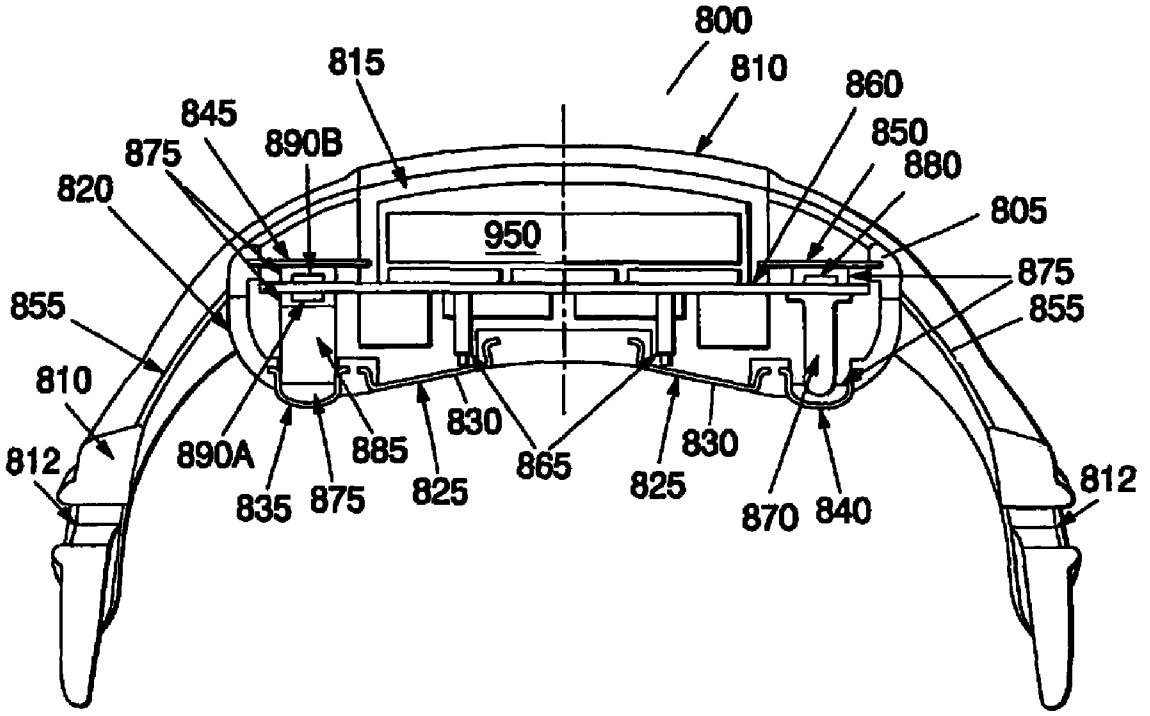
800
810
815
860
845
850
875
890B
880
820
805
950
875
855
855
810
830
890A
885
865
830
812
835
875
825
825
870
840
812

FIG. 26

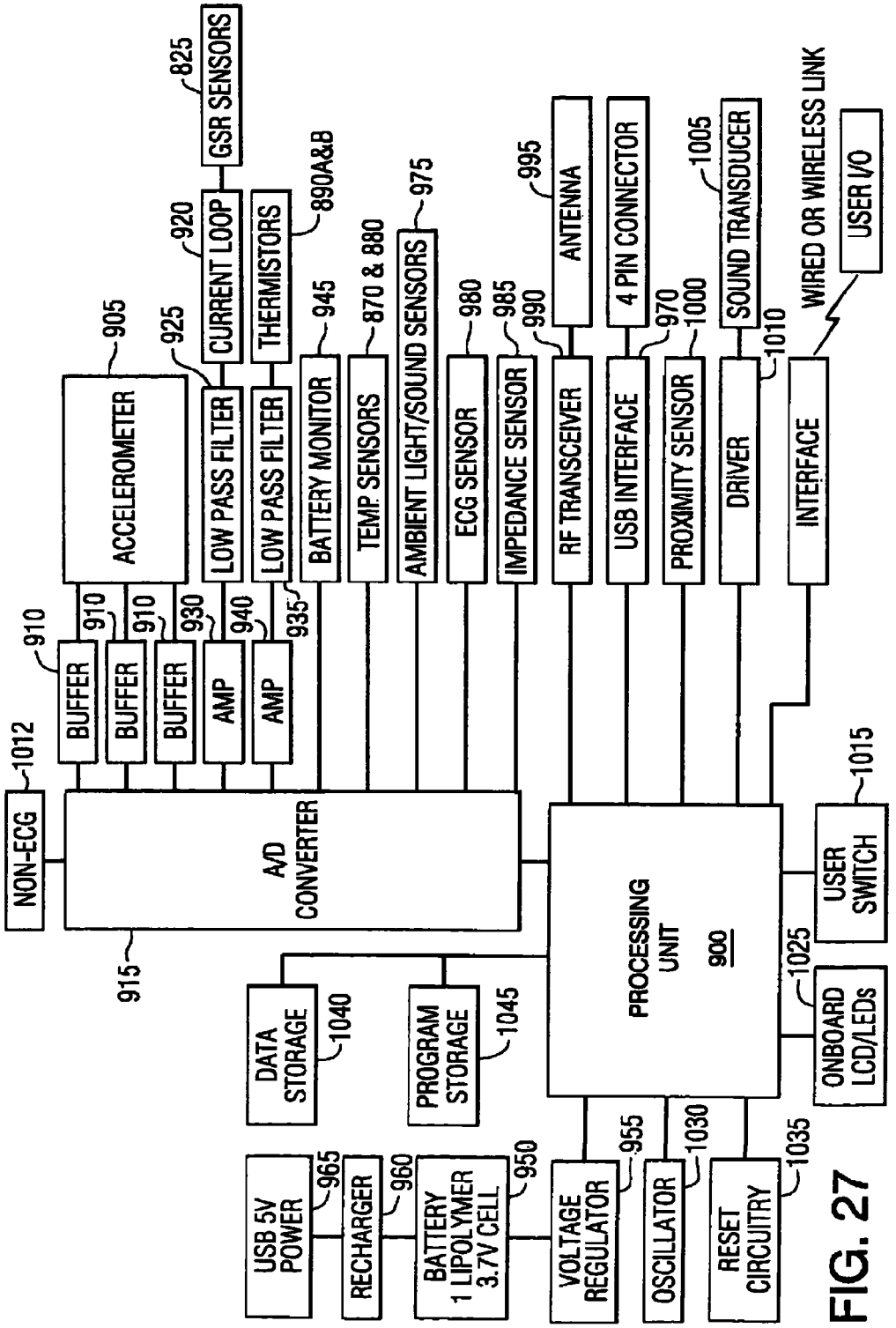
NON-ECG
1012
BUFFER
910
BUFFER
910
BUFFER
910
AMP
930
AMP
940
ACCELEROMETER
905
LOW PASS FILTER
925
CURRENT LOOP
920
GSR SENSORS
825
LOW PASS FILTER
935
THERMISTORS
890A&B
BATTERY MONITOR
945
TEMP. SENSORS
870 & 880
AMBIENT LIGHT/SOUND SENSORS
975
ECG SENSOR
980
IMPEDANCE SENSOR
985
990
RF TRANSCEIVER
ANTENNA
995
USB INTERFACE
4 PIN CONNECTOR
970
PROXIMITY SENSOR
1000
DRIVER
1010
SOUND TRANSDUCER
1005
INTERFACE
WIRED OR WIRELESS LINK
USER I/O
A/D CONVERTER
915
PROCESSING UNIT
900
USER SWITCH
1015
ONBOARD LCD/LEDs
1025
DATA STORAGE
1040
PROGRAM STORAGE
1045
USB 5V POWER
965
RECHARGER
960
BATTERY 1 LIPOLYMER 3.7V CELL
950
VOLTAGE REGULATOR
955
OSCILLATOR
1030
RESET CIRCUITRY
1035

FIG. 27

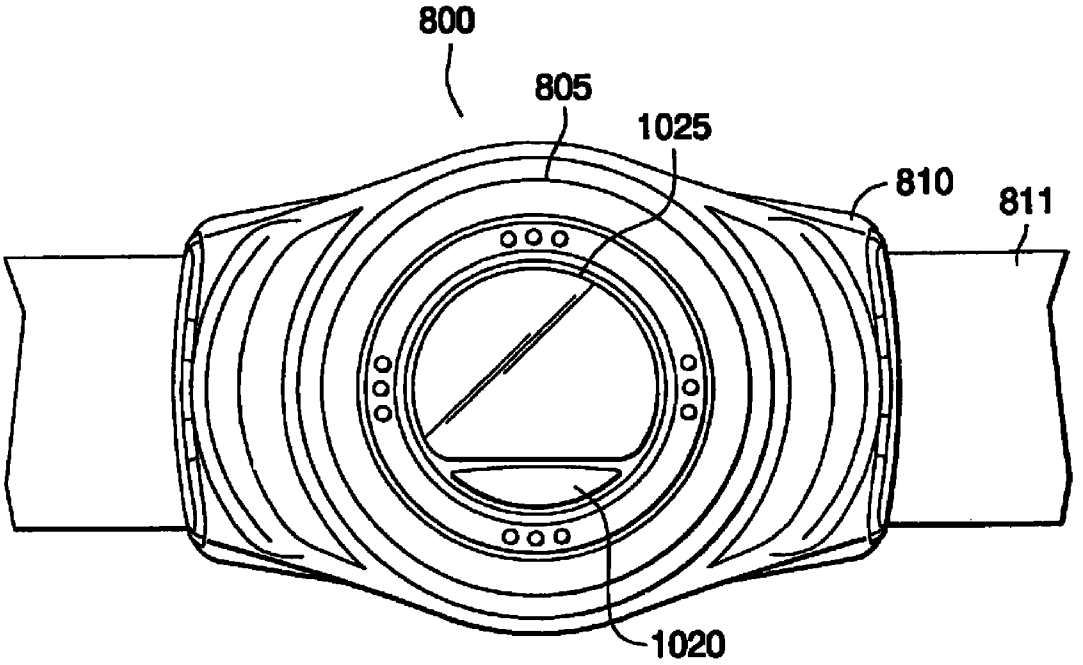

FIG. 28

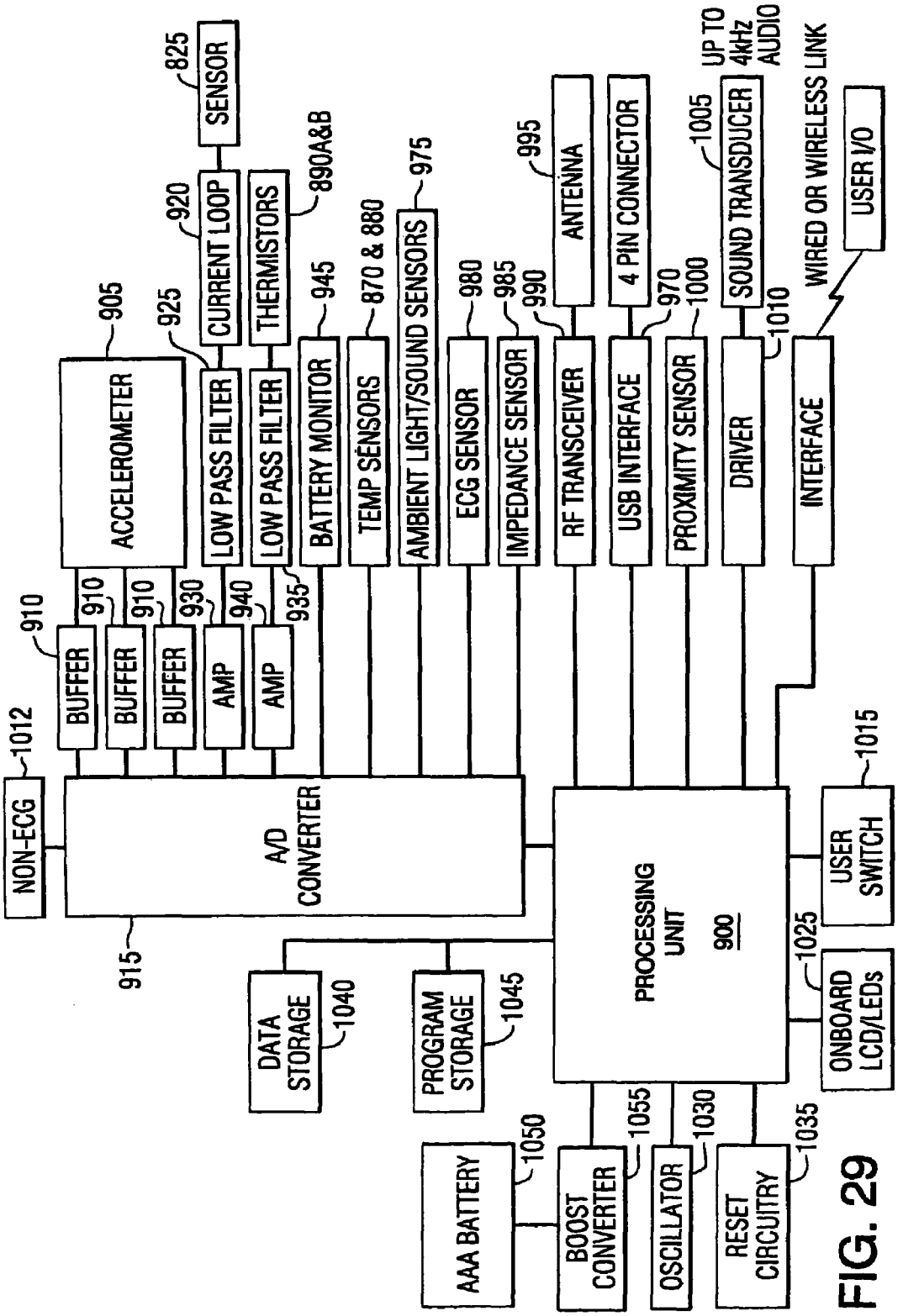
NON-ECG
1012
BUFFER
910
BUFFER
910
BUFFER
910
AMP
930
AMP
940
ACCELEROMETER
905
LOW PASS FILTER
925
LOW PASS FILTER
935
CURRENT LOOP
920
SENSOR
825
THERMISTORS
890A&B
BATTERY MONITOR
945
TEMP SENSORS
870 & 880
AMBIENT LIGHT/SOUND SENSORS
975
ECG SENSOR
980
IMPEDANCE SENSOR
985
RF TRANSCEIVER
990
ANTENNA
995
USB INTERFACE
4 PIN CONNECTOR
970
PROXIMITY SENSOR
1000
DRIVER
1010
SOUND TRANSDUCER
1005
UP TO 4kHz AUDIO
INTERFACE
WIRED OR WIRELESS LINK
USER I/O
A/D CONVERTER
915
PROCESSING UNIT
900
USER SWITCH
1015
ONBOARD LCD/LEDs
1025
DATA STORAGE
1040
PROGRAM STORAGE
1045
AAA BATTERY
1050
BOOST CONVERTER
1055
OSCILLATOR
1030
RESET CIRCUITRY
1035

FIG. 29

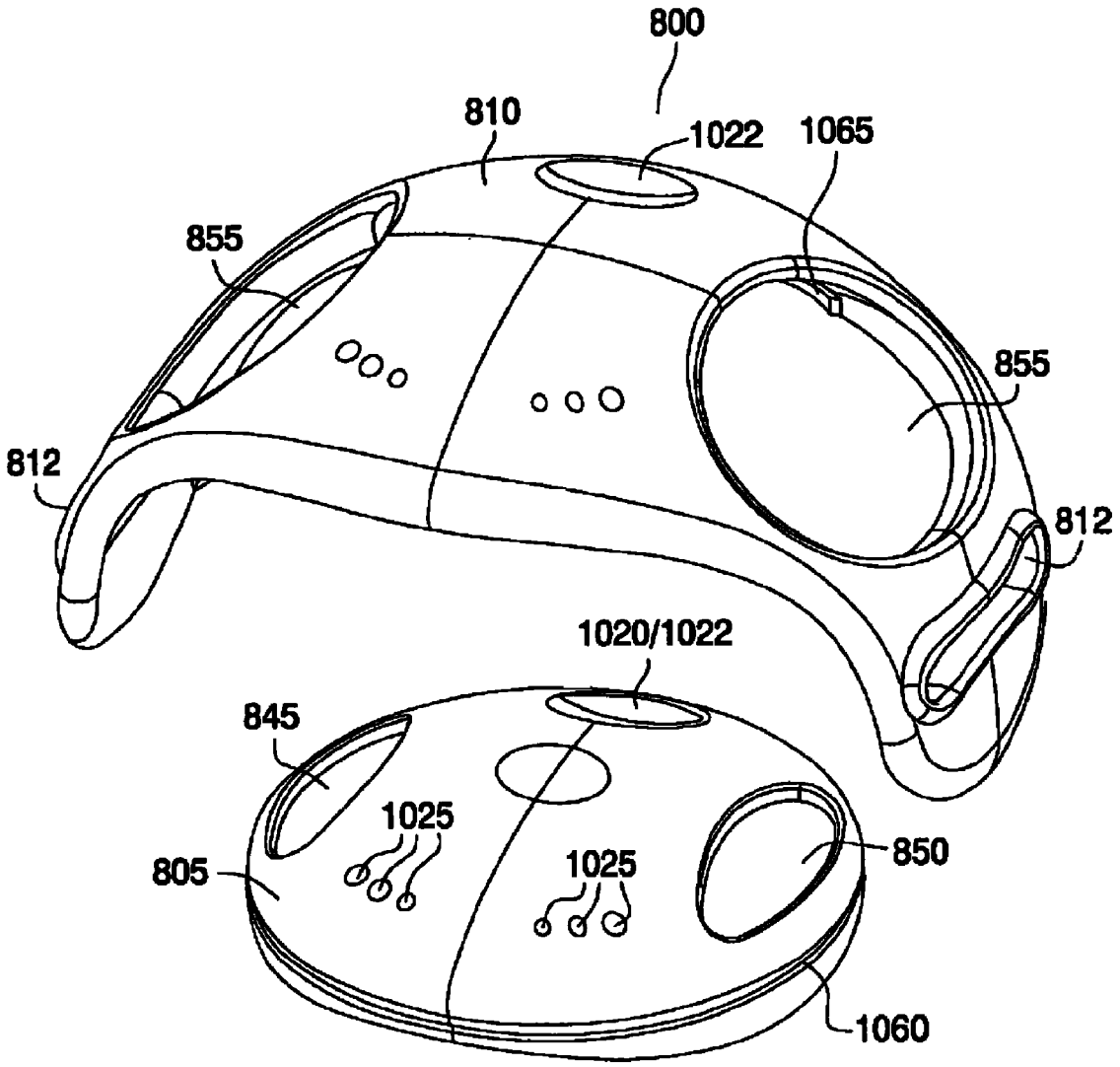
800
810
1022
1065
855
855
812
812
1020/1022
845
1025
805
1025
850
1060

FIG. 30

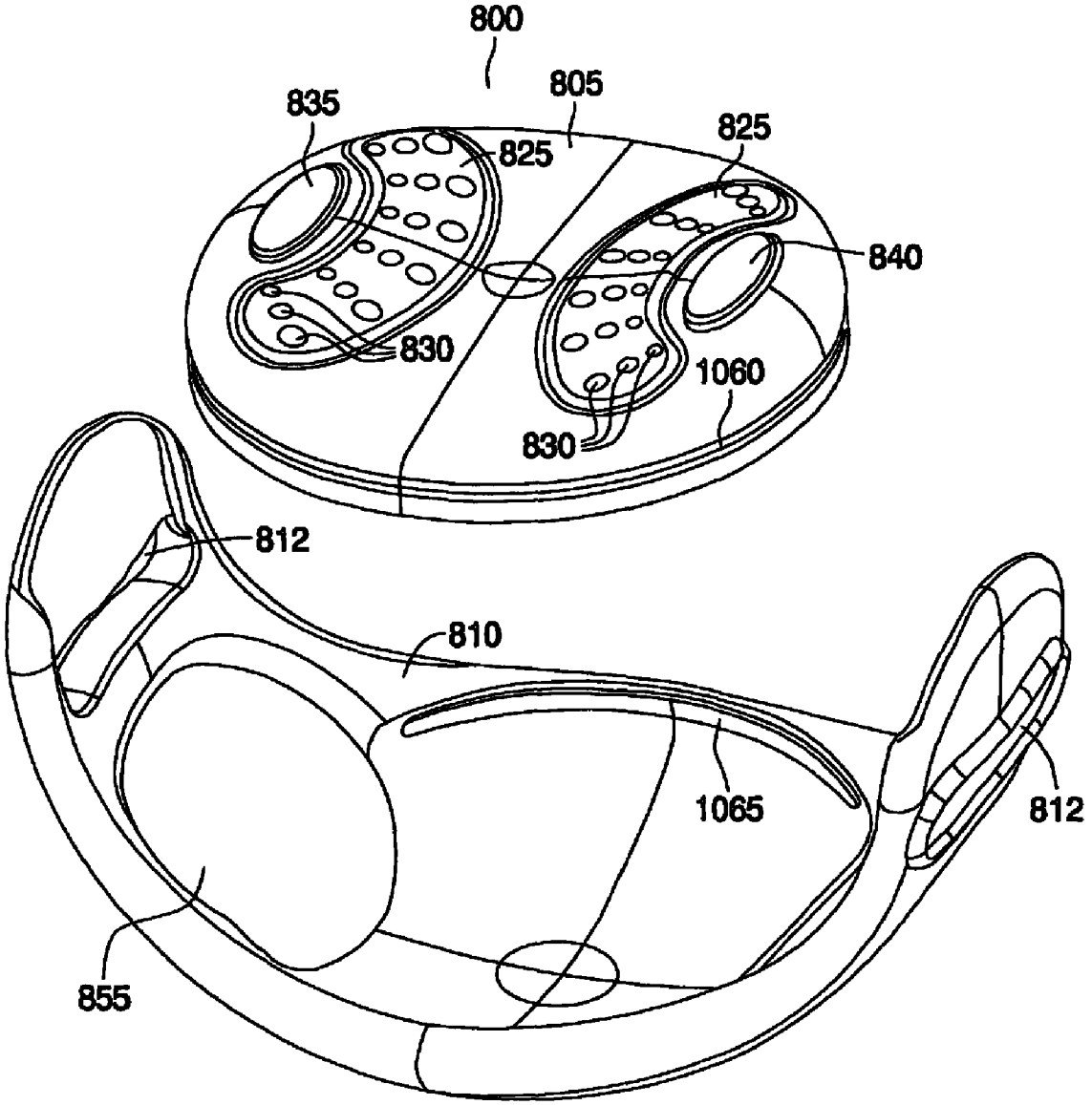

FIG. 31

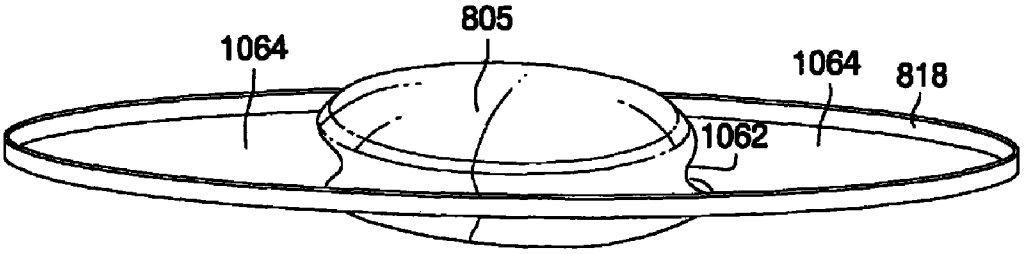
805
1064
1064
818
1062

FIG. 32

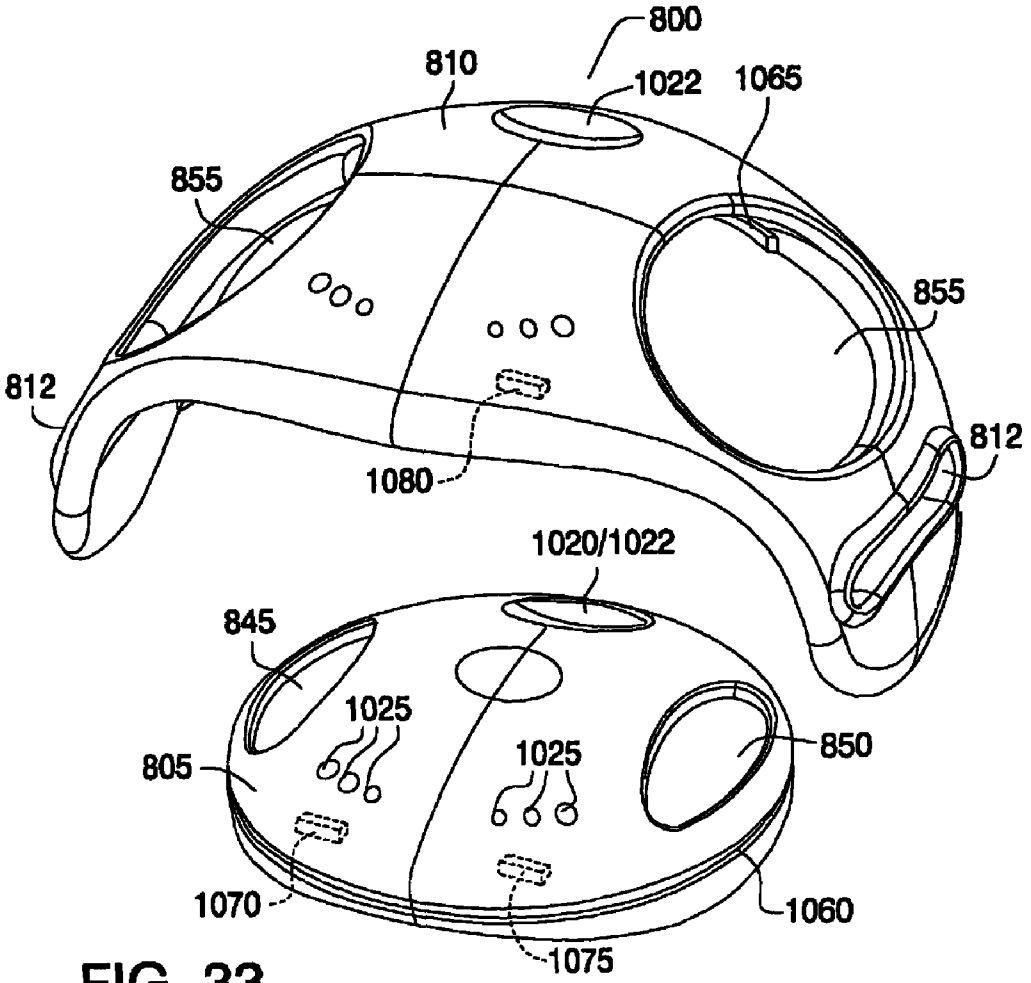
800
810
1022
1065
855
855
812
812
1080
1020/1022
845
1025
1025
850
805
1070
1060
1075

FIG. 33

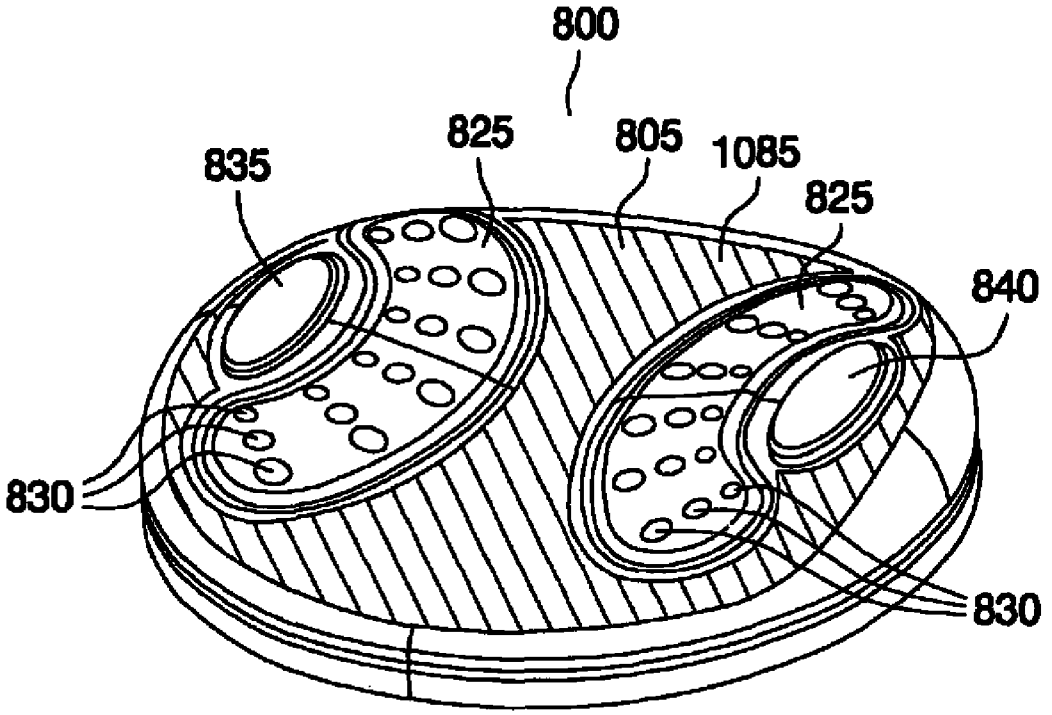

FIG. 34

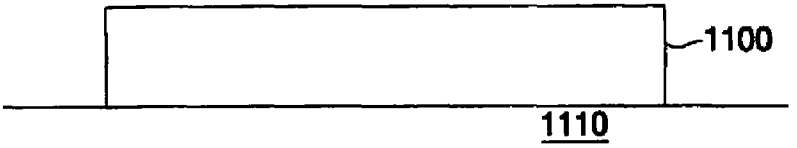

FIG. 35A
PRIOR ART

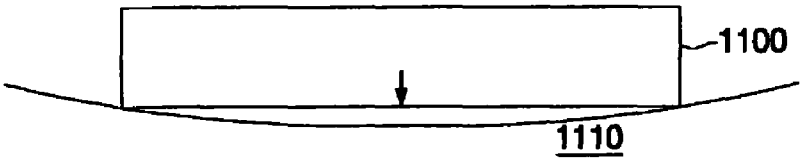

FIG. 35B
PRIOR ART

FIG. 35C

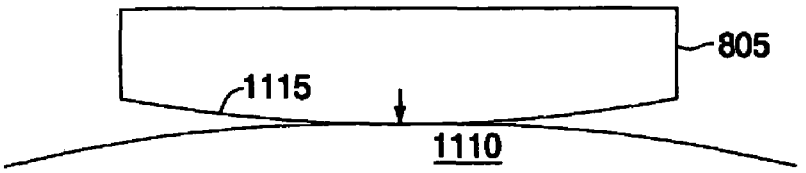

FIG. 35D

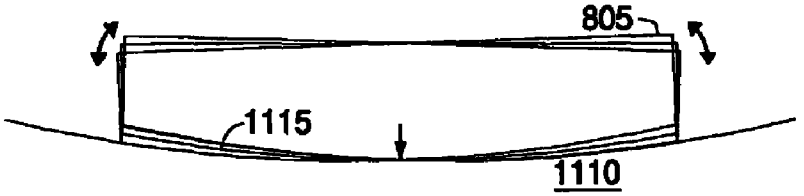

FIG. 35E

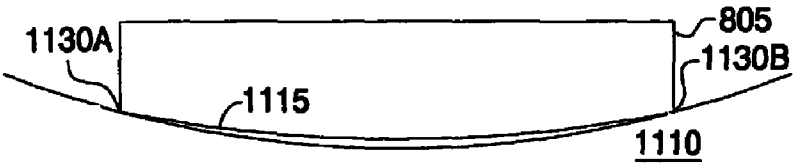

FIG. 35F

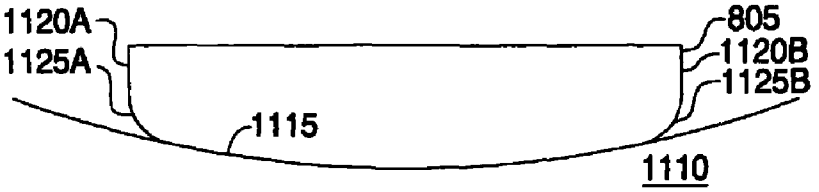

FIG. 35G

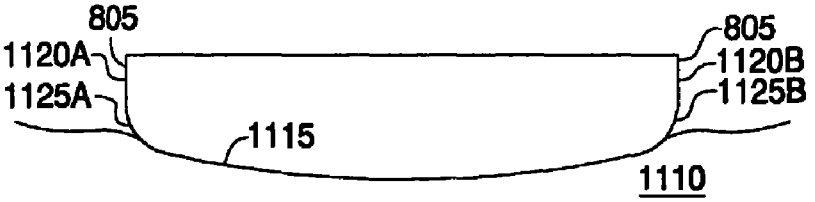

FIG. 35H

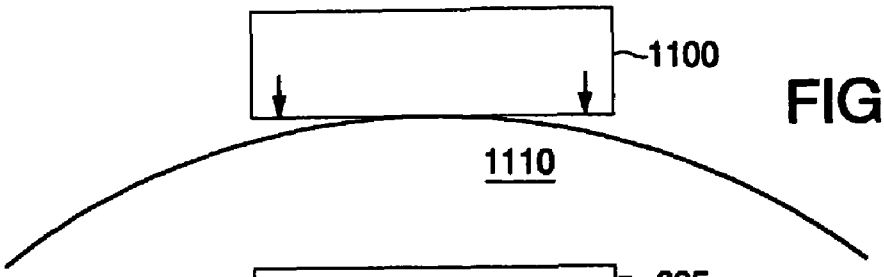

FIG. 36A

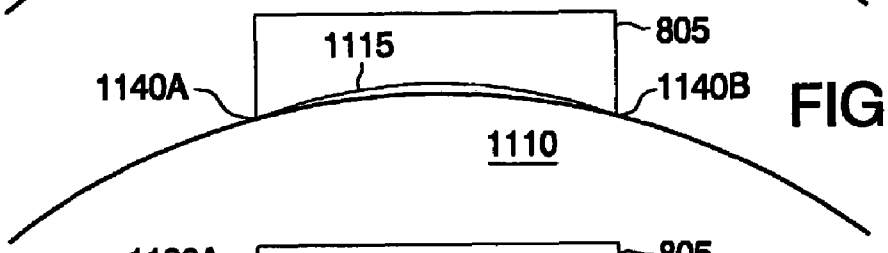

FIG. 36B

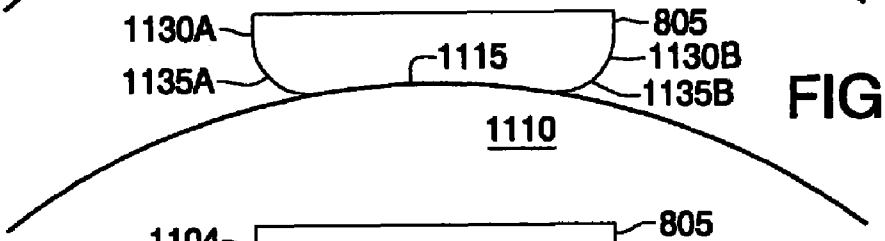

FIG. 36C

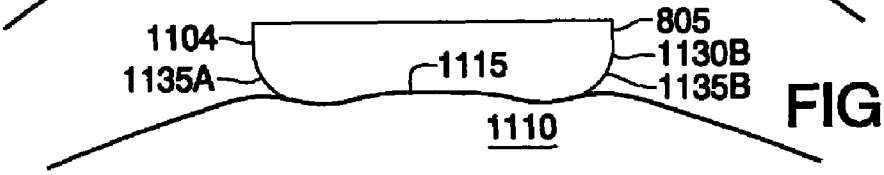

FIG. 36D

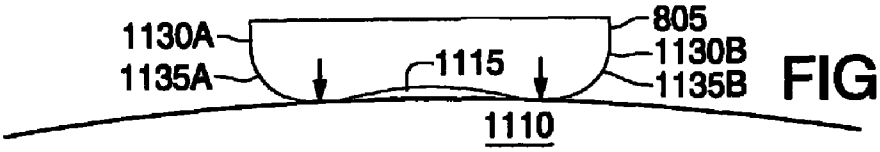

FIG. 36E

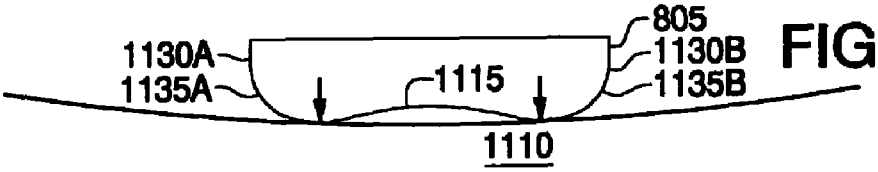

FIG. 36F

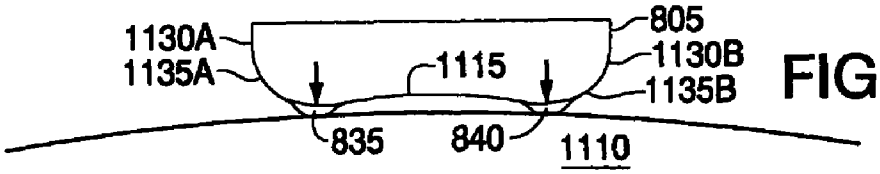

FIG. 36G

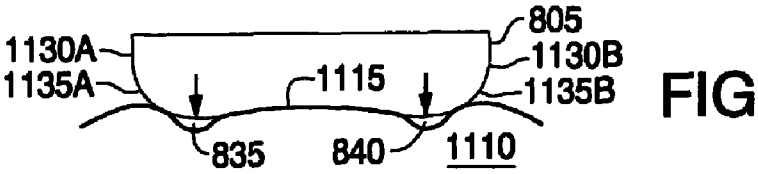

FIG. 36H

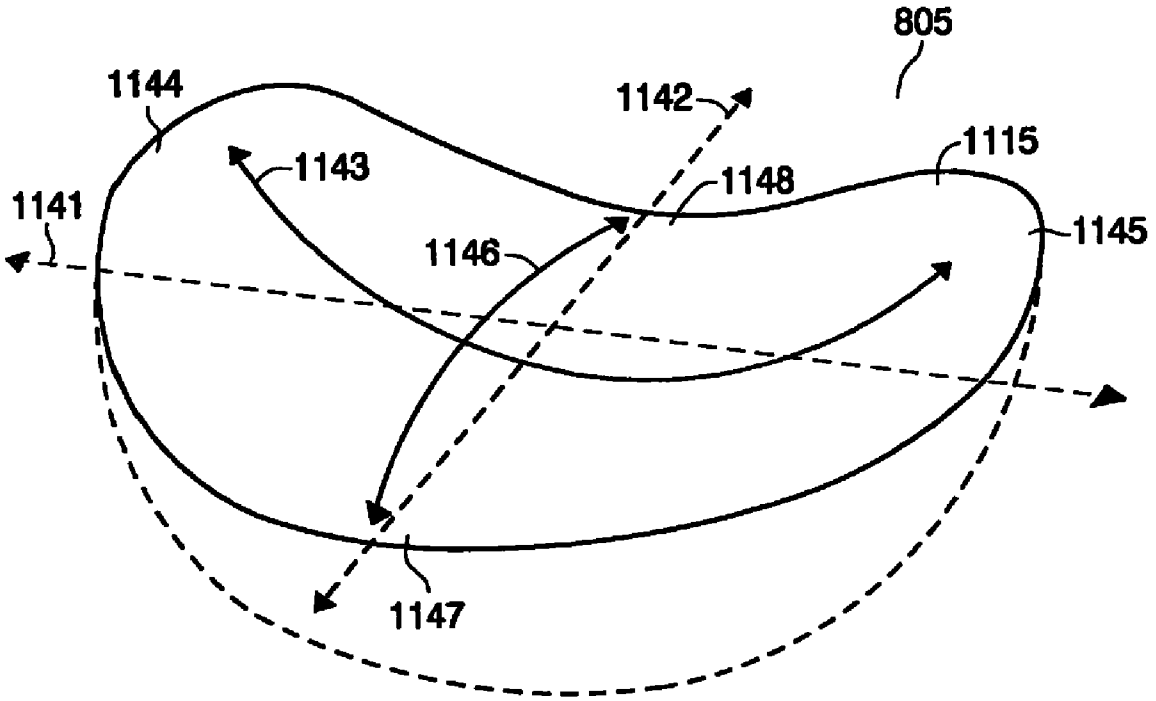

FIG. 37

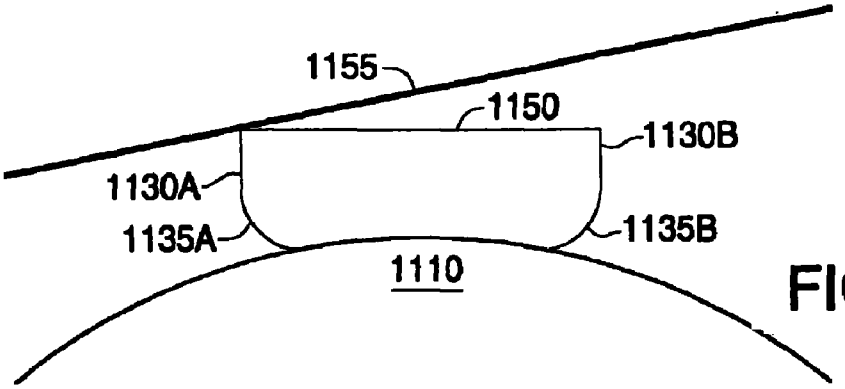

FIG. 38A

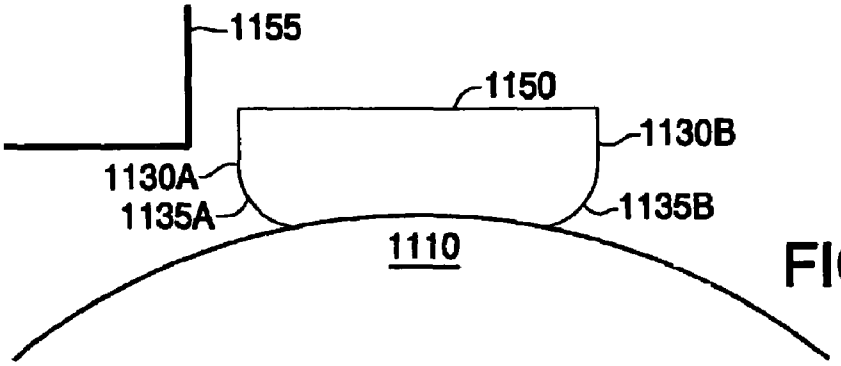

FIG. 38B

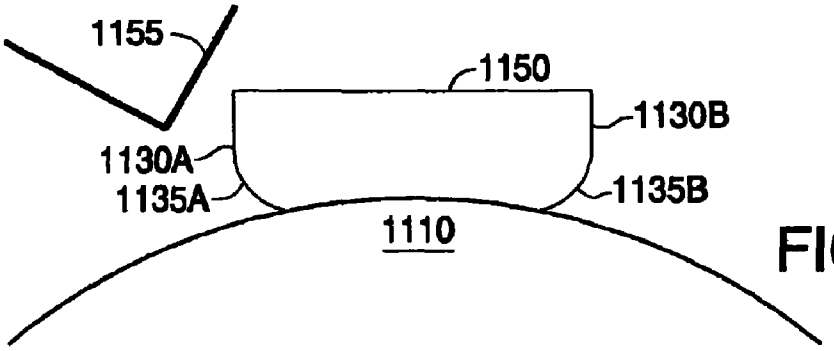

FIG. 38C

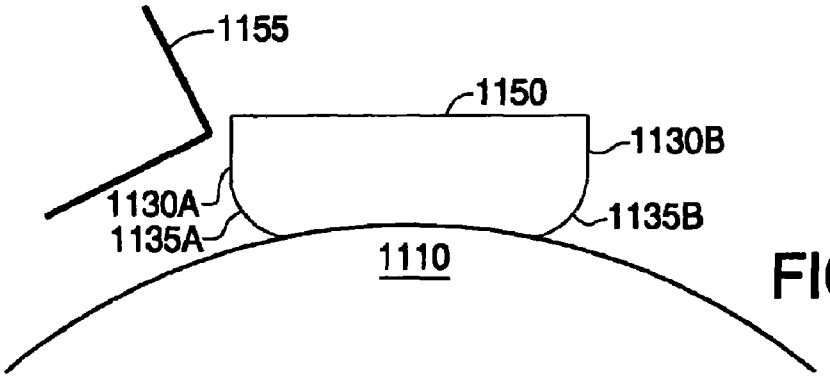

FIG. 38D

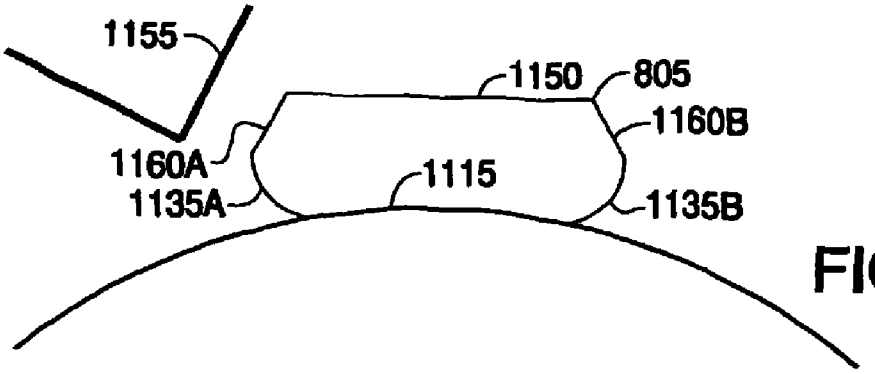

FIG. 39A

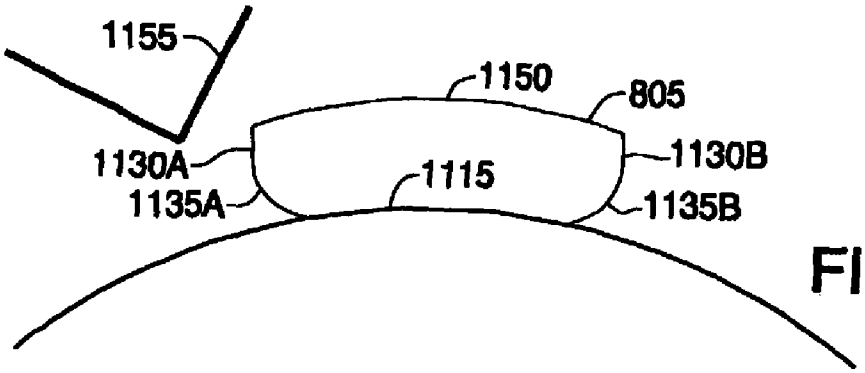

FIG. 39B

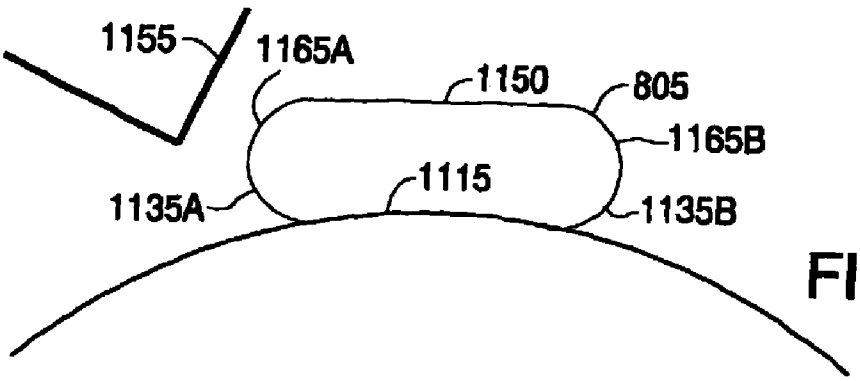

FIG. 39C

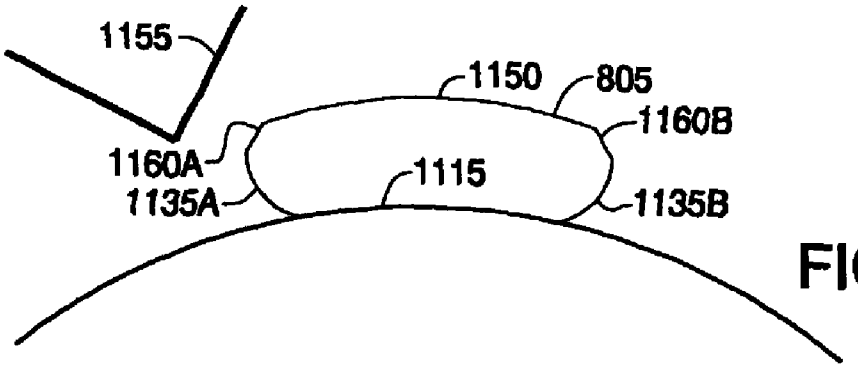

FIG. 39D

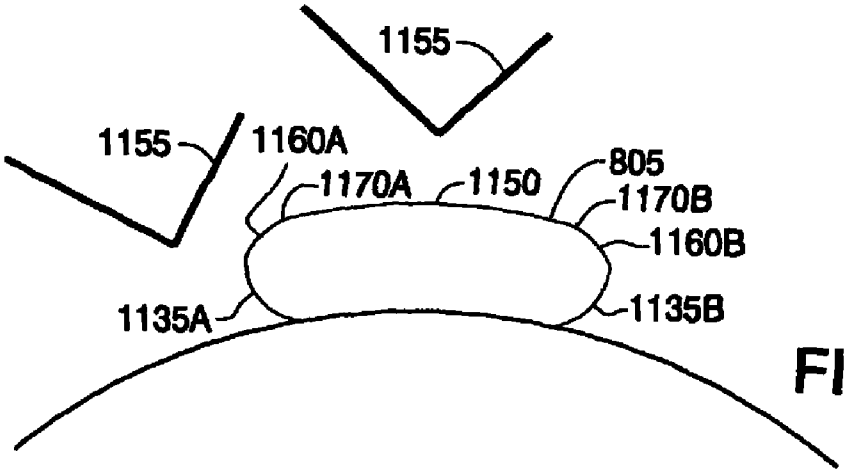

FIG. 39E

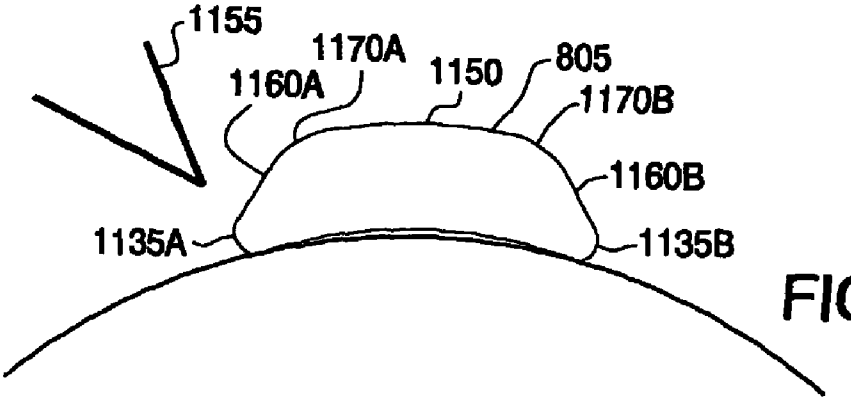

FIG. 39F

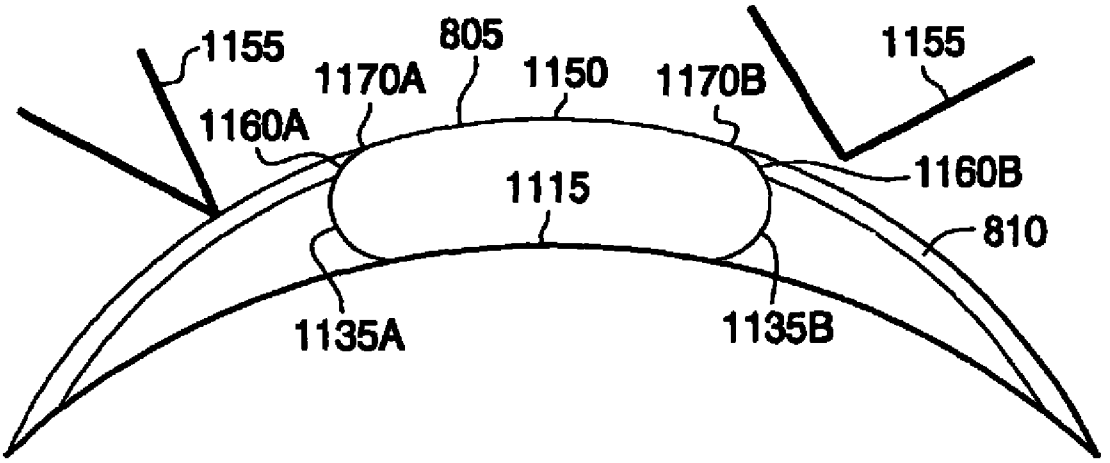
1155
805
1150
1170A
1170B
1155
1160A
1160B
1115
810
1135A
1135B

FIG. 39G

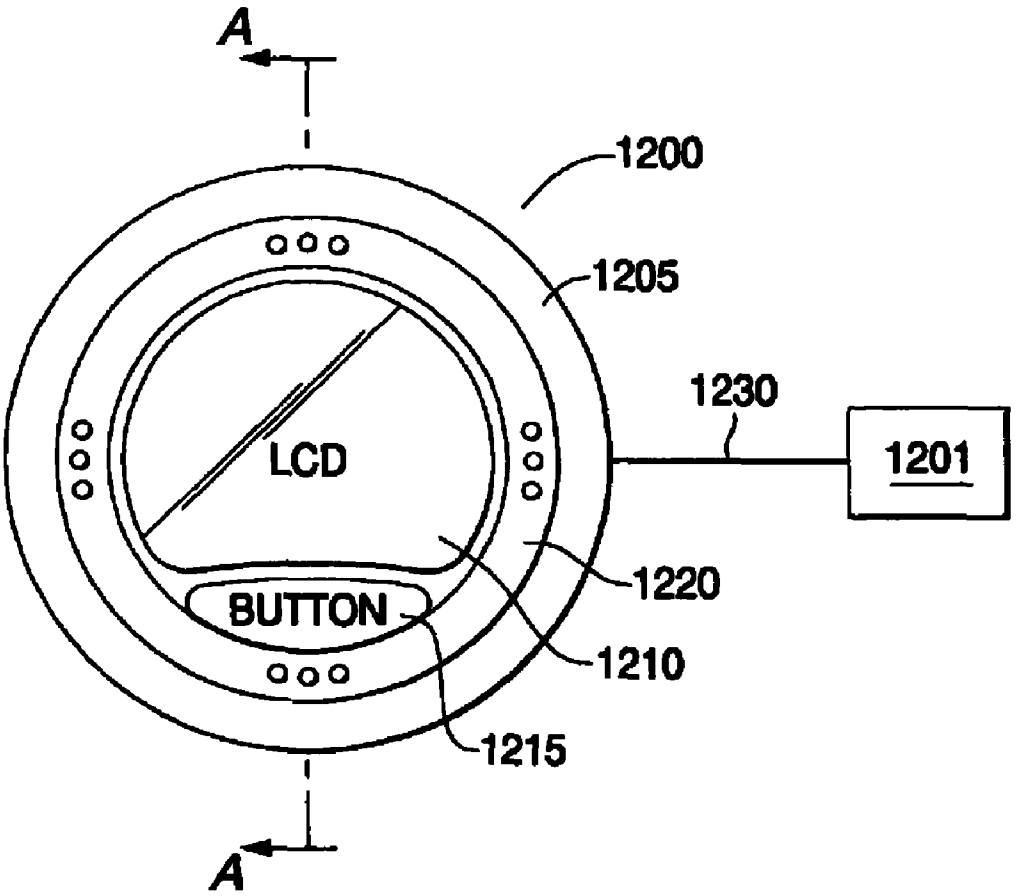
A
1200
1205
1230
1201
LCD
1220
BUTTON
1210
1215
A

FIG. 40

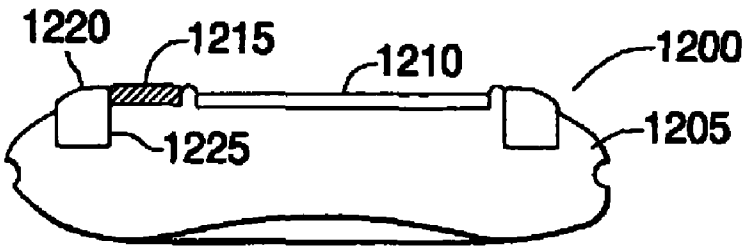
1220
1215
1210
1200
1225
1205

FIG. 41

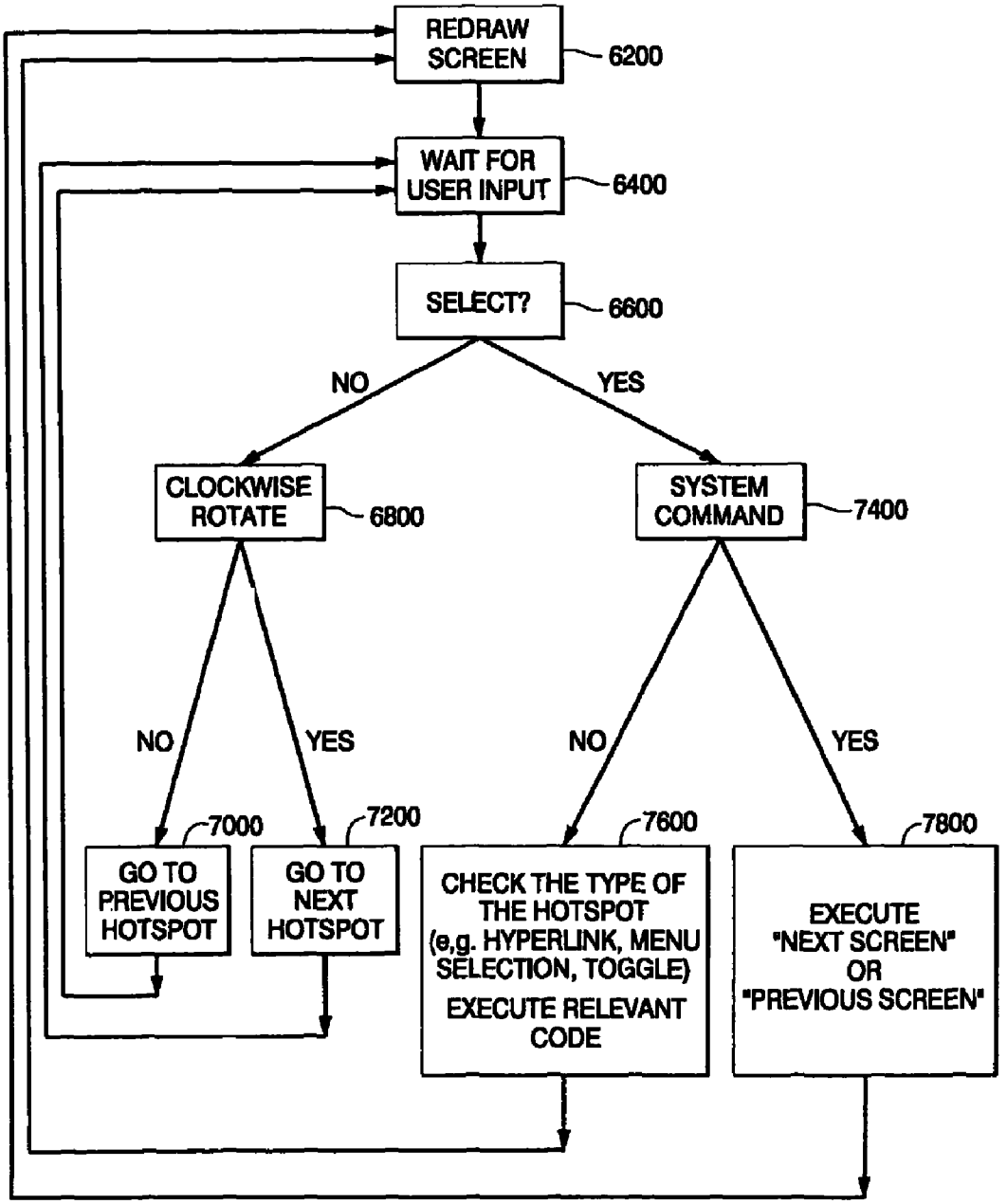

FIG. 42
PRIOR ART

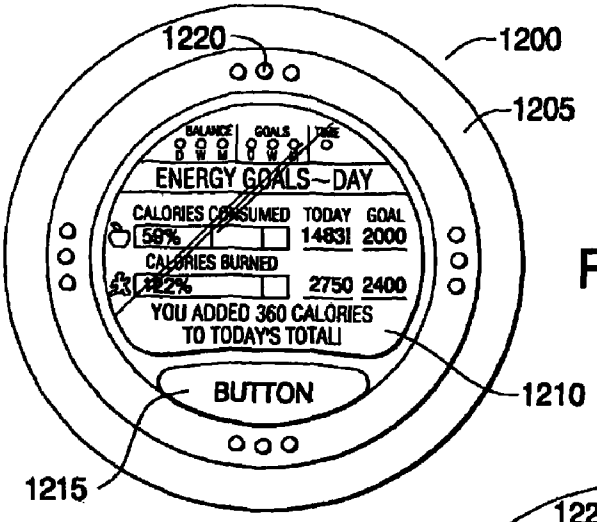

FIG. 43A

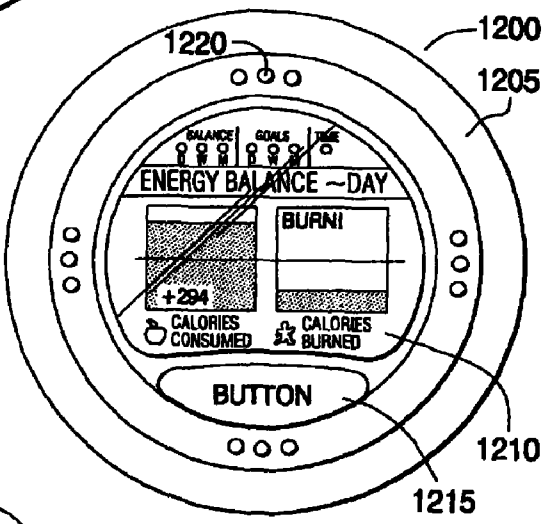

FIG. 43B

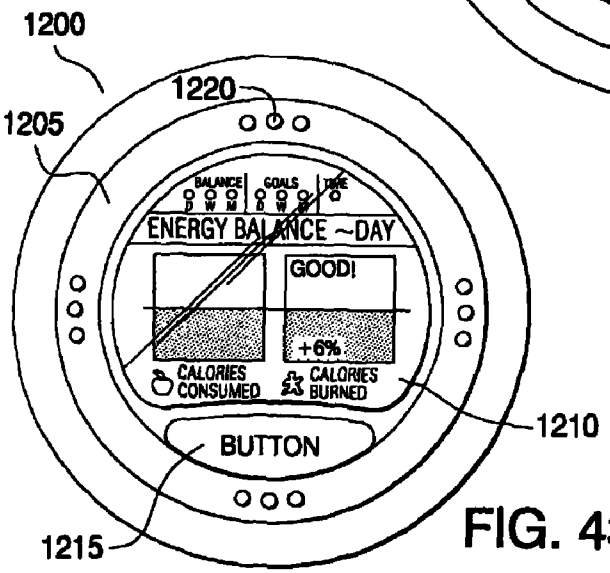

FIG. 43C

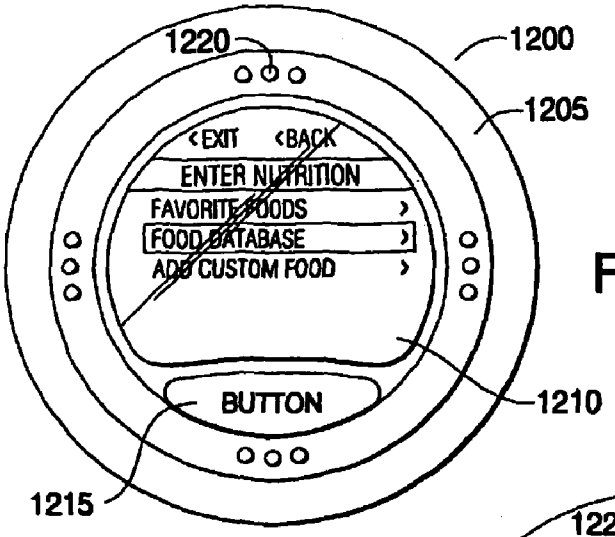

FIG. 43D

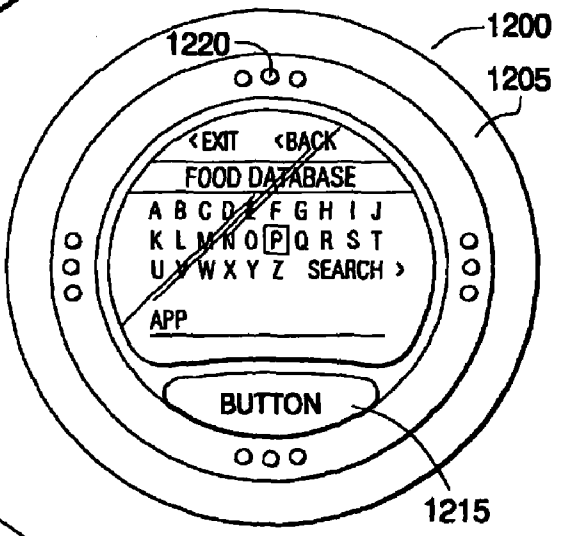

FIG. 43E

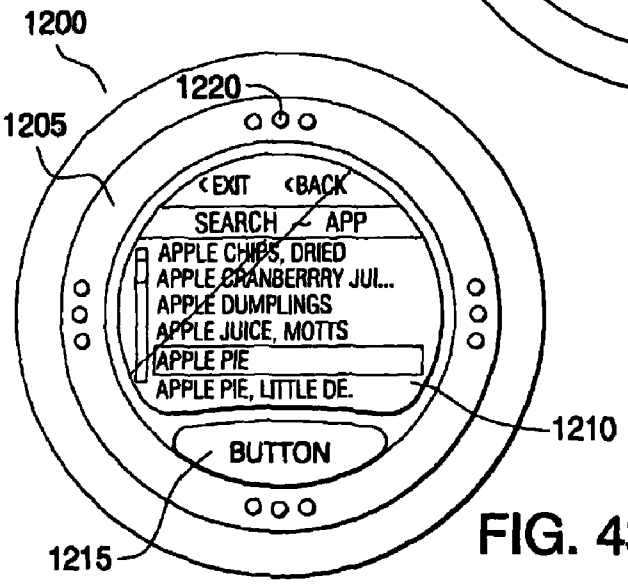

FIG. 43F

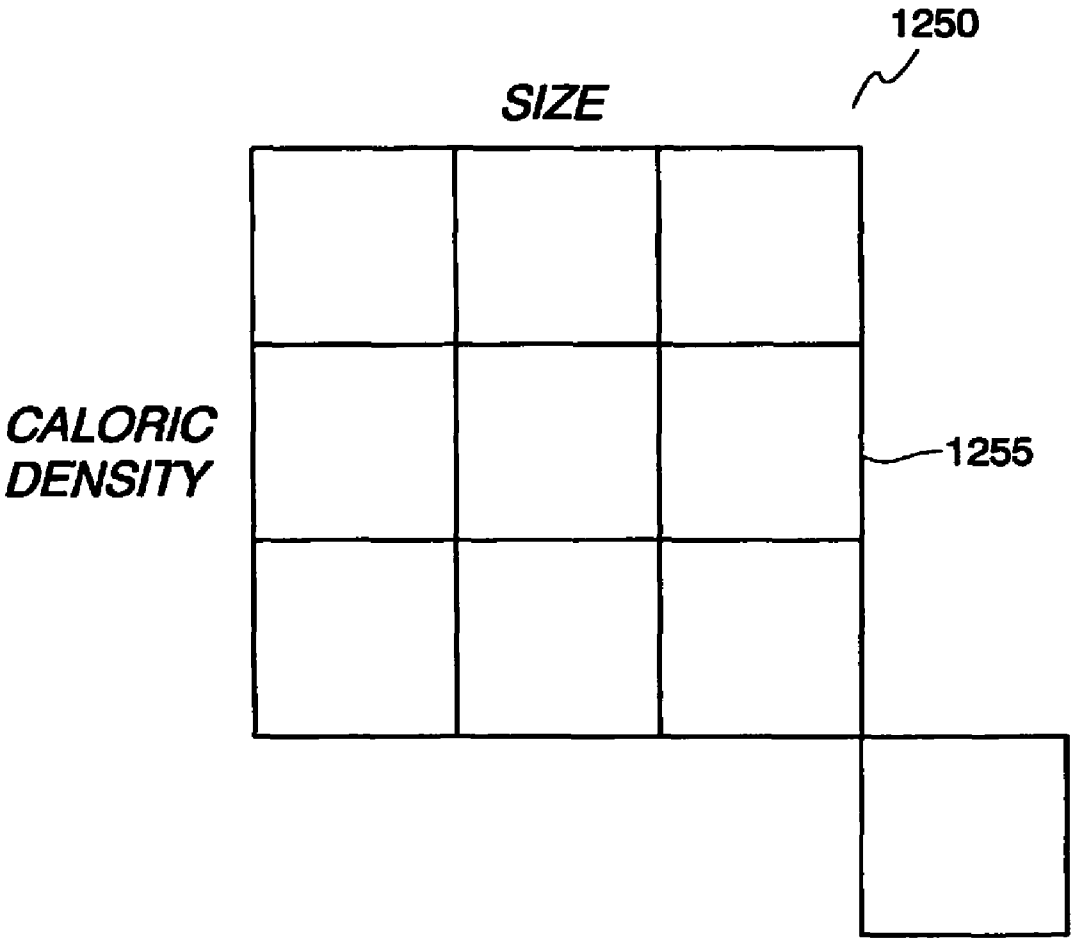

FIG. 43G

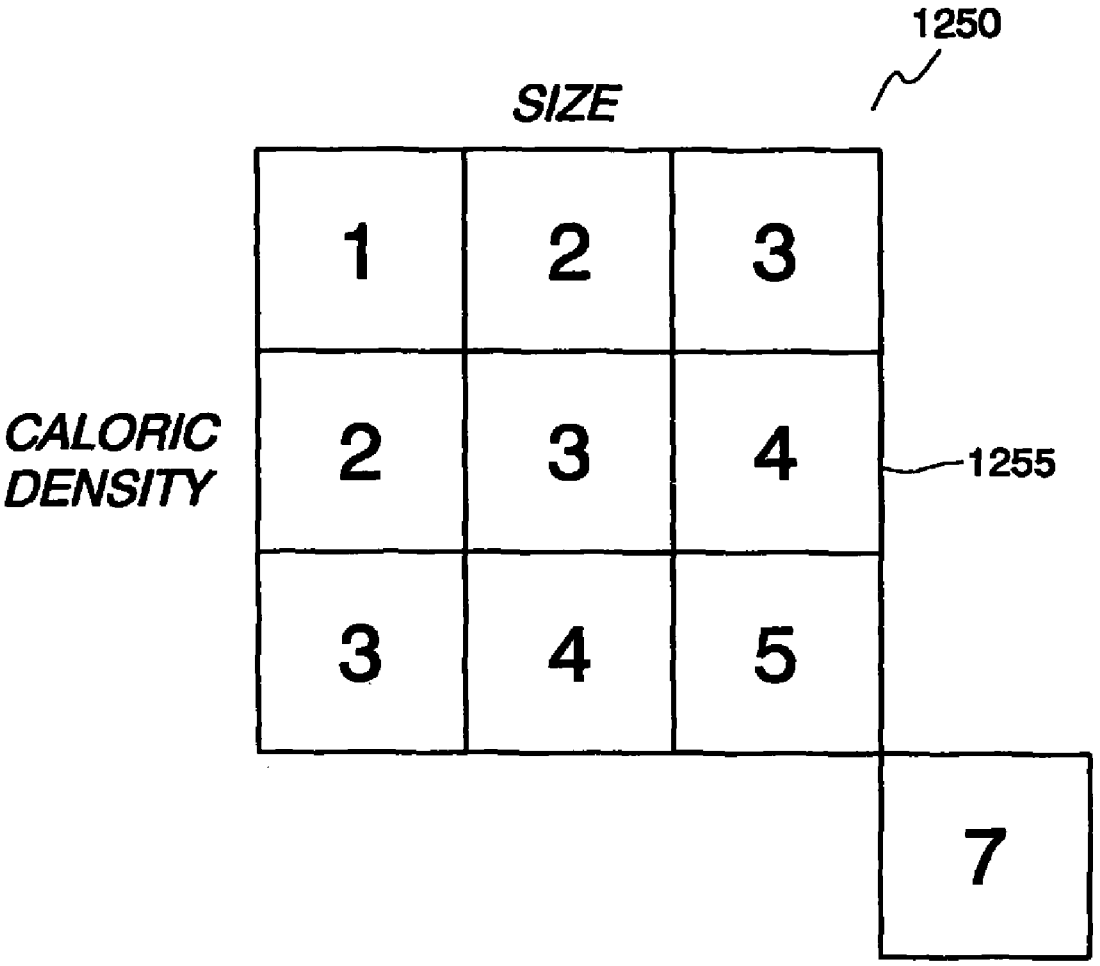

FIG. 43H

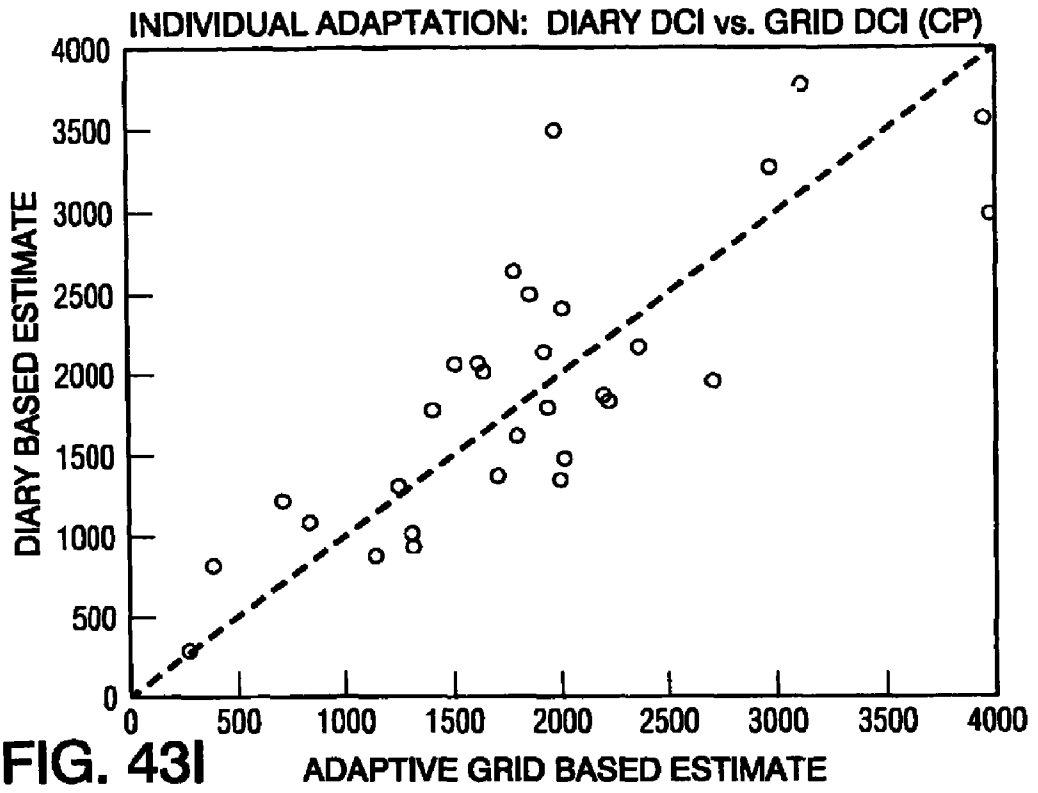

FIG. 43I

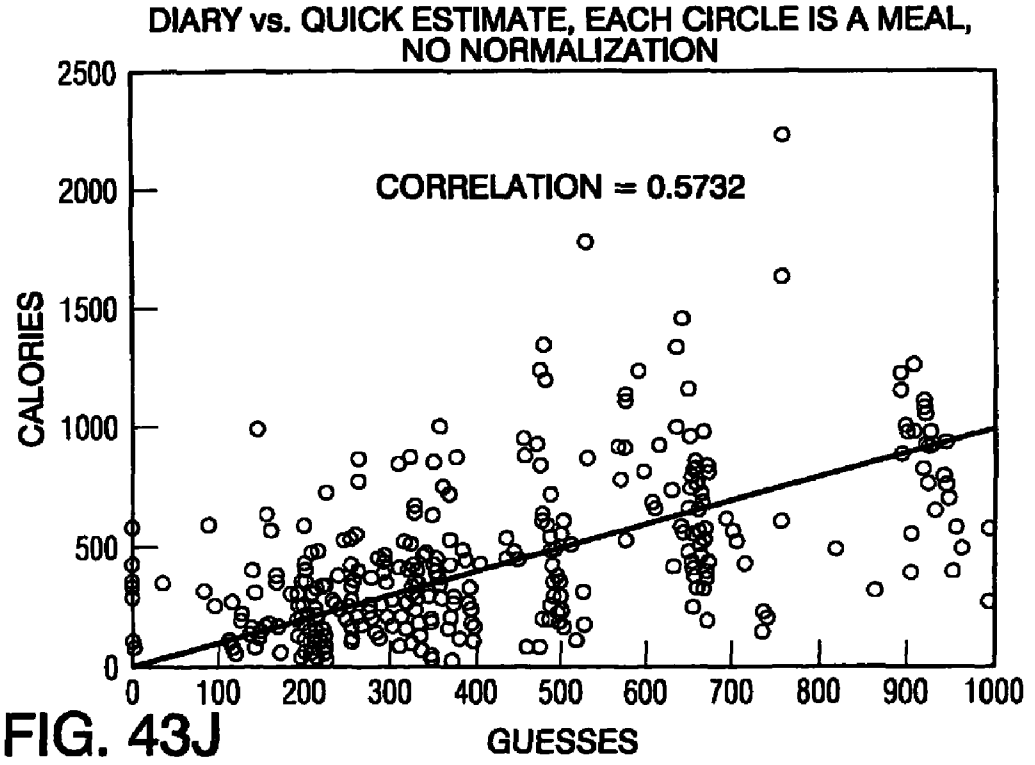

FIG. 43J

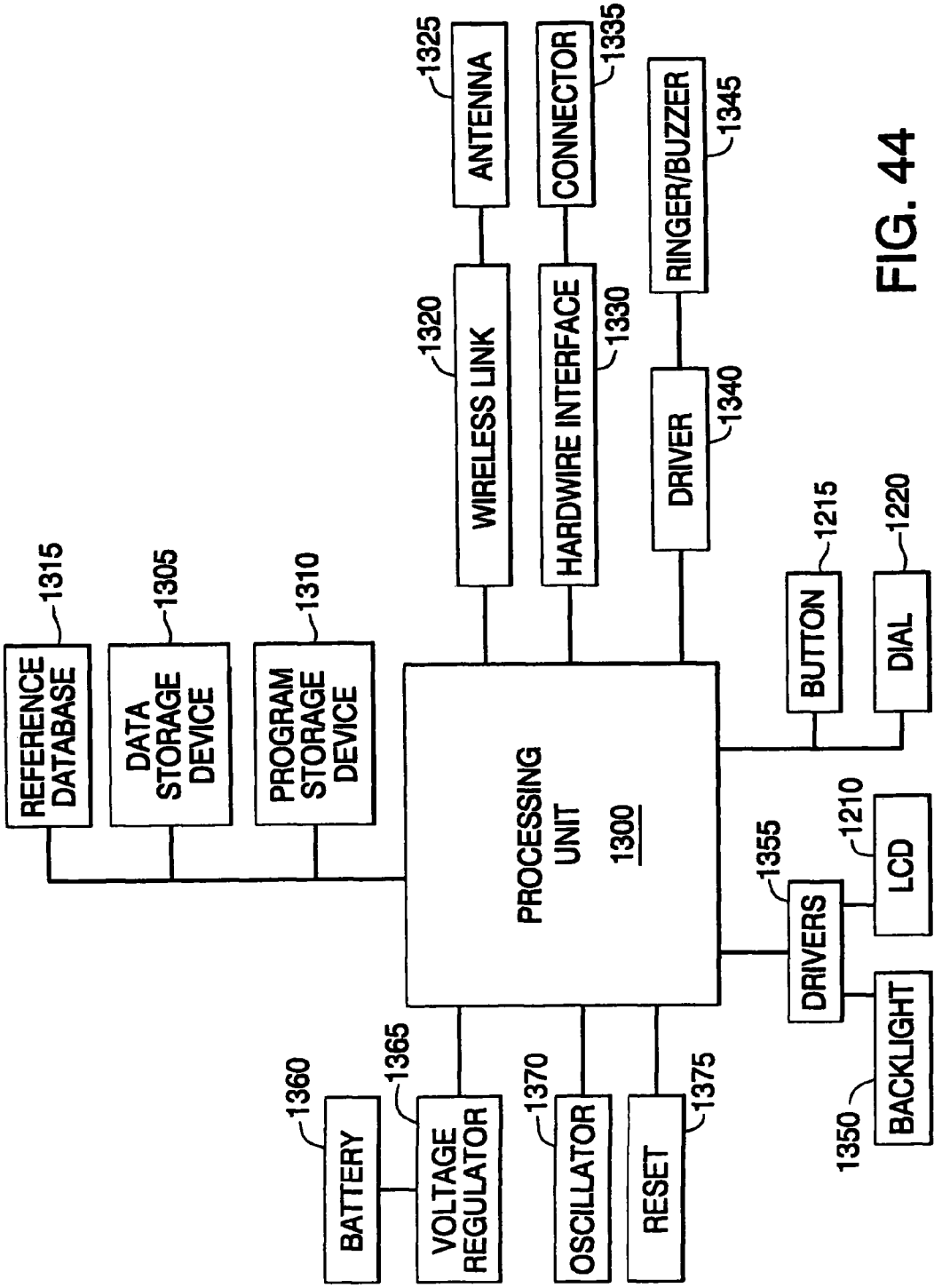
REFERENCE DATABASE
1315
DATA STORAGE DEVICE
1305
PROGRAM STORAGE DEVICE
1310
WIRELESS LINK
1320
ANTENNA
1325
HARDWIRE INTERFACE
1330
CONNECTOR
1335
DRIVER
1340
RINGER/BUZZER
1345
PROCESSING UNIT
1300
BUTTON
1215
DIAL
1220
DRIVERS
1355
LCD
1210
BACKLIGHT
1350
BATTERY
1360
VOLTAGE REGULATOR
1365
OSCILLATOR
1370
RESET
1375

FIG. 44

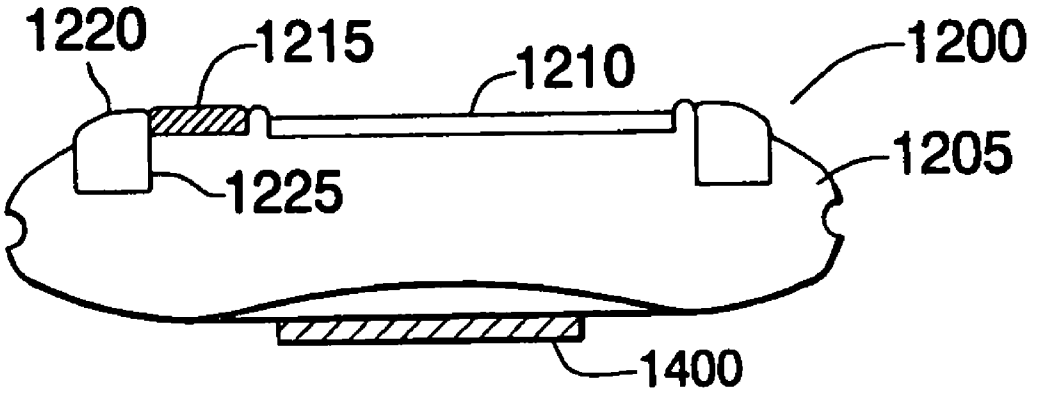

FIG. 45

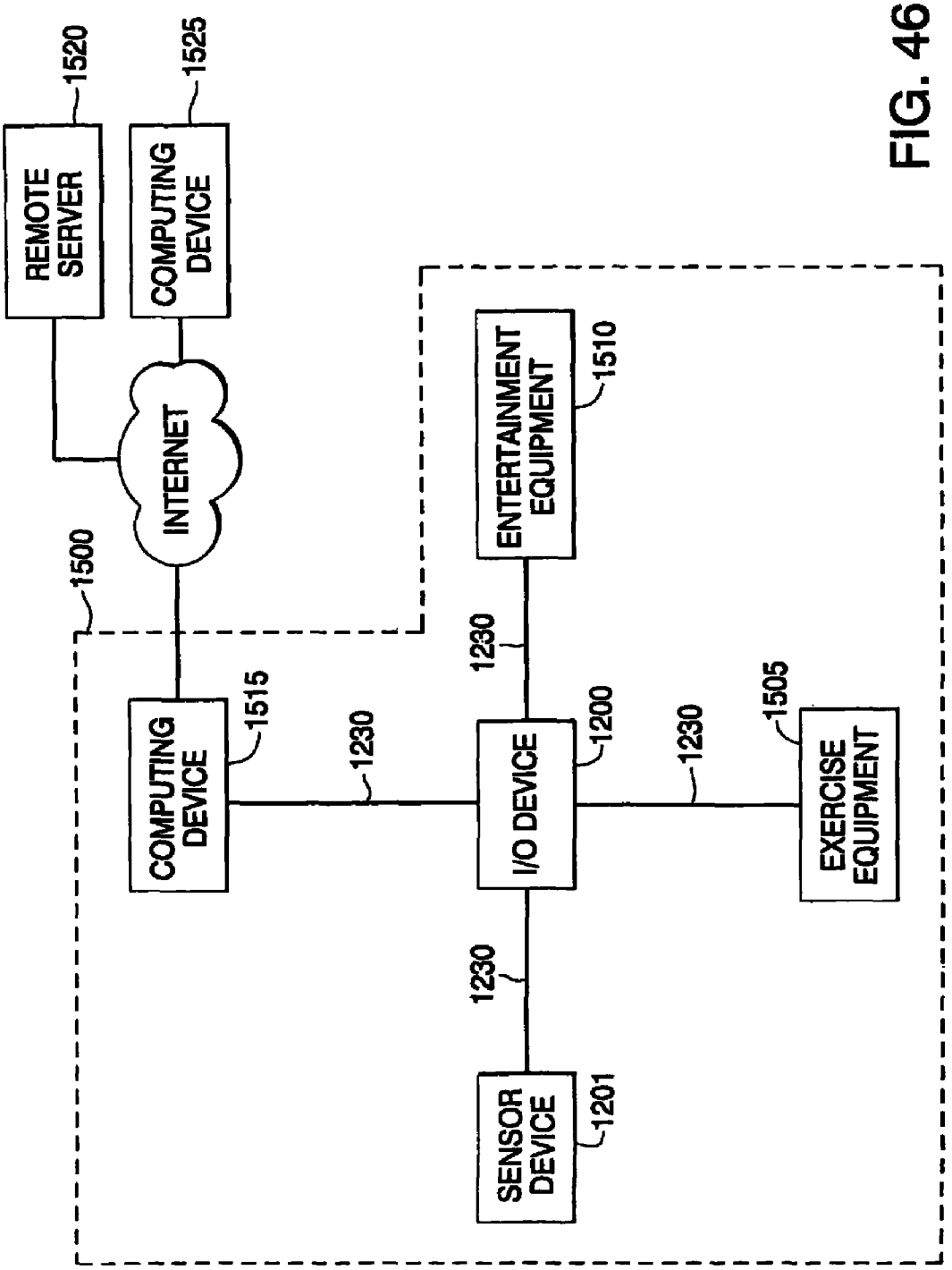
REMOTE SERVER
1520
COMPUTING DEVICE
1525
INTERNET
1500
COMPUTING DEVICE
1515
1230
I/O DEVICE
1200
1230
ENTERTAINMENT EQUIPMENT
1510
1230
EXERCISE EQUIPMENT
1505
1230
SENSOR DEVICE
1201

FIG. 46

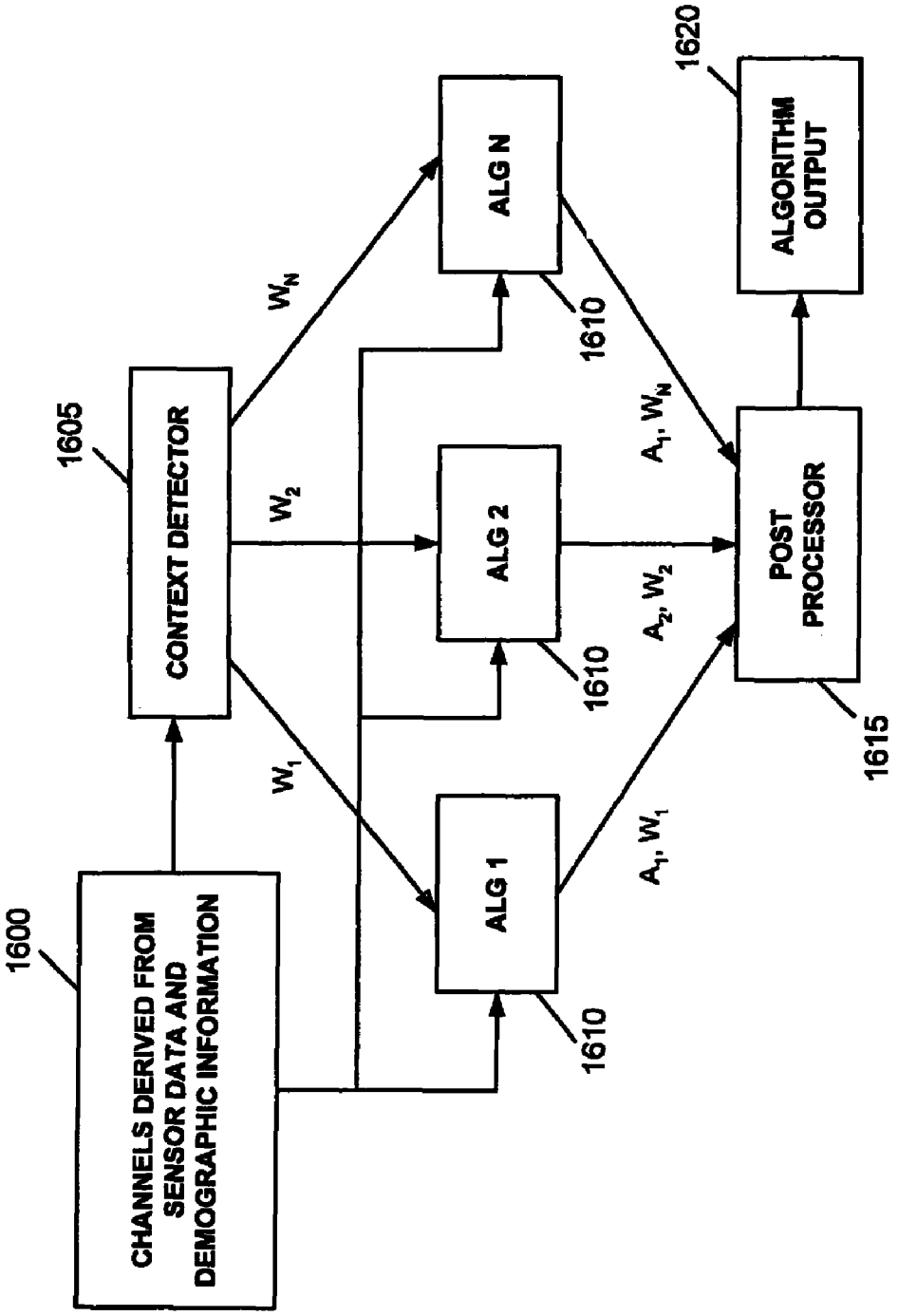
1600
CHANNELS DERIVED FROM SENSOR DATA AND DEMOGRAPHIC INFORMATION
1605
CONTEXT DETECTOR
W_1
W_2
W_N
ALG 1
ALG 2
ALG N
1610
1610
1610
A_1, W_1
A_2, W_2
A_1, W_N
POST PROCESSOR
1615
1620
ALGORITHM OUTPUT

FIG. 47

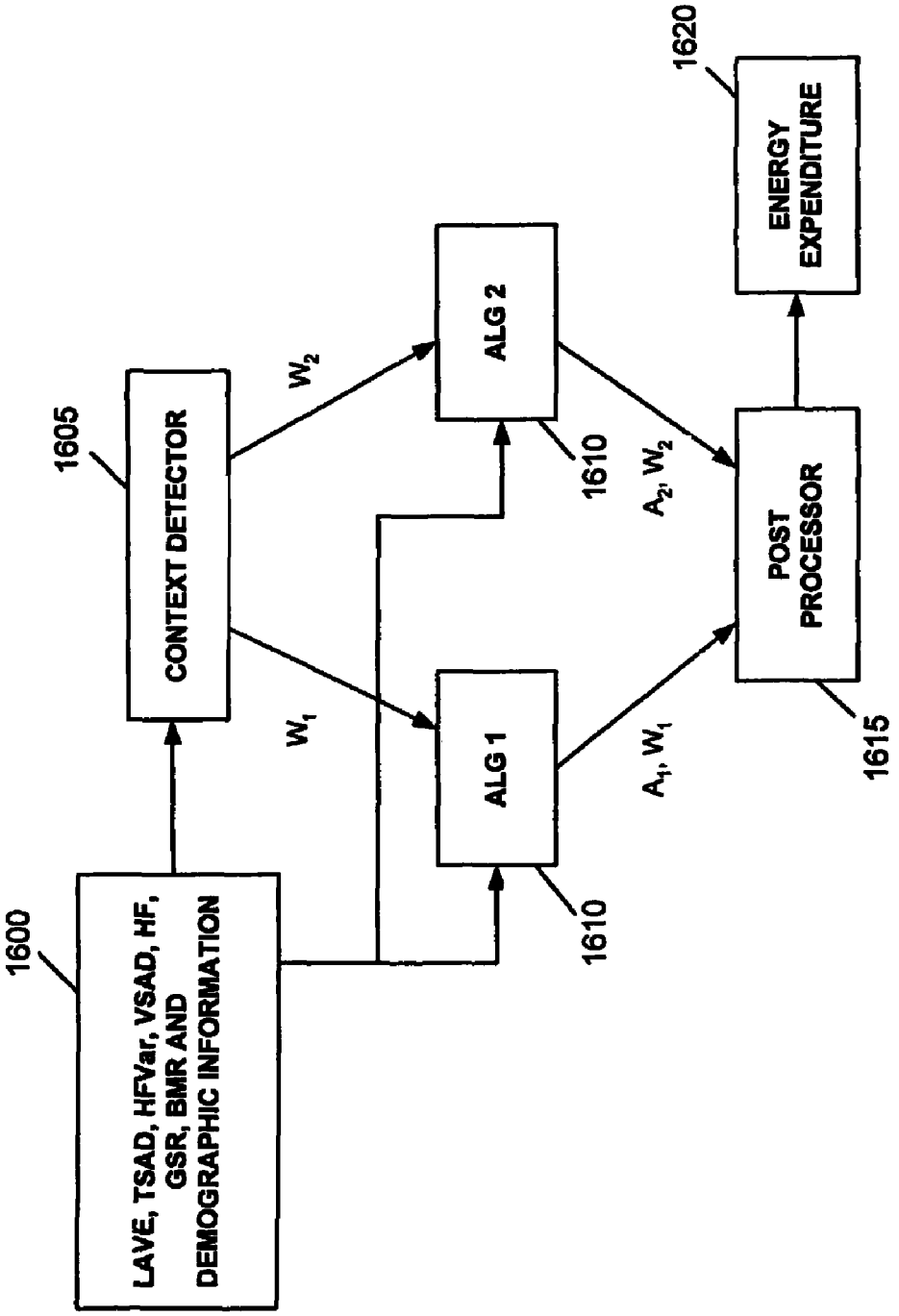
1600
LAVE, TSAD, HFVar, VSAD, HF, GSR, BMR AND DEMOGRAPHIC INFORMATION
1605
CONTEXT DETECTOR
W_1
W_2
ALG 1
ALG 2
1610
1610
A_1, W_1
A_2, W_2
POST PROCESSOR
1615
ENERGY EXPENDITURE
1620

FIG. 48

METHOD AND APPARATUS FOR AUTO JOURNALING OF CONTINUOUS OR DISCRETE BODY STATES UTILIZING PHYSIOLOGICAL AND/OR CONTEXTUAL PARAMETERS

CROSS REFERENCE TO A RELATED APPLICATION

This application claims the benefit of U.S. Provisional Application No. 60/417,163 filed on Oct. 9, 2002.

FIELD OF THE INVENTION

The present invention relates to methods and apparatuses for measuring a state parameter of an individual using signals based on one or more sensors. The present invention also relates to various methods for making such apparatuses.

BACKGROUND OF THE INVENTION

Research has shown that a large number of the top health problems in society are either caused in whole or in part by an unhealthy lifestyle. More and more, our society requires people to lead fast-paced, achievement-oriented lifestyles that often result in poor eating habits, high stress levels, lack of exercise, poor sleep habits and the inability to find the time to center the mind and relax. Recognizing this fact, people are becoming increasingly interested in establishing a healthier lifestyle.

Traditional medicine, embodied in the form of an HMO or similar organizations, does not have the time, the training, or the reimbursement mechanism to address the needs of those individuals interested in a healthier lifestyle. There have been several attempts to meet the needs of these individuals, including a perfusion of fitness programs and exercise equipment, dietary plans, self-help books, alternative therapies, and most recently, a plethora of health information web sites on the Internet. Each of these attempts are targeted to empower the individual to take charge and get healthy. Each of these attempts, however, addresses only part of the needs of individuals seeking a healthier lifestyle and ignores many of the real barriers that most individuals face when trying to adopt a healthier lifestyle. These barriers include the fact that the individual is often left to himself or herself to find motivation, to implement a plan for achieving a healthier lifestyle, to monitor progress, and to brainstorm solutions when problems arise; the fact that existing programs are directed to only certain aspects of a healthier lifestyle, and rarely come as a complete package; and the fact that recommendations are often not targeted to the unique characteristics of the individual or his life circumstances.

SUMMARY OF THE INVENTION

The present invention relates to an apparatus for measuring a state parameter of an individual including a processor, at least two sensors in electronic communication with the processor, at least one of the sensors being a physiological sensor, and a memory for storing software executable by the processor. The software includes instructions for collecting a plurality of sensor signals from the at least two sensors, and utilizing a first set of signals based on one or more of the plurality of sensor signals in a first function, the first function determining how a second set of signals based on one or more of the plurality of sensor signals is utilized in one or more second functions, each of the one or more second functions

having an output, wherein one or more of the outputs are used to predict the state parameter of the individual.

The present invention also relates to a method of measuring a state parameter of an individual, including collecting a plurality of sensor signals from at least two sensors in electronic communication with a sensor device worn on a body of the individual, at least one of the sensors being a physiological sensor, and utilizing a first set of signals based on one or more of the plurality of sensor signals in a first function, the first function determining how a second set of signals based on one or more of the plurality of sensor signals is utilized in one or more second functions, each of the one or more second functions having an output, wherein one or more of the outputs are used to predict the state parameter of the individual.

In one embodiment of either the apparatus or method, the first function recognizes one or more contexts based on the first set of signals and one or more of the second functions is chosen based on the one or more recognized contexts. The outputs of the chosen second functions are used to predict the state parameter of the individual. In another embodiment, the first function recognizes each of a plurality of contexts based on the first set of signals and each of the one or more second functions corresponds to one of the contexts. The first function assigns a weight to each of the one or more second functions based on a recognition probability associated with the corresponding context, and the outputs of the one or more second functions and the weights are used to predict the state parameter of the individual. The outputs may be combined in a post processing step to predict the state parameter. In addition, in either the apparatus or the method, the state parameter may be caloric expenditure the second functions may be regression algorithms, the contexts may comprise rest and active and, the first function may comprise a naïve Bayesian classifier. Where the state parameter is caloric expenditure, caloric consumption data for the individual may be generated and information based on the caloric expenditure data and the caloric consumption data may be displayed, such as energy balance data, rate of weight loss or gain, or information relating to one or more goals of the individual.

In one embodiment of the apparatus, the processor and the memory are included in a wearable sensor device. In another embodiment, the apparatus includes a wearable sensor device, the processor and the memory being included in a computing device located separately from the sensor device, wherein the sensor signals are transmitted from the sensor device to the computing device.

The present invention also relates to a method of making software for an apparatus for measuring a state parameter of an individual including providing a first sensor device, the first sensor device receiving a plurality of signals from at least two sensors, using the first sensor device to create a first function and one or more second functions, each of the one or more second functions having an output, the first function utilizing a first set of signals based on one or more of the plurality of sensor signals to determine how a second set of signals based on one or more of the plurality of sensor signals is utilized in the one or more second functions, wherein one or more of the outputs are used to predict the state parameter of the individual. The method further includes creating the software including instructions for: (i) receiving a second plurality of signals collected by a second sensor device substantially structurally identical to the first sensor device for a period of time; (ii) utilizing a third set of signals based on one or more of the second plurality of sensor signals in the first function to determine how a fourth set of signals based on one or more of the second plurality of sensor signals is utilized in the one or more second functions; and (iii) utilizing the one or

more outputs produced by the one or more second functions from the fourth set of signals to predict the state parameter of the individual. In the method, the step of using the sensor device to create the first function and the one or more second functions may include gathering a first set of the plurality of signals under conditions where the state parameter is present, contemporaneously gathering gold standard data relating to the state parameter, and using one or more machine learning techniques to generate the first function and the one or more second functions from the first set of the plurality of signals and the gold standard data. In addition, A the first function may recognize one or more contexts based on the first set of signals and one or more of the second functions may be chosen based on the one or more recognized contexts, wherein the outputs of the chosen second functions are used to predict the state parameter of the individual. Alternatively, the first function may recognize each of a plurality of contexts based on the first set of signals and each of the one or more second functions may correspond to one of the contexts, wherein the first function assigns a weight to each of the one or more second functions based on a recognition probability associated with the corresponding context, and wherein the outputs of the one or more second functions and the weights are used to predict the state parameter of the individual.

One specific embodiment of the present invention relates to a method of measuring energy expenditure of an individual including collecting a plurality of sensor signals from at least two of a body motion sensor, a heat flux sensor, a skin conductance sensor, and a skin temperature sensor, each in electronic communication with a sensor device worn on a body of the individual, and utilizing a first set of signals based on one or more of the plurality of sensor signals in one or more functions to predict the energy expenditure of the individual. The utilizing step may include utilizing the first set of signals in a first function, the first function determining how a second set of signals based on one or more of the plurality of sensor signals is utilized in one or more second functions, each of the one or more second functions having an output, wherein one or more of the outputs are used to predict the energy expenditure of the individual. In addition, the collecting step may include collecting the plurality of sensor signals from a body motion sensor, a heat flux sensor, and a skin conductance sensor, the second set of signals comprising a heat flux high gain average variance (HFvar), a vector sum of transverse and longitudinal accelerometer SADs (VSAD), and a galvanic skin response low gain (GSR), wherein the second functions have the form of A*VSAD+B*HF+C*GSR+D*BMR+E, wherein A, B, C, D and E are constants and BMR is a basal metabolic rate for the individual.

The present invention also relates to an apparatus for measuring energy expenditure of an individual including a processor, at least two of a body motion sensor, a heat flux sensor, a skin conductance sensor, and a skin temperature sensor in electronic communication with the processor, and a memory storing software executable by the processor. The software includes instructions for collecting a plurality of sensor signals from the at least two of a body motion sensor, a heat flux sensor, a skin conductance sensor, and a skin temperature sensor, and utilizing a first set of signals based on one or more of the plurality of sensor signals in one or more functions to predict the energy expenditure of the individual. The utilizing instruction may include utilizing the first set of signals in a first function, the first function determining how a second set of signals based on one or more of the plurality of sensor signals is utilized in one or more second functions, each of the one or more second functions having an output, wherein one or more of the outputs are used to predict the energy expenditure of the individual. The collecting instruction may include collecting the plurality of sensor signals from a body motion sensor, a heat flux sensor, and a skin conductance sensor, the second set of signals comprising a heat flux high gain average variance (HFvar), a vector sum of transverse and longitudinal accelerometer SADs (VSAD), and a galvanic skin response low gain (GSR), wherein the second functions have the form of A*VSAD+B*HF+C*GSR+D*BMR+E, wherein A, B, C, D and E are constants and BMR is a basal metabolic rate for the individual.

The present invention also relates to a method of making software for an apparatus for measuring energy expenditure of an individual, including providing a first sensor device, the first sensor device receiving a plurality of signals from at least two of a body motion sensor, a heat flux sensor, a skin conductance sensor, and a skin temperature sensor, and using the first sensor device to create one or more functions that predict the energy expenditure of the individual using a first set of signals based on one or more of the plurality of sensor signals. The method further includes creating the software including instructions for: (i) receiving a second plurality of signals collected by a second sensor device substantially structurally identical to the first sensor device for a period of time, the second sensor device receiving the second plurality of signals from at least two of a body motion sensor, a heat flux sensor, a skin conductance sensor, and a skin temperature sensor; and (ii) utilizing a second set of signals based on one or more of the second plurality of sensor signals in the one or more functions to predict the energy expenditure of the individual. The step of using the sensor device to create the one or more functions may include gathering a first set of the plurality of signals under conditions where energy expenditure data for the individual is present, contemporaneously gathering gold standard data relating to the energy expenditure data for the individual, and using one or more machine learning techniques to generate the one or more functions from the first set of the plurality of signals and the gold standard data. In addition, the utilizing instruction may include utilizing the second set of signals in a first function, the first function determining how a third set of signals based on one or more of the second plurality of sensor signals is utilized in one or more second functions, each of the one or more second functions having an output; wherein one or more of the outputs are used to predict the energy expenditure of the individual.

In yet another embodiment, the present invention relates to an apparatus for automatically measuring a first state parameter of an individual, including a processor, one or more sensors for generating one or more signals over a period of time, the processor receiving the one or more signals, and a memory storing software executable by the processor. The software includes instructions for inputting one or more signal channels based on the one or more signals into a first function having a first output that predicts one or more second state parameters of the individual and either the first state parameter or an indicator of the first state parameter, wherein the first state parameter may be obtained from the indicator based on a first relationship between the first state parameter and the indicator, inputting the one or more signal channels into a second function having a second output that predicts the one or more second state parameters but not the first state parameter or the indicator of the first state parameter, and obtaining either the first state parameter or the indicator from the first and second outputs based on a second relationship between the first function and the second function, and, if the indicator is obtained, obtaining the first state parameter from the indicator based on the first relationship.

The present invention also relates to a method of automatically measuring a first state parameter of an individual, including collecting for a period of time one or more signals from one or more sensors in electronic communication with a sensor device worn on a body of the individual, inputting one or more signal channels based on the one or more signals into a first function having a first output that predicts one or more second state parameters of the individual and either the first state parameter or an indicator of the first state parameter, wherein the first state parameter may be obtained from the indicator based on a first relationship between the first state parameter and the indicator, inputting the one or more signal channels into a second function having a second output that predicts the one or more second state parameters but not the first state parameter or the indicator of the first state parameter, and obtaining either the first state parameter or the indicator from the first and second outputs based on a second relationship between the first function and the second function, and, if the indicator is obtained, obtaining the first state parameter from the indicator based on the first relationship.

In either the method or the apparatus, the first state parameter may be a number of calories consumed by the individual during the period of time. In such an embodiment, the indicator may include a first effect on the body of food consumed, and in particular, the indicator may be the thermic effect of food. In the case of thermic effect of food, the first output may comprise total energy expenditure, wherein the one or more second state parameters include basal metabolic rate, activity energy expenditure and adaptive thermogenesis, and the first state parameter may be obtained from the indicator by dividing the indicator by 0.1. In one specific embodiment, the software further includes instructions for generating caloric expenditure data for the individual for the period of time from one or more of the one or more signal channels and displaying information based on the caloric expenditure data and the number of calories consumed by the individual. The apparatus may include a display, such as part of a separate I/O device, for displaying the information based on the caloric expenditure data and the number of calories consumed by the individual.

In yet another embodiment, the present invention relates to a method of making software for an apparatus for automatically measuring a first state parameter of an individual. The method includes providing a first sensor device, the first sensor device receiving one or more signals from one or more sensors, using the first sensor device to create a first function having a first output that predicts one or more second state parameters of the individual and either the first state parameter or an indicator of the first state parameter, wherein the first state parameter may be obtained from the indicator based on a first relationship between the first state parameter and the indicator, the first function taking as inputs one or more signal channels based on the one or more signals, and using the first sensor device to create a second function having a second output that predicts the one or more second state parameters but not the first state parameter or the indicator of the first state parameter, the second function taking as inputs the one or more signal channels. The method further includes creating the software including instructions for: (i) receiving a second one or more signals collected by a second sensor device substantially structurally identical to the first sensor device for a period of time; (ii) inputting a second one or more signal channels based on the second one or more signals into the first function and the second function for generating the first output and the second output, respectively; and (iii) obtaining either the first state parameter or the indicator from the first and second outputs generated in the inputting step based on a second relationship between the first function and the second function, and, if the indicator is obtained, obtaining the first state parameter from the indicator based on the first relationship. The step of using the sensor device to create the first function may include gathering a first set of the one or more signals under conditions where the second state parameters and either the first state parameter or the indicator are present, contemporaneously gathering gold standard data relating to the second state parameters and either the first state parameter or the indicator, and using one or more machine learning techniques to generate the first function from the first set of one or more signals and the gold standard data, and the step of using the sensor device to create the second function may include gathering a second set of the one or more signals under conditions where neither the first state parameter nor the indicator are present, contemporaneously gathering second gold standard data relating to the second state parameters but not the first state parameter or the indicator, and using one or more machine learning techniques to generate the second function from the second set of one or more signals and the second gold standard data.

In still another alternate embodiment, the present invention relates to a method of measuring caloric consumption of an individual for a time period, including determining a weight differential for the individual between a beginning of the time period and an end of the time period, multiplying the weight differential by a constant, such as 3500, to obtain a caloric differential, measuring a caloric expenditure of the individual for the time period using a wearable sensor device having one or more sensors, and determining the caloric consumption from the caloric differential and the caloric expenditure. The step of measuring the caloric expenditure may comprises collecting a plurality of sensor signals from at least two sensors in electronic communication with the sensor device, at least one of the sensors being a physiological sensor, and utilizing a first set of signals based on one or more of the plurality of sensor signals in a first function, the first function determining how a second set of signals based on one or more of the plurality of sensor signals is utilized in one or more second functions, each of the one or more second functions having an output, wherein one or more of the outputs are used to predict the caloric expenditure.

BRIEF DESCRIPTION OF THE DRAWINGS

Further features and advantages of the present invention will be apparent upon consideration of the following detailed description of the present invention, taken in conjunction with the following drawings, in which like reference characters refer to like parts, and in which:

FIG. **1** is a diagram of an embodiment of a system for monitoring physiological data and lifestyle over an electronic network according to the present invention;

FIG. **2** is a block diagram of an embodiment of the sensor device shown in FIG. **1**;

FIG. **3** is a block diagram of an embodiment of the central monitoring unit shown in FIG. **1**;

FIG. **4** is a block diagram of an alternate embodiment of the central monitoring unit shown in FIG. **1**;

FIG. **5** is a representation of a preferred embodiment of the Health Manager web page according to an aspect of the present invention;

FIG. **6** is a representation of a preferred embodiment of the nutrition web page according to an aspect of the present invention;

FIG. **7** is a representation of a preferred embodiment of the activity level web page according to an aspect of the present invention;

FIG. **8** is a representation of a preferred embodiment of the mind centering web page according to an aspect of the present invention;

FIG. **9** is a representation of a preferred embodiment of the sleep web page according to an aspect of the present invention;

FIG. **10** is a representation of a preferred embodiment of the daily activities web page according to an aspect of the present invention;

FIG. **11** is a representation of a preferred embodiment of the Health Index web page according to an aspect of the present invention;

FIG. **12** is a front view of a specific embodiment of the sensor device shown in FIG. **1**;

FIG. **13** is a back view of a specific embodiment of the sensor device shown in FIG. **1**;

FIG. **14** is a side view of a specific embodiment of the sensor device shown in FIG. **1**;

FIG. **15** is a bottom view of a specific embodiment of the sensor device shown in FIG. **1**;

FIGS. **16** and **17** are front perspective views of a specific embodiment of the sensor device shown in FIG. **1**;

FIG. **18** is an exploded side perspective view of a specific embodiment of the sensor device shown in FIG. **1**;

FIG. **19** is a side view of the sensor device shown in FIGS. **12** through **18** inserted into a battery recharger unit;

FIG. **20** is a block diagram illustrating all of the components either mounted on or coupled to the printed circuit board forming a part of the sensor device shown in FIGS. **12** through **18**;

FIG. **21** is a block diagram of an apparatus for monitoring health, wellness and fitness according to an alternate embodiment of the present invention.

FIG. **22** is a front view of an alternate embodiment of a sensor device according to the present invention;

FIG. **23** is a back view of an alternate embodiment of a sensor device according to the present invention;

FIG. **24** is a cross-sectional view of the sensor device shown in FIG. **22** taken along lines A-A;

FIG. **25** is a cross-sectional view of the sensor device shown in FIG. **22** taken along lines B-B;

FIG. **26** is a cross-sectional view of the sensor device shown in FIG. **22** taken along lines A-A showing the internal components of the housing of the sensor device;

FIG. **27** is a block diagram illustrating the components mounted on or coupled to the printed circuit board forming a part of an embodiment of the sensor device shown in FIGS. **22** through **26**;

FIG. **28** is a front view of an alternate embodiment of a sensor device according to the present invention including an LCD;

FIG. **29** is a block diagram illustrating the components mounted on or coupled to the printed circuit board forming a part of an alternate embodiment of the sensor device shown in FIGS. **22** through **26**;

FIGS. **30** and **31** are isometric views of an alternate embodiment of a sensor device according to the present invention having a housing adapted to be removably attached to a flexible section;

FIG. **32** is an isometric view of a further alternate embodiment of a sensor device according to the present invention having a housing adapted to be removably attached to a flexible section;

FIG. **33** is an isometric view of an embodiment of a sensor device having adjustable operating parameters according to an aspect of the present invention;

FIG. **34** is an isometric view of an alternate embodiment of a sensor device according to the present invention having a housing having an adhesive material on an external surface thereof for removably attaching the housing to the body;

FIGS. **35**A and B are cross-sectional views of a housing for a prior art sensor device;

FIGS. **36**C through H are cross-sectional views of various embodiments of a housing for a sensor device according to an aspect of the present invention taken along lines C-C in FIG. **23**.

FIG. **36**A is a cross-sectional view of a housing for a prior art sensor device;

FIGS. **35**C through H are cross-sectional views of various embodiments of a housing for a sensor device according to an aspect of the present invention taken along lines C-C in FIG. **23**.

FIG. **37** is an isometric view of an embodiment of a housing for a sensor device according to the present invention having a bottom or inner surface having a concavity in one direction and a convexity in another direction;

FIGS. **38**A through D are cross-sectional views of a housing for a sensor device having a flat top surface and flat lateral ends;

FIGS. **39**A through F are cross-sectional views of various embodiments of a housing for a sensor device having surfaces designed to deflect objects and prevent movement of the housing;

FIG. **39**G is a cross-sectional view of the housing shown in FIG. **39**E attached to a flexible section;

FIG. **40** is a top plan view of a data input and output device according to the present invention;

FIG. **41** is a partial cross-sectional view of the data input and output device shown in FIG. **40** taken along lines A-A in FIG. **40**;

FIG. **42** is a block diagram illustrating the operation of prior art software that enables a prior art input device having a dial and a button to control the operation of a computer by identifying and selecting hot spots;

FIGS. **43**A-F is a top plan view of a data input and output device according to an embodiment of the present invention in which energy related data for an individual is collected or generated by the data input and output device and a sensor device in electrical communication therewith and displayed by the data input and output device on an LCD provided thereon;

FIGS. **43**G and H are a plan views of interfaces for entering nutrition information into a data input and output device according to an alternate embodiment of the present invention;

FIGS. **43**I and J are scatter plots between estimates of the caloric content in meals consumed using an embodiment of the present invention and caloric content computed from full diet diary entries;

FIG. **44** is a block diagram showing the components attached or otherwise coupled to a printed circuit board housed within a data input and output device according to an embodiment of the present invention;

FIG. **45** is a partial cross-sectional view of a data input and output device according to an alternate embodiment of the present invention having one or more sensors that enable it to collect data indicative of physiological and/or contextual parameters;

FIG. **46** is a block diagram of an alternate embodiment of the present invention in which a data input and output device

acts as a hub or terminal for collection and, optionally, processing of data from a variety of sources;

FIG. **47** is a block diagram showing the format of algorithms that are developed according to an aspect of the present invention; and

FIG. **48** is a block diagram illustrating an example algorithm for predicting energy expenditure according to the present invention.

DESCRIPTION OF THE PREFERRED EMBODIMENTS

In general, according to the present invention, data relating to the physiological state, the lifestyle and certain contextual parameters of an individual is collected and transmitted, either subsequently or in real-time, to a site, preferably remote from the individual, where it is stored for later manipulation and presentation to a recipient, preferably over an electronic network such as the Internet. Contextual parameters as used herein means parameters relating to the environment, surroundings and location of the individual, including, but not limited to, air quality, sound quality, ambient temperature, global positioning and the like. Referring to FIG. **1**, located at user location **5** is sensor device **10** adapted to be placed in proximity with at least a portion of the human body. Sensor device **10** is preferably worn by an individual user on his or her body, for example as part of a garment such as a form fitting shirt, or as part of an arm band or the like. Sensor device **10**, includes one or more sensors, which are adapted to generate signals in response to physiological characteristics of an individual, and a microprocessor. Proximity as used herein means that the sensors of sensor device **10** are separated from the individual's body by a material or the like, or a distance such that the capabilities of the sensors are not impeded.

Sensor device **10** generates data indicative of various physiological parameters of an individual, such as the individual's heart rate, pulse rate, beat-to-beat heart variability, EKG or ECG, respiration rate, skin temperature, core body temperature, heat flow off the body, galvanic skin response or GSR, EMG, EEG, EOG, blood pressure, body fat, hydration level, activity level, oxygen consumption, glucose or blood sugar level, body position, pressure on muscles or bones, and UV radiation exposure and absorption. In certain cases, the data indicative of the various physiological parameters is the signal or signals themselves generated by the one or more sensors and in certain other cases the data is calculated by the microprocessor based on the signal or signals generated by the one or more sensors. Methods for generating data indicative of various physiological parameters and sensors to be used therefor are well known. Table 1 provides several examples of such well known methods and shows the parameter in question, the method used, the sensor device used, and the signal that is generated. Table 1 also provides an indication as to whether further processing based on the generated signal is required to generate the data.

TABLE 1

Parameter	Method	Sensor	Signal	Further Processing
Heart Rate	EKG	2 Electrodes	DC Voltage	Yes
Pulse Rate	BVP	LED Emitter and Optical Sensor	Change in Resistance	Yes
Beat-to-Beat Variability	Heart Rate	2 Electrodes	DC Voltage	Yes
EKG	Skin Surface Potentials	3-10 Electrodes	DC Voltage	No
Respiration Rate	Chest Volume Change	Strain Gauge	Change in Resistance	Yes
Skin Temperature	Surface Temperature Probe	Thermistors	Change in Resistance	Yes
Core Temperature	Esophageal or Rectal Probe	Thermistors	Change in Resistance	Yes
Heat Flow	Heat Flux	Thermopile	DC Voltage	Yes
Galvanic Skin Response	Skin Conductance	2 Electrodes	Change in Resistance	No
EMG	Skin Surface Potentials	3 Electrodes	DC Voltage	No
EEG	Skin Surface Potentials	Multiple Electrodes	DC Voltage	Yes
EOG	Eye Movement	Thin Film Piezoelectric Sensors	DC Voltage	Yes
Blood Pressure	Non-Invasive Korotkuff Sounds	Electronic Sphygromarometer	Change in Resistance	Yes
Body Fat	Body Impedance	2 Active Electrodes	Change in Impedance	Yes
Activity in Interpreted G Shocks per Minute	Body Movement	Accelerometer	DC Voltage, Capacitance Changes	Yes
Oxygen Consumption	Oxygen Uptake	Electro-chemical	DC Voltage Change	Yes
Glucose Level	Non-Invasive	Electro-chemical	DC Voltage Change	Yes
Body Position (e.g. supine, erect, sitting)	N/A	Mercury Switch Array	DC Voltage Change	Yes
Muscle Pressure	N/A	Thin Film Piezoelectric Sensors	DC Voltage Change	Yes
UV Radiation Absorption	N/A	UV Sensitive Photo Cells	DC Voltage Change	Yes

The types of data listed in Table 1 are intended to be examples of the types of data that can be generated by sensor device **10**. It is to be understood that other types of data relating to other parameters can be generated by sensor device **10** without departing from the scope of the present invention.

The microprocessor of sensor device **10** may be programmed to summarize and analyze the data. For example, the microprocessor can be programmed to calculate an average, minimum or maximum heart rate or respiration rate over a defined period of time, such as ten minutes. Sensor device **10** may be able to derive information relating to an individual's physiological state based on the data indicative of one or more physiological parameters. The microprocessor of sensor device **10** is programmed to derive such information using known methods based on the data indicative of one or more physiological parameters. Table 2 provides examples of the type of information that can be derived, and indicates some of the types of data that can be used therefor.

TABLE 2

Derived Information	Data Used
Ovulation	Skin temperature, core temperature, oxygen consumption
Sleep onset/ wake	Beat-to-beat variability, heart rate, pulse rate, respiration rate, skin temperature, core temperature, heat flow, galvanic skin response, EMG, EEG, EOG, blood pressure, oxygen consumption
Calories burned	Heart rate, pulse rate, respiration rate, heat flow, activity, oxygen consumption
Basal metabolic rate	Heart rate, pulse rate, respiration rate, heat flow, activity, oxygen consumption
Basal temperature	Skin temperature, core temperature
Activity level	Heart rate, pulse rate, respiration rate, heat flow, activity, oxygen consumption
Stress level	EKG, beat-to-beat variability, heart rate, pulse rate, respiration rate, skin temperature, heat flow, galvanic skin response, EMG, EEG, blood pressure, activity, oxygen consumption
Relaxation level	EKG, beat-to-beat variability, heart rate, pulse rate, respiration rate, skin temperature, heat flow, galvanic skin response, EMG, EEG, blood pressure, activity, oxygen consumption
Maximum oxygen consumption rate	EKG, heart rate, pulse rate, respiration rate, heat flow, blood pressure, activity, oxygen consumption
Rise time or the time it takes to rise from a resting rate to 85% of a target maximum	Heart rate, pulse rate, heat flow, oxygen consumption
Time in zone or the time heart rate was above 85% of a target maximum	Heart rate, pulse rate, heat flow, oxygen consumption
Recovery time or the time it takes heart rate to return to a resting rate after heart rate was above 85% of a target maximum	Heart rate, pulse rate, heat flow, oxygen consumption

Additionally, sensor device **10** may also generate data indicative of various contextual parameters relating to the environment surrounding the individual. For example, sensor device **10** can generate data indicative of the air quality, sound level/quality, light quality or ambient temperature near the individual, or even the global positioning of the individual. Sensor device **10** may include one or more sensors for generating signals in response to contextual characteristics relating to the environment surrounding the individual, the signals ultimately being used to generate the type of data described above. Such sensors are well known, as are methods for generating contextual parametric data such as air quality, sound level/quality, ambient temperature and global positioning.

FIG. **2** is a block diagram of an embodiment of sensor device **10**. Sensor device **10** includes at least one sensor **12** and microprocessor **20**. Depending upon the nature of the signal generated by sensor **12**, the signal can be sent through one or more of amplifier **14**, conditioning circuit **16**, and analog-to-digital converter **18**, before being sent to microprocessor **20**. For example, where sensor **12** generates an analog signal in need of amplification and filtering, that signal can be sent to amplifier **14**, and then on to conditioning circuit **16**, which may, for example, be a band pass filter. The amplified and conditioned analog signal can then be transferred to analog-to-digital converter **18**, where it is converted to a digital signal. The digital signal is then sent to microprocessor **20**. Alternatively, if sensor **12** generates a digital signal, that signal can be sent directly to microprocessor **20**.

A digital signal or signals representing certain physiological and/or contextual characteristics of the individual user may be used by microprocessor **20** to calculate or generate data indicative of physiological and/or contextual parameters of the individual user. Microprocessor **20** is programmed to derive information relating to at least one aspect of the individual's physiological state. It should be understood that microprocessor **20** may also comprise other forms of processors or processing devices, such as a microcontroller, or any other device that can be programmed to perform the functionality described herein.

The data indicative of physiological and/or contextual parameters can, according to one embodiment of the present invention, be sent to memory **22**, such as flash memory, where it is stored until uploaded in the manner to be described below. Although memory **22** is shown in FIG. **2** as a discrete element, it will be appreciated that it may also be part of microprocessor **20**. Sensor device **10** also includes input/output circuitry **24**, which is adapted to output and receive as input certain data signals in the manners to be described herein. Thus, memory **22** of the sensor device **10** will build up, over time, a store of data relating to the individual user's body and/or environment. That data is periodically uploaded from sensor device **10** and sent to remote central monitoring unit **30**, as shown in FIG. **1**, where it is stored in a database for subsequent processing and presentation to the user, preferably through a local or global electronic network such as the Internet. This uploading of data can be an automatic process that is initiated by sensor device **10** periodically or upon the happening of an event such as the detection by sensor device **10** of a heart rate below a certain level, or can be initiated by the individual user or some third party authorized by the user, preferably according to some periodic schedule, such as every day at 10:00 p.m. Alternatively, rather than storing data in memory **22**, sensor device **10** may continuously upload data in real time.

The uploading of data from sensor device **10** to central monitoring unit **30** for storage can be accomplished in various ways. In one embodiment, the data collected by sensor device **10** is uploaded by first transferring the data to personal com-

puter **35** shown in FIG. **1** by means of physical connection **40**, which, for example, may be a serial connection such as an RS232 or USB port. This physical connection may also be accomplished by using a cradle, not shown, that is electronically coupled to personal computer **35** into which sensor device **10** can be inserted, as is common with many commercially available personal digital assistants. The uploading of data could be initiated by then pressing a button on the cradle or could be initiated automatically upon insertion of sensor device **10**. The data collected by sensor device **10** may be uploaded by first transferring the data to personal computer **35** by means of short-range wireless transmission, such as infrared or RF transmission, as indicated at **45**.

Once the data is received by personal computer **35**, it is optionally compressed and encrypted by any one of a variety of well known methods and then sent out over a local or global electronic network, preferably the Internet, to central monitoring unit **30**. It should be noted that personal computer **35** can be replaced by any computing device that has access to and that can transmit and receive data through the electronic network, such as, for example, a personal digital assistant such as the Palm VII sold by Palm, Inc., or the Blackberry 2-way pager sold by Research in Motion, Inc.

Alternatively, the data collected by sensor device **10**, after being encrypted and, optionally, compressed by microprocessor **20**, may be transferred to wireless device **50**, such as a 2-way pager or cellular phone, for subsequent long distance wireless transmission to local telco site **55** using a wireless protocol such as e-mail or as ASCII or binary data. Local telco site **55** includes tower **60** that receives the wireless transmission from wireless device **50** and computer **65** connected to tower **60**. According to the preferred embodiment, computer **65** has access to the relevant electronic network, such as the Internet, and is used to transmit the data received in the form of the wireless transmission to the central monitoring unit **30** over the Internet. Although wireless device **50** is shown in FIG. **1** as a discrete device coupled to sensor device **10**, it or a device having the same or similar functionality may be embedded as part of sensor device **10**.

Sensor device **10** may be provided with a button to be used to time stamp events such as time to bed, wake time, and time of meals. These time stamps are stored in sensor device **10** and are uploaded to central monitoring unit **30** with the rest of the data as described above. The time stamps may include a digitally recorded voice message that, after being uploaded to central monitoring unit **30**, are translated using voice recognition technology into text or some other information format that can be used by central monitoring unit **30**.

In addition to using sensor device **10** to automatically collect physiological data relating to an individual user, a kiosk could be adapted to collect such data by, for example, weighing the individual, providing a sensing device similar to sensor device **10** on which an individual places his or her hand or another part of his or her body, or by scanning the individual I s body using, for example, laser technology or an iStat blood analyzer. The kiosk would be provided with processing capability as described herein and access to the relevant electronic network, and would thus be adapted to send the collected data to the central monitoring unit **30** through the electronic network. A desktop sensing device, again similar to sensor device **10**, on which an individual places his or her hand or another part of his or her body may also be provided. For example, such a desktop sensing device could be a blood pressure monitor in which an individual places his or her arm. An individual might also wear a ring having a sensor device **10** incorporated therein. A base, not shown, could then be provided which is adapted to be coupled to the ring. The desktop sensing device or the base just described may then be coupled to a computer such as personal computer **35** by means of a physical or short range wireless connection so that the collected data could be uploaded to central monitoring unit **30** over the relevant electronic network in the manner described above. A mobile device such as, for example, a personal digital assistant, might also be provided with a sensor device **10** incorporated therein. Such a sensor device **10** would be adapted to collect data when mobile device is placed in proximity with the individual's body, such as by holding the device in the palm of one's hand, and upload the collected data to central monitoring unit **30** in any of the ways described herein.

Furthermore, in addition to collecting data by automatically sensing such data in the manners described above, individuals can also manually provide data relating to various life activities that is ultimately transferred to and stored at central monitoring unit **30**. An individual user can access a web site maintained by central monitoring unit **30** and can directly input information relating to life activities by entering text freely, by responding to questions posed by the web site, or by clicking through dialog boxes provided by the web site. Central monitoring unit **30** can also be adapted to periodically send electronic mail messages containing questions designed to elicit information relating to life activities to personal computer **35** or to some other device that can receive electronic mail, such as a personal digital assistant, a pager, or a cellular phone. The individual would then provide data relating to life activities to central monitoring unit **30** by responding to the appropriate electronic mail message with the relevant data. Central monitoring unit **30** may also be adapted to place a telephone call to an individual user in which certain questions would be posed to the individual user. The user could respond to the questions by entering information using a telephone keypad, or by voice, in which case conventional voice recognition technology would be used by central monitoring unit **30** to receive and process the response. The telephone call may also be initiated by the user, in which case the user could speak to a person directly or enter information using the keypad or by voice/voice recognition technology. Central monitoring unit **30** may also be given access to a source of information controlled by the user, for example the user's electronic calendar such as that provided with the Outlook product sold by Microsoft Corporation of Redmond, Wash., from which it could automatically collect information. The data relating to life activities may relate to the eating, sleep, exercise, mind centering or relaxation, and/or daily living habits, patterns and/or activities of the individual. Thus, sample questions may include: What did you have for lunch today? What time did you go to sleep last night? What time did you wake up this morning? How long did you run on the treadmill today?

Feedback may also be provided to a user directly through sensor device **10** in a visual form, for example through an LED or LCD or by constructing sensor device **10**, at least in part, of a thermochromatic plastic, in the form of an acoustic signal or in the form of tactile feedback such as vibration. Such feedback may be a reminder or an alert to eat a meal or take medication or a supplement such as a vitamin, to engage in an activity such as exercise or meditation, or to drink water when a state of dehydration is detected. Additionally, a reminder or alert can be issued in the event that a particular physiological parameter such as ovulation has been detected, a level of calories burned during a workout has been achieved or a high heart rate or respiration rate has been encountered.

As will be apparent to those of skill in the art, it may be possible to Adownload@ data from central monitoring unit

30 to sensor device 10. The flow of data in such a download process would be substantially the reverse of that described above with respect to the upload of data from sensor device 10. Thus, it is possible that the firmware of microprocessor 20 of sensor device 10 can be updated or altered remotely, i.e., the microprocessor can be reprogrammed, by downloading new firmware to sensor device 10 from central monitoring unit 30 for such parameters as timing and sample rates of sensor device 10. Also, the reminders/alerts provided by sensor device 10 may be set by the user using the web site maintained by central monitoring unit 30 and subsequently downloaded to the sensor device 10.

Referring to FIG. 3, a block diagram of an embodiment of central monitoring unit 30 is shown. Central monitoring unit 30 includes CSU/DSU 70 which is connected to router 75, the main function of which is to take data requests or traffic, both incoming and outgoing, and direct such requests and traffic for processing or viewing on the web site maintained by central monitoring unit 30. Connected to router 75 is firewall 80. The main purpose of firewall 80 is to protect the remainder of central monitoring unit 30 from unauthorized or malicious intrusions. Switch 85, connected to firewall 80, is used to direct data flow between middleware servers 95*a* through 95*c* and database server 110. Load balancer 90 is provided to spread the workload of incoming requests among the identically configured middleware servers 95*a* through 95*c*. Load balancer 90, a suitable example of which is the F5 ServerIron product sold by Foundry Networks, Inc. of San Jose, Calif., analyzes the availability of each middleware server 95*a* through 95*c*, and the amount of system resources being used in each middleware server 95*a* through 95*c*, in order to spread tasks among them appropriately.

Central monitoring unit 30 includes network storage device 100, such as a storage area network or SAN, which acts as the central repository for data. In particular, network storage device 100 comprises a database that stores all data gathered for each individual user in the manners described above. An example of a suitable network storage device 100 is the Symmetrix product sold by EMC Corporation of Hopkinton, Mass. Although only one network storage device 100 is shown in FIG. 3, it will be understood that multiple network storage devices of various capacities could be used depending on the data storage needs of central monitoring unit 30. Central monitoring unit 30 also includes database server 110 which is coupled to network storage device 100. Database server 110 is made up of two main components: a large scale multiprocessor server and an enterprise type software server component such as the 8/8i component sold by Oracle Corporation of Redwood City, Calif., or the 506 7 component sold by Microsoft Corporation of Redmond, Wash. The primary functions of database server 110 are that of providing access upon request to the data stored in network storage device 100, and populating network storage device 100 with new data. Coupled to network storage device 100 is controller 115, which typically comprises a desktop personal computer, for managing the data stored in network storage device 100.

Middleware servers 95*a* through 95*c*, a suitable example of which is the 22OR Dual Processor sold by Sun Microsystems, Inc. of Palo Alto, Calif., each contain software for generating and maintaining the corporate or home web page or pages of the web site maintained by central monitoring unit 30. As is known in the art, a web page refers to a block or blocks of data available on the World-Wide Web comprising a file or files written in Hypertext Markup Language or HTML, and a web site commonly refers to any computer on the Internet running a World-Wide Web server process. The corporate or home web page or pages are the opening or landing web page or pages that are accessible by all members of the general public that visit the site by using the appropriate uniform resource locator or URL. As is known in the art, URLs are the form of address used on the World-Wide Web and provide a standard way of specifying the location of an object, typically a web page, on the Internet. Middleware servers 95*a* through 95*c* also each contain software for generating and maintaining the web pages of the web site of central monitoring unit 30 that can only be accessed by individuals that register and become members of central monitoring unit 30. The member users will be those individuals who wish to have their data stored at central monitoring unit 30. Access by such member users is controlled using passwords for security purposes. Preferred embodiments of those web pages are described in detail below and are generated using collected data that is stored in the database of network storage device 100.

Middleware servers 95*a* through 95*c* also contain software for requesting data from and writing data to network storage device 100 through database server 110. When an individual user desires to initiate a session with the central monitoring unit 30 for the purpose of entering data into the database of network storage device 100, viewing his or her data stored in the database of network storage device 100, or both, the user visits the home web page of central monitoring unit 30 using a browser program such as Internet Explorer distributed by Microsoft Corporation of Redmond, Wash., and logs in as a registered user. Load balancer 90 assigns the user to one of the middleware servers 95*a* through 95*c*, identified as the chosen middleware server. A user will preferably be assigned to a chosen middleware server for each entire session. The chosen middleware server authenticates the user using any one of many well known methods, to ensure that only the true user is permitted to access the information in the database. A member user may also grant access to his or her data to a third party such as a health care provider or a personal trainer. Each authorized third party may be given a separate password and may view the member user's data using a conventional browser. It is therefore possible for both the user and the third party to be the recipient of the data.

When the user is authenticated, the chosen middleware server requests, through database server 110, the individual user's data from network storage device 100 for a predetermined time period. The predetermined time period is preferably thirty days. The requested data, once received from network storage device 100, is temporarily stored by the chosen middleware server in cache memory. The cached data is used by the chosen middleware server as the basis for presenting information, in the form of web pages, to the user again through the user's browser. Each middleware server 95*a* through 95*c* is provided with appropriate software for generating such web pages, including software for manipulating and performing calculations utilizing the data to put the data in appropriate format for presentation to the user. Once the user ends his or her session, the data is discarded from cache. When the user initiates a new session, the process for obtaining and caching data for that user as described above is repeated. This caching system thus ideally requires that only one call to the network storage device 100 be made per session, thereby reducing the traffic that database server 110 must handle. Should a request from a user during a particular session require data that is outside of a predetermined time period of cached data already retrieved, a separate call to network storage device 100 may be performed by the chosen middleware server. The predetermined time period should be chosen, however, such that such additional calls are minimized. Cached data may also be saved in cache memory so

that it can be reused when a user starts a new session, thus eliminating the need to initiate a new call to network storage device **100**.

As described in connection with Table 2, the microprocessor of sensor device **10** may be programmed to derive information relating to an individual's physiological state based on the data indicative of one or more physiological parameters. Central monitoring unit **30**, and preferably middleware servers **95***a* through **95***c*, may also be similarly programmed to derive such information based on the data indicative of one or more physiological parameters.

It is also contemplated that a user will input additional data during a session, for example, information relating to the user's eating or sleeping habits. This additional data is preferably stored by the chosen middleware server in a cache during the duration of the user's session. When the user ends the session, this additional new data stored in a cache is transferred by the chosen middleware server to database server **110** for population in network storage device **100**. Alternatively, in addition to being stored in a cache for potential use during a session, the input data may also be immediately transferred to database server **110** for population in network storage device **100**, as part of a write-through cache system which is well known in the art.

Data collected by sensor device **10** shown in FIG. **1** is periodically uploaded to central monitoring unit **30**. Either by long distance wireless transmission or through personal computer **35**, a connection to central monitoring unit **30** is made through an electronic network, preferably the Internet. In particular, connection is made to load balancer **90** through CSU/DSU **70**, router **75**, firewall **80** and switch **85**. Load balancer **90** then chooses one of the middleware servers **95***a* through **95***c* to handle the upload of data, hereafter called the chosen middleware server. The chosen middleware server authenticates the user using any one of many well known methods. If authentication is successful, the data is uploaded to the chosen middleware server as described above, and is ultimately transferred to database server **110** for population in the network storage device **100**.

Referring to FIG. **4**, an alternate embodiment of central monitoring unit **30** is shown. In addition to the elements shown and described with respect to FIG. **3**, the embodiment of the central monitoring unit **30** shown in FIG. **4** includes a mirror network storage device **120** which is a redundant backup of network storage device **100**. Coupled to mirror network storage device **120** is controller **122**. Data from network storage device **100** is periodically copied to mirror network storage device **120** for data redundancy purposes.

Third parties such as insurance companies or research institutions may be given access, possibly for a fee, to certain of the information stored in mirror network storage device **120**. Preferably, in order to maintain the confidentiality of the individual users who supply data to central monitoring unit **30**, these third parties are not given access to such user's individual database records, but rather are only given access to the data stored in mirror network storage device **120** in aggregate form. Such third parties may be able to access the information stored in mirror network storage device **120** through the Internet using a conventional browser program. Requests from third parties may come in through CSU/DSU **70**, router **75**, firewall **80** and switch **85**. In the embodiment shown in FIG. **4**, a separate load balancer **130** is provided for spreading tasks relating to the accessing and presentation of data from mirror drive array **120** among identically configured middleware servers **135***a* through **135***c*. Middleware servers **135***a* through **135***c* each contain software for enabling the third parties to, using a browser, formulate queries for information from mirror network storage device **120** through separate database server **125**. Middleware servers **135***a* through **135***c* also contain software for presenting the information obtained from mirror network storage device **120** to the third parties over the Internet in the form of web pages. In addition, the third parties can choose from a series of prepared reports that have information packaged along subject matter lines, such as various demographic categories.

As will be apparent to one of skill in the art, instead of giving these third parties access to the backup data stored in mirror network storage device **120**, the third parties may be given access to the data stored in network storage device **100**. Also, instead of providing load balancer **130** and middleware servers **135***a* through **135***c*, the same functionality, although at a sacrificed level of performance, could be provided by load balancer **90** and middleware servers **95***a* through **95***c*.

When an individual user first becomes a registered user or member, that user completes a detailed survey. The purposes of the survey are to: identify unique characteristics/circumstances for each user that they might need to address in order to maximize the likelihood that they will implement and maintain a healthy lifestyle as suggested by central monitoring unit **30**; gather baseline data which will be used to set initial goals for the individual user and facilitate the calculation and display of certain graphical data output such as the Health Index pistons; identify unique user characteristics and circumstances that will help central monitoring unit **30** customize the type of content provided to the user in the Health Manager's Daily Dose; and identify unique user characteristics and circumstances that the Health Manager can guide the user to address as possible barriers to a healthy lifestyle through the problem-solving function of the Health Manager.

The specific information to be surveyed may include: key individual temperamental characteristics, including activity level, regularity of eating, sleeping, and bowel habits, initial response to situations, adaptability, persistence, threshold of responsiveness, intensity of reaction, and quality of mood; the user's level of independent functioning, i.e., self-organization and management, socialization, memory, and academic achievement skills; the user's ability to focus and sustain attention, including the user's level of arousal, cognitive tempo, ability to filter distractions, vigilance, and self-monitoring; the user, s current health status including current weight, height, and blood pressure, most recent general physician visit, gynecological exam, and other applicable physician/healthcare contacts, current medications and supplements, allergies, and a review of current symptoms and/or health-related behaviors; the user's past health history, i.e., illnesses/surgeries, family history, and social stress events, such as divorce or loss of a job, that have required adjustment by the individual; the user's beliefs, values and opinions about health priorities, their ability to alter their behavior and, what might contribute to stress in their life, and how they manage it; the user's degree of self-awareness, empathy, empowerment, and self-esteem, and the user's current daily routines for eating, sleeping, exercise, relaxation and completing activities of daily living; and the user's perception of the temperamental characteristics of two key persons in their life, for example, their spouse, a friend, a co-worker, or their boss, and whether there are clashes present in their relationships that might interfere with a healthy lifestyle or contribute to stress.

Each member user will have access, through the home web page of central monitoring unit **30**, to a series of web pages customized for that user, referred to as the Health Manager. The opening Health Manager web page **150** is shown in FIG. **5**. The Health Manager web pages are the main workspace

area for the member user. The Health Manager web pages comprise a utility through which central monitoring unit **30** provides various types and forms of data, commonly referred to as analytical status data, to the user that is generated from the data it collects or generates, namely one or more of the data indicative of various physiological parameters generated by sensor device **10**; the data derived from the data indicative of various physiological parameters; the data indicative of various contextual parameters generated by sensor device **10**; and the data input by the user. Analytical status data is characterized by the application of certain utilities or algorithms to convert one or more of the data indicative of various physiological parameters generated by sensor device **10**, the data derived from the data indicative of various physiological parameters, the data indicative of various contextual parameters generated by sensor device **10**, and the data input by the user into calculated health, wellness and lifestyle indicators. For example, based on data input by the user relating to the foods he or she has eaten, things such as calories and amounts of proteins, fats, carbohydrates, and certain vitamins can be calculated. As another example, skin temperature, heart rate, respiration rate, heat flow and/or GSR can be used to provide an indicator to the user of his or her stress level over a desired time period. As still another example, skin temperature, heat flow, beat-to-beat heart variability, heart rate, pulse rate, respiration rate, core temperature, galvanic skin response, EMG, EEG, EOG, blood pressure, oxygen consumption, ambient sound and body movement or motion as detected by a device such as an accelerometer can be used to provide indicators to the user of his or her sleep patterns over a desired time period.

Located on the opening Health Manager web page **150** is Health Index **155**. Health Index **155** is a graphical utility used to measure and provide feedback to member users regarding their performance and the degree to which they have succeeded in reaching a healthy daily routine suggested by central monitoring unit **30**. Health Index **155** thus provides an indication for the member user to track his or her progress. Health Index **155** includes six categories relating to the user's health and lifestyle: Nutrition, Activity Level, Mind Centering, Sleep, Daily Activities and How You Feel. The Nutrition category relates to what, when and how much a person eats and drinks. The Activity Level category relates to how much a person moves around. The Mind Centering category relates to the quality and quantity of time a person spends engaging in some activity that allows the body to achieve a state of profound relaxation while the mind becomes highly alert and focused. The Sleep category relates to the quality and quantity of a person's sleep. The Daily Activities category relates to the daily responsibilities and health risks people encounter. Finally, the How You Feel category relates to the general perception that a person has about how they feel on a particular day. Each category has an associated level indicator or piston that indicates, preferably on a scale ranging from poor to excellent, how the user is performing with respect to that category.

When each member user completes the initial survey described above, a profile is generated that provides the user with a summary of his or her relevant characteristics and life circumstances. A plan and/or set of goals is provided in the form of a suggested healthy daily routine. The suggested healthy daily routine may include any combination of specific suggestions for incorporating proper nutrition, exercise, mind centering, sleep, and selected activities of daily living in the user's life. Prototype schedules may be offered as guides for how these suggested activities can be incorporated into the user's life. The user may periodically retake the survey, and based on the results, the items discussed above will be adjusted accordingly.

The Nutrition category is calculated from both data input by the user and sensed by sensor device **10**. The data input by the user comprises the time and duration of breakfast, lunch, dinner and any snacks, and the foods eaten, the supplements such as vitamins that are taken, and the water and other liquids consumed during a relevant, pre-selected time period. Based upon this data and on stored data relating to known properties of various foods, central monitoring unit **30** calculates well known nutritional food values such as calories and amounts of proteins, fats, carbohydrates, vitamins, etc., consumed.

The Nutrition Health Index piston level is preferably determined with respect to the following suggested healthy daily routine: eat at least three meals; eat a varied diet consisting of 6-11 servings of bread, pasta, cereal, and rice, 2-4 servings fruit, 3-5 servings of vegetables, 2-3 servings of fish, meat, poultry, dry beans, eggs, and nuts, and 2-3 servings of milk, yogurt and cheese; and drink 8 or more 8 ounce glasses of water. This routine may be adjusted based on information about the user, such as sex, age, height and/or weight. Certain nutritional targets may also be set by the user or for the user, relating to daily calories, protein, fiber, fat, carbohydrates, and/or water consumption and percentages of total consumption. Parameters utilized in the calculation of the relevant piston level include the number of meals per day, the number of glasses of water, and the types and amounts of food eaten each day as input by the user.

Nutritional information is presented to the user through nutrition web page **160** as shown in FIG. **6**. The preferred nutritional web page **160** includes nutritional fact charts **165** and **170** which illustrate actual and target nutritional facts, respectively as pie charts, and nutritional intake charts **175** and **180** which show total actual nutritional intake and target nutritional intake, respectively as pie charts. Nutritional fact charts **165** and **170** preferably show a percentage breakdown of items such as carbohydrates, protein and fat, and nutritional intake charts **175** and **180** are preferably broken down to show components such as total and target calories, fat, carbohydrates, protein, and vitamins. Web page **160** also includes meal and water consumption tracking **185** with time entries, hyperlinks **190** which allow the user to directly access nutrition-related news items and articles, suggestions for refining or improving daily routine with respect to nutrition and affiliate advertising elsewhere on the network, and calendar **195** for choosing between views having variable and selectable time periods. The items shown at **190** may be selected and customized based on information learned about the individual in the survey and on their performance as measured by the Health Index.

The Activity Level category of Health Index **155** is designed to help users monitor how and when they move around during the day and utilizes both data input by the user and data sensed by sensor device **10**. The data input by the user may include details regarding the user's daily activities, for example the fact that the user worked at a desk from 8 a.m. to 5 p.m. and then took an aerobics class from 6 p.m. to 7 p.m. Relevant data sensed by sensor device **10** may include heart rate, movement as sensed by a device such as an accelerometer, heat flow, respiration rate, calories burned, GSR and hydration level, which may be derived by sensor device **60** or central monitoring unit **30**. Calories burned may be calculated in a variety of manners, including: the multiplication of the type of exercise input by the user by the duration of exercise input by the user; sensed motion multiplied by time of motion

multiplied by a filter constant; or sensed heat flux multiplied by time multiplied by a filter constant.

The Activity Level Health Index piston level is preferably determined with respect to a suggested healthy daily routine that includes: exercising aerobically for a pre-set time period, preferably 20 minutes, or engaging in a vigorous lifestyle activity for a pre-set time period, preferably one hour, and burning at least a minimum target number of calories, preferably 205 calories, through the aerobic exercise and/or lifestyle activity. The minimum target number of calories may be set according to information about the user, such as sex, age, height and/or weight. Parameters utilized in the calculation of the relevant piston level include the amount of time spent exercising aerobically or engaging in a vigorous lifestyle activity as input by the user and/or sensed by sensor device **10**, and the number of calories burned above pre-calculated energy expenditure parameters.

Information regarding the individual user's movement is presented to the user through activity level web page **200** shown in FIG. **7**, which may include activity graph **205** in the form of a bar graph, for monitoring the individual user's activities in one of three categories: high, medium and low intensity with respect to a pre-selected unit of time. Activity percentage chart **210**, in the form or a pie chart, may also be provided for showing the percentage of a pre-selected time period, such as one day, that the user spent in each category. Activity level web page **200** may also include calorie section **215** for displaying items such as total calories burned, daily target calories burned, total caloric intake, and duration of aerobic activity. Finally, activity level web page **200** may include at least one hyperlink **220** to allow a user to directly access relevant news items and articles, suggestions for refining or improving daily routine with respect to activity level and affiliate advertising elsewhere on the network. Activity level web page **200** may be viewed in a variety of formats, and may include user-selectable graphs and charts such as a bar graph, pie chart, or both, as selectable by Activity level check boxes **225**. Activity level calendar **230** is provided for selecting among views having variable and selectable time periods. The items shown at **220** may be selected and customized based on information learned about the individual in the survey and on their performance as measured by the Health Index.

The Mind Centering category of Health Index **155** is designed to help users monitor the parameters relating to time spent engaging in certain activities which allow the body to achieve a state of profound relaxation while the mind becomes focused, and is based upon both data input by the user and data sensed by the sensor device **10**. In particular, a user may input the beginning and end times of relaxation activities such as yoga or meditation. The quality of those activities as determined by the depth of a mind centering event can be measured by monitoring parameters including skin temperature, heart rate, respiration rate, and heat flow as sensed by sensor device **10**. Percent change in GSR as derived either by sensor device **10** or central monitoring unit **30** may also be utilized.

The Mind Centering Health Index piston level is preferably calculated with respect to a suggested healthy daily routine that includes participating each day in an activity that allows the body to achieve profound relaxation while the mind stays highly focused for at least fifteen minutes. Parameters utilized in the calculation of the relevant piston level include the amount of time spent in a mind centering activity, and the percent change in skin temperature, heart rate, respiration rate, heat flow or GSR as sensed by sensor device **10** compared to a baseline which is an indication of the depth or quality of the mind centering activity.

Information regarding the time spent on self-reflection and relaxation is presented to the user through mind centering web page **250** shown in FIG. **8**. For each mind centering activity, referred to as a session, the preferred mind centering web page **250** includes the time spent during the session, shown at **255**, the target time, shown at **260**, comparison section **265** showing target and actual depth of mind centering, or focus, and a histogram **270** that shows the overall level of stress derived from such things as skin temperature, heart rate, respiration rate, heat flow and/or GSR. In comparison section **265**, the human figure outline showing target focus is solid, and the human figure outline showing actual focus ranges from fuzzy to solid depending on the level of focus. The preferred mind centering web page may also include an indication of the total time spent on mind centering activities, shown at **275**, hyperlinks **280** which allow the user to directly access relevant news items and articles, suggestions for refining or improving daily routine with respect to mind centering and affiliate advertising, and a calendar **285** for choosing among views having variable and selectable time periods. The items shown at **280** may be selected and customized based on information learned about the individual in the survey and on their performance as measured by the Health Index.

The Sleep category of Health Index **155** is designed to help users monitor their sleep patterns and the quality of their sleep. It is intended to help users learn about the importance of sleep in their healthy lifestyle and the relationship of sleep to circadian rhythms, being the normal daily variations in body functions. The Sleep category is based upon both data input by the user and data sensed by sensor device **10**. The data input by the user for each relevant time interval includes the times the user went to sleep and woke up and a rating of the quality of sleep. As noted in Table 2, the data from sensor device **10** that is relevant includes skin temperature, heat flow, beat-to-beat heart variability, heart rate, pulse rate, respiration rate, core temperature, galvanic skin response, EMG, EEG, EOG, blood pressure, and oxygen consumption. Also relevant is ambient sound and body movement or motion as detected by a device such as an accelerometer. This data can then be used to calculate or derive sleep onset and wake time, sleep interruptions, and the quality and depth of sleep.

The Sleep Health Index piston level is determined with respect to a healthy daily routine including getting a minimum amount, preferably eight hours, of sleep each night and having a predictable bed time and wake time. The specific parameters which determine the piston level calculation include the number of hours of sleep per night and the bed time and wake time as sensed by sensor device **10** or as input by the user, and the quality of the sleep as rated by the user or derived from other data.

Information regarding sleep is presented to the user through sleep web page **290** shown in FIG. **9**. Sleep web page **290** includes a sleep duration indicator **295**, based on either data from sensor device **10** or on data input by the user, together with user sleep time indicator **300** and wake time indicator **305**. A quality of sleep rating **310** input by the usermay also be utilized and displayed. If more than a one day time interval is being displayed on sleep web page **290**, then sleep duration indicator **295** is calculated and displayed as a cumulative value, and sleep time indicator **300**, wake time indicator **305** and quality of sleep rating **310** are calculated and illustrated as averages. Sleep web page **290** also includes a user-selectable sleep graph **315** which calculates and displays one sleep related parameter over a pre-selected time

interval. For illustrative purposes, FIG. **9** shows heat flow over a one-day period, which tends to be lower during sleeping hours and higher during waking hours. From this information, a person's bio-rhythms can be derived. Sleep graph **315** may also include a graphical representation of data from an accelerometer incorporated in sensor device **10** which monitors the movement of the body. The sleep web page **290** may also include hyperlinks **320** which allow the user to directly access sleep related news items and articles, suggestions for refining or improving daily routine with respect to sleep and affiliate advertising available elsewhere on the network, and a sleep calendar **325** for choosing a relevant time interval. The items shown at **320** may be selected and customized based on information learned about the individual in the survey and on their performance as measured by the Health Index.

The Activities of Daily Living category of Health Index **155** is designed to help users monitor certain health and safety related activities and risks and is based entirely on data input by the user. The Activities of Daily Living category is divided into four sub-categories: personal hygiene, which allows the user to monitor activities such as brushing and flossing his or her teeth and showering; health maintenance, that tracks whether the user is taking prescribed medication or supplements and allows the user to monitor tobacco and alcohol consumption and automobile safety such as seat belt use; personal time, that allows the user to monitor time spent socially with family and friends, leisure, and mind centering activities; and responsibilities, that allows the user to monitor certain work and financial activities such as paying bills and household chores.

The Activities of Daily Living Health Index piston level is preferably determined with respect to the healthy daily routine described below. With respect to personal hygiene, the routine requires that the users shower or bathe each day, brush and floss teeth each day, and maintain regular bowel habits. With respect to health maintenance, the routine requires that the user take medications and vitamins and/or supplements, use a seat belt, refrain from smoking, drink moderately, and monitor health each day with the Health Manager. With respect to personal time, the routine requires the users to spend at least one hour of quality time each day with family and/or friends, restrict work time to a maximum of nine hours a day, spend some time on a leisure or play activity each day, and engage in a mind stimulating activity. With respect to responsibilities, the routine requires the users to do household chores, pay bills, be on time for work, and keep appointments. The piston level is calculated based on the degree to which the user completes a list of daily activities as determined by information input by the user.

Information relating to these activities is presented to the user through daily activities web page **330** shown in FIG. **10**. In preferred daily activities web page **330**, activities chart **335**, selectable for one or more of the sub-categories, shows whether the user has done what is required by the daily routine. A colored or shaded box indicates that the user has done the required activity, and an empty, non-colored or shaded box indicates that the user has not done the activity. Activities chart **335** can be created and viewed in selectable time intervals. For illustrative purposes, FIG. **10** shows the personal hygiene and personal time sub-categories for a particular week. In addition, daily activities web page **330** may include daily activity hyperlinks **340** which allow the user to directly access relevant news items and articles, suggestions for improving or refining daily routine with respect to activities of daily living and affiliate advertising, and a daily activities calendar **345** for selecting a relevant time interval. The items shown at **340** may be selected and customized based on information learned about the individual in the survey and on their performance as measured by the Health Index.

The How You Feel category of Health Index **155** is designed to allow users to monitor their perception of how they felt on a particular day, and is based on information, essentially a subjective rating, that is input directly by the user. A user provides a rating, preferably on a scale of 1 to 5, with respect to the following nine subject areas: mental sharpness; emotional and psychological well being; energy level; ability to cope with life stresses; appearance; physical well being; self-control; motivation; and comfort in relating to others. Those ratings are averaged and used to calculate the relevant piston level.

Referring to FIG. **11**, Health Index web page **350** is shown. Health Index web page **350** enables users to view the performance of their Health Index over a user selectable time interval including any number of consecutive or non-consecutive days. Using Health Index selector buttons **360**, the user can select to view the Health index piston levels for one category, or can view a side-by-side comparison of the Health Index piston levels for two or more categories. For example, a user might want to just turn on Sleep to see if their overall sleep rating improved over the previous month, much in the same way they view the performance of their favorite stock. Alternatively, Sleep and Activity Level might be simultaneously displayed in order to compare and evaluate Sleep ratings with corresponding Activity Level ratings to determine if any day-to-day correlations exist. Nutrition ratings might be displayed with How You Feel for a pre-selected time interval to determine if any correlation exists between daily eating habits and how they felt during that interval. For illustrative purposes, FIG. **11** illustrates a comparison of Sleep and Activity Level piston levels for the week of June 10 through June 16. Health Index web page **350** also includes tracking calculator **365** that displays access information and statistics such as the total number of days the user has logged in and used the Health Manager, the percentage of days the user has used the Health Manager since becoming a subscriber, and percentage of time the user has used the sensor device **10** to gather data.

Referring again to FIG. **5**, opening Health Manager web page **150** may include a plurality of user selectable category summaries **156***a* through **156***f*, one corresponding to each of the Health Index **155** categories. Each category summary **156***a* through **156***f* presents a pre-selected filtered subset of the data associated with the corresponding category. Nutrition category summary **156***a* displays daily target and actual caloric intake. Activity Level category summary **156***b* displays daily target and actual calories burned. Mind Centering category summary **156***c* displays target and actual depth of mind centering or focus. Sleep category summary **156***d* displays target sleep, actual sleep, and a sleep quality rating. Daily Activities category summary **156***e* displays a target and actual score based on the percentage of suggested daily activities that are completed. The How You Feel category summary **156***f* shows a target and actual rating for the day.

Opening Health Manager web page **150** also may include Daily Dose section **157** which provides, on a daily time interval basis, information to the user, including, but not limited to, hyperlinks to news items and articles, commentary and reminders to the user based on tendencies, such as poor nutritional habits, determined from the initial survey. The commentary for Daily Dose **157** may, for example, be a factual statement that drinking 8 glasses of water a day can reduce the risk of colon cancer by as much as 32%, accompanied by a suggestion to keep a cup of water by your computer or on your desk at work and refill often. Opening Health Manager web

page **150** also may include a Problem Solver section **158** that actively evaluates the user's performance in each of the categories of Health Index **155** and presents suggestions for improvement. For example, if the system detects that a user's Sleep levels have been low, which suggest that the user has been having trouble sleeping, Problem Solver **158** can provide suggestions for way to improve sleep. Problem Solver **158** also may include the capability of user questions regarding improvements in performance. Opening Health Manager web page **150** may also include a Daily Data section **159** that launches an input dialog box. The input dialog box facilitates input by the user of the various data required by the Health Manager. As is known in the art, data entry may be in the form of selection from pre-defined lists or general free form text input. Finally, opening Health Manager web page **150** may include Body Stats section **161** which may provide information regarding the user's height, weight, body measurements, body mass index or BMI, and vital signs such as heart rate, blood pressure or any of the identified physiological parameters.

Referring to FIGS. **12-17**, a specific embodiment of sensor device **10** is shown which is in the form of an armband adapted to be worn by an individual on his or her upper arm, between the shoulder and the elbow. The specific embodiment of sensor device **10** shown in FIGS. **12-17** will, for convenience, be referred to as armband sensor device **400**. Armband sensor device **400** includes computer housing **405**, flexible wing body **410**, and, as shown in FIG. **17**, elastic strap **415**. Computer housing **405** and flexible wing body **410** are preferably made of a flexible urethane material or an elastomeric material such as rubber or a rubber-silicone blend by a molding process. Flexible wing body **410** includes first and second wings **418** each having a thru-hole **420** located near the ends **425** thereof. First and second wings **418** are adapted to wrap around a portion of the wearer's upper arm.

Elastic strap **415** is used to removably affix armband sensor device **400** to the individual's upper arm. As seen in FIG. **17**, bottom surface **426** of elastic strap **415** is provided with Velcro loops **416** along a portion thereof. Each end **427** of elastic strap **415** is provided with Velcro hook patch **428** on bottom surface **426** and pull tab **429** on top surface **430**. A portion of each pull tab **429** extends beyond the edge of each end **427**.

In order to wear armband sensor device **400**, a user inserts each end **427** of elastic strap **415** into a respective thru-hole **420** of flexible wing body **410**. The user then places his arm through the loop created by elastic strap **415**, flexible wing body **410** and computer housing **405**. By pulling each pull tab **429** and engaging Velcro hook patches **428** with Velcro loops **416** at a desired position along bottom surface **426** of elastic strap **415**, the user can adjust elastic strap **415** to fit comfortably. Since Velcro hook patches **428** can be engaged with Velcro loops **416** at almost any position along bottom surface **426**, armband sensor device **400** can be adjusted to fit arms of various sizes. Also, elastic strap **415** may be provided in various lengths to accommodate a wider range of arm sizes. As will be apparent to one of skill in the art, other means of fastening and adjusting the size of elastic strap may be used, including, but not limited to, snaps, buttons, or buckles. It is also possible to use two elastic straps that fasten by one of several conventional means including Velcro, snaps, buttons, buckles or the like, or merely a single elastic strap affixed to wings **418**.

Alternatively, instead of providing thru-holes **420** in wings **418**, loops having the shape of the letter D, not shown, may be attached to ends **425** of wings **418** by one of several conventional means. For example, a pin, not shown, may be inserted through ends **425**, wherein the pin engages each end of each loop. In this configuration, the D-shaped loops would serve as connecting points for elastic strap **415**, effectively creating a thru-hole between each end **425** of each wing **418** and each loop.

As shown in FIG. **18**, which is an exploded view of armband sensor device **400**, computer housing **405** includes a top portion **435** and a bottom portion **440**. Contained within computer housing **405** are printed circuit board or PCB **445**, rechargeable battery **450**, preferably a lithium ion battery, and vibrating motor **455** for providing tactile feedback to the wearer, such as those used in pagers, suitable examples of which are the Model 12342 and 12343 motors sold by MG Motors Ltd. of the United Kingdom.

Top portion **435** and bottom portion **440** of computer housing **405** sealingly mate along groove **436** into which O-ring **437** is fit, and may be affixed to one another by screws, not shown, which pass through screw holes **438*a*** and stiffeners **438*b*** of bottom portion **440** and apertures **439** in PCB **445** and into threaded receiving stiffeners **451** of top portion **435**. Alternately, top portion **435** and bottom portion **440** may be snap fit together or affixed to one another with an adhesive. Preferably, the assembled computer housing **405** is sufficiently water resistant to permit armband sensor device **400** to be worn while swimming without adversely affecting the performance thereof

As can be seen in FIG. **13**, bottom portion **440** includes, on a bottom side thereof, a raised platform **430**. Affixed to raised platform **430** is heat flow or flux sensor **460**, a suitable example of which is the micro-foil heat flux sensor sold by RdF Corporation of Hudson, N.H. Heat flux sensor **460** functions as a self-generating thermopile transducer, and preferably includes a carrier made of a polyamide film. Bottom portion **440** may include on a top side thereof, that is on a side opposite the side to which heat flux sensor **460** is affixed, a heat sink, not shown, made of a suitable metallic material such as aluminum. Also affixed to raised platform **430** are GSR sensors **465**, preferably comprising electrodes formed of a material such as conductive carbonized rubber, gold or stainless steel. Although two GSR sensors **465** are shown in FIG. **13**, it will be appreciated by one of skill in the art that the number of GSR sensors **465** and the placement thereof on raised platform **430** can vary as long as the individual GSR sensors **465**, i.e., the electrodes, are electrically isolated from one another. By being affixed to raised platform **430**, heat flux sensor **460** and GSR sensors **465** are adapted to be in contact with the wearer's skin when armband sensor device **400** is worn. Bottom portion **440** of computer housing **405** may also be provided with a removable and replaceable soft foam fabric pad, not shown, on a portion of the surface thereof that does not include raised platform **430** and screw holes **438*a***. The soft foam fabric is intended to contact the wearer's skin and make armband sensor device **400** more comfortable to wear.

Electrical coupling between heat flux sensor **460**, GSR sensors **465**, and PCB **445** may be accomplished in one of various known methods. For example, suitable wiring, not shown, may be molded into bottom portion **440** of computer housing **405** and then electrically connected, such as by soldering, to appropriate input locations on PCB **445** and to heat flux sensor **460** and GSR sensors **465**. Alternatively, rather than molding wiring into bottom portion **440**, thru-holes may be provided in bottom portion **440** through which appropriate wiring may pass. The thru-holes would preferably be provided with a water tight seal to maintain the integrity of computer housing **405**.

Rather than being affixed to raised platform **430** as shown in FIG. **13**, one or both of heat flux sensor **460** and GSR sensors **465** may be affixed to the inner portion **466** of flexible wing body **410** on either or both of wings **418** so as to be in contact with the wearer's skin when armband sensor device **400** is worn. In such a configuration, electrical coupling between heat flux sensor **460** and GSR sensors **465**, whichever the case may be, and the PCB **445** may be accomplished through suitable wiring, not shown, molded into flexible wing body **410** that passes through one or more thru-holes in computer housing **405** and that is electrically connected, such as by soldering, to appropriate input locations on PCB **445**. Again, the thru-holes would preferably be provided with a water tight seal to maintain the integrity of computer housing **405**. Alternatively, rather than providing thru-holes in computer housing **405** through which the wiring passes, the wiring may be captured in computer housing **405** during an overmolding process, described below, and ultimately soldered to appropriate input locations on PCB **445**.

As shown in FIGS. **12**, **16**, **17** and **18**, computer housing **405** includes a button **470** that is coupled to and adapted to activate a momentary switch **585** on PCB **445**. Button **470** maybe used to activate armband sensor device **400** for use, to mark the time an event occurred or to request system status information such as battery level and memory capacity. When button **470** is depressed, momentary switch **585** closes a circuit and a signal is sent to processing unit **490** on PCB **445**. Depending on the time interval for which button **470** is depressed, the generated signal triggers one of the events just described. Computer housing **405** also includes LEDs **475**, which may be used to indicate battery level or memory capacity or to provide visual feedback to the wearer. Rather than LEDs **475**, computer housing **405** may also include a liquid crystal display or LCD to provide battery level, memory capacity or visual feedback information to the wearer. Battery level, memory capacity or feedback information may also be given to the user tactily or audibly.

Armband sensor device **400** may be adapted to be activated for use, that is collecting data, when either of GSR sensors **465** or heat flux sensor **460** senses a particular condition that indicates that armband sensor device **400** has been placed in contact with the user's skin. Also, armband sensor device **400** may be adapted to be activated for use when one or more of heat flux sensor **460**, GSR sensors **465**, accelerometer **495** or **550**, or any other device in communication with armband sensor device **400**, alone or in combination, sense a particular condition or conditions that indicate that the armband sensor device **400** has been placed in contact with the user's skin for use. At other times, armband sensor device **400** would be deactivated, thus preserving battery power.

Computer housing **405** is adapted to be coupled to a battery recharger unit **480** shown in FIG. **19** for the purpose of recharging rechargeable battery **450**. Computer housing **405** includes recharger contacts **485**, shown in FIGS. **12**, **15**, **16** and **17**, that are coupled to rechargeable battery **450**. Recharger contacts **485** may be made of a material such as brass, gold or stainless steel, and are adapted to mate with and be electrically coupled to electrical contacts, not shown, provided in battery recharger unit **480** when armband sensor device **400** is placed therein. The electrical contacts provided in battery recharger unit **480** may be coupled to recharging circuit **481***a* provided inside battery recharger unit **480**. In this configuration, recharging circuit **481** would be coupled to a wall outlet, such as by way of wiring including a suitable plug that is attached or is attachable to battery recharger unit **480**. Alternatively, electrical contacts **480** may be coupled to wiring that is attached to or is attachable to battery recharger unit **480** that in turn is coupled to recharging circuit **481***b* external to battery recharger unit **480**. The wiring in this configuration would also include a plug, not shown, adapted to be plugged into a conventional wall outlet.

Also provided inside battery recharger unit **480** is RF transceiver **483** adapted to receive signals from and transmit signals to RF transceiver **565** provided in computer housing **405** and shown in FIG. **20**. RF transceiver **483** is adapted to be coupled, for example by a suitable cable, to a serial port, such as an RS 232 port or a USB port, of a device such as personal computer **35** shown in FIG. **1**. Thus, data may be uploaded from and downloaded to armband sensor device **400** using RF transceiver **483** and RF transceiver **565**. It will be appreciated that although RF transceivers **483** and **565** are shown in FIGS. **19** and **20**, other forms of wireless transceivers may be used, such as infrared transceivers. Alternatively, computer housing **405** may be provided with additional electrical contacts, not shown, that would be adapted to mate with and be electrically coupled to additional electrical contacts, not shown, provided in battery recharger unit **480** when armband sensor device **400** is placed therein. The additional electrical contacts in the computer housing **405** would be coupled to the processing unit **490** and the additional electrical contacts provided in battery recharger unit **480** would be coupled to a suitable cable that in turn would be coupled to a serial port, such as an RS R32 port or a USB port, of a device such as personal computer **35**. This configuration thus provides an alternate method for uploading of data from and downloading of data to armband sensor device **400** using a physical connection.

FIG. **20** is a schematic diagram that shows the system architecture of armband sensor device **400**, and in particular each of the components that is either on or coupled to PCB **445**.

As shown in FIG. **17**, PCB **445** includes processing unit **490**, which may be a microprocessor, a microcontroller, or any other processing device that can be adapted to perform the functionality described herein. Processing unit **490** is adapted to provide all of the functionality described in connection with microprocessor **20** shown in FIG. **2**. A suitable example of processing unit **490** is the Dragonball EZ sold by Motorola, Inc. of Schaumburg, Ill. PCB **445** also has thereon a two-axis accelerometer **495**, a suitable example of which is the Model ADXL210 accelerometer sold by Analog Devices, Inc. of Norwood, Mass. Two-axis accelerometer **495** is preferably mounted on PCB **445** at an angle such that its sensing axes are offset at an angle substantially equal to 45 degrees from the longitudinal axis of PCB **445** and thus the longitudinal axis of the wearer's arm when armband sensor device **400** is worn. The longitudinal axis of the wearer's arm refers to the axis defined by a straight line drawn from the wearer's shoulder to the wearer's elbow. The output signals of two-axis accelerometer **495** are passed through buffers **500** and input into analog to digital converter **505** that in turn is coupled to processing unit **490**. GSR sensors **465** are coupled to amplifier **510** on PCB **445**. Amplifier **510** provides amplification and low pass filtering functionality, a suitable example of which is the Model AD8544 amplifier sold by Analog Devices, Inc. of Norwood, Mass. The amplified and filtered signal output by amplifier **510** is input into amp/offset **515** to provide further gain and to remove any bias voltage and into filter/conditioning circuit **520**, which in turn are each coupled to analog to digital converter **505**. Heat flux sensor **460** is coupled to differential input amplifier **525**, such as the Model INA amplifier sold by Burr-Brown Corporation of Tucson, Ariz., and the resulting amplified signal is passed through filter circuit **530**, buffer **535** and amplifier **540** before being

input to analog to digital converter **505**. Amplifier **540** is configured to provide further gain and low pass filtering, a suitable example of which is the Model AD8544 amplifier sold by Analog Devices, Inc. of Norwood, Mass. PCB **445** also includes thereon a battery monitor **545** that monitors the remaining power level of rechargeable battery **450**. Battery monitor **545** preferably comprises a voltage divider with a low pass filter to provide average battery voltage. When a user depresses button **470** in the manner adapted for requesting battery level, processing unit **490** checks the output of battery monitor **545** and provides an indication thereof to the user, preferably through LEDs **475**, but also possibly through vibrating motor **455** or ringer **575**. An LCD may also be used.

PCB **445** may include three-axis accelerometer **550** instead of or in addition to two-axis accelerometer **495**. The three-axis accelerometer outputs a signal to processing unit **490**. A suitable example of three-axis accelerometer is the μPAM product sold by I.M. Systems, Inc. of Scottsdale, Ariz. Three-axis accelerometer **550** is preferably tilted in the manner described with respect to two-axis accelerometer **495**.

PCB **445** also includes RF receiver **555** that is coupled to processing unit **490**. RF receiver **555** may be used to receive signals that are output by another device capable of wireless transmission, shown in FIG. **20** as wireless device **558**, worn by or located near the individual wearing armband sensor device **400**. Located near as used herein means within the transmission range of wireless device **558**. For example, wireless device **558** may be a chest mounted heart rate monitor such as the Tempo product sold by Polar Electro of Oulu, Finland. Using such a heart rate monitor, data indicative of the wearer's heart rate can be collected by armband sensor device **400**. Antenna **560** and RF transceiver **565** are coupled to processing unit **490** and are provided for purposes of uploading data to central monitoring unit **30** and receiving data downloaded from central monitoring unit **30**. RF transceiver **565** and RF receiver **555** may, for example, employ Bluetooth technology as the wireless transmission protocol. Also, other forms of wireless transmission may be used, such as infrared transmission.

The fact that RF Transceiver **565** may be used for wirelessly uploading data from and wirelessly downloading data to armband sensor device **400** is advantageous because it eliminates the need to remove armband sensor device **400** to perform these functions, as would be required with a physical connection. For example, if armband sensor device **400** was being worn under the user's clothing, requiring removal of armband sensor device **400** prior to uploading and/or downloading data increases user inconvenience. In addition, the wearing of armband sensor device **400** has an effect on the user's skin and underlying blood vessels, which in turn may effect any measurements being made with respect thereto. It may be necessary for a period of time during which armband sensor device **400** is worn by the user to elapse before a steady state is achieved and consistent, accurate measurements can be made. By providing armband sensor device **400** with wireless communications capability, data can be uploaded and downloaded without disturbing an established steady state equilibrium condition. For example, programming data for processing unit **490** that controls the sampling characteristics of armband sensor device **400** can be downloaded to armband sensor device **400** without disturbing the steady state equilibrium condition.

In addition, antenna **560** and RF transceiver **565** permit armband sensor device **400** to communicate wirelessly with other devices capable of wireless communication, i.e., transmit information to and receive information from those devices. The devices may include, for example, devices that are implanted in the body of the person using armband sensor device **400**, such as an implantable heart pacemaker or an implantable insulin dispensing device, for example the MiniMed® 2007 implantable insulin pump sold by MiniMed Inc. of Northridge, Calif., devices worn on the body of the person using armband sensor device **400**, or devices located near the person using armband sensor device **400** at any particular time, such as an electronic scale, a blood pressure monitor, a glucose monitor, a cholesterol monitor or another armband sensor device **400**. With this two-way wireless communication capability, armband sensor device **400** may be adapted to transmit information that activates or deactivates such a device for use or information that programs such a device to behave in a particular way. For example, armband sensor device **400** may be adapted to activate a piece of exercise equipment such as a treadmill and program it to operate with certain parameters that are dictated or desired by or optimal for the user of armband sensor device **400**. As another example, armband sensor device **400** may be adapted to adjust a computer controlled thermostat in a home based on the detected skin temperature of the wearer or turn off a computer controlled lighting system, television or stereo when the wearer is determined to have fallen asleep.

Vibrating motor **455** is coupled to processing unit **490** through vibrator driver **570** and provides tactile feedback to the wearer. Similarly, ringer **575**, a suitable example of which is the Model SMT916A ringer sold by Projects Unlimited, Inc. of Dayton, Ohio, is coupled to processing unit **490** through ringer driver **580**, a suitable example of which is the Model MMBTA14 CTI darlington transistor driver sold by Motorola, Inc. of Schaumburg, Ill., and provides audible feedback to the wearer. Feedback may include, for example, celebratory, cautionary and other threshold or event driven messages, such as when a wearer reaches a level of calories burned during a workout.

Also provided on PCB **445** and coupled to processing unit **490** is momentary switch **585**. Momentary switch **585** is also coupled to button **470** for activating momentary switch **585**. LEDs **475**, used to provide various types of feedback information to the wearer, are coupled to processing unit **490** through LED latch/driver **590**.

Oscillator **595** is provided on PCB **445** and supplies the system clock to processing unit **490**. Reset circuit **600**, accessible and triggerable through a pin-hole in the side of computer housing **405**, is coupled to processing unit **490** and enables processing unit **490** to be reset to a standard initial setting.

Rechargeable battery **450**, which is the main power source for the armband sensor device **400**, is coupled to processing unit **490** through voltage regulator **605**. Finally, memory functionality is provided for armband sensor device **400** by SRAM **610**, which stores data relating to the wearer of armband sensor device **400**, and flash memory **615**, which stores program and configuration data, provided on PCB **445**. SRAM **610** and flash memory **615** are coupled to processing unit **490** and each preferably have at least 512K of memory.

In manufacturing and assembling armband sensor device **400**, top portion **435** of computer housing **405** is preferably formed first, such as by a conventional molding process, and flexible wing body **410** is then overmolded on top of top portion **435**. That is, top portion **435** is placed into an appropriately shaped mold, i.e., one that, when top portion **435** is placed therein, has a remaining cavity shaped according to the desired shape of flexible wing body **410**, and flexible wing body **410** is molded on top of top portion **435**. As a result, flexible wing body **410** and top portion **435** will merge or bond together, forming a single unit. Alternatively, top por-

tion **435** of computer housing **405** and flexible wing body **410** may be formed together, such as by molding in a single mold, to form a single unit. The single unit however formed may then be turned over such that the underside of top portion **435** is facing upwards, and the contents of computer housing **405** can be placed into top portion **435**, and top portion **435** and bottom portion **440** can be affixed to one another. As still another alternative, flexible wing body **410** may be separately formed, such as by a conventional molding process, and computer housing **405**, and in particular top portion **435** of computer housing **405**, may be affixed to flexible wing body **410** by one of several known methods, such as by an adhesive, by snap-fitting, or by screwing the two pieces together. Then, the remainder of computer housing **405** would be assembled as described above. It will be appreciated that rather than assembling the remainder of computer housing **405** after top portion **435** has been affixed to flexible wing body **410**, the computer housing **405** could be assembled first and then affixed to flexible wing body **410**.

Referring to FIG. **21**, a block diagram of an alternate embodiment of the present invention is shown. This alternate embodiment includes stand alone sensor device **700** which functions as an independent device, meaning that it is capable of collecting and/or generating the various types of data described herein in connection with sensor device **10** and sensor device **400** and providing analytical status data to the user without interaction with a remotely located apparatus such as central monitoring unit **30**. Stand alone sensor device **700** includes a processor that is programmed and/or otherwise adapted to include the utilities and algorithms necessary to create analytical status data from the data indicative of various physiological and/or contextual parameters of the user, the data derived therefrom, and the data input by the user, all of which is stored in and accessed as needed from memory provided in stand alone sensor device **700**. Stand alone sensor device **700** may comprise sensor device **10** shown in FIGS. **1** and **2** that includes microprocessor **20** and memory **22** or armband sensor device **400** shown in FIGS. **12-17** that includes processing unit **490** and SRAM **610**.

As shown schematically in FIG. **21**, data may be input into stand alone sensor device **700** in a number of ways. Stand alone sensor device **700** may include one or more physiological sensors **705** as described herein for facilitating the collection of data indicative of various physiological parameters of the user. Stand alone sensor device **700** may also include one or more contextual sensors **710** as described herein for facilitating the collection of data indicative of various contextual parameters of the user. As indicated by reference number **715**, stand alone sensor device **700** may be adapted to enable the manual entry of data by the user. For example, stand alone sensor device **700** may include a data input button, such as a button **470** of armband sensor device **400**, through which a user could manually enter information such as information relating to various life activities of the user as described herein or information relating to the operation and/or control of stand alone sensor device **700**, for example, the setting of reminders or alerts as described herein. In this example, activation of button **470** may simply record or time stamp that an event such as a meal has occurred, with the wearer needing to assign a meaning to that time stamp through data entry at a later time. Alternatively, activation of button **470** in certain sequences, such as one activation, two successive activations, three successive activations, etc., can be preset to have different specific meanings. A wearer would need to follow a menu or guide of such preset activation sequences to input relevant data. Alternatively, stand alone sensor device **700** may include a more sophisticated means for manual entry of information such as a keypad, a touch screen, a microphone, or a remote control device, for example a remote control device incorporated into a wristwatch. In the case of a microphone, the processor of stand alone sensor device **700** would be provided with well known voice recognition software or the like for converting the input speech into usable data.

As indicated by reference numbers **720** and **725**, information comprising data indicative of various physiological and/or contextual parameters and data derived therefrom may be input into stand alone sensor device **700** through interaction with other devices. In addition, information such as handshake data or data indicative of various physiological and/or contextual parameters and data derived therefrom may be output from stand alone sensor device **700** to such other devices. According to one embodiment, the interaction is in the form of wireless communication between stand alone sensor device **700** and another device capable of wireless communication by way of a wireless transceiver provided in stand alone sensor device **700**, such as wireless transceiver **565** shown and described in connection with FIG. **20**. The device-to-device interaction may, as shown by reference number **720**, be explicit, meaning that the user of stand alone sensor device **700** has knowingly initiated the interaction. For example, a user may activate a button on a scale to upload data to stand alone sensor device **700**. The device-to-device interaction may also, as shown by reference number **725**, be hidden, meaning that the user of stand alone sensor device **700** does not knowingly initiate the interaction. For example, a gym may have a sensor that wirelessly transmits a signal to sensing device **700** when the user enters and leaves the gym to time stamp when the user began and ended a workout.

As shown schematically in FIG. **21**, information may be output or transmitted from stand alone sensor device **700** in a number of ways. Such information may include the data indicative of various physiological parameters and/or contextual parameters, the data derived therefrom, the data manually input by the user, the analytical status data, or any combination thereof. As shown by reference numbers **730**, **735** and **740**, information may be output or transmitted in an audible fashion such as by a series of tones or beeps or a recorded voice by a device such as a speaker, in a visual fashion such as by one or more LEDs, or in a tactile fashion such as by vibration. For example, stand alone sensor device **700** may be adapted to output a tone or tones, light an LED or LEDs, or vibrate as a reminder for an event, such as a reminder to eat or exercise at a particular time, or when a goal has been reached, such as a target number of calories burned during a workout, or a condition has been sensed, such as ovulation. Alternatively, stand alone sensor device **700** may be provided with a more sophisticated visual output means such as an LCD similar to those found on commercially available cell phones, pagers and personal digital assistants. With an LCD or a similar device and the expanded visual output capabilities it would provide, stand alone sensor device **700** may be adapted to output or transmit some or all of the information described in connection with FIGS. **5** through **11** in the same or a similar format. For example, stand alone sensor device **700** could provide analytical status data in the form of the Health Index to the user. As a further alternative, stand alone sensor device **700** may be coupled to computing device **750** such as a personal computer, a cell phone, a pager, a personal digital assistant, another stand alone sensor device **700** or any other device having a processor by either wired connection **755** or wireless connection **760**. For example, battery recharger unit **480** shown in FIG. **19** may be used to provide the wired connection **755** or wireless connection **760**. In this configuration, the display of the computing device could be used to

visually output information from stand alone sensor device **700**. It will be appreciated that since computing device **750** includes a sophisticated output means such as an LCD, it may be used to output or transmit to the user some or all of the information described in connection with FIGS. **5** through **11**, such as the Health Index, in the same or a similar format.

Also, computing device **750** may in turn be used to control other devices, such as the lights or thermostat in a home, based on data output by stand alone sensor device **700**, such as the fact that the wearer has fallen asleep or the fact that the wearer's skin temperature has reached a certain level. In other words, stand alone sensor device **700**, and in particular its processor, may be adapted to cause a computing device **750** to trigger an event upon detection of one or more physiological and/or contextual conditions by stand alone sensor device **700**. Alternatively, stand alone sensor device **700** may be adapted to cause a computing device **750** to trigger an event based upon information received from another computing device **750**.

Stand alone sensor device **700** may be adapted to interact with and influence an interactive electronic media device, such as a video game, or non-interactive electronic media device, such as on a display device such as a DVD or digital video disc player playing a digitally recorded movie. For example, stand alone sensor device **700** may be adapted to transmit information relating to the physiological state of the wearer to the video game, which in turn adjusts the characteristics of the game, such as the level of difficulty. As another example, stand alone sensor device **700** may be adapted to transmit information relating to the physiological state of the wearer to the device displaying the digitally recorded movie which in turn adjusts the characteristics, such as the outcome, of the movie.

Furthermore, stand alone sensor device **700** may include location sensing device **765**, such as an ultrasonic or a radio-frequency identification tag, for enabling a computing device **750** to detect the geographic location of stand alone sensor device **700**, such as the location of stand alone sensor device **700** within a defined space such as a building. In one embodiment, a location indication causes computing device **750** to trigger an event, such as lowering the temperature in a room corresponding to the indicated location, preferably based on the detection by stand alone sensor device **700** of one or more physiological conditions of the wearer, such as skin temperature. In another embodiment, the location indication causes computing device **750** to trigger an event, such as lowering the temperature in a room corresponding to the indicated location, if stand alone sensor device **700** detects one or more physiological conditions, such as a skin temperature of the wearer being above a certain level. In addition, the input means of the computing device, such as the mouse and keyboard of a personal computer, the keypad of a cell phone or pager, or the touch screen of a personal digital assistant, may be used to manually input information into stand alone sensor device **700**.

The different modes of output may be used in combination to provide different types and levels of information to a user. For example, stand alone sensor device **700** could be worn by an individual while exercising and an LED or a tone can be used to signal that a goal of a certain number of calories burned has been reached. The user could then transmit additional data wirelessly from stand alone sensor device **700** to a computing device **750** such as a cell phone after he or she is finished exercising to view data such as heart rate and/or respiration rate over time.

As a further alternative embodiment of the present invention, rather than the processor provided in stand alone sensor device **700** being programmed and/or otherwise adapted to generate the derived data and to include the utilities and algorithms necessary to create analytical status data, computing device **750** could be so programmed. In this embodiment, stand alone sensor device **700** collects and/or generates the data indicative of various physiological and/or contextual parameters of the user, the data manually input by the user, and/or data input as a result of device-to-device interaction shown at **720** and **725**, all of which is stored in the memory provided in stand alone sensor device **700**. This data is then periodically uploaded to computing device **750** which in turn generates derived data and/or analytical status data. Alternatively, the processor of stand alone sensor device **700** could be programmed to generate the derived data with computing device **750** being programmed and/or otherwise adapted to include the utilities and algorithms necessary to create analytical status data based on data indicative of one or more physiological and/or contextual parameters, data derived therefrom, data manually input by the user and/or data input as a result of device-to-device interaction shown at **720** and **725** uploaded from stand alone sensor device **700**. As still a further alternative, the processor of stand alone sensor device **700** could be programmed and/or otherwise adapted to include the utilities and algorithms necessary to create analytical status data based on data indicative of one or more physiological and/or contextual parameters, data derived therefrom, data manually input by the user and/or data input as a result of device-to-device interaction shown at **720** and **725** uploaded from stand alone sensor device **700** with computing device **750** being programmed to generate the derived data. In either alternative, any or all of the data indicative of physiological and/or contextual parameters of the user, the data derived therefrom, the data manually input by the user, the data input as a result of device-to-device interaction shown at **720** and **725** and the analytical status data may then be viewed by the user using the output means of the programmed computing device **750** or another computing device **750** to which the data is downloaded. In the latter alternative, everything but the analytical status data may also be output by stand alone sensor device **700** as described herein.

Computing device **750** in these alternative embodiments may be connected to an electronic network, such as the Internet, to enable it to communicate with central monitoring unit **30** or the like. The programming of computing device **750** that enables it to generate the derived data and/or the analytical status data may, with such a configuration, be modified or replaced by downloading the relevant data to computing device **750** over the electronic network.

As still a further alternative embodiment, computing device **750** may be provided with a custom written plug-in adapted to provide data display functionality through use of a well known browser program. In this embodiment, stand alone sensor device **700** collects and/or generates the data indicative of various physiological and/or contextual parameters of the user, the derived data, the data input by the user, data input as a result of device-to-device interaction shown at **720** and **725**, and/or analytical status data based thereon and uploads this data to computing device **750**. The plug-in provided in computing device **750** then generates appropriate display pages based on the data which may be viewed by the user using the browser provided with computing device **750**. The plug-in may be modified/updated from a source such as central monitoring unit **30** over an electronic network such as the Internet.

Referring to FIGS. **22-26**, an alternate embodiment of a sensor device is shown at **800**. Sensor device **800** may be a specific embodiment of either sensor device **10** described in

connection with FIGS. **1-11** or stand alone sensor device **700** described in connection with FIG. **21**. Sensor device **800** includes housing **805** affixed to flexible section **810**, which is similar to flexible wing body **410** shown in FIGS. **12-17**. Flexible section **810** is adapted to engage, such as by wrapping around or conforming to, at least a portion of the human body, such as the upper arm, to enable sensor device **800**, in combination with a removable strap **811** inserted through slots **812** provided in flexible section **810**, to be worn on the body. Preferably, flexible section **810** is made of a material having a durometer of between 75 and 85 Shore A. Flexible section **810** may take on a variety of shapes and may be made of a cloth material, a flexible plastic film, or an elastic material having an adhesive similar in structure to a Band-Aid® disposable adhesive bandage. In the embodiment shown in FIGS. **22-26**, housing **805** is permanently affixed to flexible section **810**, such as by an over molding or co-molding process, through the use of an adhesive material, or by a fastening mechanism such as one or more screws. Housing **805** includes top portion **815** affixed to bottom portion **820** by any known means, including, for example, an adhesive material, screws, snap fittings, sonic welding, or thermal welding. According to a preferred embodiment, a watertight seal is provided between top portion **815** and bottom portion **820**. Such a water-tight seal is provided when sonic welding or thermal welding is used. Alternatively, an O-ring could be provided between top portion **815** and bottom portion **820** to create the water-tight seal.

As can be seen most readily in FIGS. **23**, **24** and **26**, affixed to bottom portion **820** of housing **805** are GSR sensors **825**. GSR sensors **825** measure the conductivity of the skin between two points and may comprise electrodes formed of a material such as stainless steel, gold or a conductive carbonized rubber. Preferably, GSR sensors **825** have an oblong, curved shape as shown in FIG. **23**, much like a kidney bean shape, that allows some portion of GSR sensors **825** to maintain contact with the body even if sensor device **800** is rocking or otherwise moving while being worn. Most preferably, GSR sensors **825** include raised bumps **830**, or some other three-dimensional textured surface, along the surface thereof to perturb the skin and push between hairs to ensure good contact with the skin. In addition, raised bumps **830** provide channels for the movement of sweat underneath sensor device **800**, rather than trapping sweat, no matter the orientation of sensor device with respect to the body. Also affixed to bottom portion **820** are heat flux skin interface component **835** and skin temperature skin interface component **840**, each comprising a plate made of a thermally conductive material such as stainless steel. Preferably, heat flux skin interface component **835** and skin temperature skin interface component **840** are made of a material having thermal conduction properties of at least 12.9 W/mK, such as 304 stainless steel. Preferably, GSR sensors **825** are spaced at least 0.44 inches apart from one another, and at least 0.09 inches apart from heat flux skin interface component **835** and skin temperature skin interface component **840**. GSR sensors **825**, heat flux skin interface component **835** and skin temperature skin interface component **840** are adapted to be in contact with the wearer's skin when sensor device **800** is worn, and facilitate the measurement of GSR, heat flux from the body and skin temperature data. As can be seen most readily in FIGS. **22**, **24** and **26**, affixed to top portion **815** of housing **805** are heat flux ambient interface component **845** and ambient temperature interface component **850**, which also are made of a thermally conductive material such as stainless steel, preferably a material having thermal conduction properties of at least 12.9 W/mK, such as 304 stainless steel. Heat flux ambient interface component **845** and ambient temperature interface component **850** facilitate the measurement of heat flux from the body and ambient temperature, respectively, by providing a thermal interface to the surrounding environment. To further enhance the measurement of these parameters, holes **855** are provided in flexible section **810** to expose heat flux ambient interface component **845** and ambient temperature interface component **850** to the ambient air. Preferably, holes **855** are sized so that flexible section **810** occludes as little skin as possible in the regions surrounding heat flux ambient interface component **845** and ambient temperature interface component **850** so as to allow air flowing off of the skin of the wearer to pass these components.

GSR Sensors **825**, heat flux, skin interface component **835**, skin temperature skin interface component **840**, or any other sensing component that comes into contact with the skin may be provided with a plurality of microneedles for, among other things, enhancing electrical contact with the skin and providing real time access to interstitial fluid in and below the epidermis, which access may be used to measure various parameters such as pH level of the skin through electrochemical, impedance based or other well known methods. Microneedles enhance electrical contact by penetrating the stratum corneum of the skin to reach the epidermis. Such microneedles are well known in the art and may be made of a metal or plastic material. Prior art microneedles are described in, for example, U.S. Pat. No. 6,312,612 owned by the Procter and Gamble Company. Based on the particular application, the number, density, length, width at the point or base, distribution and spacing of the microneedles will vary.

Referring to FIG. **26**, which is a cross-section taken along lines A-A in FIG. **22**, the internal components of sensor device **800**, housed within housing **805**, are shown. Printed circuit board or PCB **860** is affixed to top portion **815** of housing **805** and receives and supports the electronic components provided inside housing **805**. Affixed to a bottom side of PCB **860** and electronically coupled to GSR sensors **825** are contacts **865**, which preferably comprise gold plated contact pins such as the Pogo® contacts available from Everett Charles Technologies in Pomona, Calif. Also affixed to the bottom side of PCB **860** is skin temperature thermistor **870**, a suitable example of which is the model 100K6D280 thermistor manufactured by BetaTherm Corporation in Shrewsbury, Mass. Skin temperature thermistor **870** is, according to a preferred embodiment, thermally coupled to skin temperature skin interface component **840** by a thermally conductive interface material **875**. Thermally conductive interface material **875** may be any type of thermally conductive interface known in the art, including, for example, thermally conductive gap fillers, thermally conductive phase change interface materials, thermally conductive tapes, thermally conductive cure-in-place compounds or epoxies, and thermal greases. Suitable thermally conductive interface materials include a boron nitride filled expanded polytetrafluoroethylene matrix sold under the trademark PolarChip CP8000 by W. L. Gore & Associates, Inc. and a boron nitride and alumina filled silicone elastomer on an adhesive backed 5 mil. (0.013 cm) thick aluminum foil carrier called A574, which is available from the Chomerics division of Parker Hannefin Corp. located in Woburn, Mass. Provided on top of PCB **860** is near-body ambient temperature thermistor **880**, a suitable example of which is the model NTHS040ZN0IN100KJ thermistor manufactured by Vishay Intertechnology, Inc. in Malvern, Pa. Near-body ambient temperature thermistor **880** is thermally coupled to ambient temperature interface component **850** by thermally conductive interface material **875**.

Still referring to FIG. **26**, a preferred embodiment of sensor device **800** includes a particular embodiment of an apparatus for measuring heat flux between a living body and the ambient environment described in co-pending application Ser. No. 09/822,890, the disclosure of which is incorporated herein by reference in its entirety. Specifically, heat conduit **885** is provided within housing **805**. As used herein, the term heat conduit refers to one or more heat conductors which are adapted to singly or jointly transfer heat from one location to another, such as a conductor made of stainless steel. Heat conduit **885** is thermally coupled to heat flux skin interface component **835** by thermally conductive interface material **875**. Provided on the bottom side of PCB **860** is a first heat flux thermistor **890**A, and provided on the top side of PCB **860** is a second heat flux thermistor **890**B. PCB **860** acts as a base member for supporting these components. It will be appreciated that a base member separate and apart from PCB **860** may be substituted therefor as an alternative configuration. A suitable example of both heat flux thermistors **890**A and **890**B is the. Heat flux Thermistor **890**A and **890**B are soldered to pads provided on PCB **860**. The second heat flux thermistor **890**B is thermally coupled to heat flux ambient interface **845** by thermally conductive interface material **875**. As is well-known in the art, PCB **860** is made of a rigid or flexible material, such as a fiberglass, having a preselected, known thermal resistance or resistivity K. The heat flux off of the body of the wearer can be determined by measuring a first voltage VI with heat flux thermistor **890**A and a second voltage V**2** with heat flux thermistor **890**B. These voltages are then electrically differenced, such as by using a differential amplifier, to provide a voltage value that, as is well known in the art, can be used to calculate the temperature difference (T2−T1) between the top and bottom sides of PCB **860** . Heat flux can then be calculated according to the following formula:

$$\text{Heat Flux}=K(T2-T1)$$

The combination of PCB **860** and heat flux thermistors **890**A and **890**B are thus a form of a heat flux sensor One advantage of the configuration of the apparatus for measuring heat flux shown in FIG. **26** is that, due to the vertical orientation of the components, assembly of the apparatus for measuring heat flux, and thus sensor device **800** as a whole, is simplified. Also adding to the simplicity is the fact that thermally conductive interface materials that include a thin adhesive layer on one or both sides may be used for thermally conductive interface materials **875**, enabling components to be adhered to one another. In addition, thermistors **890**A and **890**B are relatively inexpensive components, as compared to an integral heat flux sensor such as those commercially available from RdF Corporation of Hudson, N.H., thereby reducing the cost of sensor device **800**. Although heat flux thermistors **890**A and **890**B are described as being provided on PCB **860** in the embodiment shown in FIG. **26**, it will be appreciated that any piece of material having a known resistivity K may be used. Furthermore, other temperature measuring devices known in the art, such as a thermocouple or thermopile, may be substituted for heat flux thermistors **890**A and **890**B. As a further alternative, heat conduit **885** may be omitted such that thermal communication between heat flux thermistor **890**A and heat flux skin interface component **835** is provided by one or more pieces of thermally conductive interface material **875**. As still a further alternative, heat flux skin interface component **835** may be omitted such that thermal communication between heat flux thermistor **890**A and the skin is provided by either or both of heat conduit **885** and one or more pieces of thermally conductive interface material **875**. In any of the embodiments described herein, the combination of one or more of heat conduit **885**, one or more pieces of thermally conductive interface material **875**, and heat flux skin interface component **835** act as a thermal energy communicator for placing heat flux thermistor **890**A in thermal communication with the body of the wearer of sensor device **800**.

FIG. **27** is a schematic diagram that shows an embodiment of the system architecture of sensor device **800**, and in particular each of the components that is either provided on or coupled to PCB **860**.

As shown in FIG. **27**, PCB **860** includes processing unit **900**, which may be a microprocessor, a microcontroller, or any other processing device that can be adapted to perform the functionality described herein, in particular the functionality described in connection with microprocessor **20** shown in FIG. **2**, processing unit **490** shown in FIG. **20**, or stand alone sensor device **700** shown in FIG. **21**. A suitable example of processing unit **900** is the Dragonball EZ sold by Motorola, Inc. of Schaumburg, Ill. Also provided on PCB **860** is accelerometer **905**, which may be either a two-axis or a three-axis accelerometer. A suitable example of a two-axis accelerometer is the Model ADXL202 accelerometer sold by Analog Devices, Inc. of Norwood, Mass., and a suitable example of a three-axis accelerometer is the model ACH-04-08-05 accelerator sold by Measurement Specialties Incorporated in Norristown, Pa. The output signals of accelerometer **905** are passed through buffers **910** and input analog to digital, referred to as A/D, converter **915** that in turn is coupled to processing unit **900**. GSR sensors **825** are coupled to A/D converter **915** through current loop **920**, low pass filter **925**, and amplifier **930**. Current loop **920** comprises an opamp and a plurality of resistors, and applies a small, fixed current between the two GSR sensors **825** and measures the voltage across them. The measured voltage is directly proportional to the resistance of the skin in contact with the electrodes. Similarly, heat flux thermistors **890**A and **890**B are coupled to A/D converter **915** and processing unit **900**, where the heat flux calculations are performed, through low pass filter **935** and amplifier **940**.

Battery monitor **945**, preferably comprising a voltage divider with low pass filter to provide average battery voltage, monitors the remaining power level of rechargeable battery **950**. Rechargeable battery **950** is preferably a LiIon/LiPolymer 3.7 V Cell. Rechargeable battery **950**, which is the main power source for sensor device **800**, is coupled to processing unit **900** through voltage regulator **955**. Rechargeable battery **950** may be recharged either using recharger **960** or USB cable **965**, both of which may be coupled to sensor device **800** through USB interface **970**. Preferably, USB interface **970** is hermetically sealable, such as with a removable plastic or rubber plug, to protect the contacts of USB interface **970** when not in use.

PCB **860** further includes skin temperature thermistor **870** for sensing the temperature of the skin of the wearer of sensor device **800**, and near-body ambient temperature thermistor **880** for sensing the ambient temperature in the area near the body of the wearer of sensor device **800**. Each of these components is biased and coupled to processing unit **900** through A/D converter **915**.

According to a specific embodiment of sensor device **800**, PCB **860** may include one or both of an ambient light sensor and an ambient sound sensor, shown at **975** in FIG. **27**, coupled to A/D converter **915**. The ambient light sensor and ambient sound sensor may be adapted to merely sense the presence or absence of ambient light or sound, the state where a threshold ambient light or sound level has been exceeded, or a reading reflecting the actual level of ambient light or sound.

A suitable example of an ambient sound sensor is the WM-60A Condenser Microphone Cartridge sold by Matsushita Electric Corporation of America located in Secaucus, N.J., and suitable examples of an ambient light sensor are the Optek OPR5500 phototransistor and the Optek OPR5910 photodiode sold by Optek Technology, Inc. located in Carrollton, Tex. In addition, PCB **860** may include ECG sensor **980**, including two or more electrodes, for measuring the heart rate of the wearer, and impedance sensor **985**, also including a plurality of electrodes, for measuring the impedance of the skin of the wearer. Impedance sensor **985** may also be an EMG sensor which gives an indication of the muscular activity of the wearer. The electrodes forming part of ECG sensor **980** or impedance sensor **985** may be dedicated electrodes for such sensors, or may be the electrodes from GSR sensors **825** multiplexed for appropriate measurements. ECG sensor **980** and impedance sensor **985** are each coupled to A/D converter **915**.

PCB **860** further includes RF transceiver **990**, coupled to processing unit **900**, and antenna **995** for wirelessly transmitting and receiving data to and from wireless devices in proximity to sensor device **800**. RF transceiver **990** and antenna **995** may be used for transmitting and receiving data to and from a device such as a treadmill being used by a wearer of sensor device **800** or a heart rate monitor worn by the wearer of sensor device **800**, or to upload and download data to and from a computing device such as a PDA or a PC. In addition, RF transceiver **990** and antenna **995** may be used to transmit information to a feedback device such as a bone conductivity microphone worn by a fireman to let the fireman know if a condition that may threaten the fireman's safety, such as hydration level or fatigue level, has been sensed by sensor device **800**. As described in detail in connection with FIG. **21**, stand along sensor device **700** may be coupled to computing device **750** to enable data to be communicated therebetween. Thus, as a further alternative, RF transceiver **990** and antenna **995** may be used to couple sensor device **800** to a computing device such as computing device **750** shown in FIG. **21**. Such a configuration would enable sensor device **800** to transmit data to and receive data from the computing device **750**, for example a computing device worn on the wrist. The computing device could be used to enable a user to input data, which may then be stored therein or transmitted to sensor device **800**, and to display data, including data transmitted from sensor device **800**. The configuration would also allow for computing tasks to be divided between sensor device **800** and computing device **750**, referred to herein as shared computing, as described in detail in connection with FIG. **21**.

As shown in FIG. **27**, PCB **860** may include proximity sensor **1000** which is coupled to processing unit **900** for sensing whether sensor device **800** is being worn on the body. Proximity sensor **1000** may also be used as a way to automatically power on and off sensor device **800**. Proximity sensor preferably comprises a capacitor, the electrical capacitance of which changes as sensor device **800** gets closer to the body. PCB **860** may also include sound transducer **1005**, such as a ringer, coupled to processing unit **900** through driver **1010**.

Sensor device **800** may also be provided with sensors in addition to those shown in FIG. **27**, such as those taught by U.S. Pat. No. 5,853,005, the disclosure of which is incorporated herein by reference. The '005 patent teaches a sound transducer coupled to a pad containing an acoustic transmission material. The pad and sound transducer may be used to sense acoustic signals generated by the body which in turn may be converted into signals representative of physiological parameters such as heart rate or respiration rate. In addition, rather than being integrated in sensor device **800** as part of one or more of housing **805**, flexible section **810** or strap **811**, a sensing apparatus as taught by the '005 patent may be provided separate from sensor device **800** and be coupled, wired or wirelessly, to sensor device **800**. According to the '005, the sound or acoustic transducer is preferably a piezoelectric, electret, or condenser-based hydrophone, similar to those used by the Navy in sonar applications, but can be any other type of waterproof pressure and motion sensing type of sensor.

The sensing apparatus as taught by the '005 patent is an example of what shall be referred to herein as a non-ECG heart parameter sensor, meaning that it has the following two qualities: (1) it does not need to make measurements across the torso using at least two contact separated by some distance; and (2) it does not measure electrical activity of the heart. The sensing apparatus as taught by the '005 patent has been shown to be capable of detecting heart rate information and information relating to individual beats of the heart with high reliability under certain circumstances, depending primarily on factors including the proximity of the apparatus to the heart, the level of ambient noise, and motion related sound artifacts caused by the movement of the body. As a result, the sensing apparatus as taught by the '005 patent is most reliable when worn in an ambient environment with a low level of ambient noise and when the body is not moving.

Certain characteristics, sensors and sensing capabilities of sensor device **800** are able to improve the reliability and accuracy of an acoustic-based non-ECG heart parameter sensor **1012** such as the sensing apparatus as taught by the '005 patent that is incorporated therein or coupled thereto. For example, in one specific embodiment, sensor device **800** is particularly suited to be worn on the upper arm. The upper arm is a good location for a sensor device **800** having an acoustic-based non-ECG heart parameter sensor **1012** incorporated therein because it is near the heart and provides a space for sensor device that allows it to be unobtrusive and comfortable to wear. In addition, ambient sound sensor shown at **975** in FIG. **27** may be used to filter out ambient noise from the signals detected by the acoustic-based non-ECG heart parameter sensor **1012** in order to isolate the sound signal originating from the body. Filtering of the signal produced by an acoustic-based non-ECG heart parameter sensor **1012** such as the sensing apparatus as taught by the '005 patent in this manner may be used both in the case where such an apparatus is incorporated in sensor device **800** and in the case where it is separated from but coupled to sensor device **800** as described above. Furthermore, the sound generated from the motion of the body that is not created by the heart can be accounted for and adjusted for through the use of a sensor or sensors that detect or that may be used to identify body sounds generated as a result of motion of the body, such as accelerometer **905** shown in FIGS. **27** and **29** or the body position or muscle pressure sensors identified in Table 1. For example, footfalls create sound within the body that can lower the signal to noise ratio of an acoustic-based non-ECG heart parameter sensor **1012**, which will likely result in false positive and false negative heart beat identifications. As is well known in the art, accelerometer **905** may function as a footfall indicator. Accelerometer **905** may thus be used to filter or subtract out from the signal detected by the acoustic-based non-ECG heart parameter sensor **1012** signals related sound motion artifacts caused by the movement of the body such as by footfalls.

Several methodologies for performing the filtering or subtracting of signals described herein are known to those of ordinary skill in the art. Such filtering or subtracting of signals

used in connection with the monitoring of disparate signal, some used for noise cancellation and some used for their direct measure, is also known as data integration.

Sensor device **800** may also be used to put parameters around and provide a context for the readings made by a non-ECG heart parameter sensor **1012** so that inaccurate reading can be identified and compensated for. For example, sensor device **800** may be used to detect real time energy expenditure of the wearer as well as the type of activity in which the wearer is engaging, such as running or riding a bike. Thus, as another example of how the sensors and sensing capabilities of sensor device **800** may be used to increase the reliability and accuracy of a non-ECG heart parameter sensor **1012** through data integration, the energy expenditure and activity type information can he used to provide a context in which the heart related parameters detected by the non-ECG heart parameter sensor **1012** can be assessed and possibly filtered. For example, if sensor device **800** detects that a person is burning 13 calories per minute and is biking, and the non-ECG heart parameter sensor **1012** is indicating that the wearer's heart rate is 60 beats per minute, then it is highly likely that further filtration of the signal from the non-ECG heart parameter sensor **1012** is necessary.

Other well known non-ECG heart parameter sensing devices include, for example, those based on micro-power impulse radar technology, those based on the use of piezoelectric based strain gauges, and those based on plethysmography, which involves the measurement of changes in the size of a body part as modified by the circulation of blood in that part. It will be appreciated that the performance of these devices may also be enhanced through the use of data integration as described herein.

Another sensor that may be incorporated into the sensor device **800** measures the pressure with which sensor device **800** is held against the body of the wearer. Such a sensor could be capacitive or resistive in nature. One such instantiation places a piezo-resistive strain gauge on the back of the enclosure to measure the small deflection of the plastic as increasing force is applied. Data gathered from such a sensor can be used to compensate the readings of other sensors in sensor device **800** according to the readings of such a sensor.

Also provided on PCB **860** and coupled to processing unit **900** is switch **1015**. Switch **1015** is also coupled to button **1020** provided on housing **805**. Button **1020**, by activating switch **1015**, may be used to enter information into sensor device **800**, such as a time stamp to mark the occurrence of an event such taking medication. Preferably, button **1020** has a tactile, positive d-tent feedback when depressed, and a concave shape to prevent accidental depression. Also, in the embodiment shown in FIGS. **22-26**, flexible section **810** includes membrane **1022** that covers and seals button **1020**. In the embodiments shown in FIGS. **30-32**, a similar membrane **1022** may be provided on flexible section **810**, and, preferably, also on housing **805** such that button **1020** is sealed when housing **805** is removed from flexible section **810**. Alternatively, a hole may be provided in flexible section **810** exposing button **1020** and membrane **1022** when housing **805** is attached to flexible section **810**. In addition, coupled to processing unit **900** on PCB **860** are LCDs and/or LEDs **1025** for outputting information to the wearer. FIG. **28** shows an alternate embodiment of sensor device **800** in which LCD **1025** is provided on a top face of housing **805**. As an alternative to LCDs or LEDs **1025**, sensor device **800** may include a prior art electrochemical display that retains its ability to display information even when power is no longer being provided thereto. Such a display is described in U.S. Pat. No. 6,368,287 B1, the disclosure of which is incorporated herein by reference, and includes a plurality of markers comprising a miniature heating element and a coating of heat sensitive material. When current is passed through one of the heating elements, it heats up, thereby inducing a change in the color of the coating material. The color change is permanent, even after the heating element cools down. Such displays are relatively inexpensive and thus are well adapted for use in embodiments of sensor device **800** that are designed to be disposable, possibly single use, items.

Oscillator **1030** is provided on PCB **860** and supplies the system clock to processing unit **900**. Reset circuit **1035** is coupled to processing unit **900** and enables processing unit to be reset to a standard initial setting.

Finally, non-volatile data storage device **1040**, such as a FLASH memory chip, is provided for storing information collected and/or generated by sensor device **800**. Preferably, data storage device **1040** includes at least 128K of memory. Non-volatile program storage device **1045**, such as a FLASH ROM chip, is provided for storing the programs required to operate sensor device **800**.

As an alternative, a microprocessor with integral A/D converters, data storage, and program storage may be substituted for processing unit **900**, A/D converter **915**, data storage device **1040** and non-volatile memory **1045**. A suitable example of such a microprocessor is the Texas Instruments Model MSP430 processor.

Any component forming a part of sensor device **800** that comes in contact with the wearer's skin should not, in a preferred embodiment, degrade in durometer, elasticity, color or other physical or chemical properties when exposed to skin oils, perspiration, deodorant, suntan oils or lotions, skin moisturizers, perfume or isopropyl alcohol. In addition, such components preferably are hypoallergenic.

FIG. **29** shows an alternate embodiment of PCB **860** in which rechargeable battery **950**, voltage regulator **955**, recharger **960** and USB cable **965** have been replaced by disposable AAA battery **1050** and boost converter **1055**. Boost converter **1055** uses an inductor to boost the voltage of AAA battery **1050** to the 3.0-3.3 V required to run the electronics on PCB **860**. A suitable boost converter **1055** is the model MAX1724 sold by Maxim Integrated Products, Inc. of Sunnydale, Calif.

Referring to FIGS. **30** and **31**, an alternate embodiment of sensor device **800** is shown in which housing **805** is removably attached to flexible section **810**. As shown in FIGS. **30** and **31**, housing **805** is provided with groove **1060** along with outer edge thereof which is adapted to receive therein tongue **1065** provided on the bottom side of flexible section **810** for securely but removably attaching housing **805** to flexible section **810**. Through the interaction of groove **1060** and tongue **1065**, housing **805** may thus be readily popped in and out of flexible section **810**. Such a configuration enables housing **805** to be readily attached to multiple flexible sections having sizes and shapes that are different than flexible section **810** as long as the flexible section includes a tongue similar to tongue **1065**. Such alternate flexible sections may be sized and shaped to fit on particular parts of the body, such as the calf or thigh, and may comprise a garment such as a shirt having the tongue or tongues located in places of interest, such as the upper arm or upper left chest, the latter enabling housing **805** to be positioned over the heart of the wearer. Co-pending U.S. application Ser. No. 09/419,600, owned by the assignee of the present application and incorporated herein by reference, identifies several locations on the body that are particularly well adapted to receive particularly sized and shaped sensor devices so as to avoid interference with the motion and flexibility of the body. As will be appre-

ciated by those of skill in the art, groove **1060** and tongue **1065** may be swapped such that groove **1060** is provided in flexible section **810** and tongue **1065** is provided on housing **805**. As will also be appreciated by those of skill in the art, multiple alternative structures exist for securely but removably attaching housing **805** to flexible section **810**. These alternative structures include, without limitation, temporary adhesives, screws, a tight fit between having **805** and flexible section **810** that holds the two together by friction, magnets provided in each of housing **805** and flexible section **810**, well-known snaps and snapping mechanisms, a threaded portion provided on housing **805** adapted to be received by threads in flexible section **810**, an O-ring or similar elastic band adapted to fit around a portion of flexible section **810** and into a groove provided in housing **805** when flexible section **810** is placed over housing **805**, or merely pressure when housing **805** is placed on the body and flexible section **810** is placed thereover and attached to the body such as by strap **811**. Referring to FIG. **32**, a still further alternative structure for removably securing flexible section **810** to housing **805** is shown in which flexible section **810** comprises and elastic or similar band that is adapted to fit into a groove **1062** provided in housing **805**. Housing **805** and flexible section **810** may then be placed on the body and held in place by strap **811** or the like inserted through gaps **1064** between housing **805** and flexible section **810**.

FIG. **33** shows an alternate embodiment of sensor device **800** as shown in FIGS. **30** and **31** that is adapted to automatically adjust or alter the operating parameters of sensor device **800**, such as its functionality, settings or capabilities, depending on the particular flexible section to which housing **805** is attached. For example, the calculation of a parameter, such as energy expenditure, may depend on information that is particular each individual, such as age, height, weight, and sex. Rather than having each individual enter that information in sensor device **800** each time he or she wants to wear the device, each individual that is going to wear the device could enter the information once and have their own flexible section that causes sensor device to make measurements based on his or her particular information. Alternatively, the memory in sensor device **800** for storage of user data may be divided into several compartments, one for each user, so as to avoid comingling of user data. Sensor device **800** may be adapted to alter where collected data is stored depending on the particular flexible section that is being used. In addition, sensor device **800** may be calibrated and recalibrated differently over time depending on the particular flexible section to which housing **805** is attached as it learns about each particular wearer and his or her habits, demographics and/or activities.

According to a particular embodiment, housing **805** is provided with first magnetic switch **1070** and second magnetic switch **1075**, each on PCB **860**. Provided on or inside flexible section **810**, such as by an insert molding technique, is magnet **1080**. Magnet **1080** is positioned on or inside flexible section **810** such that it aligns with and thereby activates one of first magnetic switch **1080** and second magnetic switch **1075** when housing **805** is attached to flexible section **810**. In the embodiment shown in FIG. **33**, second magnetic switch **1075** will be activated. A second flexible section **810** similar to flexible section **810** shown in FIG. **33** will also be provided, the difference being that the magnet **1080** provided therewith will be positioned such that first magnetic switch **1070** is activated when housing **805**, the same housing **805** shown in FIG. **33**, is attached to the second flexible section **810**. Housing **805**, and in particular processing unit **900**, may be programmed to alter its functionality, settings or capabilities depending on which one of first magnetic switch **1070** and second magnetic switch **1075** is activated, i.e., which particular flexible section **810** is being used. Thus, a husband and wife may share a single housing **805** but have different flexible wings **810** with magnets **1080** located in different places. In such a case, housing **805** may be programmed to operate with functionality, settings or capabilities particular to the husband when first magnetic switch **1070** is activated, and with functionality, settings or capabilities particular to the wife when second magnetic switch **1075** is activated. Although only two magnetic switches are shown in FIG. **33**, it will be appreciated that multiple magnetic switches and multiple flexible sections may be used to allow sensor device **800** to be programmed for multiple wearers, such as an entire family, with each family member having his or her own flexible section. As still a further alternative, multiple flexible sections may be provided that are adapted to be worn on different parts of the body, each having a magnet placed in a different location. Housing **805** may then be programmed to have functionality, settings or capabilities particular to the type of sensing to be done on each different part of the body, with magnetic switches placed so as to be activated when housing **805** is attached to the appropriate flexible section. Sensor device **800** according to this embodiment is thus a "smart" device. As will be appreciated by one of skill in the art, many alternatives to first and second magnetic switches **1070** and **1075** and magnet **1080** may be used to provide the functionality described in connection with FIG. **33**. Such alternatives include, without limitation, mechanical switches provided in housing **805** that are activated by a protruding portion, such as a pin, provided at a particular location on flexible section **810**, optical switches comprising an array of light sensors provided in housing **805** that are activated when the surrounding light is blocked, reflected or filtered in a particular way with one or more translucent sections and a single opaque, reflective or filtering section being selectively provided on flexible section **810** at particular locations, the translucent sections not activating the corresponding optical switches and the opaque, reflective or filtering section activating the corresponding optical switch, electronic switches provided in housing **805** activated by a conductor provided in particular locations in flexible section **810**. As still a further alternative, housing **805** may be provided with multiple switches and each flexible section **810** may be provided with one or more switch activators positioned to activate certain selected switches. The operating parameters of housing **805** would in this embodiment be adapted to change depending upon the particular set of one or more switches that are activated. This embodiment thus employs an encoding scheme to alter the operating parameters of housing **805** depending on which flexible section **810** is used. As still a further alternative, housing **805** may be provided with a single switch adapted to alter the operating parameters of housing **805** depending upon the way in which or state in which it is activated, such as by the properties of the switch activators. For example, the switch may be a magnetic switch that is activated a plurality of different ways depending upon the magnetic level or strength of the magnet provided in each flexible section **810**. A plurality of flexible sections **810** could then be provided, each having a magnet of a different strength. In addition, any particular flexible section **810** may be provided with a plurality of magnets having different strengths with each magnet being able to activate the switch in housing **805** in a different manner. Such a flexible section **810** would be able to selectively trigger different operating parameters of housing **805**, such as by rotating a portion of flexible wing **805** to align a particular magnet with the switch. As an alternative, the switch could be an electrical switch and

the switch activators could be conductors having different resistances. The switch would, in this embodiment, be activated in different ways depending on the measured resistance of the switch activator that closes the circuit.

Referring to FIG. **34**, as still a further embodiment of sensor device **800**, housing **805** maybe provided with adhesive material **1085** on a back side thereof to enable housing **805** to be removably attached to selected portions of the body, such as the upper left chest over the heart, without flexible section **810**. Adhesive material **1085** may be any well-known adhesive that would securely attach housing **805** to the body and enable it to be worn for a period of time, but that would also readily enable housing **805** to be removed from the body after use. Adhesive material **1085** may comprise, for example, a double sided adhesive foam backing that would allow for comfortable attachment of housing **805** to the body. Furthermore, housing **805** may be made of a well-known flexible plastic film or the like, such as that taught in U.S. Pat. No. 6,368,287 B1, the disclosure of which is incorporated herein by reference, that would, due to low cost, enable sensor device **800** to be disposable. Such a disposable sensor device may also include an electrochemical display described above to enhance its disposability. In an embodiment adapted for placement over the upper left chest or any other appropriate region for detecting heart related parameters, sensor device **800** would include one or more sensors described herein for sensing heart related parameters such as heart rate, beat-to-beat or interbeat variability, ECG or EKG, pulse oximetry, heart sounds, such as detected with a microphone, and mechanical action of the heart, such as detected with ultrasound or micro-pulse radar devices.

FIGS. **35**A-H and **36**A-H illustrate aspects of the present invention relating to the ergonomic design of sensor device **800**. Referring to FIGS. **35**A and **35**B, a housing **1100** of a prior art sensor device having a rectangular cross-section is shown resting on the body **1110** of a wearer of the prior art sensor device. As seen in FIG. **35**B, when body **1110** flexes and forms a concavity, as may happen many times each minute on various parts of the body or for extended periods of time depending on the position of various body parties during particular activities, a significant portion of housing **1100** is caused to be removed from body **1110**. When housing **1100** is caused to be removed in this manner, the ability of the prior art sensor device to accurately make measurements and collect data will be jeopardized, especially for any readings to be taken near the center of the cross-section indicated by the arrows in FIG. **35**B.

FIGS. **35**C-H illustrate a cross-section of housing **805** of sensor device **800** taken along lines C-C shown in FIG. **23** according to various aspects of the present invention. The cross-section shown in FIGS. **35**C-H is taken near the middle portion of housing **805** shown in FIG. **23** between GSR sensors **825**. As seen in FIG. **35**C, bottom surface **1115** of housing **805** is provided with a generally convex shape such that, when body **1110** flexes and forms a concavity, a substantial portion of bottom surface **1115** of housing **805** remains in contact with body **1110** by fitting into the concavity. As seen in FIG. **35**D, when body **1110** flexes in the opposite direction so as to create a convexity, the center portion of housing **805**, indicated by the arrow in FIG. **35**D, remains in contact with body **1110**. As shown in FIG. **35**E, this is true even if housing **805** were to rock within the concavity formed in body **1110**. Referring to FIG. **35**F, body **1110** may, at times, flex to an extreme degree, i.e., more than the anticipated maximum that it was designed for, such that, even if bottom surface **1115** is provided with a convex shape, it may still cause bottom surface **1115** to be removed from body **1110**. A solution to this problem is illustrated in FIG. **35**G, wherein the lateral ends **1120**A and **1120**B of housing **805** are provided with radiused portions **1125**A and **1125**B, respectively adjacent to and including opposite lateral ends of bottom surface **1115**. Radiused portions **1125**A and **1125**B enable housing **805** to sit lower and fit into the concavity created when body **1110** flexes to an extreme degree. In addition, radiused portions **1125**A and **1125**B provide for more comfortable wear as they eliminate sharp edges **1130**A and **1130**B shown in FIG. **35**F that contact body **1110**. FIG. **35**H shows how body **1110** will tend to conform to the shape of housing **805** due at least in part to the viscosity of the skin when body **1110** is in a relaxed condition.

FIG. **36**A shows a cross-section of housing **1100** of prior art sensor device taken along a line perpendicular to the line on which the cross-section shown in FIGS. **35**A and **35**B was taken. As seen in FIG. **36**A, when housing **1100** is placed on a convex portion of body **1110**, significant portions of housing **1100**, specifically the lateral ends thereof indicated by the arrows in FIG. **36**A, are not in contact body **1110**. FIGS. **36**B-H show a cross-section of housing **805** according to various aspects of the present invention taken along lines D-D shown in FIG. **23**. As seen in FIG. **36**B, bottom surface **1115** of housing **805** is provided with a generally concave shape adapted to receive the convex portion of body **1110**. Referring to FIG. **36**C, lateral ends **1130**A and **1130**B maybe provided with radiused portions **1135**A and **1135**B adjacent to and including opposite lateral ends of bottom surface **1115**, which allow housing **805** to rest in closer contact with body **1110**, even when body **1110** flexes to an extreme degree, i.e., more than the anticipated maximum that it was designed for, and remove sharp edges **1140**A and **1140**B shown in FIG. **36**B, providing for more comfortable wear. As shown in FIG. **36**D, body **1110** will tend to conform to the shape of housing **805** when body **1110** is in a relaxed condition. As shown in FIGS. **36**E and **36**F, good contact with body **1110** is maintained at the points illustrated by the arrows when body **1110** is flexed in a manner that decreases the convex shape thereof or that creates a convexity therein. Thus, it will be appreciated that it is advantageous to place sensors or sensing elements at the points indicated by the arrows because those points will tend to remain in contact with body **1110**. FIGS. **36**G and **36**H, showing, for example, heat flux skin interface component **835** and skin temperature skin interface component **840** placed at the points indicated by the arrows, illustrate this point. As seen in FIGS. **36**G and **36**H, there is more than point contact between body **1110** and skin temperature skin interface component **840**.

FIG. **37** is an isometric view of housing **805** according to an embodiment of the present invention in which bottom surface **1115** has both the generally convex shape shown in FIGS. **35**C-H and the generally concave shape shown in FIGS. **36**B-H. Specifically, bottom surface **1115**, which is the inner surface of housing **805** for mounting adjacent to the body of the wearer, includes a longitudinal axis **1141** and a transverse axis **1142**. Bottom surface **115** has a generally concave shape having an axis of concavity **1143** that is coincident with longitudinal axis **1141**, meaning that it runs in a first direction from first lateral end **1144** of inner surface **1115** to second lateral end **1145** of inner surface **1115**. Bottom surface **1115** has a generally convex shape having an axis of convexity **1146** that is coincident with transverse axis **1142**, meaning that it runs in a second direction from third lateral end **1147** of inner surface **1115** to fourth lateral end **1148** of inner surface **1115**. As seen if FIG. **37**, the first and second directions, and longitudinal axis **1141** and transverse axis **1142**, are generally perpendicular to one another.

Referring to FIGS. **38**A-D, it will be appreciated that housing **805** having a flat top surface **1150** and flat lateral ends **1130**A and **1130**B may tend to be jostled and bumped by object **1155**, such as a wall or door or the corner or edge of a drawer, cabinet or desk, thereby moving housing **805** on body **1110** because such flat surfaces are not well adapted to deflect object **1155**. Movement of housing **805** on body **1110** will detrimentally effect the ability of sensor device **800** to accurately make measurements and collect data. FIGS. **39**A-G illustrate various aspects of the present invention that are adapted to deflect object **1155** and substantially prevent movement of housing **805** on body **1110**. In addition, the forms shown in FIGS. **39**A-G increase the durability of sensor device **800** and make it easier to put on and wear clothing and the like, such as a wetsuit, over sensor device **800**. As seen in FIG. **39**A, housing **805** may have tapered sides **1160**A and **1160**B such that the width of housing **805** decreases in the direction from bottom surface **1115** to top surface **1150**. Alternatively, referring to FIG. **39**B, top surface **1150** of housing **805** may have a convex shape. As a further alternative, as seen in FIG. **39**C, housing **805** may be provided with radiused portions **1165**A and **1165**B that meet with radiused portions **1135**A and **1135**B such that the lateral ends of housing **805** have a substantially semicircular shape. As shown in FIG. **39**D, housing **805** may have both tapered sides **1160**A and **1160**B and a top surface **1150** with a convex shape. FIG. **39**E is a modification of housing **805** shown in FIG. **39**E in which the points **1170**A and **1170**B where radiused portions **1135**A and **1135**B meet tapered sides **1160**A and **1160**B, respectively, are themselves radiused. FIG. **39**F is a variation of housing **805** shown in FIG. **39**E having elongated tapered sides **1160**A and **1160**B. FIG. **39**G shows how the ability of housing **805**, such as the embodiment shown in FIG. **39**E, to deflect object **1155** may be enhanced by the addition of flexible section **810** having a substantially convex outer surface. In addition, an air channel is provided between flexible section **810** and body **1110** to allow for heat to flow away from body **1110**.

Referring to FIG. **40**, a top plan view of a data input and output, abbreviated I/O, device **1200** is shown. FIG. **41** is a partial cross-sectional view of I/O device **1200** taken along lines A-A in FIG. **40**. According to one embodiment of the present invention, I/O device **1200** is in electronic communication with sensor device **1201** shown in FIG. **40** through communications connection **1230**, which may comprise a wired connection or a wireless connection as described elsewhere herein. Sensor device **1201** detects human physiological and/or contextual parameters, and maybe any one of sensor device **400** shown in FIGS. **12-17**, stand alone sensor device **700** shown in FIG. **21**, or sensor device **800** shown in FIGS. **22-26**. I/O device **1200** includes housing **1205** and LCD **1210** attached to housing **1205**. Various alternative display devices may be used instead of an LCD for displaying information, and such displaying of information and display devices are not limited to visual display devices, but may include various tactile or audible displays as described elsewhere herein. LCD **1210** may display information relating to the human physiological and/or contextual parameters detected by sensor device **1201** that is transmitted to I/O device by sensor device **1201** over communications connection **1230**. Thus, I/O device **1200** may display the same information and give the same feedback that any of the previously described sensor devices. I/O device **1200** also includes button **1215** and dial **1220**. Dial **1220** is moveably mounted within groove **1225** provided in housing **1205** such that dial **1220** is free to rotate about the top surface of housing **1205** in both clockwise and counter-clockwise directions within groove **1225**. Button **1215** and dial **1220** maybe used to enter or input information into I/O device **1200** for subsequent storage in and use by I/O device **1200** and/or transmission to sensor device **1201**. Thus, LCD **1210** may also display information that is entered or input into I/O device **1200**, or information generated from such entered or input information. I/O device **1200** may take on any number of forms, including, but not limited to, a watch-like form adapted to be worn on the wrist, a form that may be clipped to or integrated within a bag or clothing, or otherwise easily carried in a pocket or a bag, a form similar to well known commercially available pagers or PDAs, a form that may be removably, such as magnetically, attached to sensor device **1201** or another apparatus such as a car dashboard, or the form of a key fob. I/O device **1200** could also be a separate electronic device such as a weight scale, in which case the weight scale may comprise a sensor that communicates information to sensor device **1201**.

It will be appreciated that, in the embodiment where sensor device **1201** is stand alone sensor device **700**, I/O device **1200** may perform the manual data entry functions indicated by and described in connection with reference numeral **715** in FIG. **21**. Furthermore, in this embodiment, I/O device **1200** may be the computing device **750** shown in FIG. **21**. As described in connection with FIG. **21**, this configuration provides several possibilities for data collection, generation and display. Specifically, sensor device **1201**, as described in connection with stand alone sensor device **700** shown in FIG. **21** and the subject of co-pending application Ser. No. 09/923,181 owned by the assignee hereof, may collect and/or generate data indicative of various physiological and/or contextual parameters of the user, data manually input by the user, such as by using button **1215** and dial **1220**, and/or data input as a result of device-to-device interaction shown at **720** and **725** in FIG. **21**. Sensor device **1201** may then generate derived data and analytical status data which may be transmitted to I/O device **1200** for display. Alternatively, sensor device **1201** may be programmed to generate derived data, which, along with the data collected by sensor device **1201**, may be transmitted to I/O device **1200**, and I/O device **1200** may be programmed and/or otherwise adapted to include the utilities and algorithms necessary to create analytical status data based on the data indicative of one or more physiological and/or contextual parameters, the data derived therefrom, the data manually input by the user and/or the data input as a result of device-to-device interaction. The derived data and the analytical status data so created may be displayed to the user with LCD **1210**. As still a further alternative, the data indicative of various physiological and/or contextual parameters, the manually input data, and/or the data input as a result of device-to-device interaction may be transmitted to I/O device **1200**, and I/O device **1200** may be programmed and/or otherwise adapted to include the utilities and algorithms necessary to create derived data and/or analytical status data from the foregoing sources of data, all of which may then be displayed to the user with LCD **1210**. I/O device **1200** may also use the information input into it, such as by using button **1215** and dial **1220**, to create derived data and/or analytical status data, or may use data sensed by a sensor provided on I/O device **1200** as described elsewhere herein for the same purpose. In addition, the generation of such data may be shared with or offloaded to a separate computing device in electronic communication with I/O device **1200**, such as a local PC or a remote server. In each of the foregoing embodiments, I/O device may be in electronic communication with and transmit data to still another device, such as a computing device or an earpiece or tactile communications device worn by a firefighter or other first responder or a runner. In this case,

I/O device **1200** acts as a relay of information. In the case of the firefighter or other first responder, the data may indicate an important physiological state, such as level of hydration, as determined by sensor device **1201**, and in the case of a runner, the data may indicate caloric expenditure or distance traveled.

As known in the art, a number of configurations exist for constructing I/O device **1200** so that button **1215** and dial **1220** maybe used to input information into I/O device **1200**. Such buttons and dials are commercially available from Duraswitch Industries, Inc. located in Mesa, Ariz. under the names PUSHGATE™ pushbutton and thiNcoder™ ROTOR, respectively. U.S. Pat. No. 5,666,096, the disclosure of which is incorporated herein by reference, is owned by Duraswitch Industries, Inc. and describes the rotary switch technology used in the thiNcoder™ ROTOR switch. The '096 patent describes a rotary switch including a bottom substrate layer and a top membrane layer separated by a non-conductive spacer. The internal surface of the membrane layer carries a set of electrodes which define the spaced contacts of at least one electrical switch. The membrane layer also carries an electrically conductive metallic armature, in the form of a flat circular disc, that is received in an annular opening provided in the spacer. The switch further includes a rotatable actuating knob that carries a coupler in its underside. The coupler is a magnet which may be molded or otherwise entrapped in the knob. The coupler forces the armature against the internal surface of the membrane by means of the magnetic field originating from the coupler. The coupler functions both to create the switch contact pressure as well as to drag the armature from one contact to another when a user rotates the knob. In operation, when the knob is rotated, the coupler rotates with the knob and, by virtue of the magnetic coupling between the coupler and the armature, the armature rotates with the knob as well. As the armature rotates, it moves into and out of shorting contact with the contact or contacts on the membrane. When the armature is in shorting contact with a contact, the corresponding switch is closed. As will be appreciated by those of skill in the art, various encoding schemes are known for converting the actuation of one or more switches into information that may be used by a processor or other device coupled to the switch.

Alternatively, U.S. Pat. No. 6,225,980 B1, the disclosure of which is incorporated herein by reference, describes a rotary dial input device for portable computers including an insulating member overlying a printed circuit board, a spine rigidly connected to the printed circuit board, a rotatable dial, a switch ring carried by the dial and a snap ring rigidly connected to the dial. The dial, the switch ring and the snap ring rotate together around the periphery of the spine. The switch ring carries at least two magnets located 180° apart, and a plurality of Hall effect sensors are mounted on the printed circuit board and lie just under the surface of the insulating material. The position of the magnets relative to any of the Hall effect sensors may be used to generate an output signal based on the position of the dial. The '980 patent also describes a spring-based mechanism for enabling the dial to be moved between first and second vertical positions, wherein the springs biases the dial toward the first vertical position and downward pressure is required to move the dial toward the second vertical position. An additional magnet is included on a flexible arm carried by the switch ring. Upon movement of the dial from the first vertical position to the second vertical position, the magnet is moved in a direction toward another Hall effect sensor mounted on the printed circuit board. This Hall effect sensor produces a signal whenever the dial is depressed, which signal may be used to control the associated portable computer. The '980 patent further states that a momentary switch may be provided, such as in the center of the dial, for producing another computer control signal.

According to the '980 patent, the multiple switch rotary dial input device described therein, that generates signals from the rotation of the dial and the depression of the dial and/or a momentary switch, may be used in place of conventional mouse input devices as a mechanism for controlling and entering information into a computer. For example, the '980 patent states that the dial may be rotated to scroll through a list of items appearing on a display device of the computer, and the dial or monetary switch may be depressed to select an identified item. In the preferred embodiment, the dial cannot be depressed while it is being rotated and vice versa.

As another example, U.S. Pat. No. 5,959,611, the disclosure of which is incorporated herein by reference, describes a portable computer system including a CPU, an input interface, a display and an input device, wherein the input device comprises a rotary switch or dial and three on/off switches. The rotary switch may be a 16 position, binary coded rotary switch which outputs a four-digit gray code representing the position of the switch. As is known in the art, a gray code is a special binary encoding scheme in which adjacent numbers or positions have codes that differ in only one bit position. The on/of switches may be momentary push button switches positioned so as to surround the rotary switch.

The input interface translates the rotational movement of the rotary switch and the depressions of the on/off switches into data appropriately formatted for the CPU. Specifically, four conductors carry a first input signal produced by the rotary switch indicative of its position, and each of three separate conductors carry second input signals generated by depression of each of the on/off switches. The '611 patent states that the first input signal may be used to sequentially identify, through rotation of the dial, information appearing on the display, and the second input signals may be used to select an identified piece of information. The input interface may be implemented using a PIC microcontroller that is programmed to encode the first and second input signals into, for example, an eight bit byte transmitted to the CPU consisting of one byte for each switch depression and every turn of the rotary switch. Such an eight bit byte, according to the '611 patent, consists of six significant bits. Bits **5** and **6** represent the rotary switch turning clockwise and counterclockwise, respectively. If one of those bits is set to one, thereby indicating either a clockwise or counter-clockwise rotation, then bits **1** through **4** represent the gray code input signal. If both of those bits are set to zero, then bits **1** through **4** represent the depression of one of four possible on/off switches, only three of which are actually in use in the device described in the '611 patent. In other words, if any of bits **1** through **4** is set to one, then the corresponding switch was just depressed.

As is known in the art, particular portions or zones of a computer display showing a particular character, word or image can be selected, using a mouse or other input device, to cause the computer to perform an action. The '611 patent refers to such zones as hot spots. According to the '611 patent, a user can sequentially identify or step through hot spots provided on the display by rotating the rotary switch in a clockwise direction. Rotation of the rotary switch in a counter-clockwise direction enables the user to step through the hot spots in the reverse order. When the desired hot spot is identified, such as by being made bold or otherwise highlighted, any one of the on/off switches may be depressed to select the identified hot spot, thereby causing the computer to perform an action. Thus, the input device described in the

'611 patent may be used to input information into and control a computer much like a conventional mouse.

FIG. **42** is a reproduction of FIG. **5** of the '611 patent and is a block diagram illustrating the operation of the software that enables the input device to identify and select hot spots. In FIG. **42**, a screen is drawn or redrawn at step **6200**. Thereafter, process control proceeds to step **6200** in which the software awaits input from the user, i.e., the eight bit byte of information provided to the CPU from the input interface. When input is received from the user, step **6600** determines if a selection has been made, i.e., whether of the of on/off switches has been depressed. If none of the switches has been depressed, then the input must be rotation of the rotary switch and process control proceeds with step **6800**. At step **6800**, a determination is made as to whether the rotary switch has been rotated in a clockwise direction. If so, process control proceeds with step **7200** wherein the next hot spot becomes the active hot spot. If the rotary switch has been rotated in a counter-clockwise direction, process control proceeds with step **7000** in which the previous hot spot becomes the current hot spot. After either step **7000** or **7200**, process control returns to step **6400** to await additional user input.

If at step **6600** a selection was made, process control proceeds with step **7400** to determine if a system command had been invoked. If not, the type of hot spot is checked at step **7600**, the relevant code is executed, and the screen is redrawn at step **6200**. If, on the other hand, a system command is invoked at step **7400**, at step **7800** an execution of the next screen or previous screen, as appropriate, is performed and the appropriate screen is redrawn at step **6200**. Thereafter, process control returns to step **6400** to await additional user input. In this manner, the rotation of the rotary switch coupled with operation of the push-button switches controls the hot spots and ultimately controls the information displayed on the display and the actions taken by the computer. Those of ordinary skill in the art will recognize that the process illustrated in FIG. **42** can be implemented in software in a variety of ways.

Thus, as is known in the art and as taught by, for example, the '980 and '611 patents, dial **1220** may be used to step through or toggle between or among various input or command or control possibilities presented on LCD **1210** by selectively rotating dial **1220** in either the clockwise or counter-clockwise direction. As dial **1220** is rotated, the various input or command or control possibilities are highlighted. Highlighted items may be selected and a corresponding action commenced by pressing button **1215**, or alternatively dial **1220** itself, in which case dial **1220** acts as both a dial and a button as those terms are used herein such that the device in question would be considered to have both a dial and a button. One alternate example of dial **1220** is the knob on the side of a watch that rotates about the side external surface of the watch.

As an alternative to dial **1220**, one or more buttons, such as an up button and a down button or left and right buttons, may be used to step through or toggle between or among various input or command or possibilities presented on LCD **1210**. In this embodiment, button **1215** may still be used to select and commence a highlighted items. As a further alternative, I/O device **1200** may be provided with voice recognition software and voice commands may be used to step through or toggle between or among various input or command or possibilities presented on LCD **1210**. Voice commands may also be used to select and commence a highlighted items. As still a further alternate embodiment, voice commands in combination with voice recognition software may be used to directly enter information, such as nutrition information described below, into I/O device **1200**.

Referring to FIGS. **43**A-F, an embodiment of the present invention including I/O device **1200** is shown in which energy related data for an individual is collected or generated by I/O device **1200** and sensor device **1201** and displayed by I/O device **1200** on LCD **1210**. As seen in FIGS. **43**A-C, the energy related data may include calories consumed and calories burned by the individual over specific time periods such as a day, a week or a month. In FIG. **43**A, this data is presented in a format that provides a comparison to a predetermined goal for each value. The example shown in FIG. **43**A shows that a daily goal of 2000 calories consumed was set by the individual and that the individual has consumed 1,483 calories on the day in question, and that a daily goal of 2,400 calories burned was set by the individual and that the individual has burned 2,750 calories on the day in question. Referring to FIGS. **43**B and C, the data is presented in a format referred to as energy balance in which the amount of calories consumed by the individual is compared to the amount of calories expended or burned by the individual for daily, weekly or monthly periods. It will be appreciated that the individual may toggle between the goal based and energy balance formats just described, and among the various time periods within each, by rotating dial **1220** and, in one embodiment, also pressing button **1215**. Depending upon the rotation of dial **1220** and, in one embodiment, upon pressing of button **1215**, appropriate information is displayed sequentially on LCD **1210**. For example, in FIG. **43**A, LCD **1210** is shown displaying data in the goal based format for a daily time period. LCD **1210** may be caused to display the data in the goal based format for a weekly or monthly period by progressively rotating dial **1220** in the clockwise direction. Similarly, LCD **1210** may be caused to switch from displaying data in the goal based format shown in FIG. **43**A to displaying data in the energy balance format for the various time periods by progressively rotating dial **1220** in the counter-clockwise direction.

The calories burned data that is displayed by I/O device **1200** may, according to one embodiment of the present invention, be generated by sensor device **1201** from the physiological and/or contextual parameters it detects and thereafter transmitted to I/O device **1200** for storage, use in appropriate calculations and/or display. The calories burned data may also be generated using data that is input by the user in addition to the detected parameters. Furthermore, the caloric consumption data that is displayed by I/O device **1200** may, according to one embodiment of the present invention, be generated, preferably by I/O device **1200** but also by sensor device **1201**, from data input into I/O device **1200** by the individual relating to foods consumed (as described elsewhere herein, caloric consumption data may also be generated using various detected parameters in addition to information that is input manually). Specifically, I/O device **1200** may be provided with access to a user accessible database of foods and corresponding caloric value. Such a database may be provided as part of I/O device **1200** itself, as in the case of the preferred embodiment of the present invention, or I/O device **1200** may be able to access a database stored and maintained on a computing device located separately from the I/O device such as through short or long distance wireless or wired communications. Referring to FIG. **43**D, LCD **1210** is shown displaying an ENTER NUTRITION menu screen that may be accessible from, for example, a main menu screen presented on LCD **1210** using dial **1220** and button **1215**. When the individual eats a particular food, he or she may

enter it into I/O device **1200** for storage and/or use thereby by rotating dial **1220** until the FOOD DATABASE line of the ENTER NUTRITION menu screen shown on LCD **1210** is highlighted and thereafter pressing button **1215** to select same. Once the food database has been selected, the individual is, in this embodiment, presented with the search screen shown on LCD **1210** in FIG. **43**E. The individual may sequentially spell out the name of the food consumed by rotating dial **1220** to each letter and selecting the letter by pressing button **1215**. When the individual has finished spelling the food in question, he or she rotates dial **1220** until SEARCH is highlighted and then presses button **1215**. In response, as shown in FIG. **43**F, I/O device **1200** presents a list on LCD **1210** of foods that match the entered search information. The individual may then select the appropriate food by rotating dial **1220** and pressing button **1215**. When this is done, the corresponding caloric information may be displayed to the user on LCD **1210** and will be stored by I/O device **1200** as part of the caloric consumption data for that day. The database may include several sub-entries for each food that correspond to particular serving sizes, such as a 3 oz. slice of pie or a 6 oz. piece of chicken, and the appropriate caloric value associated therewith. As will be appreciated by one of skill in the art, these sub-entries may be presented to the user and selected using dial **1220** and button **1215** in the manner described above. Referring again to FIG. **43**D, I/O device may also be used to store a list of favorite foods that are consumed frequently. By selecting the FAVORITE FOODS line from the Enter Nutrition menu screen provided on LCD **1210** and subsequently selecting the appropriate favorite food, both done by using dial **1220** and button **1215**, an individual eliminates the need to search through the database as described above. In addition, an individual may add a custom food and associated caloric value to the food database using dial **1220** and button **1215** by selecting the ADD CUSTOM FOOD line from this Enter Nutrition menu screen provided on LCD **1210** and using a subsequently provided alpha-numeric entry screen similar to that shown in FIG. **43**E to enter the food name and caloric information. Once entered, this custom food will be accessible from the food database. As will be appreciated to those of skill in the art, the information displayed on LCD **1210** may be shown in list menu or serial menu format.

Although FIGS. **43**D-F illustrate the use of a database of food information according to one embodiment of the present invention, it will be appreciated that any database of information maybe used with I/O device **1200** without departing from the scope of the present invention. For example, the database could store a number of activities, such as walking, running or biking for a particular time period, and the caloric expenditure associated with each. In such a configuration, I/O device **1200** would enable an individual to input and track his or her caloric expenditure over a period of time. Furthermore, it will be appreciated that I/O device **1200** is not limited to receiving and displaying information relating to caloric consumption and expenditure as shown in FIGS. **43**A-F. Instead, I/O device may receive and display many different types of information from one or both of sensor device **1201** and the user, including, for example, information relating to sleep states and patterns.

It is also possible to enter nutrition information in a considerably simplified manner in any of several potential forms, including single dimensional point systems, single dimensional categorical rating systems, and multi-dimensional categorical rating systems. For a simple example of a single-dimensional point system, the user may select from a 7 point scale, where each point value corresponds to a rough approximation of the relative size of the meal in relation to the user's normal sized meal. For an example of a categorical system, the user may select from the set {tiny, small, medium, large, and super-size} when describing a meal. An example of a multi-dimensional categorical system is the grid system described below.

For each of these systems, the users are asked to score each meal (including snacks) according to the choice of scoring system. The user's classification of the meal, as identified by a classification identifier chosen by the user, is used as an input to an algorithm that estimates the caloric content of the meal. The algorithm that does this calculation may take other factors into consideration, including, but not limited to, the time of day, the day of the week, the season, whether the day is a holiday, the user's past meal habits, the raw or derived values from a body monitoring product such as sensor device **1201**, demographic information, and trends in the user's reporting of data. The algorithm may be a simple look-up table where each classification identifier is associated with a caloric amount, but can be more complicated as well.

Referring to FIG. **43**G, an alternate interface **1250** displayed on LCD **1210** for entering nutrition information into I/O device **1200** is shown which simplifies user interaction. In connection with interface **1250**, users are provided with a two-dimensional grid-based system based on grid **1255** and are asked to rate each meal, including snacks, according to a grid system based on the size of the meal or snack, shown on the horizontal axis of grid **1255**, and the estimated caloric density of the meal or snack (essentially the fat content), shown on the vertical axis of grid **1255**. The grid squares are then translated into caloric estimates (or caloric estimate ranges) using any of a variety of algorithms. In one embodiment, the grid squares correspond directly to caloric estimates via a lookup table derived from aggregate population statistics. In another, the corresponding caloric estimates are based on a weighted combination of a user's own previous data and aggregate population statistics. The user may answer a pair of questions instead of directly choosing a grid square. The pair of questions first may ask about the size of the meal, and then may ask about the caloric density.

This system of quick caloric entry has been tested and verified in both an in-house pilot study with ten subjects over several months conducted by the assignor of the present application and a brief three-day study of 41 participants. In both studies, the following method was used. For each subject, the data from all of the other subjects was used to generate caloric estimates for each grid category for each meal type. The estimates from that aggregate information were then compared to the computed caloric totals calculated from full diet diary entries. FIG. **43**I shows a scatter plot between the estimates of the caloric content based on the present invention and those computed from the full diet diary entries for one of the subjects in the in-house study, and FIG. **43**J shows the relationship between the estimates of the caloric content based on the present invention and those computed from the full diet diary entries for the three-day. The correlation between the estimates of the in-house study and the diet diary caloric totals was 0.80, and the estimates of the three-day study and the diet diary caloric totals was 0.57, without any normalization by each subject's basal metabolic rate. This data, taken with the most simple of the embodiments of the system, strongly supports the premise that diet recording using a quick entry system can result in reasonably accurate estimates of a user's daily caloric intake.

Referring to FIG. **43**H, a further alternate interface **1250** displayed on LCD **1210** for entering nutrition information into I/O device **1200** is shown which simplifies user interac-

tion. In connection with interface **1250**, users are provided with a point system based on grid **1255** and are asked to score each meal, including snacks, according to a point system based on the size of the meal (including snacks), shown on the horizontal axis of grid **1255**, and the estimated caloric density for the meal (including or snacks), shown on the vertical axis of grid **1255**. The points act as categories enabling the user to classify each meal, including any snacks, and thereby associate a caloric amount with the meal. Users may also be given a baseline size and calorie value to be associated with each point level. For example, a 1 may be set to be a meal that is the size of a fist having an estimated calorie value of 300-500 calories, a 2 may be set to be a meal that is either the size of a fist having an estimated calorie value of 500-700 calories, or the size of a fist and a half with a calorie value of 300-500 calories, and so on, with a 7 being a super-size meal that exceeds any of the provided levels. In addition, the meal score may further be weighted, by multiplying the score by a weighting factor, depending on whether it is breakfast, lunch, dinner or a snack. The user can use dial **1220**, or alternatively one or more buttons or voice commands, to toggle among the scores or points shown in grid **1255** and button **1215** to select a score or point level. Each point level has associated therewith a caloric value or amount, which may be a range of calories, that is saved for the meal in question. The associated caloric amounts may be a generic values designed to suit the public at large, or may be specific values tailored to particular individuals. It will be appreciated that, depending on the grid **1255**, the user, in selecting a point level, may actually be making two selections, one based on the horizontal axis of the grid (size of meal) and the other based on the vertical axis of the grid (caloric density of the meal). In addition, according to a particular embodiment, the I/O device **1200** is programmed to adjust its settings over time based on information that is collected. For example, if a user begins a week weighing 200 pounds and at the end of the week should weigh 197 pounds based on the input nutrition and other information, but instead actually weighs 202 pounds, the problem could be that what the user thinks is a 1 point meal is actually a 2 point meal. To account for this problem, I/O device **1200** can, over time learn and adjust or calibrate its settings and how it does its calculations to personalize itself for the user by, for example, increasing the number of calories associated with a user's classification. This learning process thus increases the accuracy of I/O device **1200**. One method for implementing this automatic calibration is to use Bayesian statistics and use an initial prior for the caloric value of the classifications based on aggregate user statistics and then to train it for the given user over time as data is entered into the system. As another embodiment, the system can allow the wearer to input both simplified dietary information (such as the grids shown in FIGS. **43**G and H) and full dietary information about the meals that are eaten. The caloric amounts from the full dietary information can easily be calculated and used to train the caloric estimates for each category. In addition, as I/O device learns, adjusts or calibrates, it may also modify the goals of the user and the program he or she is following. As still a further alternative, I/O device **1200** can take the information it has accumulated over time and provide information automatically for a user. For example, if a user forgets to enter a lunch value, I/O device may be programmed to enter the average of a predetermined number of, such as the last ten or even all, lunch values for the missing lunch. This may be done automatically, or only after prompting the user for verification of the values and authorization to do so. Alternatively, I/O device may fill in such gaps by matching that days routine to a previous day's routine, and using the lunch or other missing value from that day, thereby taking advantage of the fact that people tend to be creatures of habit.

Another aspect of the invention is that of automatic adaptation of feedback given to the user by sensor device **1201** or I/O device **1200**. The feedback given to the user in this invention (e.g. "you might want to run an extra 10 minutes today") can be given exactly when appropriate by taking advantage of the system's ability to detect contexts and to auto-journal as describe elsewhere herein. For example, feedback for eating might be best given just before a meal, and exercise feedback might be best given right when the user is most likely to exercise. Furthermore, if the system has detected that the user has already jogged that day, then an alternate suggestion can be given. Finally, the user's response to feedback can be utilized to further adapt the choice of the given feedback. If the user never takes exercise suggestions, advice can focus instead on nutrition. If the user tends to respond better to feedback given in the morning, more feedback can be given in the morning. The method of noticing their response would be measured by adherence to the suggestions and by successful maintenance of a healthy eating balance, as well as by noticing the absence of "violent" responses such as hitting a button that turns feed back off, turning the device off, or abruptly taking off the device.

There are three main ways in which sensor device **1201** can calibrate itself to the user. First, the device can use an initial training or calibration period where the user performs some additional tasks to train the system. For example, the user can enter in a full diet diary in addition to the quick estimates, allowing the system to learn the user's own definitions for each meal classification. The user might additionally perform a program of activities (such as walking around the block for at least 10 minutes or resting for 20 minutes) in order to calibrate a subsystem for obtaining energy expenditure that may be provided in sensor device **1201** and obtain personalized parameters for the individual that are then used in later use of the system. The subsystem for obtaining energy expenditure may also be calibrated against gold standard data from, for example, a VO2 machine. The second method involves repeating the training procedures (or a subset thereof) every so often. One example of this would be for a glucose level prediction algorithm where, each week (for example), the user performs a finger-prick glucose test to calibrate the prediction system. The third method involved doing continual training while the user is using the system including sensor device **1201**. For example, the system described above that utilizes discrepancies in predicted weights between the system's prediction and that reported by a scale to adjust the estimated caloric amounts for each category is an example of this type of training.

According to a further aspect of the present invention, the user can be queried to answer questions that the sensor device **1201** or I/O device **1200** can not figure out for itself, or about which it has too much uncertainty. For example, the sensor device **1201** or I/O device **1200** may have enough information to ask the user only a single question about breakfast, but may require more information for a morning snack that the user doesn't have every day. The system can ask the questions specifically when the range of its uncertainty about a quantity is too large, and can thus minimize the input required from the user.

According to a further aspect of the present invention, I/O device **1200**, sensor device **1201** and a computing device such as a PC or a PDA may be used together as a weight management system. Specifically, I/O device **1200**, such as a watch like device, is used to input and track information relating to calories consumed by an individual and sensor device **1201** is

used to measure calories burned or expended by the individual. The caloric expenditure information measured by sensor device **1201** is transmitted, by wire or wirelessly, to I/O device **1200**. I/O device **1200** then, based on the caloric consumption and caloric expenditure information, displays to the individual a current rate of weight loss or gain and/or an energy balance value on LCD **1210**. According to a specific embodiment, sensor device **1201** assumes that the individual is inactive if sensor device **1201** is not being worn, and uses the individual's resting metabolic rate to calculate caloric expenditure during such period.

In one embodiment, the individual, for each meal, including snacks, rather than inputting a specific food or foods selected from a database as described in connection with FIGS. **43**D-**43**F, merely classifies each meal according to an indication of the estimated size of the meal (in terms of an estimated caloric value) using classifiers such as small (S), medium (M), large (L) or extra large (XL). Each classifier is assigned a corresponding caloric amount, and I/O device **1200** stores for the meal the caloric amount corresponding to the entered classifier. To enable the individual to enter this information, I/O device **1200** first displays on LCD **1210** a list of each meal possibility, i.e., breakfast, lunch, dinner or snack. The individual is able to toggle among these selections using dial **1220** or one or more buttons, and select one using button **1215**. Once the meal classification is selected, I/O device **1200** displays on LCD **1210** a list of the classifiers such as S, M, L, and XL. Again, the individual is able to toggle among these items using dial **1220** or one or more buttons, and select one using button **1215**. When one of these classifiers is selected, the corresponding caloric amount is saved for the meal in question and is used to generate the caloric consumption information used by I/O device **1200**. I/O device **1200** may be programmed to prompt the individual to enter meal information if the individual has not done so by a certain time or times each day.

In a preferred embodiment, the computing device is provided with weight management software that enables the individual to input information relating to foods actually eaten during each meal using a database such as that shown in FIGS. **43**D through F. Based on the information that is input, a specific caloric amount is assigned to each meal entry. The individual is also able to enter information relating to weight goals, such as how much weight the individual wants to lose and over what time period the individual wants to lose the weight. Based on this information, a target weight loss rate may be established for achieving the input goal. In this embodiment, the individual, while entering information into I/O device **1200** using the S, M, L, and XL classifier system, also enters information into the computing device using the weight management software for a predetermined time period. Sensor device **1201** is in electronic communication, by wire or wirelessly, with the computing device to enable information to be transmitted from the computing device to sensor device **1201**. Specifically, the information that is transmitted from the computing device includes information relating to the weight goals, namely target weight loss amount, time frame and rate, and information relating to the caloric amount associated with each meal eaten by the individual based on the food items input into the computing device. Sensor device **1201** may then transmit the information to I/O device **1200**. Alternatively, I/O device **1201** maybe in electronic communication, by wire or wirelessly, with the computing device so that the information may be transmitted directly to the I/O device **1200**. According to an aspect of the present invention, I/O device **1200** compares the caloric amounts entered for each meal using the S, M, L, and XL classifiers with the caloric amounts entered for each meal using the computing device and database of food information over the predetermined time period, and make adjustments to the caloric amounts that are associated with each of the classifiers so that they more accurately reflect calories actually consumed. Thus, in this specific embodiment, the individual enters nutrition information both using I/O device **1200** and the computing and database for a specified period of time, for example two weeks, after which the entry system on I/O device **1200** is calibrated or adjusted to bring the individual's perception of what should be classified as S, M, L, or XL based on calories in line with more accurate caloric data. After this initial period, the individual only enters nutrition information using I/O device **1200** and the S, M, L, and XL classifiers, and caloric data is recorded for each meal depending on how the meal is classified.

In a preferred embodiment, I/O device **1200** is programmed to provide suggestions to the individual, in the form of information displayed on LCD **1210**, on how to achieve the individual's weight goals. These suggestions are based on the caloric expenditure and caloric consumption data that is logged by I/O device **1200**. For example, if the individual is currently below the target weight loss rate of, for example, 1 pound per week, I/O device **1200** may display a message that instructs the individual to walk for 55 minutes to bring the current weight loss rate up to 1 pound per week. The suggestions may be of many types, including, without limitation, actions for the individual to take, explanations for why the individual is experiencing certain things such as inability to lose weight, feedback regarding the individual progress toward goals, and/or relationships between or among the parameters being measured and/or reported by sensor device **1201** and/or I/O device **1200**. The suggestions may self adjust or learn based on the individual's performance toward goals. The substance of the suggestions may come from a number of sources, such as sensor device **1201** and/or I/O device **1200** or a third party source, including a person such as a trainer or health care provider, a computing device such as a treadmill, or a remote computer, such as an Internet source.

As noted above, in one embodiment, I/O device **1200** displays a current weight loss or gain rate on display **1200**. The current weight loss or gain rate that is displayed on I/O device **1200** may be a daily, weekly or monthly rate, or may be a rate calculated based on the total time remaining until the weight loss target date. I/O device **1200** may be programmed to selectively display each of these rates depending on the desires of the individual, such as by using dial **1220** or one or more buttons to toggle among these various options.

FIG. **44** is a block diagram showing the components attached or otherwise coupled to a printed circuit board (not shown) housed within housing **1205** of an embodiment of I/O device **1200**. Included among these components is processing unit **1300**, which may be a microprocessor, a microcontroller, or any other processing device that can be adapted to perform the functionality described herein. Connected to processing unit **1300** are non-volatile data storage device **1305**, such as a flash memory, chip for storing information input and/or transmitted to I/O device **1200**, and non-volatile program storage device **1310**, such as a FLASH ROM chip, for storing the programs required for operation of I/O device **1200**. Also provided is reference database **1315** which may, as described in connection with FIGS. **43**D-F, be used to provide user accessible and selectable information for use by I/O device **1200** or sensor device **1201**. As is known in the art, reference database **1315** includes a software component for organizing and accessing data, and a memory component for physically storing data. Also connected to processing unit **1300** are one

or both of wireless link **1320**, such as an RF transceiver, connected to antenna **1325**, and hardware interface **1330**, such as a USB port, connected to connector **1335**. These components are used to implement communications connection **1230** shown in FIG. **40**, and may also be used to communicate electronically with a wide variety of devices, such as a treadmill, a weight scale or a transceiving device adapted to act as a data collection and storage hub. Driver **1350** and ringer/buzzer **1345** may also be connected to processing unit **1300** to provide audible and/or tactile feedback to a user.

LCD **1210** and backlight **1350** for LCD **1210** are connected to processing unit **1300** through appropriate well known drivers **1355**. Battery **1360**, which may be disposable or rechargeable, provides power for I/O device **1200** and is connected to processing unit **1300** through voltage regulator **1365**. Oscillator **1370** provides the system clock to processing unit **1300**, and reset circuit **1375** enables processing unit **1300** to be reset to a standard initial setting. Finally, button **1215** and dial **1220** are electronically connected to processing unit **1300** according to any known means, such as those described in the '980 and '619 patents, which would enable button **1215** and dial **1220** to provide input or command or control signals to processing unit **1300**.

According to an alternate embodiment of the present invention, I/O device **1200** may be adapted to operate on its own, without being in communication with sensor device **1201**. In this embodiment, a user may enter information into I/O device **1200** as described herein and may use I/O device to store and track such information over time. For example, reference database **1315** may store food and activity related information and a user may enter caloric consumption and caloric expenditure or burn information as described in connection with FIGS. **43**D-F. The entered information would in this embodiment be stored in data storage device **1305**, and processing unit **1300** would be programmed to generate and display the information shown in FIGS. **43**A-C. In such an embodiment, RF link **1320**, antenna **1325**, hardware interface **1330** and connector **1335** would not be required since communication with sensor device **1201** is not necessary, but may be included as optional enhancements. For further added functionality, one or more sensors **1400**, such as those described in connection with sensor device **400**, stand alone sensor device **700** and sensor device **800**, maybe, as shown in FIG. **45**, attached to, supported by or otherwise coupled to I/O device **1200**, enabling it to collect data indicative of physiological and/or contextual parameters. In one specific embodiment, sensor **1400** may be a heart rate sensor in the form of a chest strap. In another specific embodiment, sensor **1400** may be a non-ECG heart parameter sensor such as that described in the '005 patent. Sensor **1400** in this embodiment may be used in connection with heart rate information collected by sensor device **1201**, such as ECG information obtained from the upper arm, to make pulse transit time measurements, which, as is known in the art, are an indication of cardiovascular health and have a relationship to blood pressure. Such pulse transit time measurements may also be calibrated against measurement using a traditional blood pressure cuff for increased accuracy. This collected data, other data entered by the user, and/or one or both of derived data and analytical status data generated therefrom, may be displayed to the user using LCD **1210** or some other output/feedback device such as a screen on a treadmill, headphones worn by the user, or an earpiece such as those worn by first responders.

According to a further alternate embodiment of the present invention, I/O device **1200** may act as a hub or terminal for collection and, in a specific embodiment, processing data received from a variety of sources. For example, referring to FIG. **46**, I/O device **1200** may be used as a hub or terminal in health club **1500** to collect and, in a specific embodiment, process data relating to a user's activities in health club **1500** received from a variety of devices located in health club **1500**. In this embodiment, I/O device **1200** may take the form of a watch-like device that is worn by the user on his or her wrist, clipped to the clothing of the user, or otherwise carried by the user. Referring to FIG. **46**, I/O device **1200** is in electronic communication with exercise equipment **1505** through communications connection **1230**, which may be a wired connection, but which preferably is a wireless connection. Exercise equipment **1505** may be any type of exercise equipment, such as a treadmill or exercise bike, that possesses the ability to generate data relating to the exercise being done and transmit the data to I/O device **1200** over communications connection **1230**. I/O device **1200** is thus able to collect and store data relating to exercise activity such as the calories expended during a workout or the duration of the workout. In addition, I/O device **1200** may be programmed to store settings and/or exercise programs for each of the various types of exercise equipment **1505** such that the settings and/or exercise programs may be transmitted over communications connection **1230** to exercise equipment **1505** prior to commencement of a workout for controlling it during the workout. As a further alternative, I/O device **1200** may be provided with an artificial intelligence based program or algorithm that modifies, based on the information collected by I/O device **1200**, the exercise program being followed by the user. As still a further alternative, the settings used by and/or exercise programs followed by a user can be set or modified remotely by a trainer or similar individual and be communicated to I/O device from computing device **1515** or through computing device **1515** from a remote source over the Internet, described in detail below. It will be appreciated that I/O device **1200**, preferably being portable, is able to collect and store data from a number of different pieces of exercise equipment **1505** that are used by the user as he or she moves around health club **1500**, or, as described elsewhere herein, while the user is outside of health club **1500**, for example at home or while traveling.

As seen in FIG. **46**, I/O device **1200** may also be in electronic communication with sensor device **1201** through communications connection **1230**, which preferably is a wireless connection, but which may be a wired connection such as with a cradle. Thus, as described in greater detail in connection with FIGS. **41** through **45**, I/O device **1200** is able to collect and store data relating to the physiological parameters of the user before, during and after any exercise activity. For low bandwidth applications, methods are known for transmitting electronic signals through the body. Thus, if both I/O device **1200** and sensor device **1201** are in contact with the user's skin, it may be possible to transmit data using the user's body. Similarly, data may also be transmitted in this manner to other devices by the user by touching them. According to an alternate embodiment of the present invention, sensor device **1201** acts as the hub or terminal for collection and, in a specific embodiment, processing data received from a variety of sources, and as such, would replace I/O device **1200** in FIG. **46**.

According to one aspect of the present invention, I/O device **1200** stores a program or regimen preferably including a set of goals that may be established by set by the user or a third party such as a trainer or care giver. I/O device **1200** communicates with and is programmed to control an apparatus in the environment such as a treadmill or weight machine. Specifically, I/O device **1200** is able to communicate instructions to the apparatus for setting the apparatus up for the

desired interaction/result, such as choosing treadmill programs or setting or weight machine weight amounts. While user interacts with the apparatus, I/O device **1200**, being in communication with the apparatus, tracks the user's performance, preferably with respect to the program or regimen including goals. The tracking may be based on information received from the apparatus, such as repetitions on a weight machine or distances run on or heart rate measured by a treadmill, and may also be based on parameters being measured by sensor device **1201** or I/O device **1200** such as energy expenditure. I/O device **1200** may also adjust/control the apparatus the user is interacting with to maximize the performance toward the goal, such as by adjusting the treadmill angle and/or resistance to decrease heart rate or energy expenditure rate of the individual. Such adjustment may be important if, for example, the individual is a CVD patient that needs to watch how much they exert themselves. In addition, after the use of the apparatus is complete, I/O device **1200** can adjust the program or regimen so that the next time the user uses the apparatus, the program or regimen will have been adjusted to comply with the progress or lack of progress the person has made. This adjustment could also include free-living exercise and other information that gets collected between periods of use of the apparatus. For example, if the person walked the rest of the week according to their program or regimen, the next time they come to use the apparatus, instead of using the same now outdated program/regimen, the program/regimen is adjusted to meet the user's new capabilities. The principle just described could also apply to interaction with other types of equipment other than exercise equipment, such as medication dispensers, CPAP machines used in sleep therapy, or even a thermostat in the house.

Most health clubs include various devices for providing entertainment to users while they are exercising. For example, a health club may include a number of television monitors, with each monitor providing a different channel of programming. Users are able to listen to the audio portions accompanying the programming while exercising by plugging headphones into an access device provided adjacent to each piece of exercise equipment, and may use the access device to select among the audio portions of the various programming channels. Referring to FIG. **46**, I/O device **1200** may be in electronic communication through communications connection **1230** with entertainment equipment **1510**, which comprises an access device or similar equipment as just described provided adjacent to exercise equipment **1505** that allows a user to select among various entertainment options. In addition, users may be able to choose to view and or listen to a prescribed program such as a health education program or a motivational program. I/O device **1200** and entertainment equipment **1510** may be adapted to enable I/O device **1200** to collect from entertainment equipment **1510** and store data relating to the various entertainment or other programming options selected by the user.

In addition, health club **1500** includes computing device **1515**, which may be a PC or a server computer or the like. I/O device **1200** is adapted to be in electronic communication with computing device **1515** through communications connection **1230** to enable the data collected, stored and, in a specific embodiment, processed by I/O device **1200** to be transmitted to computing device **1515**. For example, a wireless interface device in electronic communication with computing device **1515** could be placed near the front desk of health club **1500**. As a user exits health club **1500**, he or she could place I/O device **1200** in proximity with the wireless internet device and, either automatically or after a further step such as pressing a button, the data collected, stored and, in a specific embodiment, processed by I/O device **1200** while the user was in health club **1500** would be downloaded from I/O device **1200** and transmitted to computing device **1515**. The data transmitted to computing device **1515** may also include data manually entered into I/O device **1200**, such as caloric consumption data. As an alternative, the wireless interface device could be replaced by a docking station or a jack device that requires I/O device to be physically coupled thereto to establish an electronic communications path.

As seen in FIG. **46**, computing device **1515** is in electronic communication with remote server **1520** through the Internet or a similar computer network. Remote server **1520** aggregates data transmitted from computing device **1515** for a number of users and, according to a specific embodiment, from similar devices located at other health clubs. In an alternate embodiment, data may be transmitted directly from I/O device **1200** to remote server **1520**, rather than through computing device **1515**, by, for example a long range wireless communications protocol such a those used with cell phones or 2-way pagers. Remote server **1520** may include a web server that makes the collected data, such as physiological, exercise activity, and/or caloric consumption data, available to users over the Internet through computing device **1525** under the control of the user, such as a PC, cell phone or PDA. The data may, in one embodiment, be presented to users in a form similar to that described in connection with FIG. **5** through **11**. In addition, remote server **1520** may be used to segregate the data collected from entertainment equipment **1510** and, in a specific embodiment, demographic information about the users associated with the data. The segregated data may be used to track the level of use of each programming channel and provide ratings, similar to Nielsen ratings, for each programming channel.

Furthermore, I/O device **1200** may also be used to collect data from devices located outside of health club **1500** that have capabilities and functionality that are similar to exercise equipment **1505** or entertainment equipment **1510**. For example, a user that normally exercises at health club **1500** may be out of town for a period of time and, while out of town, may exercise at another facility. I/O device **1200** may be used to collect data from exercise and/or entertainment equipment used at the other facility, provided such equipment has capabilities and functionality similar to that of exercise equipment **1505** and entertainment equipment **1510**. I/O device **1200** may also be used to collect data when a user is exercising or watching or listening to some sort of programming, as described herein, at home using compatible equipment. In addition, I/O device **1200** can collect relevant information while the user is not at health club **1500** through ways other than from compatible equipment. For example, if a user takes a walk at home, I/O device **1200** could collect data relating to the walk from sensor device **1201** or from manual entry. When the user returns to health club **1500**, he or she can transmit the data collected while he or she was away or while exercising or engaging in other activities at home to computing device **1515**, thereby eliminating gaps in data collection that otherwise would have occurred while the user was away from health club **1500**. By eliminating such gaps, a program being followed by the user or goals set by the user can be more accurately monitored and modified, for example by a personal trainer or though an artificial intelligence program or algorithm employed by I/O device **1200**.

In one embodiment, I/O device **1200** would store information about the user including demographic information, identification information, musical preferences, and the type of program they are on, such as rehab, cardio, or fat burning. I/O device **1200** may also collect information about the specific

room it was in while the person interacted in the club, when they entered and left the room and what machine they used. In one specific embodiment, a wireless system may be utilized in which I/O device **1200** could understand it's own location in the facility through means of triangulating off two other RF transceivers in the facility.

According to yet another aspect of the present invention, instead of a space or facility like a health club requiring all the infrastructure for all it's machines to be networked with one another, either wired or wirelessly, and with a central computer to collect information about and control the machines, people can take I/O device **1200** with them as they interact with the space and use it to communicate with the equipment using local (not long distance wireless, or wires), low power communication methods, so when they use equipment such as a treadmill, I/O device **1200** tracks the machine they were on, the use, how they performed, etc. I/O device **1200** may also select entertainment programs they want to watch and/or listen to. At the end of the session in the space or facility, the information can be downloaded to a specified site such as the central computer of the facility and/or a remote server. Thus, the space or facility avoided the need to establish a specific and costly infrastructure to connect up every piece of equipment in the facility. I/O device acts, instead, as an ad-hoc infrastructure as needed.

According to one embodiment of the present invention, sensor device **1201**, which may be any one of sensor device **400** shown in FIGS. **12-17**, stand alone sensor device **700** shown in FIG. **21**, or sensor device **800** shown in FIGS. **22-26**, includes a plurality of physiological and/or contextual sensors. For example, one particular embodiment of sensor device **400**, stand alone sensor device **700**, or sensor device **800** includes a 2-axis accelerometer, a heat flux sensor, a GSR sensor, a skin temperature sensor, a near-body ambient temperature sensor, and a receiver for receiving heart rate data from a heart rate sensor on, for example, a chest strap being worn by the user.

One aspect of the present invention relates to a sophisticated algorithm development process for creating a wide range of algorithms for generating information relating to a variety of variables from the data received from the plurality of physiological and/or contextual sensors on sensor device **1201**. Such variables may include, without limitation, energy expenditure, including resting, active and total values, daily caloric intake, sleep states, including in bed, sleep onset, sleep interruptions, wake, and out of bed, and activity states, including exercising, sitting, traveling in a motor vehicle, and lying down, and the algorithms for generating values for such variables may be based on data from, for example, the 2-axis accelerometer, the heat flux sensor, the GSR sensor, the skin temperature sensor, the near-body ambient temperature sensor, and the heart rate sensor in the embodiment described above.

Note that there are several types of algorithms that can be computed. For example, and without limitation, these include algorithms for predicting user characteristics, continual measurements, durative contexts, instantaneous events, and cumulative conditions. User characteristics include permanent and semi-permanent parameters of the wearer, including aspects such as weight, height, and wearer identity. An example of a continual measurement is energy expenditure, which constantly measures, for example on a minute by minute basis, the number of calories of energy expended by the wearer. Durative contexts are behaviors that last some period of time, such as sleeping, driving a car, or jogging. Instantaneous events are those that occur at a fixed or over a very short time period, such as a heart attack or falling down. Cumulative conditions are those where the person's condition can be deduced from their behavior over some previous period of time. For example, if a person hasn't slept in 36 hours and hasn't eaten in 10 hours, it is likely that they are fatigued. Table 3 below shows numerous examples of specific personal characteristics, continual measurements, durative measurements, instantaneous events, and cumulative conditions.

TABLE 3

personal characteristics	age, sex, weight, gender, athletic ability, conditioning, disease, height, susceptibility to disease, activity level, individual detection, handedness, metabolic rate, body composition
continual measurements	mood, beat-to-beat variability of heart beats, respiration, energy expenditure, blood glucose levels, level of ketosis, heart rate, stress levels, fatigue levels, alertness levels, blood pressure, readiness, strength, endurance, amenability to interaction, steps per time period, stillness level, body position and orientation, cleanliness, mood or affect, approachability, caloric intake, TEF, XEF, 'in the zone'-ness, active energy expenditure, carbohydrate intake, fat intake, protein intake, hydration levels, truthfulness, sleep quality, sleep state, consciousness level, effects of medication, dosage prediction, water intake, alcohol intake, dizziness, pain, comfort, remaining processing power for new stimuli, proper use of the armband, interest in a topic, relative exertion, location, blood-alcohol level
durative measurements	exercise, sleep, lying down, sitting, standing, ambulation, running, walking, biking, stationary biking, road biking, lifting weights, aerobic exercise, anaerobic exercise, strength-building exercise, mind-centering activity, periods of intense emotion, relaxing, watching TV, sedentary, REM detector, eating, in-the-zone, interruptible, general activity detection, sleep stage, heat stress, heat stroke, amenable to teaching/learning, bipolar decompensation, abnormal events (in heart signal, in activity level, measured by the user, etc), startle level, highway driving or riding in a car, airplane travel, helicopter travel, boredom events, sport detection (football, baseball, soccer, etc), studying, reading, intoxication, effect of a drug
instantaneous events	falling, heart attack, seizure, sleep arousal events, PVCs, blood sugar abnormality, acute stress or disorientation, emergency, heart arrhythmia, shock, vomiting, rapid blood loss, taking medication, swallowing
cumulative conditions	Alzheimer's, weakness or increased likelihood of falling, drowsiness, fatigue, existence of ketosis, ovulation, pregnancy, disease, illness, fever, edema, anemia, having the flu, hypertension, mental disorders, acute dehydration, hypothermia, being-in-the-zone

It will be appreciated that the present invention may be utilized in a method for doing automatic journaling of a wearer's physiological and contextual states. The system can automatically produce a journal of what activities the user was engaged in, what events occurred, how the user's physiological state changed over time, and when the user experienced or was likely to experience certain conditions. For example, the system can produce a record of when the user exercised, drove a car, slept, was in danger of heat stress, or ate, in addition to recording the user's hydration level, energy expenditure level, sleep levels, and alertness levels throughout a day.

According to the algorithm development process, linear or non-linear mathematical models or algorithms are constructed that map the data from the plurality of sensors to a

desired variable. The process consists of several steps. First, data is collected by subjects wearing sensor device **1201** who are put into situations as close to real world situations as possible (with respect to the parameters being measured), such that the subjects are not endangered and so that the variable that the proposed algorithm is to predict can, at the same time, be reliably measured using highly accurate medical grade lab equipment. This first step provides the following two sets of data that are then used as inputs to the algorithm development process: (i) the raw data from sensor device **1201**, and (ii) the data consisting of the gold-standard labels measured with the more accurate lab equipment. For cases in which the variable that the proposed algorithm is to predict relates to context detection, such as traveling in a motor vehicle, the gold-standard data is provided by the subjects themselves, such as through information input manually into sensor device **1201**, a PC, or otherwise manually recorded. The collected data, i.e., both the raw data and the corresponding gold standard label data, is then organized into a database and is split into training and test sets.

Next, using the data in the training set, a mathematical model is built that relates the raw data to the corresponding gold standard labeled data. Specifically, a variety of machine learning techniques are used to generate two types of algorithms: 1) algorithms known as feature detectors that produce a result that is highly correlated with the lab-measured level (e.g. VO2 level information from a metabolic cart, douglas bag, or doubly labeled water), and 2) algorithms known as context detectors that predict various contexts (e.g., running, exercising, lying down, sleeping, driving) useful for the overall algorithm. A number of well known machine learning techniques may be used in this step, including artificial neural nets, decision trees, memory-based methods, boosting, attribute selection through cross-validation, and stochastic search methods such as simulated annealing and evolutionary computation. After a suitable set of feature and context detectors are found, several well known machine learning methods are used to cross-validate the models using the training data and increase the quality of the models of the data. Techniques used in this phase include, but are not limited to, multilinear regression, locally weighted regression, decision trees, artificial neural networks, stochastic search methods, support vector machines, and model trees.

At this stage, the models make predictions on, for example, a minute by minute basis. Inter-minute effects are next taken into account by creating an overall model that integrates the minute by minute predictions. A well known or custom windowing and threshold optimization tool may be used in this step to take advantage of the temporal continuity of the data. Finally, the model's performance can be evaluated on the test set, which has not yet been used in the creation of the algorithm. Performance of the model on the test set is thus a good estimate of the algorithm's expected performance on other unseen data. Finally, the algorithm may undergo live testing on new data for further validation.

Further examples of the types of non-linear functions and/or machine learning method that may be used in the present invention include the following: conditionals, case statements, logical processing, probabilistic or logical inference, neural network processing, kernel based methods, memory-based lookup (kNN, SOMs), decision lists, decision-tree prediction, support vector machine prediction, clustering, boosted methods, cascade-correlation, Boltzmann classifier, regression trees, case-based reasoning, Gaussians, Bayes nets, dynamic Bayesian networks, HMMs, Kalman filters, Gaussian processes, algorithmic predictors (e.g. learned by evolutionary computation or other program synthesis tools).

Although one can view an algorithm as taking raw sensor values or signals as input, performing computation, and then producing a desired output, it is useful in one preferred embodiment to view the algorithm as a series of derivations that are applied to the raw sensor values. Each derivation produces a signal referred to as a derived channel. The raw sensor values or signals are also referred to as channels, specifically raw channels rather than derived channels. These derivations, also referred to as functions, can be simple or complex but are applied in a predetermined order on the raw values and, possibly, on already existing derived channels. The first derivation must, of course, only take as input raw sensor signals, but subsequent derivations can take as input previously derived channels. Note that one can easily determine, from the order of application of derivations, the particular channels utilized to derive a given derived channel. Also note that inputs that a user provides on an I/O device or in some fashion can also be included as raw signals which can be used by the algorithms. For example, the category chosen to describe a meal can be used by a derivation that computes the caloric estimate for the meal. In one embodiment, the raw signals are first summarized into channels that are sufficient for later derivations and can be efficiently stored. These channels include derivations such as summation, summation of differences, and averages. Note that although summarizing the high-rate data into compressed channels is useful both for compression and for storing useful features, it may be useful to store some or all segments of high rate data as well, depending on the exact details of the application. In one embodiment, these summary channels are then calibrated to take minor measurable differences in manufacturing into account and to result in values in the appropriate scale and in the correct units. For example, if, during the manufacturing process, a particular temperature sensor was determined to have a slight offset, this offset can be applied, resulting in a derived channel expressing temperature in degrees Celsius.

For purposes of this description, a derivation or function is linear if it is expressed as a weighted combination of its inputs together with some offset. For example, if FOO and BAR are two raw or derived channels, then all derivations of the form A*FOO+B*BAR+C, where A, B, and C are constants, is a linear derivation. A derivation is non-linear with respect to its inputs if it is not expressed as a weighted sum of the inputs with a constant offset. An example of a nonlinear derivation is as follows: if (FOO>7) then return BAR*9, else return (BAR*3.5+912). A channel is linearly derived if all derivations involved in computing it are linear, and a channel is nonlinearly derived if any of the derivations used in creating it are nonlinear. A channel nonlinearly mediates a derivation if changes in the value of the channel change the computation performed in the derivation, keeping all other inputs constant. According to a preferred embodiment of the present invention, the algorithms that are developed using this process will have the format shown conceptually in FIG. **47**. Specifically, the algorithm will take as inputs the channels derived from the sensor data collected by the sensor device from the various sensors and demographic information for the individual as shown in box **1600**. The algorithm includes at least one context detector **1605** that produces a weight, shown as W_1 through W_N, expressing the probability that a given portion of collected data, such as is collected over a minute, was collected while the wearer was in each of several possible contexts. Such contexts may include whether the individual was at rest or active. In addition, for each context, a regression algorithm **1610** is provided where a continuous prediction is computed taking raw or derived channels as input. The individual regressions can be any of a variety of regression equa-

tions or methods, including, for example, multivariate linear or polynomial regression, memory based methods, support vector machine regression, neural networks, Gaussian processes, arbitrary procedural functions, etc. Each regression is an estimate of the output of the parameter of interest in the algorithm, for example energy expenditure. Finally, the outputs of each regression algorithm **1610** for each context, shown as A_1 through A_N, and the weights W_1 through W_N are combined in a post-processor **1615** which outputs the parameter of interest being measured or predicted by the algorithm, shown in box **1620**. In general, the post-processor **1615** can consist of any of many methods for combining the separate contextual predictions, including committee methods, boosting, voting methods, consistency checking, or context based recombination.

Referring to FIG. **48**, an example algorithm for measuring energy expenditure of an individual is shown conceptually. This example algorithm may be run on sensor device **1201** having at least an accelerometer, a heat flux sensor and a GSR sensor, or I/O **1200** that receives data from such a sensor device. In this example algorithm, the raw data from the sensors is calibrated and numerous values based thereon, i.e., derived channels, are created. In particular, the following derived channels, shown at **1600** in FIG. **48**, are computed from the raw signals and the demographic information: (1) longitudinal accelerometer average (LAVE), based on the accelerometer data; (2) transverse accelerometer sum of average differences (TSAD), based on the accelerometer data; (3) heat flux high gain average variance (HFvar), based on heat flux sensor data; (4) vector sum of transverse and longitudinal accelerometer sum of absolute differences or SADs (VSAD), based on the accelerometer data; (5) galvanic skin response low gain (GSR), based on the GSR data; and (6) Basal Metabolic Rate (BMR), based on demographic information. Context detector **1605** consists of a naive Bayesian classifier that predicts whether the wearer is active or resting using the LAVE, TSAD, and HFvar derived channels. The output is a probabilistic weight (W_1 and W_2 for the two contexts rest and active). For the rest context, the regression algorithm **1610** is a linear regression combining channels derived from the accelerometer, the heat flux sensor, the user's demographic data, and the galvanic skin response sensor. The equation, obtained through the algorithm design process, is $A*VSAD+B*HFvar+C*GSR+D*BMR+E$, where A, B, C, D and E are constants. The regression algorithm **1610** for the active context is the same, except that the constants are different. The post-processor **1615** for this example is to add together the weighted results of each contextual regression. If A_1 is the result of the rest regression and A_2 is the result of the active regression, then the combination is just $W_1*A_1+W_2*A_2$, which is energy expenditure shown at **1620**. In another example, a derived channel that calculates whether the wearer is motoring (driving in a car) at the time period in question might also be input into the post-processor **1615**. The process by which this derived motoring channel is computed is algorithm **3**. The post-processor **1615** in this case might then enforce a constraint that when the wearer is predicted to be driving by algorithm **3**, the energy expenditure is limited for that time period to a value equal to some factor (e.g. 1.3) times their minute by minute basal metabolic rate.

This algorithm development process may be used to create algorithms to enable sensor device **1201** to detect and measure various parameters, including, without limitation, the following: (i) when an individual is suffering from duress, including states of unconsciousness, fatigue, shock, drowsiness, heat stress and dehydration; and (ii) an individual's state of readiness, health and/or metabolic status, such as in a military environment, including states of dehydration, undernourishment and lack of sleep. In addition, algorithms maybe developed for other purposes, such as filtering, signal clean-up and noise cancellation for signals measured by a sensor device as described herein. As will be appreciated, the actual algorithm or function that is developed using this method will be highly dependent on the specifics of the sensor device used, such as the specific sensors and placement thereof and the overall structure and geometry of the senor device. Thus, an algorithm developed with one sensor device will not work as well, if at all, on sensor devices that are not substantially structurally identical to the sensor device used to create the algorithm.

Another aspect of the present invention relates to the ability of the developed algorithms to handle various kinds of uncertainty. Data uncertainty refers to sensor noise and possible sensor failures. Data uncertainty is when one cannot fully trust the data. Under such conditions, for example, if a sensor, for example an accelerometer, fails, the system might conclude that the wearer is sleeping or resting or that no motion is taking place. Under such conditions it is very hard to conclude if the data is bad or if the model that is predicting and making the conclusion is wrong. When an application involves both model and data uncertainties, it is very important to identify the relative magnitudes of the uncertainties associated with data and the model. An intelligent system would notice that the sensor seems to be producing erroneous data and would either switch to alternate algorithms or would, in some cases, be able to fill the gaps intelligently before making any predictions. Determining when sensors have failed and when data channels are no longer reliable is a non-trivial task because a failed sensor can sometimes result in readings that may seem consistent with some of the other sensors and the data can also fall within the normal operating range of the sensor.

Clinical uncertainty refers to the fact that different sensors might indicate seemingly contradictory conclusions. Clinical uncertainty is when one cannot be sure of the conclusion that is drawn from the data. For example, the accelerometers might indicate that the wearer is motionless (leading toward a conclusion of "resting"), the galvanic skin response sensor might provide a very high response (leading toward "active"), and the heat flow sensor might indicate that the wearer is still dispersing substantial heat (leading toward "active"). How should these differing factors be assessed? An inferior system would simply try to vote among the sensors or use similarly unfounded methods to integrate the various readings. The present invention instead weights the important joint probabilities and determines the appropriate most likely conclusion (which might be, for this example, that the wearer is currently performing or has recently performed a low motion activity such as stationary biking).

According to a further aspect of the present invention, a sensor device such as sensor device **400** shown in FIGS. **12-17**, stand alone sensor device **700** shown in FIG. **21**, sensor device **800** shown in FIGS. **22-26** or sensor device **1201** shown in FIG. **40**, each of which have a processor and either have one or more sensors or receive signals from one or more sensors, may be used to automatically measure, record, store and/or report a parameter Y relating to the state of a person, preferably a state of the person that cannot be directly measured by the sensors. State parameter Y may be, for example and without limitation, calories consumed, energy expenditure, sleep states, hydration levels, ketosis levels, shock, insulin levels, physical exhaustion and heat exhaustion, among others. The sensor device is able to observe a vector of raw signals consisting of the outputs of certain of the

one or more sensors, which may include all of such sensors or a subset of such sensors. As described above, certain signals, referred to as channels, may be derived from the vector of raw sensor signals as well. A vector X of certain of these raw and/or derived channels, referred to herein as the raw and derived channels X, will change in some systematic way depending on or sensitive to the state, event and/or level of either the state parameter Y that is of interest or some indicator of Y, referred to as U, wherein there is a relationship between Y and U such that Y can be obtained from U. According to the present invention, a first algorithm or function f_1 is created using the sensor device that takes as inputs the raw and derived channels X and gives an output that predicts and is conditionally dependent on (i) either the state parameter Y or the indicator U, and (ii) some other state parameter(s) Z of the individual. This algorithm or function f_1 may be expressed as follows:

$$f_1(X) \not\perp\!\!\!\perp U+Z$$

or

$$f_1(X) \not\perp\!\!\!\perp Y+Z$$

According to the preferred embodiment, f_1 is developed using the algorithm development process described elsewhere herein which uses data, specifically the raw and derived channels X, derived from the signals collected by the sensor device, so-called gold standard data relating to U or Y and Z contemporaneously measured using a method taken to be the correct answer, for example highly accurate medical grade lab equipment, and various machine learning techniques to generate the algorithms from the collected data. The algorithm or function f_1 is created under conditions where the indicator U or state parameter Y, whichever the case may be, is present. As will be appreciated, the actual algorithm or function that is developed using this method will be highly dependent on the specifics of the sensor device used, such as the specific sensors and placement thereof and the overall structure and geometry of the senor device. Thus, an algorithm developed with one sensor device will not work as well, if at all, on sensor devices that are not substantially structurally identical to the sensor device used to create the algorithm.

Next, a second algorithm or function f_2 is created using the sensor device that takes as inputs the raw and derived channels X and gives an output that predicts and is conditionally dependent on everything output by f_1 except either Y or U, whichever the case may be and is conditionally independent of either Y or U, whichever the case may be. The idea is that certain of the raw and derived channels X from the one or more sensors make it possible to explain away or filter out changes in the raw and derived channels X coming from non-Y or non-U related events. This algorithm or function f_2 may be expressed as follows:

$$f_2(X) \not\perp\!\!\!\perp f\ Z \text{ and } (f_2(X) \perp\!\!\!\perp Y \text{ or } f_2(X) \perp\!\!\!\perp U)$$

Preferably, f_2, like f_1, is developed using the algorithm development process referenced above. f_2, however, is developed and validated under conditions where U or Y, whichever the case may, is not present. Thus, the gold standard data used to create f_2 is data relating to Z only measured using highly accurate medical grade lab equipment.

Thus, according to this aspect of the invention, two functions will have been created, one of which, f_1, is sensitive to U or Y, the other of which, f_2, is insensitive to U or Y. As will be appreciated, there is a relationship between f_1 and f_2 that will yield either U or Y, whichever the case may be. In other words, there is a function f_3 such that $f_3(f_1, f_2)=U$ or $f_3(f_1, f_2)=Y$. For example, U or Y may be obtained by subtracting the data produced by the two functions ($U=f_1-f_2$ or $Y=f_1-f_2$). In the case where U, rather than Y, is determined from the relationship between f_1 and f_2, the next step involves obtaining Y from U based on the relationship between Y and U. For example, Y may be some fixed percentage of U such that Y can be obtained by dividing U by some factor.

One skilled in the art will appreciate that in the present invention, more than two such functions (e.g. **f1**, **f2**, . . . f_n-1) could be combined by a last function f_n in the manner described above. In general, this aspect of the invention requires that a set of functions is combined whose outputs vary from one another in a way that is indicative of the parameter of interest. It will also be appreciated that conditional independence (or dependence) as used here will be defined to be approximate (in)dependence rather than precise (in)dependence.

The method just described may, for example, be used to automatically measure and/or report the caloric consumption or intake of a person using the sensor device, such as that person's daily caloric intake, also known as DCI. Automatic measuring and reporting of caloric intake would be advantageous because other non-automated methods, such as keeping diaries and journals of food intake, are hard to maintain and because caloric information for food items is not always reliable or, as in the case of a restaurant, readily available.

It is known that total body metabolism is measured as total energy expenditure (TEE) according to the following equation:

$$TEE=BMR+AE+TEF+AT,$$

wherein BMR is basal metabolic rate, which is the energy expended by the body during rest such as sleep, AE is activity energy expenditure, which is the energy expended during physical activity, TEF is thermic effect of food, which is the energy expended while digesting and processing the food that is eaten, and AT is adaptive thermogenesis, which is a mechanism by which the body modifies its metabolism to extreme temperatures. It is estimated that it costs humans about 10% of the value of food that is eaten to process the food. TEF is therefore estimated to be 10% of the total calories consumed. Thus, a reliable and practical method of measuring TEF would enable caloric consumption to be measured without the need to manually track or record food related information. Specifically, once TEF is measured, caloric consumption can be accurately estimated by dividing TEF by 0.1 (TEF=0.1*Calories Consumed; Calories Consumed=TEF/0.1).

According to a specific embodiment of the present invention relating to the automatic measurement of a state parameter Y as described above, a sensor device as described above may be used to automatically measure and/or record calories consumed by an individual. In this embodiment, the state parameter Y is calories consumed by the individual and the indicator U is TEF. First, the sensor device is used to create f_1, which is an algorithm for predicting TEE. f_1 is developed and validated on subjects who ate food, in other words, subjects who were performing activity and who were experiencing a TEF effect. As such, f_1 is referred to as EE(gorge) to represent that it predicts energy expenditure including eating effects. The gold standard data used to create f_1 is a VO2 machine. The function f_1, which predicts TEE, is conditionally dependent on and predicts the item U of interest, which is TEF. In addition, f_1 is conditionally dependent on and predicts Z which, in this case, is BMR+AE+AT. Next, the sensor device is used to create f_2, which is an algorithm for predicting all aspects of TEE except for TEF. f_2 is developed and validated

on subjects who fasted for a period of time prior to the collection of data, preferably 4-6 hours, to ensure that TEF was not present and was not a factor. Such subjects will be performing physical activity without any TEF effect. As a result, f_2 is conditionally dependent to and predicts BMR+AE+AT but is conditionally independent of and does not predict TEF. As such, f_2 is referred to as EE(fast) to represent that it predicts energy expenditure not including eating effects. Thus, f_1 so developed will be sensitive to TEF and f_2 so developed will be insensitive to TEF. As will be appreciated, in this embodiment, the relationship between f_1 and f_2 that will yield the indicator U, which in this case is TEF, is subtraction. In other words, EE (gorge)−EE (fast)=TEF.

Once developed, functions f_1 and f_2 can be programmed into software stored by the sensor device and executed by the processor of the sensor device. Data from which the raw and derived channels X can be derived can then be collected by the sensor device. The outputs of f_1 and f_2 using the collected data as inputs can then be subtracted to yield TEF. Once TEF is determined for a period of time such as a day, calories consumed can be obtained for that period by dividing TEF by 0.1, since TEF is estimated to be 10% of the total calories consumed. The caloric consumption data so obtained may be stored, reported and/or used in lieu of the manually collected caloric consumption data utilized in the embodiments described elsewhere herein, such as in connection with FIGS. **43**A-**43**H.

Preferably, the sensor device in this embodiment is sensor device **800** shown in FIGS. **22-26** that includes and/or is in communication with a body motion sensor such as an accelerometer adapted to generate data indicative of motion, a skin conductance sensor such as a GSR sensor adapted to generate data indicative of the resistance of the individual's skin to electrical current, a heat flux sensor adapted to generate data indicative of heat flow off the body, a body potential sensor such as an ECG sensor adapted to generate data indicative of the rate or other characteristics of the heart beats of the individual, and a temperature sensor adapted to generate data indicative of a temperature of the individual's skin. In this preferred embodiment, these signals, in addition the demographic information about the wearer, make up the vector of signals from which the raw and derived channels X are derived. Most preferably, this vector of signals includes data indicative of motion, resistance of the individual's skin to electrical current and heat flow off the body.

As a limiting case of attempting to estimate TEF as described above, one can imagine the case where the set of additional state parameters Z is zero. This results in measuring TEF directly through the derivational process using linear and non-linear derivations described earlier. In this variation, the algorithmic process is used to predict TEF directly, which must be provided as the gold-standard training data.

As an alternative to TEF, any effect of food on the body, such as, for example, drowsiness, urination or an electrical effect, or any other signs of eating, such as stomach sounds, may be used as the indicator U in the method just described for enabling the automatic measurement of caloric consumption. The relationship between U and the state parameter Y, which is calories consumed, may, in these alternative embodiments, be based on some known or developed scientific property or equation or may be based on statistical modeling techniques.

As an alternate embodiment, DCI can be estimated by combining measurements of weight taken at different times with estimates of energy expenditure. It is known from the literature that weight change (measured multiple times under the same conditions so as to filter out effects of water retention and the digestive process) is related to energy balance and caloric intake as follows: (Caloric Intake−Energy Expenditure)/K=weight gain in pounds, where K is a constant preferably equal to 3500. Thus, given that an aspect of the present invention relates to a method and apparatus for measuring energy expenditure that may take input from a scale, the caloric intake of a person can be accurately estimated based on the following equation: Caloric Intake=Energy Expenditure+(weight gain in pounds*K). This method requires that the user weigh themselves regularly, but requires no other effort on their part to obtain a measure of caloric intake.

Also note also that DCI can be estimated using an algorithm that takes sensor data and attempts to directly estimate the calories consumed by the wearer, using that number of calories as the gold standard and the set of raw and derived channels as the training data. This is just an instance of the algorithmic process described above.

Another specific instantiation where the present invention can be utilized relates to detecting when a person is fatigued. Such detection can either be performed in at least two ways. A first way involves accurately measuring parameters such as their caloric intake, hydration levels, sleep, stress, and energy expenditure levels using a sensor device and using the two function (f_1 and f_2) approach described with respect to TEF and caloric intake estimation to provide an estimate of fatigue. A second way involves directly attempting to model fatigue using the direct derivational approach described in connection with FIGS. **47** and **48**. This example illustrates that complex algorithms that predict the wearer's physiologic state can themselves be used as inputs to other more complex algorithms. One potential application for such an embodiment of the present invention would be for first-responders (e.g. firefighters, police, soldiers) where the wearer is subject to extreme conditions and performance matters significantly. In a pilot study, the assignee of the present invention analyzed data from firefighters undergoing training exercises and determined that reasonable measures of heat stress were possible using combinations of calibrated sensor values. For example, if heat flux is too low for too long a period of time but skin temperature continues to rise, the wearer is likely to have a problem. It will be appreciated that algorithms can use both calibrated sensor values and complex derived algorithms.

According to an alternate embodiment of the present invention, rather than having the software that implements f_1 and f_2 and determines U and/or Y therefrom be resident on and executed by the sensor device itself, such software may be resident on and run by a computing device separate from the sensor device. In this embodiment, the computing device receives, by wire or wirelessly, the signals collected by the sensor device from which the set of raw and derived channels X are derived and determines U and/or Y from those signals as described above. This alternate embodiment may be an embodiment wherein the state parameter Y that is determined by the computing device is calories consumed and wherein the indicator is some effect on the body of food, such as TEF. The computing device may display the determined caloric consumption data to the user. In addition, the sensor device may also generate caloric expenditure data as described elsewhere herein which is communicated to the computing device. The computing device may then generate and display information based on the caloric consumption data and the caloric expenditure data, such as energy balance data, goal related data, and rate of weight loss or gain data.

The terms and expressions which have been employed herein are used as terms of description and not as limitation, and there is no intention in the use of such terms and expres-

sions of excluding equivalents of the features shown and described or portions thereof, it being recognized that various modifications are possible within the scope of the invention claimed. Although particular embodiments of the present invention have been illustrated in the foregoing detailed description, it is to be further understood that the present invention is not to be limited to just the embodiments disclosed, but that they are capable of numerous rearrangements, modifications and substitutions.

What is claimed is:

1. An apparatus for deriving a state parameter of an individual, comprising:

a processor;

a sensor for generating a sensor output signal comprising data indicative of a rate of heat flowing off said individual's body, and a sensor for generating a sensor output signal comprising data indicative of a resistance of said individual's skin to an electric current, said sensor output signals being directed to an electronic communication link with said processor;

wherein said processor automatically determines a context of said individual with a naïve Bayesian classifier and a linear regression by using said data indicative of the rate of heat flowing off said individual's body, and said data indicative of the resistance of said individual's skin to an electric current; and

wherein said processor utilizes said context to predict the energy expenditure of said individual.

2. An apparatus according to claim **1**, wherein said context comprises at least one of a resting and an active state of said individual.

3. An apparatus according to claim **1**, said processor generating caloric consumption data for said individual, the apparatus further comprising a display which identifies said caloric expenditure data and said caloric consumption data.

4. An apparatus according to claim **3**, further comprising an input device in electronic communication with said processor, said caloric consumption data being determined from information collected by said input device from said individual relating to foods eaten by said individual.

5. An apparatus according to claim **3**, wherein said displayed information includes energy balance data.

6. An apparatus according to claim **3**, wherein said displayed information includes a rate of weight loss or gain of said individual.

7. An apparatus according to claim **3**, wherein said displayed information includes information relating to one or more goals of said individual, said goals relating to the monitoring and status of one or more of caloric consumption, caloric expenditure, energy balance and rate of weight loss or gain for said individual.

8. An apparatus according to claim **1**, said apparatus further comprising a wearable sensor device including said sensors which is mounted on said individual, said processor being included in a computing device located separately from said sensor device, each of said computing device and said sensor device having transmitting and receiving circuitry for generating and receiving electronic signals which include said electronic communication link.

9. A method of measuring a state parameter of an individual, comprising:

collecting data indicative of a resistance of said individual's skin to an electric current from a GSR sensor;

collecting data indicative of a rate of heat flowing off said individual's body;

utilizing a processor to automatically determine a context of said individual based on the data indicative of the resistance of said individual's skin to an electric current, and the data indicative of the rate of heat flowing off said individual's body; and

utilizing said context to predict an energy expenditure of said individual.

10. A method according to claim **9**, wherein said context comprises at least one of rest and active.

11. A method according to claim **9**, wherein the processor uses a naïve Bayesian classifier to determine the context.

12. A method according to claim **9**, further comprising generating caloric consumption data for said individual and displaying information based on said caloric expenditure data and said caloric consumption data.

13. A method according to claim **12**, said caloric consumption data being generated from information collected from said individual relating to foods eaten by said individual.

14. A method according to claim **12**, wherein said displayed information includes energy balance data.

15. A method according to claim **12**, wherein said displayed information includes a rate of weight loss or gain of said individual.

16. A method according to claim **12**, wherein said displayed information includes information relating to one or more goals of said individual, said goals relating to one or more of caloric consumption, caloric expenditure, energy balance and rate of weight loss or gain.

17. An apparatus for deriving a state parameter of an individual, comprising:

a processor;

a sensor for generating a sensor output signal comprising data indicative of a rate of heat flowing off said individual's body;

a sensor for generating a sensor output signal comprising data indicative of a resistance of said individual's skin to an electric current, said sensor output signals being directed to an electronic communication link with said processor;

wherein said processor automatically determines a context of said individual by using said data indicative of the rate of heat flowing off said individual's body, and said data indicative of the resistance of said individual's skin to an electric current; and

wherein said processor utilizes said context to predict the energy expenditure of said individual.

18. The apparatus according to claim **17**, wherein the processor uses a naïve Bayesian classifier and a linear regression to determine the context.

19. The apparatus according to claim **17**, wherein the processor uses a regression algorithm to determine each context.

20. The apparatus according to claim **17**, wherein the processor computes a longitudinal accelerometer average.

21. The apparatus according to claim **17**, wherein the processor computes a transverse accelerometer sum of average differences.

22. The apparatus according to claim **17**, wherein the processor computes a heat flux.

23. The apparatus according to claim **17**, wherein the processor computes a vector sum of transverse and longitudinal accelerometer sum of absolute differences.

24. The apparatus according to claim **17**, wherein the processor computes a basal metabolic rate.

25. The apparatus according to claim **17**, wherein the processor further comprises a context detector, the context detector comprising a naïve Bayesian classifier for predicting a context of the individual using at least one of a longitudinal accelerometer average, a transverse accelerometer sum of average differences and a heat flux.

* * * * *