IN THE UNITED STATES DISTRICT COURT
FOR THE EASTERN DISTRICT OF TEXAS
MARSHALL DIVISION

PICTIVA DISPLAYS INTERNATIONAL LTD. Plaintiff, v. SAMSUNG ELECTRONICS CO. LTD., and SAMSUNG ELECTRONICS AMERICA, INC., Defendants.	Civil Action No. 2:23-cv-00495-JRG JURY TRIAL DEMANDED

DECLARATION OF DR. E. FRED SCHUBERT

TABLE OF CONTENTS

I. Introduction 1

II. Qualifications and Experience 2

III. Legal Standards 5

IV. Level of Ordinary Skill in the Art 8

V. ’389 Patent Terms 11

A. “upon said devices” (cl. 34) and “upon said mask and said plurality of devices” (cl. 41) 11

B. “planarization layer” 15

C. “selectively depositing” 17

D. “depositing at least one planarization layer upon said mask and said plurality of devices; removing said mask from said substrate” 21

VI. ’547 Patent Terms 24

A. “an organic layer sequence which emits an electromagnetic radiation having a first wavelength spectrum during operation” 24

B. “the filter layer is transparent to the electromagnetic radiation having the first wavelength spectrum” 28

C. “a filter layer which is at least partially opaque to an electromagnetic radiation having a third wavelength spectrum which corresponds to at least one part of the second wavelength spectrum” 34

D. “an encapsulation one of disposed upstream and disposed downstream” 39

VII. ’223 Patent Terms 40

A. “metal complex” 40

B. “wherein the organic compound coordinates to the metal complex due to the joint vaporization” 44

C. “coordinate[s]” 46

D. “chain-like structure” 50

E. “network-like structure” 51

Pictiva EX2054
Samsung v Pictiva
IPR2024-01094

F. "degree of cross-linking of the electron-conducting layer" 52

VIII. '164 Patent Terms 55

A. "matrix" 55

B. "matrix material" 57

C. "charge carrier mobility" 59

D. "A method for the production of an electronic device according to claim 1, comprising the steps of:" 62

IX. '492 Patent Terms 63

A. "applied in a structured fashion" and "applying . . . in a structured fashion" 63

B. "optoelectronic component" 65

C. "passive electronic component" 69

D. "plurality of capacitors and/or resistors" 71

E. "a resistance region . . . which has a taper in a direction parallel to the electrically conductive layers" 73

F. "second trench" and "third trench" 77

G. "applying an electrically conductive electrode layer in a structured fashion to the dielectric above the first contact region and to the second contact region"; "an electrically conductive electrode layer, which is applied in a structured fashion to the dielectric above the first contact region and to the second contact region"; "an electrically conductive electrode layer, which is applied in a structured fashion on the dielectric above the first contact region and at least partly on the second contact region" 80

X. '425 Patent Terms 85

A. "the organic layer sequence comprises at least one radiation-emitting region configured to generate electromagnetic radiation in a spectral range from infrared radiation to UV radiation during operation" 85

B. "encapsulation" 88

Pictiva EX2054
Samsung v Pictiva
IPR2024-01094

I, Dr. E. Fred Schubert, declare as follows:

I. Introduction

1. I am qualified and authorized to attest to the matters set forth in this declaration. I have knowledge of the facts set forth in this declaration based on my own personal information or investigation into the relevant subject matter.

2. I have been retained as an expert to provide opinions regarding the understanding of a person of ordinary skill in the art in connection with certain terms in the claims of U.S. Patent Nos. 6,949,389 (the "'389 patent"), 8,314,547 (the "'547 patent"), 8,558,223 (the "'223 patent"), 8,723,164 (the "'164 patent"), 9,257,492 (the "'492 patent"), and 11,828,425 (the "'425 patent") (collectively, the "asserted patents").

3. I am being compensated at my usual hourly rate of $525 per hour. I am also being reimbursed for any out-of-pocket expenses. I have no financial interest in, or affiliation with, any party in this case. My compensation does not depend in any way on the outcome of this case, the substance of my testimony, or opinions that I express.

4. In rendering my opinions, I have considered the asserted patents, their file histories, the parties' claim construction disclosures, and any other documents referenced, discussed, or listed in my declaration, and my own knowledge and experience in the relevant fields. I have also reviewed the productions associated with the claim construction disclosures in this case.

5. My analysis of the materials produced in this matter is ongoing and I will continue to review any new material as it is provided. This declaration represents only those opinions I have formed to date. I reserve the right to amend or supplement my opinions based on additional documents or evidence I am presented, including without limitation any arguments or expert declarations advanced by the plaintiff in this case.

Pictiva EX2054
Samsung v Pictiva
IPR2024-01094

II. Qualifications and Experience

6. I have extensive experience in the design and implementation of flat panel display devices, including the design, fabrication, processing, and packaging of the light emitting diodes (LEDs), transistors, capacitors, electrodes and semiconductor materials that are commonly used in LED displays and organic LED (OLED) displays.

7. I am currently an active tenured full professor in the Department for Electrical, Computer, and Systems Engineering at the Rensselaer Polytechnic Institute ("RPI") located in Troy, New York.

8. I have also held additional positions at RPI. For example, from 2002 to 2012, I was a professor in the Department of Physics, Applied Physics, and Astronomy. From 2008 to 2009, I served as the founding director of RPI's Engineering Research Center for Smart Lighting, which was funded by the National Science Foundation (NSF).

9. Before I moved to RPI, from 1995 to 2002, I was a professor in the Department of Electrical and Computer Engineering at Boston University. I also served as the director of Boston University's Semiconductor Devices Research Laboratory.

10. Prior to my university career, from 1985 to 1995, I was a post-doctoral member of the technical staff, member of the technical staff, principal investigator, and member of management at AT&T Bell Laboratories in Holmdel, New Jersey, and Murray Hill, New Jersey.

11. I earned my Ph.D. degree in 1986, Master of Science degree in 1981, and Bachelor's degree in 1978, all in Electrical Engineering, from the University of Stuttgart in Germany.

12. I have published over 300 technical articles, most at highly competitive refereed conferences and rigorously reviewed technical journals. These papers relate to active-matrix displays, LCDs, LEDs, OLEDs, semiconductor electronics (e.g., field-effect transistors, thin-film

Pictiva EX2054
Samsung v Pictiva
IPR2024-01094

transistors, and bipolar junction transistors), semiconductor lasers and photo-detectors. These technologies are the foundations of flat panel display devices such as OLED display devices.

13. During my tenure in industry (AT&T Bell Laboratories), I was part of a working group on flat-panel displays. I have also performed technical consulting services in the field of OLED displays and associated TFTs (thin film transistors). One project concerned the enhancement of the carrier mobility in amorphous and poly-crystalline silicon TFTs. I have also served as technical expert witness in cases that concerned OLED displays, including the architecture of OLED pixel circuits.

14. At RPI, I regularly teach courses on microelectronic devices (such as TFTs) and displays (such as OLED displays). Light emitting diodes (LEDs and OLEDs) are routinely used as back lighting sources and emissive-pixel sources, and I have worked on and developed LEDs for these applications.

15. I am the author or editor of several books. For example, I authored the textbook "Light-Emitting Diodes," 1st, 2nd, 3rd and 4th editions, published by Cambridge University Press, Cambridge, UK (1st and 2nd editions) and Google Books (3rd and 4th editions). In this book, I provide a comprehensive review of the state-of-art technologies for designing, fabricating, processing, and manufacturing LEDs, including OLEDs. This textbook is well-known in the field of LEDs and it is routinely used by researchers and engineers working on LEDs and OLEDs.

16. In addition to my research, I have been teaching for more than 20 years. I have taught numerous undergraduate and advanced graduate courses on display devices, light-emitting diodes, integrated optoelectronics, microelectronics technology, solid-state devices, and semiconductor devices. I have also advised close to 50 Ph.D. and M.S. students while at the RPI

Pictiva EX2054
Samsung v Pictiva
IPR2024-01094

and Boston University, in areas such as LEDs, TFTs, semiconductor electronics, semiconductor lasers, and solar cells.

17. I have been actively involved in multiple technical communities, including the American Physical Society (APS), Institute of Electrical and Electronics Engineers (IEEE), Optical Society of America (OSA), Society for Optical Engineering (SPIE). I have served in the organizing committees of many technical conferences, including, for example:

- Program committee member and chair of "Display and Solid-State Lighting Devices" conference for OSA/IEEE Conference on Lasers and Electro-Optics (CLEO), 2003 - 2005.
- Member of the International Advisory Committee of First International Conference on Display LEDs (ICDL), Seoul, Korea, January 31 - February 2, 2007.
- Sub-Committee Chair of Track 6: Displays, Solid-State Lighting, Photovoltaics, and Energy-Efficient Photonics of Asia Communications and Photonics Conference (ACP), Shanghai, China, November 11 - 14, 2014. ACP is the largest and the most influential conference in Asia and Pacific Rim for communications and photonics technologies.

18. My research has been recognized by multiple organizations, universities, and institutions. The following is a set of honors and awards that I have received:

- Elected Fellow of the IEEE in 1999. According to the IEEE definition, "the grade of Fellow is one of unusual professional distinction conferred by the Board of Directors only upon a person of extraordinary qualifications and experience."
- Elected Fellow of the SPIE in 1999. According to the Society's bylaws, a Fellow "shall be distinguished through his achievements and shall have made outstanding contributions in the field of optics, or optoelectronics, or in a related scientific, technical, or engineering field."
- Elected Fellow of the OSA in 2001. OSA Fellows are elected by the OSA Board of Directors.
- Elected Fellow of the APS in 2001.
- Honored with RPI Medal as Senior Constellation Chair in 2002.

Pictiva EX2054
Samsung v Pictiva
IPR2024-01094

- Recipient of "Scientific American 50 Award" of 2007, as published in the January 2008 issue of Scientific American.
- Received "2008 Rensselaer Polytechnic Institute Trustee Faculty Achievement Award" in 2002, 2008, and 2012.

19. Additional details about my employment history, fields of expertise, and publications are further included in my attached curriculum vitae.

III. Legal Standards

20. I am not a lawyer, and I do not intend to offer any opinions as to the interpretation of the law. However, I have a general understanding of claim construction based on my experience with patents and my conversations with counsel.

21. I am informed that a patent may include two types of claims, independent claims and dependent claims. An independent claim stands alone and includes only the limitations it recites. A dependent claim can depend from an independent claim.

22. I am informed that claim construction is a matter of law to be decided by the Court. I understand that claim terms are presumed to have their plain and ordinary meaning, as understood by a person of ordinary skill in the art at the time of the invention, in the context of the patent specification, the prosecution history, and any other relevant evidence.

23. I am informed that to determine how a person of ordinary skill in the art would understand a claim term, one should look to those sources available that show what a person of skill in the art would have understood the disputed claim language to mean. Such sources include the words of the claims themselves, the remainder of the patent's specification, the prosecution history of the patent and the cited references (all considered "intrinsic" evidence), and "extrinsic" evidence, such as dictionary definitions, learned treatises and the opinions of qualified experts concerning relevant scientific principles, the meaning of technical terms, and the state of the art.

Pictiva EX2054
Samsung v Pictiva
IPR2024-01094

24. I am informed that, in construing a claim term, one looks primarily to the intrinsic patent evidence, including the words of the claims themselves, the remainder of the patent specification, and the prosecution history.

25. I am informed that extrinsic evidence, which is evidence external to the patent and the prosecution history, may also be useful in interpreting patent claims when the intrinsic evidence itself is insufficient.

26. I am informed that words or terms should be given their ordinary and accepted meaning unless it appears that the inventors were using them to mean something else. In making this determination, the claims, the patent specification, and the prosecution history are of paramount importance. Additionally, the specification and prosecution history must be consulted to confirm whether the patentee has acted as its own lexicographer (i.e., provided its own special meaning to any disputed terms), or intentionally disclaimed, disavowed, or surrendered any claim scope.

27. I understand that a person of ordinary skill in the art is deemed to read a claim term not only in the context of the particular claim in which the disputed term appears, but in the context of the entire patent, including the specification. For this reason, the words of the claim must be interpreted in view of the entire specification. The specification is the primary basis for construing the claims and provides a safeguard such that correct constructions closely align with the specification. Ultimately, the interpretation to be given a term can only be determined and confirmed with a full understanding of what the inventors actually invented and intended to envelope with the claim as set forth in the patent itself.

28. I understand that while intrinsic evidence is of primary importance, extrinsic evidence, *e.g.*, all evidence external to the patent and prosecution history, including expert and

Pictiva EX2054
Samsung v Pictiva
IPR2024-01094

inventor testimony, dictionaries, and learned treatises, can also be considered. For example, technical dictionaries may help one better understand the underlying technology and the way in which one of skill in the art might use the claim terms. Extrinsic evidence should not be considered, however, divorced from the context of the intrinsic evidence. Evidence beyond the patent specification, prosecution history, and other claims in the patent should not be relied upon unless the claim language is ambiguous in light of these intrinsic sources. Furthermore, while extrinsic evidence can shed useful light on the relevant art, it is less significant than the intrinsic record in determining the legally operative meaning of the claim language.

29. I understand that, through the patent claims, an applicant must particularly point out and distinctly claim the subject matter which it regards as its invention. I understand that a patent is invalid for indefiniteness if its claims, read in light of the specification delineating the patent, and the prosecution history, fail to inform, with reasonable certainty, those skilled in the art about the scope of the invention.

30. I understand that an applicant's arguments in the prosecution history that objectively convey to one of skill in the art that certain subject matter that is not included within the claimed invention can be used in litigation to restrict the scope of the claims. I understand that this doctrine of prosecution history disclaimer promotes the public notice function of the intrinsic evidence and protects the public's reliance on definitive statements made during prosecution. I understand that prosecution history disclaimer can arise from both claim amendments and arguments made to the PTO. I understand that any such disclaimer must be both clear and unmistakable to one of ordinary skill in the art.

Pictiva EX2054
Samsung v Pictiva
IPR2024-01094

IV. Level of Ordinary Skill in the Art

31. I understand that the claims must be understood from the perspective of a person of ordinary skill in the art at the time of the alleged inventions. I also understand that to determine the level of skill of a person of ordinary skill in the art, one must consider several factors including the types of problems encountered in the art, the solutions to those problems, the rapidity with which innovations are made, the sophistication of the technology, and the education level of active workers in the field.

32. In my opinion, a person of ordinary skill in the art ("POSITA") relevant to the asserted patents at the time of the invention would have at least the following qualifications.

33. A POSITA at the time of the alleged invention of the '389 patent would have had a bachelor's degree in Electrical Engineering, Materials Science, or a related field, and at least one year of experience in display technologies. Additional education might compensate for a deficiency in experience, and vice-versa. I understand that this is the level of ordinary skill in the art proposed by SDC and Dr. Subramanian in IPR2024-01222 and IPR2024-01223, and is agreeable to me.

34. A POSITA at the time of the alleged invention of the '547 patent would have a bachelor's degree in electrical engineering, physics, or a comparable field of study, and at least three years of research or industrial experience with semiconductor (organic or inorganic) optoelectronic devices and/or lighting or displays. An individual with additional education could have less research or industrial experience and vice versa. I understand that this is the level of ordinary skill in the art proposed by SDC and Dr. Eden in IPR2024-00855, and is agreeable to me.

35. A POSITA at the time of the alleged invention of the '223 patent would have had a university degree in chemistry and additional expertise or a second university degree in the field

Pictiva EX2054
Samsung v Pictiva
IPR2024-01094

of electrical engineering, particularly optoelectronics, or alternatively a university degree in electrical engineering and additional expertise or a second university degree in the field of chemistry. The person of ordinary skill in the art has spent several years studying the structure and function of organic optoelectronic components, in particular OLEDs, and has detailed knowledge of the chemical structure of light-emitting organic layers and the transport of charge carriers to these layers. In this respect, the person of ordinary skill in the art works at the interface between electrical engineering/physics (charge carrier transport and light emission processes in optoelectronic components) and chemistry, in particular organic chemistry (materials and layer stack combinations suitable). I understand that this is the level of ordinary skill in the art proposed by SDC and Dr. Rand in IPR2024-001094, and is agreeable to me.

36. A POSITA at the time of the alleged invention of the ’164 patent would have had a Bachelor’s degree in chemistry, physics, or a comparable field of study, and at least three years of research or industrial experience with organic optoelectronic light-emitting devices. An individual with additional education could have less research or industrial experience and vice versa. I understand that this is the level of ordinary skill in the art proposed by SDC and Dr. Holmes in IPR2024-01093, and is agreeable to me.

37. A POSITA at the time of the alleged invention of the ’492 patent would have had a bachelor’s degree in Electrical Engineering, Physics, or a comparable field of study, and at least three years of research or industrial experience with semiconductor (organic or inorganic) optoelectronic devices and/or lighting or displays. An individual with additional education could have less research or industrial experience and vice-versa. I understand that this is the level of ordinary skill in the art proposed by SDC and Dr. Kattamis in IPR2024-01187, and is agreeable to me.

Pictiva EX2054
Samsung v Pictiva
IPR2024-01094

38. A POSITA at the time of the alleged invention of the ’425 patent would have had a Bachelor’s degree in chemistry, physics, or a comparable field of study, and at least three years of research or industrial experience with organic optoelectronic light-emitting devices. An individual with additional education could have less research or industrial experience and vice versa. I understand that this is the level of ordinary skill in the art proposed by SDC and Dr. Holmes in IPR2024-01095, and is agreeable to me.

39. I meet each of these criteria and consider myself a person with at least ordinary skill in the art pertaining to each of the asserted patents. I would have been such a person at the time of the invention of each of the asserted patents.

40. I applied these levels of skill of a person of ordinary skill in the art for purposes of my analysis in this declaration.

41. The opinions that I express in this declaration would not change if the appropriate level of ordinary skill in the art was ultimately determined to be slightly higher or lower than what I have listed above. Additionally, I reserve the right to respond to any differing level of ordinary skill in the art offered by Pictiva or its experts.

Pictiva EX2054
Samsung v Pictiva
IPR2024-01094

V. ’389 Patent Terms

A. “upon said devices” (cl. 34) and “upon said mask and said plurality of devices” (cl. 41)

Term	Pictiva’s Construction	Samsung’s Construction
“upon said devices” (cl. 34)	plain and ordinary meaning to a person of ordinary skill in the art in light of the specification, that is, “upon the earlier-mentioned devices”	“directly on said devices”
“upon said mask and said plurality of devices” (cl. 41)	plain and ordinary meaning to a person of ordinary skill in the art in light of the specification, that is, “upon the earlier-mentioned masks and the earlier-mentioned multiple devices”	“directly on both said mask and said plurality of devices”

42. In my opinion, based on my reading of the patent and prosecution history as a whole, and based on my knowledge as a POSITA, a POSITA would understand “upon said devices” in claim 34 to mean “directly on said devices” and would understand “upon said mask and said plurality of devices” in claim 41 to mean “directly on both said mask and said plurality of devices.” This is based on the use of the word “upon” in the patent and in the prosecution history.

43. Claim 34 requires “selectively depositing at least one planarization layer upon said devices”; claim 41 requires “depositing at least one planarization layer upon said mask and said plurality of devices.” Thus, both claims require depositing planarization layer “upon” “devices.”

44. A POSITA would have the above understanding of “upon” based on the use of “upon” in the patent specification. For example, the patent references, for an embodiment, an “organic layer” that is “deposited upon the OLED devices,” where that layer is referenced as the “layer over the OLED devices,” indicating that “upon” means “directly on” in this context. See

’389 patent at 4:56-58 (“Once the organic layer is deposited upon the OLED devices, UV-light is used to selectively cure the layer over the OLED devices to produce the desired cross-linking.”).

45. During the prosecution history, the patent applicants addressed the term “upon,” and they made clear that “upon” a device means that the planarization layer is “directly on” the device, as opposed to being merely above a device.

46. The applicants for the ’389 patent addressed the term “upon said devices” in their November 18, 2003 response to an office action. The applicants stated: “Claims 1, 10-12, 19-21, 25-27, 34 are rejected under 35 U.S.C. §102(b) as being anticipated by U.S. Patent No. 5,703,433 by *Fujii* et al. *(‘Fujii’)*.” *Id.* at 13. The applicants then sought to overcome this rejection by asserting that the disclosure in *Fujii* does not constitute “depositing at least one planarization layer upon said devices.” Specifically, the applicants asserted:

> “Applicants submit that *Fujii* does not disclose ‘depositing at least one planarization layer upon said devices’. In *Fujii,* the photoresist 4 is deposited on barrier ribs 2. See column 4, lines 30-33. The barrier ribs 2 are not devices but rather, the barrier ribs 2 are insulating separators that separate plasma pixels. The electrode 9 and the fluorescent substance 3 together may comprise a device, however, the barrier ribs 2 are not devices. In Applicant's specification at, for example, page 6, lines 29-31, devices are described as, for example, active areas on a substrate; in addition, on page 7, lines 3-5, devices are described as, e.g., an OLED display, an organic detector, or an organic solar cell. Since the photoresist 4 is deposited on the barrier ribs 2, *Fujii* does not disclose ‘depositing at least one planarization layer upon said <u>devices</u>’ underline added) as recited in claim 1.”

Id. at 13.

47. The applicants of the ’389 patent thus asserted that *Fujii* did not include depositing a planarization layer “upon said devices” because, according to the applicants, the relevant layer in *Fujii* (the “photoresist 4”) was deposited “on barrier ribs 2” and ***not*** “upon” the relevant devices (which the applicants indicated could be the “electrode 9 and the fluorescent substance 3”).

Pictiva EX2054
Samsung v Pictiva
IPR2024-01094

48. The relevant disclosures in *Fujii* make clear that the applicants of the ’389 patent asserted that a planarization layer that is merely ***above*** a device is not “upon” that device; rather, the planarization layer is only “upon” the thing on which it is directly on.

49. The relevant disclosures in *Fujii*—primarily USPN 5,703,422 4:10-33—address *Fujii* Figures 1A and 1B, below:

FIG. 1A

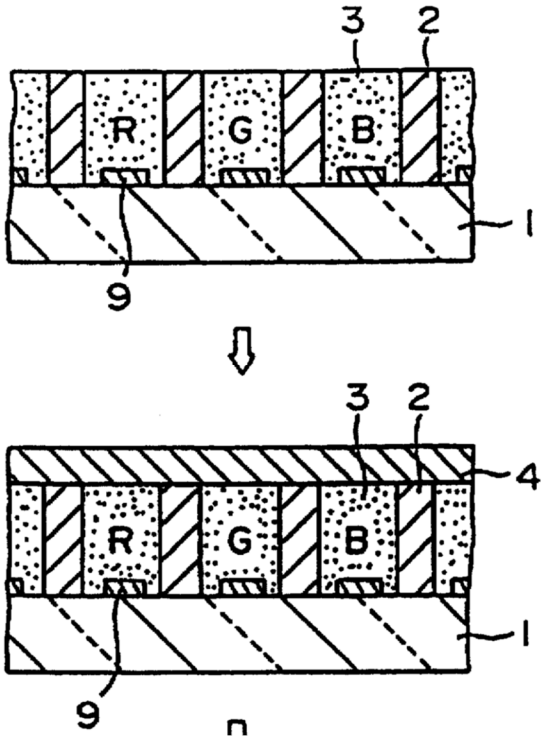

FIG. 1B

50. The relevant “planarization layer” is labeled 4 in Figure 1B, above, and the applicants of the ’389 patent contend that “[s]ince photoresist 4 is deposited on barrier ribs 2, *Fujii* does not disclose ‘depositing at least one planarization layer upon said devices” (emphasis in original), where “[t]he electrode 9 and the fluorescent substance 3 together may comprise a device.”

51. While Figure 1B, above, appears to indicate that photoresist 4 (the planarization layer) is directly on both the barrier rib 2 and the device (9 and 3 together), the discussion in *Fujii*

Pictiva EX2054
Samsung v Pictiva
IPR2024-01094

makes clear that this is not the case. Specifically, *Fujii* states that, in Figure 1A, "discharging spaces defined by barrier ribs 2 which have been formed on a glass substrate (rear plate) 1 are filled with three types of pastes of fluorescent substances 3 for red (R), green (G), and blue (B) colors." '422 patent 4:18-22. *Fujii* states: "Next, the fluorescent pastes 3 are dried so as to remove a solvent contained in an organic binder thereof." *Id.* 4:27-29. As made clear by this language, and other associated disclosures throughout the *Fujii* patent, a POSITA would understand that this evaporation step causes the paste, labeled as 3, to lose volume such that the substance after evaporation remains on the barrier ribs (2) and the substrate (1) but the substance no longer fills the discharge spaces (the cavities holding the material) up to the top of the cavities. Next, *Fujii* states: "Then, the substrate 1 is heated at a temperature in the range from 50° to 80° as shown in FIG. 1(b). Thereafter, a light-hardening type dry film (OSBR film made by Tokyo Ouka Kogyo Kabushiki Kaisha) is laminated on the substrate 1 as a photoresist 4."

52. Thus, while the applicable "planarization layer" in *Fujii* (the photoresist 4 in Figure 1B) is directly on the barrier ribs 2, it is not directly on the relevant "device" (components 3 and 9 together) because the substance labeled 3 does not fill the entire cavity that photoresist 4 covers. However, as shown by Figure 1B, the relevant planarization layer (4) is above the relevant device (3), and there are no intervening layers (other than some empty space) between the planarization layer and the relevant device. Thus, by asserting that photoresist 4 is not deposited upon the device (3 and 9, together), but photoresist 4 is deposited upon barrier rib 2, the applicants of the '389 patent made clear that the claim term "deposited upon said devices" means "deposited directly on said devices."

Pictiva EX2054
Samsung v Pictiva
IPR2024-01094

B. "planarization layer"

Claims	Pictiva's Construction	Samsung's Construction
34, 35, 41, 46	plain and ordinary meaning to a person of ordinary skill in the art in light of the specification, that is, a layer that can provide a planar surface	"a layer of material that planarizes such that the propagation of defects from one layer to another layer is interrupted and the topography of the underlying layer is not reproduced."

53. Based on my read of the patent and prosecution history and based on my understanding as a POSITA, a POSITA would understand the term "planarization layer" in claims 34, 35, 41, and 46 to mean: "a layer of material that planarizes such that the propagation of defects from one layer to another layer is interrupted and the topography of the underlying layer is not reproduced."

54. As recognized by the patent itself, "planarization layer" was a well-understood concept in the art at the time of the alleged invention. *See, e.g.*, '389 patent at 1:17-37. Planarization layers have key attributes to a POSITA and the patent itself and the prosecution history of the '389 patent use the term "planarization layer" consistent with the well-understood meaning of that layer.

55. Notably, planarizing techniques in the art included a number of different approaches. For example, in one common planarization technique, material is removed from an underlying layer to make that underlying layer more planar; this approach of removing material to planarize is used in the context of the well-known technique called chemical mechanical planarization ("CMP"). However, the '389 patent makes clear that it utilizes only planarization performed by addition of material (the planarizing material) to an underlying layer to make the underlying layer more planar. That is, the intrinsic record of the '389 patent as a whole, including the specification and the claims, makes clear that the planarization layer claimed in the '389 patent is a layer of a particular planarizing material that is deposited on an underlying layer (as opposed

to, say, a layer that has become more planar through the removal of material). *See, e.g.*, '389 patent at 7:4-5 ("[G]enerally any printing techniques suitable to deliver the desired planarization layer material can be used."); 6:57-61 ("As organic layer 506 is deposited selectively; there may be no need to cure the layer. It should be appreciated that the cure and patterning aspects could be independent; —relating to the type of material and deposition technique of for [sic] the planarization layer.").

56. One characteristic of the "planarization layer" is that the layer of material planarizes. The '389 patent makes clear throughout that the material in the "planarization layer" acts to add a layer on top of another layer that makes the surface more "planar," or flatter. In the "Background" section, the patent states, regarding prior art (and referring to certain items in Figure 1): "Typically, for PML ['polymer multi-layer'] structures, a planarization layer 106 is formed on top of OLED structure 104. Planarization layer 106 typically is an organic layer (e.g. acrylate or the like) and is provided to give a planar surface for the deposition of the PML structure 112 a." '389 patent at 1:30-35. Creating a more planar surface on one layer in order to allow better deposition of a subsequent layer was a common technique in the art at the time of the alleged invention.

57. Another well-accepted characteristic of a planarization layer that goes hand in hand with planarizing is that the layer of material interrupts the propagation of defects from one layer to another layer. *See, e.g.,* '389 patent at 4:33-41 ("It should be appreciated that layer 304 could also be any suitable planarization layer. For example, an inorganic or hybrid planarization layer might also suffice as a buffer layer that has desirable planarizing and/or protecting properties from the barrier layer deposition process. . . . Such an organic layer might provide a planar structure on which to deposit a barrier layer and to substantially cover point defects (e.g. dirt particles) in lower

Pictiva EX2054
Samsung v Pictiva
IPR2024-01094

layers. It is generally desirable that the organic layer be deposited in sufficient quantity so that any such layer is no longer 'conformal' to the point defect—i.e. any point defects are not geometrically projected upwards into layers deposited above.").

58. A layer of material that does not have this smoothing over property is not a planarization layer. The applicants stated that a material cannot be a "planarization layer" where it is "not used to interrupt the propagation of defects from one layer to another layer." July 19, 2004 Response to Non-Final Rejection at 11 ("[T]his 'sealing material 20' is not a planarization layer since it is not used to interrupt the propagation of defects from one layer to another layer".). Thus, the claim term "planarization layer" in the '389 patent does not include materials that do not "interrupt the propagation of defects" in this way.

59. The applicants also stated "metals cannot be used as a planarization layers" because "[m]etals . . . that are evaporated onto a layer do not cover-up the imperfections of the underlying layer, but rather the metals reproduce the topography of the underlying layer." Nov. 24, 2003 Response to Non-Final Rejection at 16. Thus, the applicants made clear that the "planarization layer" they claimed could only encompass a layer that "cover[s]-up the imperfections of the underlying layer" and that does not "reproduce the topography of the underlying layer."

C. <u>"selectively depositing"</u>

Claims	Pictiva's Construction	Samsung's Construction
34, 35, 41	Plain and ordinary meaning to a person of ordinary skill in the art in light of the specification	"depositing a material in only desired areas, such that no additional processing must be performed for removing unwanted material."

60. The concept of "selectively depositing" comes up throughout the '389 patent, including in a number of claims and throughout the specification. The '389 patent, as its title states, is generally directed to "Encapsulation for organic light emitting diodes devices." The

Pictiva EX2054
Samsung v Pictiva
IPR2024-01094

patent explains: "Encapsulation is a way to protect the OLED device from the damaging environmental effects—primarily from oxygen and moisture." '389 patent at 1:8-9. The patent describes certain purported drawbacks of a certain type of prior-art encapsulation, known as "polymer multi-layer," or "PML:

> The problem with this PML technique is that the only part of the device that requires encapsulation is the OLED structure itself—and not, e.g., the electrical contact pads. In fact, the contact pad must typically be exposed for electrical mating with external driver circuitry. So, at a minimum, additional processing must be performed for the removal of the PML structure over these areas. . . . Another potential problem with the current PML techniques is that by having the PML layer over the scribe and break lines and/or the glue lines the integrity of the sealed package may be deteriorated, for example by delamination of the PML layer over these areas.

'389 patent at 2:17-29.

61. In other words, the patent describes certain drawbacks of a prior art approach in which an encapsulation structure covers the entire underlying layer rather than just certain parts of it.

62. The patent discloses several embodiments that purport to achieve, in different ways, the goal of encapsulating only portions of the underlying layer, and the claims reflect these distinctions. For example, the "Summary of the Invention" section of the patent describes an embodiment in which the planarization layer is deposited "selectively" ('389 patent at 5:2), and it describes another embodiment in which the "planarization layer is deposited as an unpatterned liquid film"; that latter embodiment then requires "removing said areas of unwanted planarization layer." *Id.* at 2:60-64. A POSITA would recognize this distinction as being reflected in the claims; for example, claims 25 and 34 are similar, except claim 34 requires "selectively depositing at least one planarization layer," whereas claim 25 requires "depositing" (not "selectively depositing") the planarization layer, and claim 25 further requires "wherein said planarization layer is deposited as

Pictiva EX2054
Samsung v Pictiva
IPR2024-01094

an unpatterned liquid film," and "removing said areas of unwanted planarization layer." Similarly, claim 1 is also somewhat similar to claim 34, but claim 1 requires "depositing" (not selectively depositing) the planarization layer, and claim 1 requires several additional steps, including "removing area of the at least one planarization layer that are not hardened." This embodiment is also generally described in the "Summary of Invention" section. '389 patent at 2:41-54.

63. The specification also implies that "deposited in a patterned fashion" constitutes "selective deposition." *See* '389 patent at 6:53-63 ("Organic layer **506** is deposited in a patterned fashion as well as barrier layer **508**. As organic layer **506** is deposited selectively; there may be no need to cure the layer."). As a POSITA, I understand "deposited in a patterned fashion" to require that deposition be done in certain areas but not others (as opposed to an "unpatterned deposition," in which a material is deposited indiscriminately).

64. Reading the claims in the context of one another, in light of the intrinsic record as a whole, it is my opinion that a POSITA would understand the claims and the disclosed embodiments in the '389 patent to distinguish between merely "depositing" a material and then later removing portions of that material that are in unwanted areas, and "selectively depositing," in which the material is deposited where desired in the first instance, and no later removal steps are needed. Specifically, in my opinion, a POSITA would understand "selectively depositing" in claims 34, 35, and 41, in the context of the intrinsic record as a whole, to mean "depositing a material in only desired areas, such that no additional processing must be performed for removing unwanted material."

65. Throughout the patent, where a material is deposited initially only where it is desired, the term "selective deposition" is used. On the other hand, where a process that can include deposition of a material followed by removal of material from areas where that material is

Pictiva EX2054
Samsung v Pictiva
IPR2024-01094

not wanted, the patent calls that "deposition" (and not "selective deposition"). Among other reasons, this understanding of "selectively depositing" is required to appreciate the differences between various claims, some of which use the term "depositing," by itself (in an unqualified manner), along with later steps to remove unwanted material, while other claims use the term "selectively depositing."

66. The specification's explanation of "selectively depositing" is consistent with this understanding. *See, e.g.*, '389 patent at 6:66-7:5 ("The manner of selectively depositing the organic layer and the barrier layer may be accomplished in a variety of ways. For example, organic layer may be selectively deposited though *[sic]* a shadow mask (as depicted as mask **510**) or by ink jet deposition or other screen printing techniques. In fact, generally any printing techniques suitable to deliver the desired planarization layer material can be used."). A shadow mask is used to define places where deposition is to occur. By referring to a shadow mask as an example of selectively depositing, the specification makes clear that deposition through a mask can allow for deposition to be "confined over desired areas." '389 patent at 7:41-46 ("The mask might be such that it could be brought into contact with the OLED sufficiently well so that the encapsulation organic is confined over the desired areas and does not seep under the areas where the encapsulation organic is not desired (e.g. contact pads)."). This is consistent with my understanding of deposition of a material through a shadow mask.

Pictiva EX2054
Samsung v Pictiva
IPR2024-01094

D. <u>"depositing at least one planarization layer upon said mask and said plurality of devices; removing said mask from said substrate"</u>

Claim	Pictiva's Construction	Samsung's Construction
41	plain and ordinary meaning to a person of ordinary skill in the art in light of the specification, that is, "depositing at least one planarization on the earlier-mentioned mask and the earlier-mentioned multiple devices; removing the earlier-mentioned mask from the earlier-mentioned substrate"	"depositing at least one planarization layer upon said mask and said plurality of devices; **<u>then</u>** removing said mask from said substrate" (emphasis added)

67. For claim 41 of the '389 patent, in my opinion, a POSITA would understand that the claim element "depositing at least one planarization layer upon said mask and said plurality of devices" must be performed before the claim element "removing said mask from said substrate" (i.e., the two steps must be performed in the order they appear in the claim). This understanding is required by the claim language itself, other disclosures in the patent, and a POSITA's understanding of the use of a mask to deposit a planarization layer.

68. In the '389 patent, the purpose of using a mask with respect to the planarization layer is to "selectively deposit" the planarization layer. *See* '389 patent at 6:66-7:3 ("The manner of selectively depositing the organic layer and the barrier layer may be accomplished in a variety of ways. For example, organic layer may be selectively deposited though a shadow mask (as depicted as mask **510**) or by ink jet deposition or other screen printing techniques.").

69. Regarding the relevant claim language: three steps in claim 41 use the word "mask." One of these steps references "a mask"; the other two steps reference "said mask." The two steps with the language "said mask" each reference an already-discussed mask, but the step that references "a mask" does not; thus, in my opinion, the step that merely references "a mask" would come first among these three steps. That is, the first mask-related step to be performed is:

Pictiva EX2054
Samsung v Pictiva
IPR2024-01094

"depositing a mask on top of said substrate, such that mask openings are placed on top of said devices." The next two steps listed in the claim—the other two mask-related steps—must be performed in the order they appear in the claim because, otherwise, the claim language would not make sense, and a POSITA would not understand a reasonably certain way to perform the claim.

70. The two options for sequencing the steps after "depositing a mask. . ." would be:

(A) "depositing at least one planarization layer upon said mask and said plurality of devices"

Then

"removing said mask from said substrate";

Or:

(B) "removing said mask from said substrate"

Then

"depositing at least one planarization layer upon said mask and said plurality of devices"

71. Option "B" would require "depositing a mask," then "removing said mask," then "depositing at least one planarization layer upon said mask." This sequence does not make sense: depositing then removing the mask (and doing nothing in between) would not accomplish anything technically meaningful; it would like be putting a stencil in place then removing the stencil, without applying any paint or ink to the stencil while it is in place. Further, interpreting the claim to require depositing a planarization layer "upon said mask" after that mask had been removed has no reasonably certain meaning to a POSITA because there is no indication of where the mask goes after it is removed, or what deposition is contemplated upon that removed (but unplaced) mask. Option "B" is also ambiguous grammatically because "depositing at least one planarization layer

Pictiva EX2054
Samsung v Pictiva
IPR2024-01094

upon ***said*** mask" (emphasis added) has an unclear antecedent where the earlier-discussed mask had already been removed.

72. On the other hand, option "A," above—performing the two steps in the order they appear in the claim—would follow the expected sequence, both technically an grammatically. Under Option "A," a mask is deposited; then a planarization layer is deposited "upon said mask"; then the mask is removed. This approach can achieve type of deposition over a mask contemplated throughout the patent.

73. In my opinion, this interpretation is also consonant with the related disclosures throughout the patent, and it is not inconsistent with any disclosures in the patent. For example, the patent references "the mask's removal after encapsulation organic deposition." '389 patent at 7:38-39. (The patent sometimes references the planarization layer as an "organic" layer. *See* '389 patent at 1:32-33 ("Planarization layer 106 typically is an organic layer. . . .")). *See also id.* at 7:57-60 ("Once deposited, then the organic layer may or may not be cured—either partially or completely prior to the removal of mask 604. The mask could be removed by any means known in the art—e.g. by peeling it off; mechanical removal if a stencil, and the like."); *id.* at 7:66-8:1 ("After the mask is removed, then barrier layer 608 is selectively deposited over the planarization layers covering the OLED devices."). There are no disclosures in the patent that suggest a contemplated approach would include depositing a mask, then removing that mask, then depositing a planarization layer on that mask.

Pictiva EX2054
Samsung v Pictiva
IPR2024-01094

VI. ’547 Patent Terms

A. “an organic layer sequence which emits an electromagnetic radiation having a first wavelength spectrum during operation”

Claims	Pictiva’s Construction	Samsung’s Construction
1	plain and ordinary meaning to a person of ordinary skill in the art in light of the specification, where, “a first wavelength spectrum” denotes a spectral distribution of electromagnetic radiation having a first spectral component(s) and relative intensities. No other parts require construction	“an active layer and electrodes which emits an electromagnetic radiation with a first wavelength spectrum which corresponds to the entire wavelength spectrum of the electromagnetic radiation emitted by the organic layer sequence during operation”

74. In my opinion, the term “an organic layer sequence which emits an electromagnetic radiation having a first wavelength spectrum during operation,” as used in the ’547 patent and as understood by a POSITA at the time of the alleged invention, refers to “an active layer and electrodes which emits an electromagnetic radiation with a first wavelength spectrum which corresponds to the entire wavelength spectrum of the electromagnetic radiation emitted by the organic layer sequence during operation.”

75. A POSITA at the time of the alleged invention would understand that “an organic layer sequence which emits an electromagnetic radiation is “an active layer and electrodes which emits an electromagnetic radiation” based on the ’547 patent specification. The ’547 patent specification states that “[t]he optoelectronic device has ***an organic layer sequence 1*** and ***an electrode 10 and an active region 11***. In this case, as explained in the general part of the description, ***the organic layer sequence 1 can have functional layers or layer sequences and is embodied as an OLED***, for example. In particular, the ***active region 11 of the organic layer sequence 1 is suitable for emitting electromagnetic radiation 15*** having a first wavelength spectrum.” ’547 patent at 10:5-12 (emphases added). The organic layer sequence is highlighted

Pictiva EX2054
Samsung v Pictiva
IPR2024-01094

in yellow and is identified as part 1 below with the electrodes outlined in red and identified as part 10 and the active region is outlined in blue and identified as part 11 as shown in Figs. 1A and 1B below:

Pictiva EX2054
Samsung v Pictiva
IPR2024-01094

FIG 1A

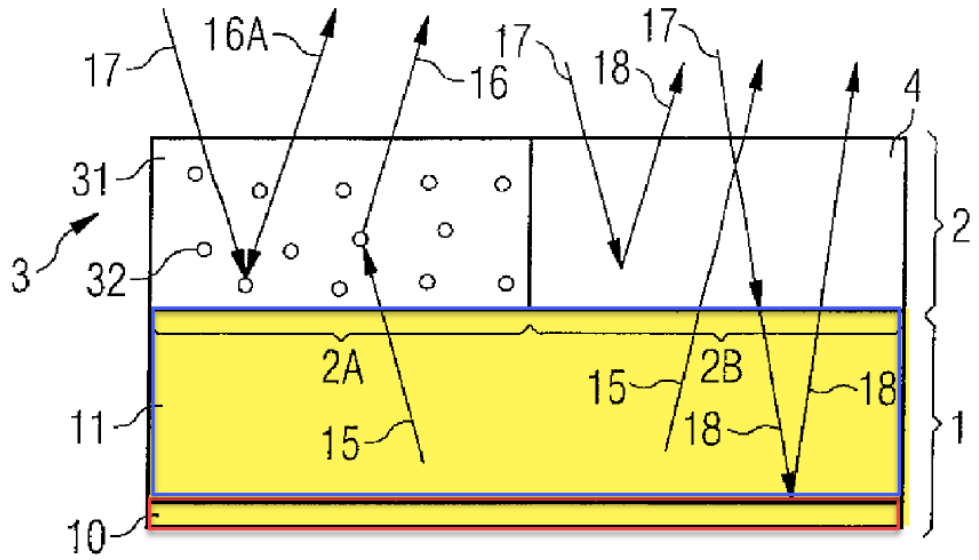

FIG 1B

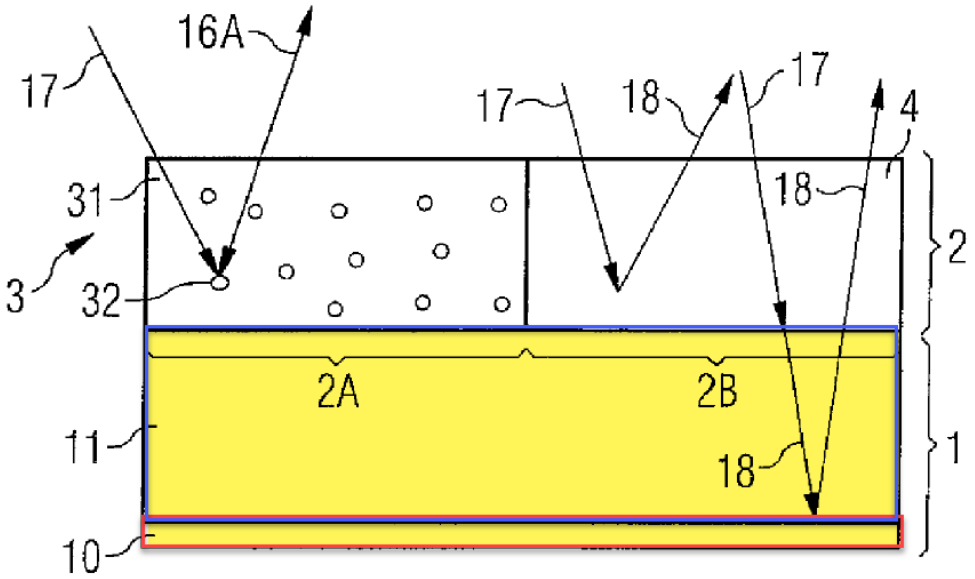

76. The ’547 patent distinguishes the organic layer sequence (part 1 in Figures 1A and 1B) from the “structured layer” (part 2 in Figures 1A and 1B) which include the wavelength

Pictiva EX2054
Samsung v Pictiva
IPR2024-01094

conversion and filter layers. ’547 patent at Abstract. A POSITA would understand from this description of the specification that “an organic layer sequence which emits an electromagnetic radiation” is “an active layer and electrodes which emits an electromagnetic radiation.”

77. Additionally, a POSITA would understand that the term “an organic layer sequence which ***emits an electromagnetic radiation having a first wavelength spectrum during operation***,” as used in the ’547 patent and as understood by a POSITA at the time of the alleged invention, refers to “an active layer and electrodes which ***emits an electromagnetic radiation with a first wavelength spectrum which corresponds to the entire wavelength spectrum of the electromagnetic radiation emitted by the organic layer sequence during operation***.” The electromagnetic radiation has a first wavelength spectrum that is the entire electromagnetic radiation emitted by the organic layer sequence during operation. A POSITA would understand that the electromagnetic radiation is the full emission during operation and not a subset or portion of the wavelength spectrum.

78. My opinion that “an organic layer sequence which ***emits an electromagnetic radiation having a first wavelength spectrum during operation***,” as used in the ’547 patent and as understood by a POSITA at the time of the alleged invention, refers to “an active layer and electrodes which ***emits an electromagnetic radiation with a first wavelength spectrum which corresponds to the entire wavelength spectrum of the electromagnetic radiation emitted by the organic layer sequence during operation***” is confirmed by the ’547 patent specification. For example, the ’547 patent specification states that “An optoelectronic device comprises ***an organic layer sequence (1), which emits an electromagnetic radiation (15) having a first wavelength spectrum during operation***….In this case, the first regions (2A) each have a wavelength conversion layer (3) designed to convert at least partially electromagnetic radiation (15) ***having***

Pictiva EX2054
Samsung v Pictiva
IPR2024-01094

the first wavelength spectrum into an electromagnetic radiation (16) having a second wavelength spectrum." '547 patent at Abstract. A POSITA would understand that the first wavelength spectrum during operation is the entire wavelength spectrum during operation.

79. I disagree with Pictiva's proposed construction. A POSITA would not understand "a first wavelength spectrum" denotes a spectral distribution of electromagnetic radiation having a first spectral component(s) and relative intensities. Pictiva's proposed construction would render this claim term meaningless, as the first wavelength spectrum could be a single spectral component, multiple spectral components, a single intensity or multiple intensities. A POSITA would understand the claimed first wavelength spectrum as being the entire wavelength spectrum—not a component or single intensity within the wavelength spectrum.

80. Thus, it is my opinion that a POSITA at the time of the alleged invention would understand "an organic layer sequence which emits an electromagnetic radiation having a first wavelength spectrum during operation" means "an active layer and electrodes which emits an electromagnetic radiation with a first wavelength spectrum which corresponds to the entire wavelength spectrum of the electromagnetic radiation emitted by the organic layer sequence during operation."

B. <u>"the filter layer is transparent to the electromagnetic radiation having the first wavelength spectrum"</u>

Claim	Pictiva's Construction	Samsung's Construction
1	plain and ordinary meaning to a person of ordinary skill in the art in light of the specification, where "transparent to an electromagnetic radiation having the first wavelength spectrum" Means "permitting an electromagnetic radiation having the first wavelength spectrum to pass through"; no other parts require construction	"the filter layer is transparent to the electromagnetic radiation having the first entire wavelength spectrum so it permits an electromagnetic radiation having the first wavelength spectrum to pass through in as unimpeded manner as possible"

Pictiva EX2054
Samsung v Pictiva
IPR2024-01094

81. In my opinion, the term "the filter layer is transparent to the electromagnetic radiation having the first wavelength spectrum," as used in the '547 patent and as understood by a POSITA at the time of the alleged invention, refers to "the filter layer is transparent to the electromagnetic radiation having the first entire wavelength spectrum so it permits an electromagnetic radiation having the first wavelength spectrum to pass through in as unimpeded manner as possible."

82. A POSITA at the time of the alleged invention would understand that "the filter layer is transparent to the electromagnetic radiation having the first wavelength spectrum" means "the filter layer is transparent to the electromagnetic radiation having the first entire wavelength spectrum so it permits an electromagnetic radiation having the first wavelength spectrum to pass through in as unimpeded manner as possible." A filter layer being transparent to a wavelength spectrum means that it is transparent to the entire wavelength spectrum. In order for the filter layer to be transparent to this entire wavelength spectrum, the filter layer needs to pass the emission in as unimpeded manner as possible. If the filter layer is impeding the emission by altering the spectral components, then it is not transparent. This is because, if the filter layer only partially passes through a portion of the wavelength spectrum or impedes the emission, then it is no longer transparent. Instead, the filter layer would be at least partially opaque.

83. My opinion that "the filter layer is transparent to the electromagnetic radiation having the first wavelength spectrum" means "the filter layer is transparent to the electromagnetic radiation having the first entire wavelength spectrum so it permits an electromagnetic radiation having the first wavelength spectrum to pass through in as unimpeded manner as possible" is confirmed by the '547 patent specification. For example, the '547 patent specification states that "the filter layer is designed to convert electromagnetic radiation having the third wavelength

Pictiva EX2054
Samsung v Pictiva
IPR2024-01094

spectrum into heat or thermal radiation, while ***electromagnetic radiation having the first wavelength spectrum can pass through the filter layer preferably in as unimpeded a manner as possible***. This means, in particular, that ***the electromagnetic radiation emitted by the organic layer sequence during operation remains substantially unaffected by the filter layer***." '547 patent at 3:55-62. Similarly, the '547 patent describes transparent as "the electromagnetic radiation 15 having the first wavelength can pass through the filter layer 4 in ***an unimpeded manner and substantially without any alternation of its spectral components***. To put it another way, the filter layer 4 ***is transparent to electromagnetic radiation 15 having the first wavelength spectrum***." *Id*. at 10:36-42. A POSITA would understand from these descriptions of transparent in the '547 patent specification that the filter layer is transparent to the electromagnetic radiation having the first entire wavelength spectrum so it permits an electromagnetic radiation having the first wavelength spectrum to pass through in as unimpeded manner as possible.

84. Additionally, a POSITA would understand from the '547 patent's disclosure that transparent to the electromagnetic radiation having the first entire wavelength spectrum means the emission passes through the filter in as unimpeded manner as possible, as the '547 patent refers to other filter layers as "at least partially opaque." For example, the '547 patent specification states "a ***filter layer***, which is ***at least partially opaque*** to an electromagnetic radiation having a third wavelength spectrum, which corresponds to at least one part of the second wavelength spectrum." '547 patent at 1:34-37. The '547 patent describes the non-transparent filter layer as a "filter layer [that] can be designed ***at least partially to absorb the electromagnetic radiation*** having the fourth spectrum." *Id.* at 9:3-5. A POSITA would understand that transparent means the emission passes through the filter in as unimpeded manner as possible, as partial absorption or blocking would not be "at least partially opaque" and not "transparent."

Pictiva EX2054
Samsung v Pictiva
IPR2024-01094

85. Additionally, a POSITA would understand a transparent filter must pass the entire first wavelength spectrum through the filter without alteration of its spectrum as the ’547 patent states “***‘partially’ denotes a partial spectrum of a spectrum, for example of the first spectrum***. In particular, the ***partial spectrum of a spectrum can consist of a part of the spectral components of this spectrum***. Furthermore, ***‘partially’ can also denote a part of an intensity of a spectrum or partial spectrum***.” ’547 patent at 2:40-45. A POSITA would understand from these disclosures in the ’547 patent that a transparent filter would not absorb or block a portion of or part of the spectral components of the first wavelength spectrum.

86. I disagree with Pictiva’s proposed construction. A POSITA would not understand “transparent to an electromagnetic radiation having the first wavelength spectrum” as meaning “permitting an electromagnetic radiation having the first wavelength spectrum to pass through.” Pictiva’s proposed construction fails to distinguish “transparent” from “at least partially opaque” which renders this limitation meaningless. Moreover, Pictiva’s proposed construction contradicts Pictiva’s statements to the U.S. Patent & Trademark Office. In its Preliminary Patent Owner Response, Pictiva described the ’547 patent’s disclosure of a filter layer that was transparent:

Pictiva EX2054
Samsung v Pictiva
IPR2024-01094

For instance, Figure 1A depicts an orgnaic layer sequence 1 that emits an electromangetic radiation 15 having a first wavelengh spectrum. EX1001, 10:9-12.

FIG 1A

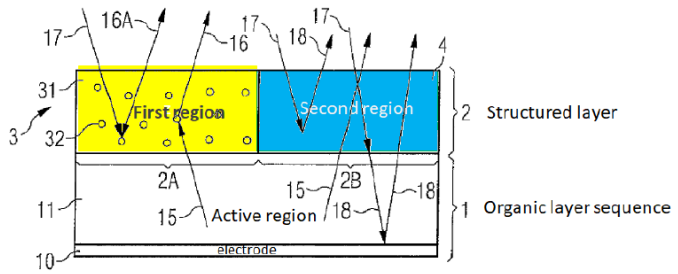

It further teache that

the electromagnetic radiation 15 having the first wavelength can pass through the filter layer 4 in an umimpeded manner and ***substanitally without any alternation of its spectral components***. To put it another way, the filter layer 4 ***is transparent to electromagnetic radiation 15 having the first wavelenght sepctrum***. EX1001, 10:36-42.

Pictiva EX2054
Samsung v Pictiva
IPR2024-01094

That is, being transparent to emission having a first wavelength spectrum implies the emission would pass through the filter "substantially without any alteration of its spectral components." *Id.* Figure 2 depicts the same.

FIG 2

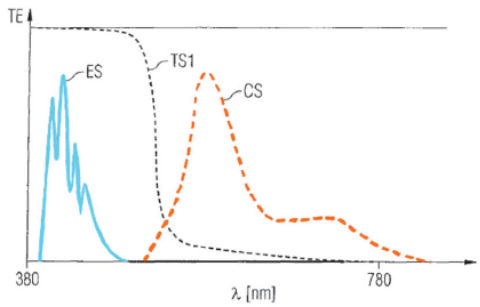

(Figs. 1A, 2, annotated)

In Figure 2, the blue curve depicts an "emission spectrum" of "*a spectral profile of the electromagnetic radiation 15 emitted by the organic layer sequence 1*." EX1001, 11:30-47. The orange CS curve depicts a conversion spectrum that "*represents the wavelength spectrum which is emitted by the wavelength conversion layer* 3" (*i.e.*, emission having a second wavlength spectrum) that "comprises a yellow wavelength range and a red-green wavelength range, respectively." *Id.* "The curve designated by TS1 indicates a transmission spectrum of the filter layer 4." *Id.*

As Figure 2 shows, "the filter layer 4 is transmissive to blue light and thus to the electromagnetic radiation 15 [having a first wavelength spectrum] emitted by the organic layer sequence 1, while it is opaque to electromagnetic radiation having a yellow wavelength range and a red and green wavelength range [i.e., a third wavelenght spectrum which corresponds to at least one part of the second wavelength spectrum]." *Id.*

Pictiva EX2054
Samsung v Pictiva
IPR2024-01094

IPR2024-00855 POPR at 58-60.

87. Thus, it is my opinion that a POSITA at the time of the alleged invention would understand "the filter layer is transparent to the electromagnetic radiation having the first wavelength spectrum," as used in the '547 patent to mean "the filter layer is transparent to the electromagnetic radiation having the first entire wavelength spectrum so it permits an electromagnetic radiation having the first wavelength spectrum to pass through in as unimpeded manner as possible."

C. "a filter layer which is at least partially opaque to an electromagnetic radiation having a third wavelength spectrum which corresponds to at least one part of the second wavelength spectrum"

Claim	Pictiva's Construction	Samsung's Construction
1	plain and ordinary meaning to a person of ordinary skill in the art in light of the specification, where "at least partially opaque to an electromagnetic radiation" means "at least partially block an electromagnetic radiation"; and "second/third wavelength spectrum" means "spectral distribution of electromagnetic radiation having second/third spectral component(s) and relative intensities." No other parts require construction	"a filter layer which is not transparent to an electromagnetic radiation having a third wavelength spectrum which corresponds to at least one part of the second wavelength spectrum"

88. In my opinion, the term "a filter layer which is at least partially opaque to an electromagnetic radiation having a third wavelength spectrum which corresponds to at least one part of the second wavelength spectrum," as used in the '547 patent and as understood by a POSITA at the time of the alleged invention, refers to "a filter layer which is not transparent to an electromagnetic radiation having a third wavelength spectrum which corresponds to at least one part of the second wavelength spectrum."

Pictiva EX2054
Samsung v Pictiva
IPR2024-01094

89. A POSITA at the time of the alleged invention would understand that "a filter layer which is at least partially opaque to an electromagnetic radiation having a third wavelength spectrum which corresponds to at least one part of the second wavelength spectrum," means "a filter layer which is not transparent to an electromagnetic radiation having a third wavelength spectrum which corresponds to at least one part of the second wavelength spectrum."

90. A filter layer being transparent to a wavelength spectrum means that it is transparent to the entire wavelength spectrum. In order for the filter layer to be transparent to this entire wavelength spectrum, the filter layer needs to pass the emission in as unimpeded manner as possible. If the filter layer is impeding the emission by altering the spectral components, then it is not transparent. This is because, if the filter layer only partially passes through a portion of the wavelength spectrum or alters spectral components, then it is no longer transparent. Instead, the filter layer would be partially opaque.

91. My opinion that "a filter layer which is at least partially opaque to an electromagnetic radiation having a third wavelength spectrum which corresponds to at least one part of the second wavelength spectrum" means "a filter layer which is not transparent to an electromagnetic radiation having a third wavelength spectrum which corresponds to at least one part of the second wavelength spectrum" is confirmed by the '547 patent specification. For example, the '547 patent specification states "a ***filter layer***, which is ***at least partially opaque*** to an electromagnetic radiation having a third wavelength spectrum, which corresponds to at least one part of the second wavelength spectrum." '547 patent at 1:34-37. The '547 patent describes the non-transparent filter layer as a "filter layer [that] can be designed ***at least partially to absorb the electromagnetic radiation*** having the fourth spectrum." *Id.* at 9:3-5. A POSITA would understand that transparent means permitting an electromagnetic radiation to pass through in as

Pictiva EX2054
Samsung v Pictiva
IPR2024-01094

unimpeded manner as possible, as any partial absorption or blocking would not be "at least partially opaque" and not "transparent."

92. Additionally, a POSITA would understand that "at least partially opaque" is not transparent, as transparent means that the filter must pass the entire first wavelength spectrum through the filter in as unimpeded manner as possible as the '547 patent states "***'partially' denotes a partial spectrum of a spectrum, for example of the first spectrum***. In particular, the ***partial spectrum of a spectrum can consist of a part of the spectral components of this spectrum***. Furthermore, ***'partially' can also denote a part of an intensity of a spectrum or partial spectrum***." '547 patent at 2:40-45. A POSITA would understand from these disclosures in the '547 patent that a transparent filter would not absorb or block a portion of or part of the spectral components of the first wavelength spectrum, while "at least partially opaque" would block a portion of or part of the spectral components of the wavelength spectrum.

93. For example, the '547 patent specification states that "the filter layer is designed to convert electromagnetic radiation having the third wavelength spectrum into heat or thermal radiation, while ***electromagnetic radiation having the first wavelength spectrum can pass through the filter layer preferably in as unimpeded a manner as possible***. This means, in particular, that ***the electromagnetic radiation emitted by the organic layer sequence during operation remains substantially unaffected by the filter layer***." '547 patent at 3:55-62. Similarly, the '547 patent describes transparent as "the electromagnetic radiation 15 having the first wavelength can pass through the filter layer 4 in ***an unimpeded manner and substantially without any alternation of its spectral components***. To put it another way, the filter layer 4 ***is transparent to electromagnetic radiation 15 having the first wavelength spectrum***." *Id*. at 10:36-42. A POSITA would understand from these descriptions of transparent in the '547 patent specification

Pictiva EX2054
Samsung v Pictiva
IPR2024-01094

that the filter layer is transparent to the electromagnetic radiation having the entire wavelength spectrum so the emission passes through the filter in as unimpeded manner as possible, while "at least partially opaque" would not be transparent.

94. I disagree with Pictiva's proposed construction. A POSITA would not understand "at least partially opaque to an electromagnetic radiation" means "at least partially block an electromagnetic radiation"; and "second/third wavelength spectrum" means "spectral distribution of electromagnetic radiation having second/third spectral component(s) and relative intensities." Pictiva's proposed construction fails to distinguish "at least partially opaque" from "transparent" which renders this limitation meaningless. Moreover, Pictiva's proposed construction contradicts Pictiva's statements to the U.S. Patent & Trademark Office. In its Preliminary Patent Owner Response, Pictiva described the '547 patent's disclosure of a filter layer that was partially opaque:

For instance, Figure 1A depicts an orgnaic layer sequence 1 that emits an electromangetic radiation 15 having a first wavelengh spectrum. EX1001, 10:9-12.

FIG 1A

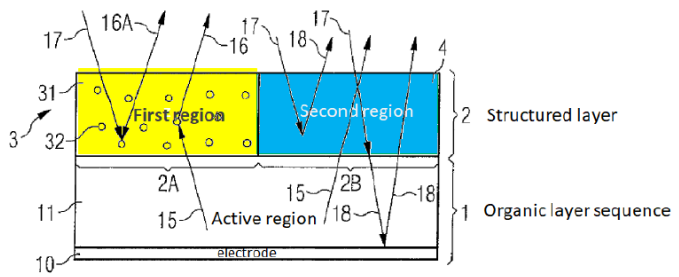

It further teache that

the electromagnetic radiation 15 having the first wavelength can pass through the filter layer 4 in an umimpeded manner and ***substanitally without any alternation of its spectral components***. To put it another way, the filter layer 4 ***is transparent to electromagnetic radiation 15 having the first wavelenght sepctrum***. EX1001, 10:36-42.

Pictiva EX2054
Samsung v Pictiva
IPR2024-01094

That is, being transparent to emission having a first wavelength spectrum implies the emission would pass through the filter "substantially without any alteration of its spectral components." *Id.* Figure 2 depicts the same.

FIG 2

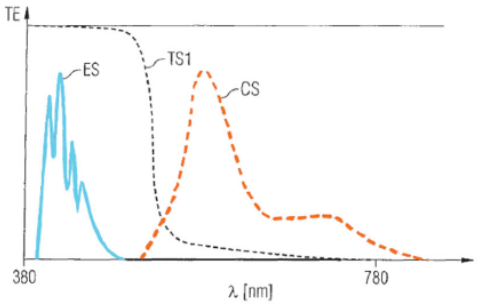

(Figs. 1A, 2, annotated)

In Figure 2, the blue curve depicts an "emission spectrum" of "*a spectral profile of the electromagnetic radiation 15 emitted by the organic layer sequence 1*." EX1001, 11:30-47. The orange CS curve depicts a conversion spectrum that "*represents the wavelength spectrum which is emitted by the wavelength conversion layer* 3" (*i.e.*, emission having a second wavlength spectrum) that "comprises a yellow wavelength range and a red-green wavelength range, respectively." *Id.* "The curve designated by TS1 indicates a transmission spectrum of the filter layer 4." *Id.*

As Figure 2 shows, "the filter layer 4 is transmissive to blue light and thus to the electromagnetic radiation 15 [having a first wavelength spectrum] emitted by the organic layer sequence 1, while it is opaque to electromagnetic radiation having a yellow wavelength range and a red and green wavelength range [i.e., a third wavelenght spectrum which corresponds to at least one part of the second wavelength spectrum]." *Id.*

Pictiva EX2054
Samsung v Pictiva
IPR2024-01094

IPR2024-00855 POPR at 58-60.

95. Thus, it is my opinion that a POSITA at the time of the alleged invention would understand "a filter layer which is at least partially opaque to an electromagnetic radiation having a third wavelength spectrum which corresponds to at least one part of the second wavelength spectrum," as used in the '547 patent to mean "a filter layer which is not transparent to an electromagnetic radiation having a third wavelength spectrum which corresponds to at least one part of the second wavelength spectrum."

D. "an encapsulation one of disposed upstream and disposed downstream"

Claim	Pictiva's Construction	Samsung's Construction
11	plain and ordinary meaning to a person of ordinary skill in the art in light of the specification, that is, "an encapsulation that is disposed either upstream or downstream of the structured layer in the beam path of the electromagnetic radiation emitted by the organic layer sequence	Indefinite

96. In my opinion, the '547 patent fails to inform a POSITA with reasonable certainty of the scope of the term "an encapsulation one of disposed upstream and disposed downstream," and hence the scope of the claimed invention.

97. A POSITA would not understand the scope of the term "an encapsulation one of disposed upstream and disposed downstream." This term requires an encapsulation that is both upstream and downstream. In other words, the claim language discloses "an encapsulation one of [which is] disposed upstream and [one of which is] disposed downstream." However, the specification does not provide any guidance on how such an encapsulation could meet this requirement in the claim. As the '547 patent fails to provide reasonable certainty of the scope of

the term "an encapsulation one of disposed upstream and disposed downstream," it is my opinion the term is indefinite.

98. I also disagree with Pictiva's proposed construction. Pictiva's proposed construction simply rewrites the claim to require that "an encapsulation that is disposed either upstream or downstream of the structured layer in the beam path of the electromagnetic radiation emitted by the organic layer sequence." However, this is not what the claim states and a POSITA would understand that Pictiva's proposed construction is not the same as "an encapsulation one of disposed upstream and disposed downstream."

99. Thus, it is my opinion that the '547 patent fails to inform a POSITA with reasonable certainty of the scope of the term "an encapsulation one of disposed upstream and disposed downstream," and hence the scope of the claimed invention.

VII. '223 Patent Terms

A. "metal complex"

Claims	Pictiva's Construction	Samsung's Construction
1, 2, 10, 11	plain and ordinary meaning to a person of ordinary skill in the art in light of the specification, that is, a compound containing one or more metal elements that coordinate to one or more non-metal elements, fragments or ions	"a metal complex that is not a compound composed of one or more metal atoms and one or more oxygen atoms"

100. During the prosecution of the '223 patent, the applicant distinguished the Ikeda prior art reference from the pending claims. Ikeda included a compound composed of one or more metal atoms and one or more oxygen atoms. '223 patent prosecution history at Nov. 1, 2012 office action. The Examiner assumed that this was a metal complex:

Pictiva EX2054
Samsung v Pictiva
IPR2024-01094

Claims 1-4 and 9-15 are rejected under 35 U.S.C. 102(e) as being anticipated by Ikeda et al. (US 2008/0258610 A1).

In regard to claim 1, Ikeda e al. teach an organic electronic component, comprising: a substrate 101, a first electrode 102, a second electrode 107, an electron-conducting layer 103 which is arranged in such a way that it is electrically conductively connected to at least one of the electrodes 102/107, wherein the electron-conducting layer 103 can be obtained by joint vaporization of a metal complex, which comprises a central metal atom, with an organic compound (ABSTRACT, Figures 1A-1C, pages 2-4, paragraphs [0062]-[0082]).

101. The applicant disagreed and characterized Ikeda's alleged metal complex as a "metal oxide," after which the applicant provided its working definition of "metal oxide" ("a compound composed of one or more metal atoms and one or more oxygen atoms"). Finally, the applicant stated that its invention did not encompass metal oxides of that type. '223 patent prosecution history at Feb. 1, 2013 response to office action ("As clearly shown above, Applicants contend that Ikeda discloses a light emitting element in which a layer must have a metal oxide. Furthermore, Ikeda discloses that the layer is arranged on the anode of the light emitting element and is produced by simultaneously evaporating a metal oxide and an organic compound (See, for example, Abstract, paragraphs [0093] – [0095] and [0109]). A person of ordinary skill in the art understands that ***a metal oxide is a compound composed of one or more metal atoms and one or more oxygen atoms***. In direct contrast, Applicants assert that in the presently claimed application, the organic electronic layer is obtained by joint vaporization of a metal complex, which comprises a central metal atom, with an organic compound.") (emphasis added):

Pictiva EX2054
Samsung v Pictiva
IPR2024-01094

Lastly, *Ikeda* states (emphasis added):

> The first layer 103 is a layer including a cluster in which arylamine compounds having a biphenyl skeleton form a dimolecular body by being arranged in parallel and **metal oxide** is adjacent to the dimolecular body. **As a specific example of the metal oxide included in the first layer 103, molybdenum oxide (MoO_x), vanadium oxide (VO_x), ruthenium oxide (RuO_x), tungsten oxide (WO_x), or the like is given. Moreover, indium tin oxide (ITO) or zinc oxide (ZnO) can be used**. Not only the above mentioned substances, but also other substances may be used.

Ikeda at page 3, paragraph [0066].

As clearly shown above, Applicants contend that *Ikeda* discloses a light emitting element in which a layer must have a metal oxide. Furthermore, *Ikeda* discloses that the layer is arranged on the anode of the light emitting element and is produced by simultaneously evaporating a metal oxide and an organic compound (*See*, for example, Abstract, paragraphs [0093] – [0095] and [0109]). A person of ordinary skill in the art understands that a metal oxide is a compound composed of one or more metal atoms **and** one or more oxygen atoms.

In direct contrast, Applicants assert that in the presently claimed application, the organic electronic layer is obtained by joint vaporation of a metal complex, which comprises **a** central metal **atom**, with an organic compound.

102. Following these remarks by the applicant, the examiner allowed the claims which ultimately issued. In the Notice of Allowance, the examiner specifically stated that the pending claims were allowed because the prior art failed to teach the claim limitations that included "metal complex":

Pictiva EX2054
Samsung v Pictiva
IPR2024-01094

Allowable Subject Matter

Claims 1-4 and 6-15 are allowed.

The following is a statement of reasons for the indication of allowable subject matter: The prior art of record does not disclose, make obvious, or otherwise suggest the structure of the applicant's together with the other limitations of the independent claims, such as:

In claim 1, "wherein the electron-conducting layer is obtained by joint vaporization of a metal complex, which comprises a central metal atom, with an organic compound, wherein the organic compound comprises a heteroaromatic compound which is conjugated with an aromatic compound via a C-C bond"; and

In claim 11, "wherein the electron-conducting layer is deposited by means of simultaneous vaporization of a metal complex and an organic compound, wherein the organic compound comprises a heteroaromatic compound which is conjugated with an aromatic compound via a C-C bond".

'223 patent prosecution history at June 12, 2013 Notice of Allowability.

103. In my opinion, a POSITA reading the prosecution history (in context with the other intrinsic and extrinsic evidence) would have understood that the applicant disclaimed any metal complexes that were "a compound composed of one or more metal atoms and one or more oxygen atoms." The applicant's language is straightforward and express in this regard. There is no ambiguity that the applicant told the patent office that the scope of the claimed "metal complex" in the '223 patent expressly does not include "a compound composed of one or more metal atoms and one or more oxygen atoms." In my opinion, a POSITA would have recognized the clear and

Pictiva EX2054
Samsung v Pictiva
IPR2024-01094

unmistakable disclaimer of claim scope from that applicant's remarks. For example, the applicant used the terminology "in direct contrast" to set apart its invention from the prior art, which instead used "a compound composed of one or more metal atoms and one or more oxygen atoms."

104. To the extent that Pictiva or its expert argue that the disclaimer was limited to "metal oxides," or in particular to metal oxides that contain "one or more metal atoms and one or more oxygen atoms" ***and no other atoms***, that is not what the applicant told the patent office the disclaimer was. The applicant defined its understanding of "metal oxide": "A person of ordinary skill in the art understands that ***a metal oxide is*** a compound composed of one or more metal atoms and one or more oxygen atoms." (emphasis added). In my opinion, a POSITA would have understood the applicant's language here to be definitional (*i.e.,* lexicographical). To the extent that the applicant's own interpretation of "metal oxide" differs from the understanding of that term in the general field of chemistry, a POSITA reading the relevant section of the prosecution history would have understood that the applicant clearly expressed an intention that its own interpretation should control, and thus should describe the scope of the disclaimer.

B. <u>"wherein the organic compound coordinates to the metal complex due to the joint vaporization"</u>

Claim	Pictiva's Construction	Samsung's Construction
2	plain and ordinary meaning to a person of ordinary skill in the art in light of the specification, that is, "wherein the organic compound coordinates to the metal complex attributable directly or indirectly to the joint vaporization"	"wherein the organic compound coordinates to the metal complex in the gas phase after the organic compound and the metal complex are jointly vaporized"

105. In my opinion, a POSITA reading claim 2 of the '223 patent in light of the specification would have recognized that the plain language of the claim requires a direct causal relationship between the joint vaporization and the coordination, because of the use of the phrase

Pictiva EX2054
Samsung v Pictiva
IPR2024-01094

"due to." A POSITA would have recognized that the coordination must therefore occur ***after*** the joint vaporization. Similarly, specifying that coordination happens "due to joint vaporization" necessarily means that the reactants must first enter the gas phase via joint vaporization, and that the coordination reaction then occurs between the gaseous reactants. If the coordination occurred in the solid phase, for example, then the metal complex and organic compound would not coordinate "due to" the joint vaporization, but simply incidentally following a joint vaporization. A POSITA would have recognized that the claim language requires a stronger linkage between the joint vaporization and the coordination than simply occurring subsequently, and in particular that the coordination is the direct consequence "due to" joint vaporization, which would naturally require the coordination to occur in the gas phase where the reagents are vaporized.

106. The specification supports this interpretation. The '223 patent notes that it is possible for coordination to occur either in the gas phase or when the reactants "meet one another on the substrate surface." '223 patent at 1:60-63; *see also id.* at 11:17-23. A POSITA would have recognized that the relevant language of claim 2 ("due to the joint vaporization") explicitly selects one of these scenarios and requires the coordination to occur in the gas phase. Out of the alternative embodiments described in the specification for where the coordination occurs, claim 2 is directed specifically to the embodiment where coordination occurs in the gas phase.

107. I disagree with Pictiva's proposed construction. First, the proposed construction does not elucidate what "due to" requires because it simply replaces it with the synonym "attributable." Second, the proposed construction allows the coordination to be attributable "indirectly," which a POSITA would not consider to be within the plain and ordinary meaning of "due to," and which does not require a sufficiently causal relationship between the joint vaporization and the coordinate. In other words, Pictiva's proposed construction reads out "due

Pictiva EX2054
Samsung v Pictiva
IPR2024-01094

to" from the claim language and effectively rewrites the larger phrase to "wherein the organic compound coordinates to the metal complex, and joint vaporization occurs at some point." Third, the proposed construction does not acknowledge that the coordination must occur ***after*** the joint vaporization.

C. <u>"coordinate[s]"</u>

Claims	Pictiva's Construction	Samsung's Construction
2, 11 14	plain and ordinary meaning to a person of ordinary skill in the art in light of the specification, that is, "have/has bonding interaction"	"form[s] a dative bond with"

108. The term "coordinate" has a well-understood and well-established meaning in the chemistry field, which is "form a dative bond with." As an initial matter, "coordinate" refers to a specific family of chemical interactions called "coordination chemistry." Coordination chemistry describes how metal ions interact with ligands. In coordination chemistry, when we say an atom or molecule "coordinates," that specifically refers to the formation of a dative bond (also called a "coordinate covalent bond"). In a dative bond, one atom (the donor) provides both electrons for the bond. The other atom (the acceptor) provides an empty orbital to accept those electrons. This is distinct from regular covalent bonds, where each atom contributes one electron. The verb "coordinate" specifically captures the unique nature of dative, or coordinate covalent, bonds, where ligands "donate" or "coordinate" their electron pairs to the metal center.

109. The plain and ordinary meaning of "coordinate" is supported by relevant extrinsic evidence. For example, The New Oxford American Dictionary, Second Edition (2005) defines "coordinate" as "Chemistry denoting a type of covalent bond in which one atom provides both the shared electrons," and it also defines "coordination" as "Chemistry the linking of atoms by coordinate bonds." PICTSAMSUNGEDTX209887. As another example, McGraw-Hill

Pictiva EX2054
Samsung v Pictiva
IPR2024-01094

Dictionary of Scientific and Technical Terms, Sixth Edition (2003) defines "coordinate bond" as "See coordinate valence" and defines "coordinate valence" as "[chem] A chemical bond between two atoms in which a shared pair of electrons forms the bond and the pair has been supplied by one of the two atoms. Also known as coordinate bond; dative bond." PICTSAMSUNGEDTX209893. As a further example, Hawley's Condensed Chemical Dictionary, Fifteenth Edition (2007) defines "coordinate bond" as "(dative bond). A covalent bond consisting of a pair of electrons donated by only one of the two atoms it joins." PICTSAMSUNGEDTX209911. And Encyclopedia of Chemistry (2005) defines "coordinate covalent bond" as "A bond between two atoms in which the shared electrons are contributed by only one of the atoms," and further defines "coordination compound (coordination complex)" as "A compound containing coordinate covalent bonds." PICTSAMSUNGEDTX209916. Chemistry textbooks also agree that "coordinate" refers to a dative bond. *E.g.*, FHSST Chemistry (2008) at 71 ("A dative covalent bond (also known as a coordinate covalent bond) is a description of covalent bonding between two atoms in which both electrons shared in the bond come from the same atom. This happens when a Lewis base (an electron donor) donates a pair of electrons to a Lewis acid (an electron acceptor)."). PICTSAMSUNGEDTX210497.

110. Nothing in the intrinsic evidence calls into question this basic and well-understood meaning of "coordinate." Indeed, the specification assumes the traditional, well-understood meaning of "coordinate." *See, e.g.*, '223 patent at 2:6-12 ("By virtue of the coordination of the organic compound on the metal complexes, and the associated overlap of the orbitals, additional electrons can be transferred from the metal to the ligand via a metal complex-ligand-electron transfer (metal-ligand-charge-transfer complex). These electrons can be available for electron transportation in the organic electronic component."); 3:7-20 (similar).

Pictiva EX2054
Samsung v Pictiva
IPR2024-01094

111. Thus, specific coordination interactions are an integral part of the invention: they are required to achieve the invention's goals of more efficient electron transport. *Id.* at 2:13-16 ("By increasing the 'free' electrons, the electron conductivity in the component is significantly improved. This leads to an increase in efficiency and serviceable life of the organic electronic component."); 3:7-20 (similar).

112. I note further that the specification explicitly describes nitrogen as suitable for coordination because of a "free electron pair," which indicates that the applicant understood that coordination requires a donation of two free electrons. *Id.* at 3:65-67 ("Here, N is a preferred heteroatom. Due to the mostly free electron pair, N has very good coordination properties with respect to metal complexes."); *see also id.* at 10:55-59 ("Each of these compounds comprises a nitrogen heterocycle and in addition a further nitrogen heterocycle or a homoaromatic compound which is formed from C-atoms. Each of these compounds thus has several coordination sites for metal complexes.").

113. Moreover, the specification notes that coordination may occur "via the aromatic system (π-electrons)," which is encompassed by Samsung's construction. *Id.* at 3:54-64. In coordination chemistry, aromatic π-electrons can serve as electron donors just like lone pairs can. The π-electrons occupy bonding molecular orbitals in the aromatic ring. These electrons can donate into empty d-orbitals on metals. The interaction creates a delocalized bonding network between the metal and the aromatic ring. The π-system donates both electrons to the metal, just like a lone pair would. In traditional lone pair dative bonds, two electrons move from a donor atom to an acceptor. In π-dative bonds, two electrons move from a π-orbital to an acceptor. The source of the electron pair (single atom vs. molecular orbital) does not change the fundamental

Pictiva EX2054
Samsung v Pictiva
IPR2024-01094

dative nature of the interaction. Thus, a POSITA would understand that Samsung's proposed construction does not exclude any embodiments described in the specification.

114. I disagree with Pictiva's proposed construction. First, it is not clear what Pictiva's intended meaning of "bonding interaction" is, and that language does not occur in the specification. Second, Pictiva's proposed construction encompasses types of bonds which are not even covalent. Some examples include ionic bonds and metallic bonds. *See* FHSST Chemistry (2008) at 65 (PICTSAMSUNGEDTX210491) ("A chemical bond is formed when atoms are held together by attractive forces."), 74 (PICTSAMSUNGEDTX210500) ("In covalent bonding, electrons are shared between the atoms. There is another type of bonding, where electrons are transferred from one atom to another. This is called ionic bonding."), 76 (PICTSAMSUNGEDTX210502) ("The structure of a metallic bond is quite different from covalent and ionic bonds."). Third, Pictiva's proposed construction encompasses regular, non-coordinate/dative covalent bonds, which are distinct from the normal meaning of "coordinate." *See, e.g.*, Dictionary of Science and Technology, Second Edition (2007) (PICTSAMSUNGEDTX209899), which defines "coordinate bond" as "a chemical bond in which a pair of electrons is shared by two atoms, both of which are supplied by one atom (NOTE: a coordinate bond is a type of covalent bond.)" Fourth, Pictiva's construction is not congruent with the technical principles of the invention, which requires dative bonds in order to achieve its efficiency and increased component lifetime goals. '223 patent at 2:13-16; 3:7-20. In my opinion, allowing additional types of non-dative "bonding interactions" would not achieve the goals of the invention and would not make technical sense.

Pictiva EX2054
Samsung v Pictiva
IPR2024-01094

D. <u>"chain-like structure"</u>

Claim	Pictiva's Construction	Samsung's Construction
12	plain and ordinary meaning to a person of ordinary skill in the art in light of the specification, that is, "a structure that resembles a chain"	"a structure where two metal complexes are linked by an organic compound or a structure where two organic compounds are linked by a metal complex"

115. The term "chain-like structure" does not have a well-understood or plain and ordinary meaning in chemistry. In my opinion, a POSITA would therefore have looked to the specification for guidance on the appropriate definition. The specification gives a definition of a "chain-like structure." '223 patent at 2:33-38 ("It is described that the coordination of the aromatic system can lead to a chain formation, wherein two metal complexes are linked by an organic compound. In this case, the aromatic compound is positioned perpendicularly or almost perpendicularly between adjacent, bridged metal complexes."); 7:48-53 ("These compounds I to XIII allow not only for the formation of two-dimensional chains, but, by virtue of their multiplicity of coordination sites, they also allow for the formation of three-dimensional networks. In this case, an organic compound coordinates to more than two metal complexes."); 11:11-16 ("In an embodiment of the organic electronic component, at least parts of the organic compounds bridge two metal complexes together, so that a chain-like structure is formed and/or at least parts of the organic compounds bridge more than two metal complexes together, so that a network-like structure is formed."); *see also id*. at 2:42-67; 11:48-52 ("By means of the corresponding selection of the metal complexes, more than one organic compound can coordinate to a metal complex, whereby chain-like and/or network-like structures are formed in the electron-conducting layer.").

116. Samsung's proposed construction encompasses both types of examples in the specification: 1) where two metal complexes are linked by an organic compound (*cf. id.* at 7:48-53); and 2) where two organic compounds are linked by a metal complex (*cf. id.* at 11:48-52).

Pictiva EX2054
Samsung v Pictiva
IPR2024-01094

Therefore, a POSITA would have understood that Samsung's proposed construction does not exclude any embodiments discussed in the specification.

117. Samsung's proposed construction is further supported by the language of claim 8, which reads: "The organic electronic component according to claim 1, wherein at least parts of the organic compounds bridge two metal complexes together, so that a chain-like structure of the metal complexes is formed and/or at least parts of the organic compounds bridge more than two metal complexes together, so that a network-like structure of the metal complexes is formed."

118. I disagree with Pictiva's proposed construction. First, it is not clear what "a structure that resembles a chain" means. This is not terminology that is commonly used in the chemistry field, and the scope is ambiguous. Second, Pictiva's proposed construction could encompass types of structures that are not described as "chain-like" in the specification. Third, the additional types of structures that Pictiva appears to attempt to include in the claim scope would not achieve the technical goals of the invention. *Id.* at 11:29-33 ("The formation of chain-like or network-like structures enables additional electrons to be able to be transferred from the metal complexes to the organic compounds, said electrons are then available for charge transport in the electron-conducting layer.").

E. <u>"network-like structure"</u>

Claim	Pictiva's Construction	Samsung's Construction
12	plain and ordinary meaning to a person of ordinary skill in the art in light of the specification, that is, "a structure that resembles a network"	"a structure where more than two metal complexes are linked by an organic compound or a structure where more than two organic compounds are linked by a metal complex"

119. As with "chain-like structure," there is no commonly-accepted meaning of "network-like structure" in chemistry. A POSITA would therefore have turned to the specification and its definition of "network-like structure." I reviewed the supporting portions of the

specification above in the context of "chain-like structure." Those same parts of the specification describe the patentee's understanding of "network-like structure." According to the specification, a "network-like structure" involves more than two metal complexes that are linked by an organic compound or more than two organic compounds that are linked by a metal complex. *E.g.*, '223 patent at 7:48-53 ("[T]hey also allow for the formation of three-dimensional networks. In this case, an organic compound coordinates to more than two metal complexes."); 10:62-64 ("[T]hey also allow for the formation of three-dimensional networks. In this case, the organic compound coordinates to more than two metal complexes."); 11:11-16 ("[A]t least parts of the organic compounds bridge more than two metal complexes together, so that a network-like structure is formed."). And as with "chain-like structure," the language of claim 8 supports Samsung's construction.

120. I disagree with Pictiva's proposed construction. As with "chain-like structure," it is not clear what "a structure that resembles a network" is, and there is no commonly-accepted concept of that in the chemistry field. Pictiva's construction would improperly encompass types of structures that are not described as "network-like" in the specification. Moreover, Pictiva's proposed construction does not make technical sense in the context of the invention and would not achieve the electron-conducting benefits that the specification ascribes to "network-like structures."

F. <u>"degree of cross-linking of the electron-conducting layer"</u>

Claims	Pictiva's Construction	Samsung's Construction
13	plain and ordinary to a person of ordinary skill in the art in light of the specification, that is, "the extent of crosslinking in the electron-conducting layer"	Indefinite

Pictiva EX2054
Samsung v Pictiva
IPR2024-01094

121. In my opinion, the ’223 patent fails to inform a POSITA with reasonable certainty of the scope of the term “degree of cross-linking of the electron-conducting layer,” and hence the scope of the claimed invention.

122. First, the sub-phrase “cross-linking of the electron-conducting layer” does not have an antecedent basis. No cross-linking is explicitly required by the base claims 10 or 12. To the extent that the “cross-linking” in the term would be considered to implicitly refer to cross-linking of a “chain-like or network-like structure,” (*cf.* ’223 patent at 13:61-64) it is not clear what the “cross-linking” is in those structures. And, it is not a given that the “cross-linking” refers to only those structures and not to the coordination of the claimed metal complex with the claimed organic compound.

123. Second, the ’223 patent fails to provide a standard or metric for measuring the “degree” of cross-linking. In this term, “degree” is, by definition, a “term of degree” standing alone, which does not have any objective standard for measurement. Among various options, the degree could be measured by 1) the absolute number of separate “chain-like or network-like structures”; 2) the percentage of “chain-like or network-like structures” as measured against the total number of coordination complexes between the metal complex and the organic compound; 3) the size (*e.g.*, molecular weight) of the “chain-like or network-like structures”; 4) the number of coordination bond or other bonds formed in the “chain-like or network-like structures”; or even 5) the number of coordination complexes formed between the claimed metal complex and the claimed organic compound. The specification does not provide sufficient guidance.

124. Third, the term “cross-linking” standing alone has a well-established meaning in chemistry, and refers to the formation of chemical bonds that connect one polymer chain to another. *See, e.g.*, McGraw-Hill Dictionary of Scientific and Technical Terms, Sixth Edition

Pictiva EX2054
Samsung v Pictiva
IPR2024-01094

(2003) (PICTSAMSUNGEDTX209894) ("crosslinking": "[org chem] The setting up of chemical links between the molecular chains of polymers."); Chambers Dictionary of Science and Technology (2007) (PICTSAMSUNGEDTX209903) ("cross-linking": "(Chem) The formation of side bonds between different chains in a polymer, thus increasing its rigidity. Usually achieved in rubbers with sulphur to give disulphidic or polysulphidic links between vicinal carbon atoms. Physical cross-links are used in thermoplastic elastomers to provide elastomeric properties. See panels on elastomers and thermosets."); A Dictionary of Chemistry, Fifth Edition (2004) (PICTSAMSUNGEDTX209908) ("cross linkage": "A short side chain of atoms linking two longer chains in a polymeric material."); Hawley's Condensed Chemical Dictionary, Fifteenth Edition (2007) (PICTSAMSUNGEDTX209912) ("cross-linking": "Attachment of two chains of polymer molecules by bridges . . . ."); Academic Press Dictionary of Science and Technology (1992) (PICTSAMSUNGEDTX209921) ("cross-linking": "Organic Chemistry. The attachment of chains of a polymer to one another to make the polymer into a single network with increased strength and resistance to solvents."); Academic Press Dictionary of Science and Technology (1992) (PICTSAMSUNGEDTX209921) ("cross-link density": "Materials Science. the density or extensiveness of chemical links that form between two polymers or between polymers and other substances.").

125. Thus, "cross-linking" is very specific to polymer chemistry. But the technology described and claimed in the '223 patent instead pertains to small molecules, which are not polymers. *E.g.*, '223 patent at cl. 1 ("joint vaporization of a metal complex, which comprises a central metal atom, with an organic compound, wherein the organic compound comprises a heteroaromatic compound which is conjugated with an aromatic compound via a C—C bond."). More broadly, the types of cross-linkages that occur between polymers are significantly different

Pictiva EX2054
Samsung v Pictiva
IPR2024-01094

from the chain-like or network-like structures described in the ’223 patent specification. The cross-linkages between polymers are in the form of “bridges” or “side bonds,” while the chain-like or network-like structures contemplated by the ’223 patent do not use those structures. *E.g.*, ’223 patent at 2:33-67; 7:48-53; 11:11-16; 11:48-52. In my opinion, a POSITA would not be able to identify any parallel “cross-link” structure in the small molecules that are covered by the ’223 patent. In other words, “cross-linking” has no meaning in the context of the ’223 patent, and certainly no parallel meaning implied by the usage of that term in polymer chemistry.

126. I also disagree with Pictiva’s proposed construction. First, it is not clear what “the extent of crosslinking in the electron-conducting layer” means, or how it would be measured. Second, Pictiva’s proposed construction simply replaces “degree” with “extent” without providing any clarity on the scope of the term. Third, the same measurement problems that are present with “degree” that I listed above would also apply to “extent.”

VIII. <u>’164 Patent Terms</u>

A. <u>“matrix”</u>

Claims	Pictiva’s Construction	Samsung’s Construction
1-6, 10, 13-16	plain and ordinary meaning to a person of ordinary skill in the art in light of the specification	“a continuous phase of the mixture of matrix materials”

127. In my opinion, “matrix” in the ’164 patent claims should be construed as “a continuous phase of the mixture of matrix materials.”

128. The specification consistently describes the matrix as a mixture of the three constituent matrix materials. *E.g.*, ’164 patent at 3:20-21 (“Thus, the concentration of a matrix material in the mixture of several matrix materials plays a role.”); 3:31-33 (“the mobility of electrons and holes in the matrix, which has at least three matrix materials”); 4:24-26 (“Each of these layers can have a matrix, which has at least a first, a second, and a third matrix material.”);

4:39-41 ("Depending on which charge carrier type is to have a higher mobility, the matrix can contain a higher concentration of the individual matrix material."); 6:54-56 ("Both the emission layer 30 and also the electron transport layer 32 and the hole transport layer 31 can have matrices which are composed of three or more matrix materials."); 8:52-55 ("the compilation of the first, second, and third matrix material for the matrix"). Thus, the specification is consistent in describing each matrix material as being mixed throughout the matrix.

129. A POSITA would understand that one of the main functions of a matrix as described in the '164 patent is to facilitate light emission from the emitter material housed in the matrix. To be effective, a matrix needs to be in a continuous phase to not only encourage the efficient transport of electrons and holes through, *e.g.*, the electron transporting material and hole transporting material in the matrix, but to also ensure the desired distribution and stable housing of the emitter material. Given that the claimed matrix is composed of a "mixture of matrix materials," the mixture needs to form a continuous phase. That is, the multiple matrix materials would together form a mixed matrix—a connected structure that holds, e.g., the emitter material. The advantage of a mixed matrix is that some of the matrix materials can function as charge transport materials to improve the ability of the emitter material to produce light.

130. The extrinsic evidence also supports Samsung's construction. As one example, A Dictionary of Chemistry, Fifth Edition (2004) defines "matrix" as "(in chemistry) A continuous solid phase in which particles (atoms, ions, etc.) are embedded."). PICTSAMSUNGEDTX209934. Similarly, Chambers Dictionary of Science and Technology (2007) defines "matrix" as "(BioSci) More or less continuous matter in which something is embedded . . . ."). PICTSAMSUNGEDTX209937; *see also* Pictiva's Patent Owner Preliminary Response in IPR2024-01093, at 2-3 (citing these definitions); *see also id.* at 9.

Pictiva EX2054
Samsung v Pictiva
IPR2024-01094

131. I additionally understand that Pictiva's expert in IPR2024-01093, Dr. Sims, made the following statement: "In the context of the '164 patent, a matrix material would be part of the continuous phase in a given organic layer . . . ." Declaration of Dr. Marc Sims in IPR2024-01093, Ex. 2001, ¶ 37.

B. <u>"matrix material"</u>

Claims	Pictiva's Construction	Samsung's Construction
1-6, 10, 13-16	plain and ordinary meaning to a person of ordinary skill in the art in light of the specification	The first, second, and third matrix materials are different materials and are part of the same matrix.

132. In my opinion, "matrix material" should be construed to require that the claimed first, second, and third matrix materials are different materials and are part of the same matrix.

133. The claimed matrix materials must be different materials. Each matrix material is described as performing a particular role—*e.g.*, hole transport, electron transport, or high band gap. *E.g.*, '164 patent at 2:32-36 ("The first matrix material can be an Ultra Wide Band Gap (UGH) material, which has a band gap that is large in comparison to the other matrix materials."); 2:50-52 ("Thus, the second matrix material, which has a higher HOMO than the third matrix material, is more suitable as the hole transport material than the third matrix material."); 2:55-57 ("Thus, the third matrix material, which has a lower LUMO than the second matrix material, is suitable as the electron transport material."); 3:21-26 ("The first matrix material, which in comparison to the second and third matrix material has the largest band gap and the smallest charge carrier mobility, can be used to adjust the concentration of the second and the third matrix material separately from one another."). The listed goals of the invention rely on the three matrix materials working in concert, but having particular electrical properties, in order to improve charge carrier transport. *E.g.*, '164 patent at 1:33-36 ("One object of the invention is to provide an electronic device with an improved charge carrier transport and an improved charge carrier balance in the

Pictiva EX2054
Samsung v Pictiva
IPR2024-01094

organic layers and thus an increased efficiency."); 8:52-55 ("The relative ratio of the LUMOs and HOMOs of the three combined materials and their position to one another is important in the compilation of the first, second, and third matrix material for the matrix.").

134. The electrical properties of the three matrix materials are reflected in the claim limitations requiring a specific relationship of HOMO and LUMO levels between the three matrix materials. The claims require HOMO and LUMO levels "energetically lower than" and "energetically higher than" other levels.

135. Moreover, the specification explicitly describes the three matrix materials as different. '164 patent at 1:55-59 ("Thus, an electronic device is made available which comprises more than two different matrix materials in an organic functional layer. Three different matrix materials can be present thereby, and depending on the need, more than three also."). I further note that the specification's reference to selecting matrix materials "similarly or differently" in 4:26-28 is referring to whether different layers (with their own matrices and matrix materials) can use the same materials as ***other layers***, not whether the three matrix materials present in a single given layer can be the same.

136. The claimed matrix materials must be part of the same matrix. A POSITA would have recognized that the claim itself requires this via the language "wherein the at least one organic functional layer has at least a first matrix material, a second matrix material, and a third matrix material." Thus, all three matrix materials are part of the same organic functional layer (which has a matrix). *Cf.* '164 patent at 4:24-26 ("Each of these layers can have a matrix, which has at least a first, a second, and a third matrix material."). Additionally, the specification describes the three matrix materials as being part of (and forming) the same matrix. *E.g.*, *id.* at 3:31-33 ("the mobility of electrons and holes in the matrix, which has at least three matrix materials"); 4:39-41

Pictiva EX2054
Samsung v Pictiva
IPR2024-01094

("Depending on which charge carrier type is to have a higher mobility, the matrix can contain a higher concentration of the individual matrix material."); 6:54-56 ("Both the emission layer 30 and also the electron transport layer 32 and the hole transport layer 31 can have matrices which are composed of three or more matrix materials."); 8:52-55 ("the compilation of the first, second, and third matrix material for the matrix").

137. Additionally, a POSITA would have recognized that the invention does not make technical sense unless the three matrix materials are present in the same matrix such that they may electrically interact. The three matrix materials are chosen based on specific HOMO and LUMO values ***in relation to each other***. These HOMO and LUMO criteria would not make sense if one of the matrix materials could be in a different matrix, such that it was physically separate from the other matrix materials and therefore could not interact electrically with them. *E.g.*, *id.* at 5:3-6 ("By the adjustment of the charge carrier mobility with the aid of the three matrix materials, it is possible to purposefully influence the position of the recombination zone in an emission layer.").

C. "charge carrier mobility"

Claims	Pictiva's Construction	Samsung's Construction
4, 16	plain and ordinary meaning to a person of ordinary skill in the art in light of the specification, that is, hole mobility (for a hole transport material) and/or electron mobility (for an electron transport material)	Indefinite

138. In my opinion, the '164 patent fails to inform a POSITA with reasonable certainty of the scope of the term "charge carrier mobility," and hence the scope of the claimed invention. The principal reason for this is that the charge carrier mobility is highly dependent on the surrounding environment and is not an intrinsic property of a material. But the '164 patent claims treat it as such. *E.g.*, '164 patent at cl. 4 ("the first matrix material has a charge carrier mobility

Pictiva EX2054
Samsung v Pictiva
IPR2024-01094

which is lower than the charge carrier mobilities of the second and third materials."). This is not true for several reasons.

139. First, environmental factors like temperature and humidity can alter the molecular packing of the organic semiconducting materials. As one example, humidity can cause swelling of the organic layers. As another example, temperature fluctuations can lead to thermal expansion or contraction. These structural changes affect the intermolecular distances of the claimed matrix materials. The intermolecular spacing directly affects the overlap of π-orbitals. In turn, changes in orbital overlap influence the hopping transport mechanism that carriers use to move through the material. Better orbital overlap generally leads to higher mobility. Indeed, the '164 patent specification concedes that the molecular spacing directly influences charge carrier mobility. '164 patent at 3:17-21 ("The mobility of electrons and holes can depend on the molecule distance—that is, the average distance between charge carrier-transporting molecules in the individual matrix material. Thus, the concentration of a matrix material in the mixture of several matrix materials plays a role.").

140. Second, the presence of dopant/guest molecules changes the electronic structure around the matrix molecules. This affects the overlap between molecular orbitals in the transport pathway. Importantly, energy levels of the matrix material can shift due to these interactions. The degree of electronic coupling impacts how easily charges can move. Some dopants may create new pathways for charge transport. Other dopants may block existing transport channels.

141. Third, the relative HOMO/LUMO levels of surrounding materials influence charge transfer. For example, energy barriers at interfaces affect injection and transport of holes and electrons. Furthermore, local polarization effects from nearby molecules modify energy landscapes. These energetic factors directly impact carrier mobility.

Pictiva EX2054
Samsung v Pictiva
IPR2024-01094

142. Last, the phenomenon known as "charge trapping" confirms that charge carrier mobilities are not intrinsic to particular types of matrix materials. Surrounding molecules can act as trap sites. Trap sites are locations with lower energy states than the normal transport path. The distribution and depth of these traps affects overall mobility. Charge carriers (electrons/holes) normally move through the material by hopping between molecules. When a charge encounters a trap, it falls into this lower energy state—extra energy is needed for the charge to escape and continue moving. This reduces the overall mobility since carriers spend time stuck in traps. The traps can be shallow, requiring only small amounts of energy to release carriers, or they can be deep, needing significant energy to free the trapped charge.

143. For at least these reasons, a POSITA would not be able to accurately assess whether a given material in isolation has a greater or lesser charge carrier mobility than another given material. Because claims 4 and 6 treat the charge carrier mobility as an immutable parameter of a material, the '164 patent fails to apprise a POSITA with reasonable certainty of the scope of those claims.

144. I have considered the part of the specification that states "the individual mobilities of the charge carriers are indicated in m2/Vs for the various line forms; they fluctuate between 10-8 to 10-12." '164 patent at 7:7-10. Various terms in that excerpt appear to be incorrectly formatted because they are not presented in superscript. Even if the excerpt had been correctly formatted, it would not have informed a POSITA of the scope of a "charge carrier mobility" with reasonable certainty.

145. I have further considered the specification's statement at 3:35-52 that "the mobility can be determined in the following manner" according to a formula from "Miller and Abraham." '164 patent at 3:35-52. The formula reproduced in the specification is particular to the "mobility"

Pictiva EX2054
Samsung v Pictiva
IPR2024-01094

at "a localized state" and "between places i and j." The formula confirms that a "charge carrier mobility" is not an intrinsic property of a material. I additionally note that the mobility formula fails to account for several circumstances (as I described above) that could affect the ultimate mobility, and is therefore not accurate.

146. Other than these sections, the specification does not explain the nature of a "charge carrier mobility," or purport to provide a custom definition. The defects in the claimed usage of "charge carrier mobility" are not corrected or addressed by the specification.

147. I additionally note that Pictiva appears to agree that the "charge carrier mobility" is not a property intrinsic to a material, although it confuses "charge transport" and "charge carrier mobility." *See, e.g.*, Pictiva's Patent Owner Preliminary Response in IPR2024-01093, at 1 ("[C]harge transport depends on both charge carrier mobility and the number of charge carriers present . . . ."); Declaration of Dr. Marc Sims in IPR2024-01093, Ex. 2001, at ¶ 44 ("There are indeed many factors that influence charge carrier mobilities in organic semiconductors . . . .").

148. I conclude that "charge carrier mobility" and the claims that specify it are indefinite.

D. <u>"A method for the production of an electronic device according to claim 1, comprising the steps of:"</u>

Claims	Pictiva's Construction	Samsung's Construction
13	plain and ordinary meaning to a person of ordinary skill in the art in light of the specification, that is "a method for producing an electronic device that has the properties according to claim 1, the method of production includes, but is not limited to, the steps of …."	Indefinite

149. In my opinion, a POSITA reading claim 13 would not be able to understand the intended scope of the claim, and in particular whether the claim is directed to both method steps and apparatus limitations. Asserted claim 1 is an apparatus claim and includes limitations about

Pictiva EX2054
Samsung v Pictiva
IPR2024-01094

the structure and components of a claimed electronic device. *E.g.*, '164 patent at cl. 1 ("a first electrode"). Asserted claim 13, which purports to depend from claim 1, is a method claim that contains method steps. *E.g.*, *id.* at cl. 13 ("C) placement of at least one organic functional layer between the first electrode and the second electrode, wherein ***in method step C*** . . . .") (emphasis added). It would not have been clear to a POSITA whether each structural limitation must be present in the device, in addition to requiring the method steps to be performed, in order to practice claim 13. Because the type classification of the claim is unclear, a POSITA would not be informed, with reasonable certainty, about the scope of the invention.

150. I disagree with Pictiva's proposed construction because it materially rewrites the claim language in a way that does not follow from the language itself. For example, it replaces "an electronic device according to claim 1" with "an electronic device that has the properties according to claim 1." But claim 1 includes structures that are not "properties," such as "a substrate" and "a first electrode." To the extent that Pictiva's proposed construction attempts to eliminate or read out requirements present in claim 1, the construction is inappropriate. Additionally, Pictiva's proposed construction does not address the mixing of apparatus and method claim types.

IX. '492 Patent Terms

A. "applied in a structured fashion" and "applying . . . in a structured fashion"

Term	Pictiva's Construction	Samsung's Construction
"applied in a structured fashion" (cls. 9, 10, 16)	plain and ordinary meaning to a person of ordinary skill in the art in light of the specification. For example, the '492 patent discloses"[t]he fact that the dielectric and/or the electrode layer and/or subsequently further layers or materials are 'applied in a structured fashion' means, in various embodiments, that the desired structure	"applied such that the desired structure is already formed during the application of the corresponding layer, in contrast to planar application of the corresponding layers and subsequent structuring of the layers, as is the case for

	is already formed during the application of the corresponding layer. The area to be coated is thus coated only in partial regions dependent on the desired structure." '492, 1:66-2:4.	example in a photolithographic method."
"applying . . . in a structured fashion" (cls. 1, 10)	plain and ordinary meaning to a person of ordinary skill in the art in light of the specification. For example, the '492 patent discloses"[t]he fact that the dielectric and/or the electrode layer and/or subsequently further layers or materials are 'applied in a structured fashion' means, in various embodiments, that the desired structure is already formed during the application of the corresponding layer. The area to be coated is thus coated only in partial regions dependent on the desired structure." '492, 1:66-2:4.	"applying such that the desired structure is already formed during the application of the corresponding layer, in contrast to planar application of the corresponding layers and subsequent structuring of the layers, as is the case for example in a photolithographic method."

151. I understand that a patentee can act as his own lexicographer, that is, the patentee can set out a definition of a claim term in the patent itself. The patentee did so for the term "applied in a structured fashion"; the patentee set out in detail the meaning of that term in the context of the patent. Specifically, the patent specification states:

> "The fact that the dielectric and/or the electrode layer and/or subsequently further layers or materials are 'applied in a structured fashion' means, in various embodiments, that ***the desired structure is already formed during the application of the corresponding layer. The area to be coated is thus coated only in partial regions dependent on the desired structure.***
>
> ***This is in contrast to planar application of the corresponding layers and subsequent structuring of the layers, as is the case for example in a photolithographic method.*** The structured application of the layers makes it possible to be able to dispense with the firstly planar application of the corresponding layers and the subsequent complex structuring of the layers, for example the photolithographic method, and/or an expensive photoresist for the photolithographic method. This contributes to simple and/or cost-effective production of the passive electronic component."

'492 patent at 1:65-2:14 (emphasis added).

Pictiva EX2054
Samsung v Pictiva
IPR2024-01094

152. Therefore, in my opinion, a POSITA would understand the term "applied in a structured fashion" to mean what the patent says it means. In the context of the term "applying . . . in a structured fashion," used in claims 1 and 10, I can discern no substantive difference, in the context of the intrinsic record, between the claim term "applied in a structured fashion" and the claim term "applying . . . in a structured fashion." Thus, I understand them to mean the same thing (other than the grammatical difference).

B. <u>"optoelectronic component"</u>

Claim	Pictiva's Construction	Samsung's Construction
10	plain and ordinary meaning to a person of ordinary skill in the art in light of the specification, that is, an electrical or electronic component for detecting, sensing, generating, interconverting, modulating, transmitting, responding to, controlling or otherwise interacting with light or optical signals.	"An electrical or electronic component that converts optical energy into electrical energy, converts electrical energy into optical energy, or both"

153. In my opinion, at the time of the claimed invention, and in light of the intrinsic record as a whole, a POSITA would understand the term "optoelectronic component" in claim 10 of the '492 patent to mean: "An electrical or electronic component that converts optical energy into electrical energy, converts electrical energy into optical energy, or both." This understanding is consistent with the intrinsic record, as discussed further below, and with the general understanding of a POSITA of the term at the time of the claimed invention.

154. In order to understand the scope of the claims in the '492 patent, a POSITA would have to consider how to interpret the term "optoelectronic component," as well as how to interpret the term "passive electronic component," and how the two terms are different from one another. For example, claim 14 requires "the passive electronic component and the optoelectronic

component are connected in series via the second contact region." Further, claim 10 of the '492 patent requires a "passive electronic component" and it separately requires that a certain "dielectric demarcates a component region for forming an optoelectronic component." In the specification of the patent, an overview of potential embodiments specifically references the embodiments' separate use of "optoelectronic components" and "passive electronic components." *See* '492 patent at 20:5-15 ("The disclosure is not restricted to the embodiments indicated. By way of example, it is possible to produce more than one, for example two, three or more passive electronic components and/or optoelectronic components, for example connected in series or in parallel, in particular without carrying out a photolithographic process and/or with only one etching process. Furthermore, it is possible to combine one, two or more passive electronic components with the optoelectronic component or the optoelectronic components, for example electrically in series one after the other and/or in parallel with one another.").

155. Thus, a POSITA would understand the patent to characterize "optoelectronic components" and "passive electronic components" in contradistinction to one another, and the patent claims require these two types of components separately. Therefore, in my opinion, a POSITA's understanding of the scope of the claims of the '492 patent, including claim 10, depends on a POSITA's understanding of the meaning of the term "optoelectronic component" and of the term "passive electronic component" (discussed separately below).

156. The term "optoelectronic component" is a well-understood term in the art. A number of technical dictionaries contain definitions of the term (or related terms). *See, e.g.*, Wiley Electrical And Electronics Engineering Dictionary; Steve M. Kaplan; John Wiley & Sons, Inc., 2004 ("optoelectronic device Also spelled opto-electronic device. 1. A device which converts optical energy into electrical energy. Also, a device which converts an optical signal into an

Pictiva EX2054
Samsung v Pictiva
IPR2024-01094

electrical signal. An example is a photodiode. 2. A device which converts electrical energy into optical energy. Also, a device which converts on electrical signal into an optical signal. An example is an LED. 3. A device, such as a laser, which combines optics and electronics.”). A POSITA would understand the term “optoelectronic component” to have this definition. In my opinion, the first definition is the most representative of how the term is used in the claims of the ’492 patent. Other dictionary definitions around the time contain similar definitions. *See* McGraw-Hill Dictionary Of Scientific And Technical Terms, Sixth Edition, The McGraw-Hill Companies, Inc., 2003 (“optoelectronics [ELECTR] 1. The branch of electronics that deals with solid-state and other electronic devices for generating, modulating, transmitting, and sensing electromagnetic radiation in the ultraviolet, visible-light, and infrared portions of the spectrum.”); A Dictionary of Physics, Fifth Edition, Oxford University Press, 2005 (“optoelectronics The branch of *electronics concerned with electronic devices (frequently solid-state devices) for generating, transmitting, modulating, and detecting *electromagnetic radiation, especially at optical, ultraviolet, and infrared frequencies.”); A Dictionary of Electronics and Electrical Engineering (Oxford Quick Reference) by Andrew Butterfield, John Szymanski (“optoelectronics[:] The study and design of electronic devices that manipulate light in some way. These range from photodetectors that convert light into electricity to semiconductor lasers and *light-emitting diodes. The underlying theory is largely based on the principles of quantum physics. See also optical electronics.”).

157. In my opinion, when reading the claim term “optoelectronic component” in the ’492 patent, in light of the ’492 patent and the intrinsic record as a whole, a POSITA would understand the patent to use the term in a way consistent with its generally accepted usage among people of ordinary skill in the art at the time of the claimed invention. Although the patent does

Pictiva EX2054
Samsung v Pictiva
IPR2024-01094

not expressly define the term "optoelectronic component," the patent's many references to examples of optoelectronic components, and its references to functions of or structures of optoelectronic components, are consistent with how a POSITA would understand the term "optoelectronic component" at the time of the claimed invention.

158. Claim 13 describes, to some degree, steps for forming an "optoelectronic component" as contemplated by the '492 patent. *See* '492 patent at cl. 13 ("The method as claimed in claim 11, wherein a first electrode of an optoelectronic component is formed by the first electrically conductive layer between the optically functional layer and the substrate and a second electrode of the optoelectronic component is formed by the electrode layer on a side of the optically functional layer facing away from the first electrode, wherein the optoelectronic component comprises the organically functional layer between the first and second electrodes of the first optoelectronic component."). Embodiments addressed in the specification disclose similar contemplated optoelectronic devices. *See, e.g.*, '492 patent at 6:23-31.

159. The specification of the '492 patent also discloses a number of examples of optoelectronic devices. *See, e.g.*, '492 patent at 4:46-63 ("An optoelectronic component can be for example a component which absorbs or emits electromagnetic radiation. A component which absorbs electromagnetic radiation can be a solar cell, for example. In various embodiments, a component which emits electromagnetic radiation can be a semiconductor component which emits electromagnetic radiation and/or can be embodied as a diode which emits electromagnetic radiation, as an organic diode which emits electromagnetic radiation, as a transistor which emits electromagnetic radiation or as an organic transistor which emits electromagnetic radiation. The radiation can be for example light in the visible range, UV light and/or infrared light. In this connection, the component which emits electromagnetic radiation can be embodied for example

Pictiva EX2054
Samsung v Pictiva
IPR2024-01094

as a light emitting diode (LED) as an organic light emitting diode (OLED), as a light emitting transistor or as an organic light emitting transistor. In various embodiments, the light emitting component can be part of an integrated circuit."); 8:31-48; *id.* 15:9-12 ("The optoelectronic component can be for example a component which emits electromagnetic radiation, for example a light emitting component **100**, for example in the form of an organic light emitting diode.").

160. In my opinion, understanding the term "optoelectronic component" to mean, "an electrical or electronic component that converts optical energy into electrical energy, converts electrical energy into optical energy, or both," reflects the full, broad scope of the term as it is used in the '492 patent.

C. <u>"passive electronic component"</u>

Claims	Pictiva's Construction	Samsung's Construction
1, 10, 16	For claims 1 and 16, the preamble is not limiting; For claim 10, plain and ordinary meaning to a person of ordinary skill in the art in light of the specification, that is, "an electronic component that is not active"	"an electronic component, such as a capacitor or a resistor, that is neither active nor an optoelectronic component"; phrase is limiting to the extent it is in a preamble.

161. Based on the parties' proposed constructions, there appears to be no dispute that a "passive electronic component" is not an active component. Further, the '492 patent clearly states that a capacitor or a resistor is an example of a "passive electronic component" and I do not understand there to be any dispute about that. *See* '492 patent at 2:20-21 ("A passive electronic component can be for example a capacitor and/or a resistor or a combination. . . .").

162. Thus, I understand that the only issue in dispute is whether a passive electronic component can be an optoelectronic component.

163. In my opinion, a POSITA would understand the term "passive electronic component" in claims 1, 10, and 16 of the '492 patent to not encompass an optoelectronic

Pictiva EX2054
Samsung v Pictiva
IPR2024-01094

component. In my opinion, the claim term "passive electronic component" in claims 1, 10, and 16 of the '492 patent would mean, to a POSITA, "an electronic component, such as a capacitor or a resistor, that is neither active nor an optoelectronic component."

164. Throughout the intrinsic record, including in the claims and the specification, the '492 patent distinguishes between a "passive electronic component" and an "optoelectronic component." For example, the '492 patent is titled, "Method for producing a passive electronic component, method for producing an optoelectronic assembly and passive electronic component"; the specification, in turn, states: "An optoelectronic assembly may include for example a passive electronic component and one, two or more optoelectronic components." '492 patent at 8:29-31. S*ee* discussion of the term "optoelectronic component" (above); *see also id.* at 20:5-15; 4:35-41.

165. The claims in the '492 patent recognize the patent's distinction between passive electronic components and optoelectronic components. For example, claim 1 is directed to a "method for producing a passive electronic component," while claim 13 is directed to a method for forming an "optoelectronic component," and claim 14 covers "The method as claimed in claim 13, wherein the passive electronic component and the optoelectronic component are connected in series via the second contact region." Allowing a passive electronic component to be an optoelectronic component would render claim 14 unintelligible because it would not distinguish between the passive electronic component and the optoelectronic component. I understand that claims should be interpreted to avoid rendering them unclear to a POSITA.

166. The '492 patent discloses details about what passive electronic components are and how they are formed; it similarly discloses details about what optoelectronic devices are and how they are formed. *See, e.g.,* '492 patent at 8:31-34 ("An optoelectronic component may include for example a component which absorbs electromagnetic radiation and/or a component which emits

Pictiva EX2054
Samsung v Pictiva
IPR2024-01094

electromagnetic radiation."); cl. 13 ("the optoelectronic component comprises the organically functional layer between the first and second electrodes of the first optoelectronic component"). Despite the patent's detail about passive electronic components and optoelectronic components, there is no disclosure, or suggestion, in the patent of any passive electronic component that could be an optoelectronic component. Interpreting "passive electronic component" to include at least some "optoelectronic devices" would render the claim language, including for claims 1, 10, and 16, indefinite, because the claims, read in light of the patent as a whole, relies on a distinct understanding of "passive electronic component" and "optoelectronic component."

167. The language of claim 10 clearly indicates that a passive electronic component cannot be an optoelectronic component. Claim 10 requires a "passive electronic component," comprising several enumerated substructures. Claim 10 also requires "applying the dielectric in a structured fashion to the second layer such that the dielectric demarcates a component region for forming an optoelectronic component." By referencing a "region for forming ***an*** optoelectronic component," the claim language implies that no optoelectronic component had been referenced so far in the claim (otherwise the claim would have referenced "***the*** optoelectronic component" or "***another***" optoelectronic component). However, claim 10 had already, of course, described a passive electronic component, without any indication that the passive electronic component could also be the later-referenced "optoelectronic device." Therefore, the language of claim 10 implies that a passive electronic component cannot be an optoelectronic component.

D. <u>"plurality of capacitors and/or resistors"</u>

Claim	Pictiva's Construction	Samsung's Construction
6	plain and ordinary meaning to a person of ordinary skill in the art in light of specifications, that is, "more than one capacitor and/or resistor"	Indefinite

Pictiva EX2054
Samsung v Pictiva
IPR2024-01094

168. In my opinion, the term "plurality of capacitors and/or resistors," read in the context of the patent and its prosecution history, fails to provide a POSITA with reasonable certainty of the scope of the invention in claim 6. The language of claim 6, read together with the claim it depends from (claim 2) is, on its face, not comprehensible by a POSITA and thus fails to apprise a POSITA with reasonable certainty of the scope of the claim. Claim 6 states: "The method as claimed in claim 2, wherein a plurality of capacitors and/or resistors are formed electrically in parallel with one another and/or electrically in series one after another." Thus, claim 6 requires carrying out the method in claim 2 in a way that capacitors or resistors (or both) are formed in parallel with one another or in series one after another. Claim 2, in turn, addresses a method to form a capacitor, but it does not address a method to form a resistor (nor does the claim it depends from—claim 1). Thus, a POSITA has no way of discerning, based on the claim language, how claim 2 could possibly be carried out such that resistors are formed in parallel with or in series with other components, because claim 1, claim 2, and claim 6 nowhere disclose how resistors are to be formed under the "method as claimed in claim 2" at all. Thus, the language in claim 6 is unclear on its face and fails to apprise a POSITA of the scope of the claim (or how the claim can be carried out at all).

169. Reading claim 6 in connection with the prosecution history confirms that the language in claim 6 fails to provide reasonable certainty about the scope of the claim, and the prosecution history makes clear why the claim cannot be understood in its present form. In a March 25, 2015 preliminary amendment from the applicants of the '492 patent, the applicants stated that "Claims 3, 6-10, 13, and 15 have been amended to remove multiple dependence." Preliminary Amendment at 10. The content of the amendment shows that claim 6 previously stated: "The method as claimed in any of the preceding claims wherein two, three or more

Pictiva EX2054
Samsung v Pictiva
IPR2024-01094

capacitors and/or resistors are formed electrically in parallel with one another and/or electrically in series with one another." *Id.* at 5. Prior to the amendment, claim 2 addressed a method for forming a capacitor, and claims 3-5, together, addressed methods for forming a resistor. In this pre-amendment context, claim 6 depended on a set of claims that disclosed a method for forming a capacitor and a method for forming a resistor; thus, performing those methods "wherein two, three or more capacitors and/or resistors are formed in parallel with one another and/or electrically in series with one another" was comprehensible by a POSITA. However, in its amended form, claim 6 depends on a method for forming a resistor, but no such method for forming a resistor is referenced in any of the relevant claim language.

170. Thus, the applicants for the '492 patent rendered claim 6 unclear and ambiguous when they revised the claim to make it depend only on claim 2 (which concerns a method for forming a capacitor) instead of claim 6 depending on claims 1-6 (which, together, concern methods for forming a capacitor and for forming a resistor). In my opinion, a POSITA cannot make sense of the scope of the asserted claim 6, nor could a POSITA understand what the above-discussed amendment to claim 6 accomplished (or was meant to accomplish).

E. "a resistance region . . . which has a taper in a direction parallel to the electrically conductive layers"

Claim	Pictiva's Construction	Samsung's Construction
3	plain and ordinary to a person of ordinary skill in the art in light of the specification, that is, "a resistance region which has a shape that gradually narrows in a direction parallel to the electrically conductive layers"	Indefinite

Pictiva EX2054
Samsung v Pictiva
IPR2024-01094

171. Claim 3 requires: "The method as claimed in claim 1, wherein, before the dielectric is applied, a second trench and at least one third trench are formed, which delimit a resistance region, which comprises a part of the first and second electrically conductive layers and which has a taper in a direction parallel to the electrically conductive layers. . . ."

172. For purposes of the claim term at issue, the "resistance region" is required to have "a direction parallel to the electrically conductive layers." As a POSITA, reading this claim term in light of the patent as a whole, together with the prosecution history, it is my opinion that this claim does not provide reasonable certainty to a POSITA of the scope of the invention. While the crux of the claim limitation at issue is that the taper of the resistance region must be oriented in a certain direction, it is impossible to discern what direction is within versus not within the scope of the claimed invention.

173. Figure 10 depicts one orientation of the taper:

Fig. 10

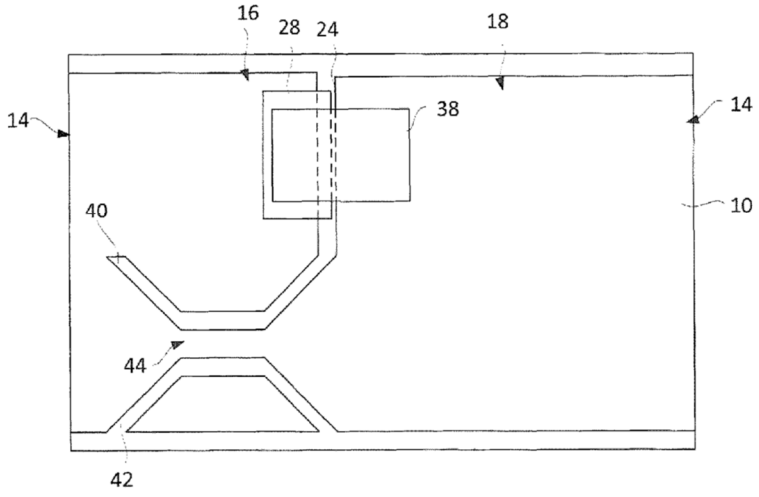

174. The associated explanation in the specification states: "FIG. 10 shows a plan view of one embodiment of a passive electronic component which includes for example the capacitor explained above. The passive electronic component includes for example the second trench **40** and

Pictiva EX2054
Samsung v Pictiva
IPR2024-01094

the third trench **42**, in which the substrate **10** is exposed. The second and third trenches **40**, **42** can demarcate the resistance region **44**, for example, which has the taper. The resistance region **44** can lead for example into the first contact region **16**, on the one hand, and into the second contact region **18**, on the other hand." '492 patent at 13:1-14.

175. The "resistance region" is a region of the electrically conductive layers, as described in the language of claim 3. Thus, the resistance region is both a part of the electrically conductive layers ***and*** it must contain a taper that is parallel to those layers. The patent and prosecution history nowhere clarify how it can be determined whether the taper is "parallel" to the layers or not, nor is it comprehensible to a POSITA how such a determination can be made, in the context of the patent. Because the resistance region is formed from the electrically conductive layers, it must be in the same plane as the electrically conductive layers. Further, because the resistance region is in the same plane as the electrically conductive layers, the line that forms the direction of the resistance region's taper must be part of the plane that forms the electrically conductive layers. Thus, the claim limitation that the resistance region's taper must be parallel to the electrically conductive layers means that the line defining the taper's direction (which is in the electrically conductive layers) must be parallel to the plane of the electrically conductive layers. There is no understood concept in the art that would allow a POSITA to discern what direction would satisfy the claim limitation of the taper being "parallel" to the electrically conductive layers versus not "parallel" to the electrically conductive layers in this context. When a line lies in a plane, whether that line is parallel to or not parallel to that plane is not a meaningful distinction.

176. To make an analogy, if a circular pizza is sliced twice, once vertically and once horizontally, the top-right slice will be made of the pizza layers (like the resistance region is made of the electrically conductive layers) and it will have a taper (from the crust of the pizza in to the

Pictiva EX2054
Samsung v Pictiva
IPR2024-01094

center). However, requiring that the taper of the pizza slice be in a direction "parallel" to the layers of the pizza does not make sense. The pizza slice can be rotated in any direction and the direction of the slice's taper is still equally "parallel to" (or "not parallel to") the layers of the pizza.

177. Thus, there is no way for a POSITA to determine with reasonable certainty the scope of claim 3.

178. More specifically, there are two ways to look at whether the line of the taper's direction is parallel to the plane of the electrically conductive layers, of which that line is a part. First, geometrically, a line that is part of a plane is not typically considered "parallel" to that plane because the line instead lies within the plane. According to this understanding, there is no way for the taper to have a direction that is parallel to the electrically conductive layers because that direction is in the layers rather than parallel to the layers, and thus there is no way for the relevant claim limitation to be satisfied. Second, one could argue that the line of the taper's direction is parallel to the electrically conductive layers because, for example, the direction can be indicated by a line above those layers (like how a minute hand on a clock indicates a direction on the clockface, while being parallel to and above the clockface). Under this understanding, the claim limitation does not make sense because any direction of the taper would be equally parallel to (or not parallel to) the electrically conductive layers, and thus the substance of the claim limitation cannot be resolved.

179. I wish to note that it is common to define mathematical planes by their surface-normal vector. Accordingly, the direction of the vector associated with the plane is directed along the direction normal (perpendicular) to the plane. Applying this principle to a layer would associate a surface-normal direction with the layer. This creates ambiguity when determining the direction of a layer in this context.

Pictiva EX2054
Samsung v Pictiva
IPR2024-01094

F. <u>"second trench" and "third trench"</u>

Term	Pictiva's Construction	Samsung's Construction
"second trench" (cl. 3)	plain and ordinary meaning to a person of ordinary skill in the art in light of the specification, where the recited first/second/third trench need not be different in properties	"second trench in the first or second electrically conductive layer, or in both such layers."
"third trench" (cl. 3)	plain and ordinary meaning to a person of ordinary skill in the art in light of the specification, that is, where the recited first/second/third trench need not be different in properties	"third trench in the first or second electrically conductive layer, or in both such layers."

180. Claim 1 contains the term "first trench," and the claim language specifies, to some degree, in what material and where that "first trench" is to be formed. Specifically, claim 1 requires: "forming a ***first trench*** in the first and second electrically conductive layers such that the substrate is exposed in the ***first trench***, wherein the ***first trench*** separates a first contact region from a second contact region." '492 patent at cl. 1 (emphasis added).

181. Further, the specification sets forth how the first trench can "delimit" one region of the disclosed structure from another: "The first trench 24 separates a first contact region 16 from a second contact region 18. The first trench 24 can be part of a trench structure, which partly or completely delimit for example the first and/or second contact region 16, 18 in the planes of the two electrically conductive layers 12, 14." '492 patent at 11:40-44 (referring to Figure 4, below).

Fig. 4

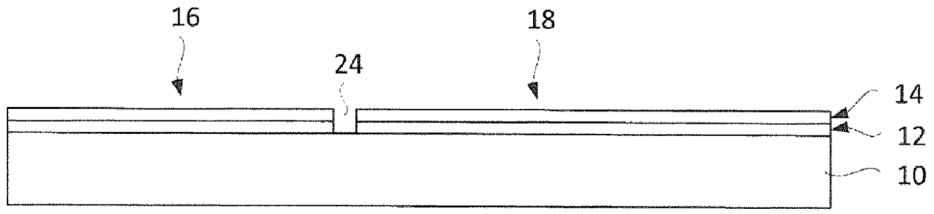

Pictiva EX2054
Samsung v Pictiva
IPR2024-01094

182. Claim 3 states: "The method as claimed in claim 1, wherein, before the dielectric is applied, a ***second trench*** and at least one ***third trench*** are formed, which delimit a resistance region, which comprises a part of the first and second electrically conductive layers." '492 patent at cl. 3 (emphasis added). In my opinion, the language of claim 1 and claim 3, read in the context of the rest of the intrinsic record, requires that the second and third trench each be in either first electrically conductive layer, the second electrically conductive layer, or both. This is in contrast to the second and third trench being in some material other than the first or second electrically conductive layers; I do not understand this to be possible under the language of the specification and the claims.

183. First, the language at the beginning of claim 3 requires the second and third trench to be in the first and second electrically conductive layers (or both). The second and third trench are to be formed "before the dielectric is applied" in claim 1. Claim 1, in turn, refers to only three structures or materials "before the dielectric is applied": (1) a first electrically conductive layer; (2) a second electrically conductive layer; and (3) a substrate. Thus, these three materials are the only disclosed materials in which the second trench and third trench could possibly be formed. According to the disclosures in the patent, the second and third trenches are to be formed in the first and second electrically conductive layers, and not in the substrate. The patent and prosecution history nowhere suggest that any trenches would (or could) be made in the substrate, and indeed, making the second or third trench in the substrate would be contrary to the understanding of a POSITA in the context of the patent and the prosecution history. The purpose of the trenches, in the claimed invention, is to create electrical separation between portions of the first and second electrically conductive layers (*see* Figure 4, and associated discussion, above), and all disclosed embodiments in the '492 patent achieve this purpose. Making trenches in the substrate (but not in

Pictiva EX2054
Samsung v Pictiva
IPR2024-01094

the first or second electrically conductive layers) would serve no purpose discernable from the patent (but such a trench in the substrate could destroy the structural integrity of the claimed invention by breaking it apart).

184. For example, Figure 4 (above) and Figure 9 (below) show the second trench (40) and third trench (42) as akin to the first trench (24), and all three are shown as trenches in the first electrically conductive layer (12) and second electrically conductive layer (14); none of the three trenches are shown in the substrate (10).

Fig. 9

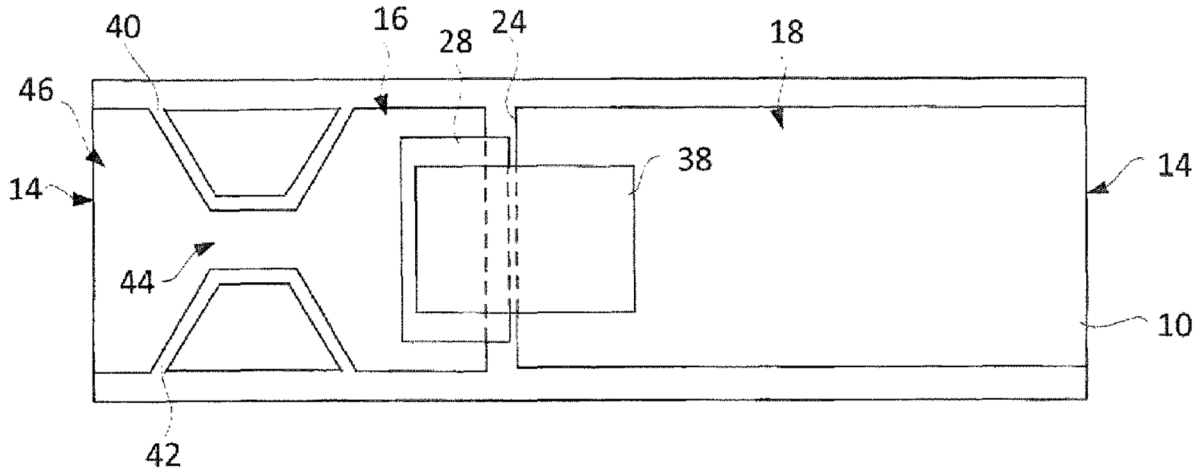

185. Second, according to language in claim 3, the second and third trench "delimit a resistance region, ***which comprises a part of the first and second electrically conductive layers***." '492 patent at cl. 3 (emphasis added). For the second and third trenches to delimit a region in the first and second electrically conductive layers, those trenches must be in those electrically conductive layers. The only form of "delimiting" disclosed in the patent or the prosecution history is the separation of two portions of the first and second electrically conductive layers with a trench. *See* Figure 4 and preceding language from the specification, above. Thus, for the first and second

Pictiva EX2054
Samsung v Pictiva
IPR2024-01094

trenches to delimit a resistance region in the first and second electrically conductive layers, those two trenches must be formed in the first and second electrically conductive layers.

186. In my opinion as a POSITA, a POSITA who reads claim 3 of the ’492 patent in the context of the patent as a whole and the prosecution history would understand the “second trench” and “third trench” to be made in either the first electrically conductive layer, the second electrically conductive layer, or both, because the claim language implies that understanding and there is no other disclosed material in which it would be feasible or practically possible to form those trenches.

G. **“applying an electrically conductive electrode layer in a structured fashion to the dielectric above the first contact region and to the second contact region”; “an electrically conductive electrode layer, which is applied in a structured fashion to the dielectric above the first contact region and to the second contact region”; “an electrically conductive electrode layer, which is applied in a structured fashion on the dielectric above the first contact region and at least partly on the second contact region”**

Term	Pictiva’s Construction	Samsung’s Construction
“applying an electrically conductive electrode layer in a structured fashion to the dielectric above the first contact region and to the second contact region” (cl. 1)	plain and ordinary meaning to a person of ordinary skill in the art in light of the specification, with “applying … in a structured fashion” as construed above; no other parts require construction	“applying an electrically conductive electrode layer in a structured fashion to the dielectric above, ***and insulated from,*** the first contact region, and to the second contact region.” (emphasis added)
“an electrically conductive electrode layer, which is applied in a structured fashion to the dielectric above the first contact region and to the second contact region” (cl. 10)	plain and ordinary meaning to a person of ordinary skill in the art in light of the specification, with “applied … in a structured fashion” as construed above; no other parts require construction	“an electrically conductive electrode layer, which is applied in a structured fashion to the dielectric above***, and insulated from***, the first contact region, and to the second contact region” (emphasis added)
“an electrically conductive electrode layer, which is applied in a structured fashion on the dielectric above the	plain and ordinary meaning to a person of ordinary skill in the art in light of the specification, with “applied … in a structured fashion” as	“an electrically conductive electrode layer, which is applied in a structured fashion on the dielectric above***, and insulated from,*** the first

Pictiva EX2054
Samsung v Pictiva
IPR2024-01094

first contact region and at least partly on the second contact region" (cl. 16)	construed above; no other parts require construction	contact region, and at least partly on the second contact region" (emphasis added)

187. The above claim elements, in claims 1, 10, and 16, all require that an "electrically conductive electrode layer" be applied "in a structured fashion" on or to "the dielectric above the first contact region." In my opinion, in isolation, this claim language is unclear and ambiguous to a POSITA because it does not indicate where the electrically conductive electrode layer is to be applied with respect to the other claimed structures. While the claim language states that the application of the electrically conductive electrode layer is to be "in a structured fashion," "in a structured fashion" means (in part) that "[t]he area to be coated is thus coated only in partial regions dependent on the desired structure." '492 patent at 2:3-4. Thus, the claim language at issue leaves unclear ***which*** "partial regions" are to be coated, and ***what*** the desired structure is. In other words, the claim language at issue requires that the electrically conductive layer be applied in a particular place, to create a particular structure, but the claim language does not specify where that place is or what that structure is.

188. However, in my opinion, reading this claim language in the context of the patent as a whole makes clear that this claim language requires that the electrically conductive electrode layer be applied to the dielectric material such that the electrically conductive electrode material is not in electrical contact with the underlying first contact region—that is, the claim language requires that the electrically conductive electrode layer be ***insulated from*** the first contact region.

189. Figure 7 is generally illustrative:

Pictiva EX2054
Samsung v Pictiva
IPR2024-01094

Fig. 7

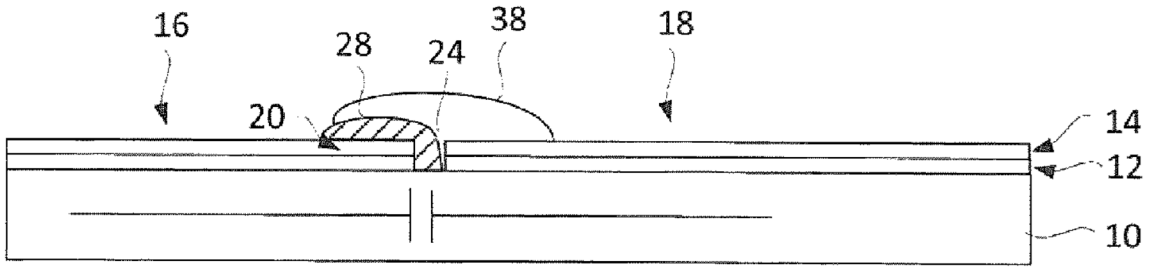

190. In this figure, 16 is the "first contact region"; 18 is the "second contact region"; 28 is the dielectric, and "an electrode layer 38 is applied in a structured fashion on the dielectric 28 and a part of the second contact region 18." '492 patent at 12:29-31. The specification further explains: "The first contact region 16 between the substrate 10 and the electrode layer 38 serves as a first electrode, for example as an anode, of the passive electronic component. The electrode layer 38 on a side of the dielectric 28 facing away from the substrate 10 serves as a second electrode, for example as a cathode, of the passive electronic component." *Id.* at 12:31-36. Thus, in this figure, the first contact region 16 and electrode layer 38 are different electrical contact points for an electronic component, and they are separated by a dielectric (i.e., insulating) material, 28. While I do not understand the claims to be limited to the structure depicted in Figure 7, this figure helps explain the structures referenced in the claim language.

191. The claims at issue all expressly require that the "dielectric electrically insulates the first contact region from the second contact region." '492 patent at cls. 1, 10, 16. Such insulation is only possible if the electrode layer is insulated from the first contact region (as in Samsung's proposed constructions) because, if the electrode layer is in electrical contact with the first contract region, then the first contact region and second contact region will be in electrical contact with one another via the electrode layer (and the dielectric would not "insulate" "the first contact region from the second contact region").

Pictiva EX2054
Samsung v Pictiva
IPR2024-01094

192. More specifically, the claim language at issue requires the electrically conductive electrode layer be applied (in a structured fashion) (1) on or to the dielectric, above the first contact region, and (2) to the second contact region. Because the electrode layer is "electrically conductive" (under the claim language), it will electrically connect the materials that the electrode layer touches. Thus, in understanding how the application of the electrode layer "in a structured fashion" is to be performed under the claim language, a POSITA would seek to resolve one fundamental question: which of the claimed structures does the electrode touch, and which of the claim structures does it not touch? The claim language is explicit that the electrode layer touches the dielectric (i.e., the insulator) and it touches the second contact region. The only remaining question, then, is: does the electrode layer touch the other structure present, that is, the first contact region? The claim language that the "dielectric electrically insulates the first contact region from the second contact region" resolves that question: the electrode layer cannot touch the first contact region, because if it did, the dielectric would not insulate the first contact region from the second contact region; the electrode layer would electrically connect those two regions. In my opinion, a POSITA would understand the claim language to require that the electrically conductive electrode layer be insulated from the first contact region because if it were not, then the claim language requiring the dielectric to insulate the first contact region from the second contact region would not be satisfied. Further, an interpretation of the claim term that allows the electrically conductive electrode layer to be in electrical contact with the first contract region would render meaningless, from a technical perspective, the claim requirement that the "dielectrically insulates the first contact region from the second contact region" because the dielectric cannot insulate those two regions if another material electrically connects them. I understand that claim language should generally not be interpreted to be superfluous or meaningless.

Pictiva EX2054
Samsung v Pictiva
IPR2024-01094

193. The dielectric claimed in claims 1, 10, and 16 fundamentally serves to insulate the first contact region and the second contact region (as required explicitly by the claim language), and to do so, the electrode layer must be insulated from the first contact region, as described above. Therefore, application of the electrode layer "in a structured fashion," as required by the relevant claim language, means that the electrode layer will be applied such that it remains insulated from the first contact region.

194. Disclosures throughout the patent confirm that the first contact region is to remain insulated from the second contact region (and thus, the electrode layer must be insulated from the first contact region), and the patent nowhere indicates or suggests that the electrode layer can be in contact with the first contact region. *See, e.g.*, '492 patent at 1:58-65 ("A dielectric is applied in a structured fashion to the second electrically conductive layer in the first contact region and the substrate in the trench such that the dielectric electrically insulates the first contact region from the second contact region. An electrically conductive electrode layer is applied in a structured fashion to the dielectric above the first contact region and to the second contact region."); *id.* 6:60-7:1 ("A dielectric is applied in a structured fashion on the second electrically conductive layer in the first contact region and at least partly on the substrate in the first trench such that said dielectric electrically insulates the first contact region from the second contact region. An electrically conductive electrode layer is applied in a structured fashion on the dielectric above the first contact region and on the second contact region."); *id.* 3:38-47 ("In various embodiments, a first electrode of a capacitor is formed by the first contact region between the dielectric and the substrate and a second electrode of the capacitor is formed by the electrode layer on a side of the dielectric facing away from the first contact region. When an electrical voltage is applied to the first and second contact regions, the capacitor is charged, in particular the electrodes are charged, and an electric

Pictiva EX2054
Samsung v Pictiva
IPR2024-01094

field forms between the electrodes. The electrical energy in the electric field existing between the charged electrodes is stored in the charged capacitor."); *id.* 11:47-56 ("FIG. 5 shows the substrate 10 and the first and second electrically conductive layers 12, 14, wherein one embodiment of a dielectric 28 is applied in a structured fashion to the second electrically conductive layer 14 in a manner adjoining the trench 24. The dielectric 28 can be an electrically insulating substance, for example, which can subsequently prevent a direct current flow between the first or second electrically conductive layer 12, 14 in the first contact region 16 and the first or second electrically conductive layer 12, 14 in the second contact region 18.").

X. <u>'425 Patent Terms</u>

A. <u>"the organic layer sequence comprises at least one radiation-emitting region configured to generate electromagnetic radiation in a spectral range from infrared radiation to UV radiation during operation"</u>

Claim	Pictiva's Construction	Samsung's Construction
1	plain and ordinary meaning to a person of ordinary skill in the art in light of the specification, where "a spectral range from infrared radiation to UV radiation" refers to spectral range from a wavelength in the infrared radiation range (e.g., between about 730 n.m. to about 300 micrometer) to a wavelength in the UV radiation (e.g., between about 400 nm to about 40 nm). No other terms require construction.	"the organic layer sequence comprises at least one radiation-emitting region configured to generate electromagnetic radiation in a spectral range that includes the full spectrum from infrared radiation to UV radiation during operation"

195. In my opinion, the term "the organic layer sequence comprises at least one radiation-emitting region configured to generate electromagnetic radiation in a spectral range from infrared radiation to UV radiation during operation," as used in the '425 patent and as understood by a POSITA at the time of the alleged invention, refers to "the organic layer sequence comprises

Pictiva EX2054
Samsung v Pictiva
IPR2024-01094

at least one radiation-emitting region configured to generate electromagnetic radiation in a spectral range that includes the full spectrum from infrared radiation to UV radiation during operation."

196. A POSITA at the time of the alleged invention would understand that "the organic layer sequence comprises at least one radiation-emitting region configured to generate electromagnetic radiation in a spectral range from infrared radiation to UV radiation during operation" is "the organic layer sequence comprises at least one radiation-emitting region configured to generate electromagnetic radiation in a spectral range that includes the full spectrum from infrared radiation to UV radiation during operation." The organic layer sequence must generate electromagnetic radiation in the spectral range from infrared radiation to UV radiation during operation. This claim term states that the radiation-emitting region is configured to generate electromagnetic radiation in the spectral range during operation. A POSITA would understand that configuring the radiation region to generate electromagnetic radiation in the spectral range from infrared radiation to UV radiation during operation means that the radiation is this full range during operation. By stating "during operation," a POSITA would understand that the spectral range emitted during operation is the full spectral range—not a subrange.

197. My opinion that "the organic layer sequence comprises at least one radiation-emitting region configured to generate electromagnetic radiation in a spectral range from infrared radiation to UV radiation during operation" is "the organic layer sequence comprises at least one radiation-emitting region configured to generate electromagnetic radiation in a spectral range that includes the full spectrum from infrared radiation to UV radiation during operation" is confirmed by the '425 patent specification. For example, the '425 patent is directed to light devices for broad use that would need broad spectrum spectral ranges that include the entire range from infrared radiation to UV radiation during operation. For example, the '425 patent is directed to "luminaires

Pictiva EX2054
Samsung v Pictiva
IPR2024-01094

[that] can be, for example, luminaires which are used as an alarm clock, which form part of a shower cubicle, which form part of a shower head, which serve as solar protection, which serve as rain protection, which are provided for general lighting which can be used in mobile fashion and/or which inherently combine a plurality of these functions." '425 patent at 1:43-49. Given the broad applications for the '425 patent luminaires and they "inherently combine a plurality" of the broad functions, a POSITA would understand that the full spectrum from infrared radiation to UV radiation would be emitted during operation.

198. Additionally, the '425 patent states that "[d]uring the operation of the organic light-emitting diode 1, electromagnetic radiation is generated in the radiation-emitting region. Therefore, the emission 108 of electromagnetic radiation occurs in the radiation-emitting region. ***Preferably, electromagnetic radiation in the spectral range of infrared radiation to UV radiation is generated in this case***." '425 patent at 24:46-54. A POSITA would understand from the '425 patent's description of the spectral range that it is the full spectrum from infrared radiation to UV radiation emitted during operation. I further note that the emission spectrum is specified to reach from the IR (infrared) to the UV, yet does not require to include IR and / or UV radiation. This means that the emission spectrum must include, at a minimum, the entire visible spectral range.

199. I disagree with Pictiva's proposed construction. A POSITA would not understand "a spectral range from infrared radiation to UV radiation" to refer to spectral range from a wavelength in the infrared radiation range (e.g., between about 730 n.m. to about 300 micrometer) to a wavelength in the UV radiation range (e.g., between about 400 nm to about 40 nm). Pictiva's proposed construction would render this limitation meaningless as it merely states that the spectral range could be any wavelength or wavelengths within the range from infrared radiation to UV radiation. A POSITA would not understand "a spectral range from infrared radiation to UV

Pictiva EX2054
Samsung v Pictiva
IPR2024-01094

radiation" to refer to spectral range from a wavelength in the infrared radiation range (e.g., between about 730 n.m. to about 300 micrometer) to a wavelength in the UV radiation (e.g., between about 400 nm to about 40 nm) as it is not consistent with the '425 patent's specification or the plain language of the claims.

200. Thus, it is my opinion that a POSITA at the time of the alleged invention would understand the term "the organic layer sequence comprises at least one radiation-emitting region configured to generate electromagnetic radiation in a spectral range from infrared radiation to UV radiation during operation," as used in the '425 patent means "the organic layer sequence comprises at least one radiation-emitting region configured to generate electromagnetic radiation in a spectral range that includes the full spectrum from infrared radiation to UV radiation during operation."

B. "encapsulation"

Claims	Pictiva's Construction	Samsung's Construction
1, 3-4, 18	plain and ordinary meaning to a person of ordinary skill in the art in light of the specification, that is, a material for surrounding or sealing something else	"a seal of the organic layer sequence against environmental influences"

201. In my opinion, "encapsulation" should be construed as "a seal of the organic layer sequence against environmental influences."

202. A POSITA at the time of the alleged invention would understand that "encapsulation" means "a seal of the organic layer sequence against environmental influences." The organic layer sequence in the claims must be protected from environmental influences. A POSITA would understand that "encapsulation" is the sealing of the organic layer sequence against environmental influences.

Pictiva EX2054
Samsung v Pictiva
IPR2024-01094

203. My opinion that "encapsulation" means "a seal of the organic layer sequence against environmental influences" is confirmed by the '425 patent specification. The '425 patent specification states "[t]he encapsulation forms a seal of the organic layer sequence against environmental influences." '425 patent at 1:28-38. A POSITA would understand from this disclosure in the '425 patent that "encapsulation" means "a seal of the organic layer sequence against environmental influences."

204. I disagree with Pictiva's proposed construction that "encapsulation" means "a material for surrounding or sealing something else." Pictiva's proposed construction is not how a POSITA understands encapsulation. Pictiva's proposed construction would cover any material that surrounds another material or layer and would render the limitation meaningless. Additionally, Pictiva's construction is not supported by the '425 patent.

***

I declare under penalty of perjury under the laws of the United States of America that the foregoing is true and correct to the best of my knowledge and belief.

Executed this 12th day of November, 2024, at Troy, New York.

E. Fred Schubert

Pictiva EX2054
Samsung v Pictiva
IPR2024-01094

Curriculum Vitae: E. Fred Schubert

Contact information

Department of Electrical, Computer, and Systems Engineering
Rensselaer Polytechnic Institute
110 Eighth Street, Troy, NY 12180
Telephone 518-276-8775 (office); Cell phone 518-253-3762
Email: EFSchubert@rpi.edu Homepage: http://www.rpi.edu/~schubert

Citizenship

Born in Stuttgart, Germany (1956)
Naturalized United States Citizen (1995)

Education

University of Stuttgart	Electrical Engineering	Vordiplom	(U. S. equivalent BSEE)	1978
University of Stuttgart	Electrical Engineering	Diplom Ingenieur (Honors)	(U. S. equivalent MSEE)	1981
Oregon State University	Electrical Engineering	Exchange Student		1977–1978
University of Stuttgart	Electrical Engineering	Doktor Ingenieur (Honors)	(U. S. equivalent Ph.D.)	1986

Current appointment

2002 – present: Professor, Department of Electrical, Computer, and Systems Engineering; Rensselaer Polytechnic Institute, Troy NY

Previous appointments

2002 – 2015: Head and Founder of the Future Chips Constellation; Rensselaer Polytechnic Institute

2002 – 2015: Wellfleet Senior Constellation Professor, Future Chips (Chaired Professor); Rensselaer Polytechnic Institute

2002 – 2012: Professor Department of Physics, Applied Physics, and Astronomy; Rensselaer Polytechnic Institute

2008 – 2009: Director, Founding Director, and Principal Investigator, NSF Engineering Center for Smart Lighting, Rensselaer Polytechnic Institute

2002 – 2003: Adjunct Professor, Boston University

1995 – 2002: Professor, Boston University, Department of Electrical and Computer Engineering; Director of the Semiconductor Devices Research Laboratory; Affiliated Faculty of the Photonics Center.

1988 – 1995: Member of Technical Staff; Principal Investigator; and Member of Management at AT&T Bell Laboratories in Murray Hill, New Jersey

1985 – 1987: Post-Doctoral Member of Technical Staff at AT&T Bell Laboratories in Holmdel, New Jersey.

1981 – 1985: Scientific Member of Staff in the Department of Solid-State Chemistry at the Max Planck Institute for Solid-State Research in Stuttgart, Germany. Ph.D. Dissertation title: "Modern Schottky gate field-effect transistors based on III–V semiconductors"

Fields of Technical Expertise, Hands-on Experience, and Teaching

- Expertise, hands-on experience, and teaching in semiconductor opto-electronics including the following devices: LED, semiconductor laser, vertical cavity surface-emitting laser (VCSEL), solar cell, photo-detector, LED displays, micro-LED displays, and LCD displays. The activities include the design, fabrication, processing, and packaging of the devices, and the use of the devices in circuits and systems. (1981 to present)
- Expertise, hands-on experience, and teaching in semiconductor electronics including the following devices: MESFET, HFET, MOSFET, CMOS-FET, LDD MOSFET, LD MOS FET, FinFET, GAA FET, Vertical MOSFET (high-power MOSFET), thyristor, GTO thyristor, and IGBT. The activities include the design, fabrication, processing, and packaging of the devices, and the use of the devices in discrete and integrated circuits. (1979 to present)
- Expertise, hands-on experience, and teaching in thin-film deposition of metal, semiconductor, and insulator films by PVD (physical vapor deposition) and CVD (chemical vapor deposition) including PECVD (plasma enhanced CVD), MOCVD (metal-organic CVD), ALE (atomic layer epitaxy), ALD (atomic layer deposition), and bulk crystal growth (AlN, GaN, and sapphire). Epitaxial growth of silicon, III-V arsenide, phosphide and nitride epitaxial layers on GaAs, sapphire, Si, and GaN substrates by epitaxy including molecular beam epitaxy (MBE),

Pictiva EX2054
Samsung v Pictiva
IPR2024-01094

metal-organic chemical vapor deposition (MOCVD), and vapor-phase epitaxy (VPE). High-k materials, low-k-materials, phosphors, resins, polymers, encapsulants, alloy semiconductors and their deposition technologies such as epitaxy, CVD, and PVD. Doping of semiconductors by various means including delta doping and atomic monolayer doping. (1981 to present)

- Expertise, hands-on experience, and teaching in the design, operation, and usage of semiconductor devices in lighting systems, communication systems, and power-supply systems and in the analysis and development of LED power supplies using Boost and Buck Converters. (1993 to present)

Technical Research Activities

- Design, development and fabrication of a Si pressure sensor based on the piezo-resistivity of Si using a bridge configuration of four thin-film Si resistors (1979 – 1980)
- Design of a electro-optic Mach-Zehnder Interference Modulator based on Lithium niobate ($LiNbO_3$) operating at a wavelength of 1300 nm (1980 – 1981)
- First study of hot electron effects in selectively doped $Al_xGa_{1-x}As$/GaAs heterostructures (1983)
- Demonstration and elimination of parallel conduction in $Al_xGa_{1-x}As$/GaAs heterostructures (1984)
- First analysis of semiconductors doped with simultaneously shallow and deep donors (1984).
- Development and use of thyristor circuits (including GTO thyristor circuits) for the control of a lamp heating system (1984 – 1985)
- Proposal and demonstration of the δ-doped field-effect transistor. Short-channel effects in sub-micron field-effect transistors can be reduced to their theoretical minimum by using δ-doped structures (1985)
- Development of the theory of alloy broadening in luminescence spectra of alloy semiconductors such as $Al_xGa_{1-x}As$. The current understanding of the low-temperature spectral linewidths of ternary and quaternary alloy semiconductors is based on this theoretical model. The publication analyzing the phenomenon of alloy broadening has been referenced far in excess of 100 times (1984)
- First demonstration of a light-emitting diode with a doping superlattice active region (1985)
- Application of δ-doping to selectively doped heterostructures; Demonstration of high-electron-mobility transistors (HEMTs) with highest free electron concentrations; Analysis of structures by SEM, TEM, and SIMS (1986).
- Demonstration of delta-doped non-alloyed ohmic contacts with very low contact resistance and subsequent demonstration of self-aligned field-effect transistor with delta-doped non-alloyed ohmic contacts (1986)
- Demonstration of the spatial localization of dopants within 20 Å for a number of doping elements in delta-doped semiconductors including GaAs and Si for MESFET and lightly-doped drain (LDD) MOSFET applications and the analysis of delta-doped structures by SIMS (secondary ion mass spectrometry) (with colleague Henry S. Luftman, 1983-1995)
- Significant improvement of the optical properties of doping superlattices by employment of delta doping. Improvement is demonstrated by the first observation of quantized interband transitions in the absorption (1988) and in the emission spectra (1989)
- First demonstration of tunable doping superlattice laser (1989)
- First quantitative analysis of the capacitance-voltage (CV) profiling technique in semiconductors with quantum-confined carriers. Demonstration that resolution of CV profiles in quantum-confined semiconductors is not limited to the Debye screening length (1990)
- Invention and demonstration a new concept by which heterojunction band discontinuities occurring between two different semiconductors are eliminated. The *elimination of heterojunction barriers* is based on parabolic compositional grading of doped heterojunctions. This concept is widely used in the fabrication of vertical cavity surface emitting lasers and other heterojunction devices (1991)
- Invention and first demonstration of resonant cavity light-emitting diode (RCLED) which uses photon quantization in microcavities to enhance the spontaneous emission properties (1992)
- Demonstration of giant enhancement of luminescence intensity in Er-doped Si-SiO_2 microcavities (1992)
- First demonstration of a resonant-cavity detector which is useful for wavelength-selective detection (1993)
- Demonstration of resonant-cavity light-emitting diode (RCLED) with very high brightness. The experimental brightness of the RCLED is five times higher than that of conventional LEDs. Based on calculations, the brightness of RCLEDs is expected to exceed that of conventional LEDs by more than a factor of ten (1994)
- Demonstration of delta doping in silicon for the fabrication of shallow junctions in scaled-down Si lightly-doped drain (LDD) MOSFETs for integrated circuits (Si ICs) (with colleague Dr. H. J. Gossmann, 1990 – 1995)
- Invention of a new concept, *superlattice doping*, for enhanced p-type doping of GaN. All acceptors in GaN are deep, resulting in a low electrical acceptor activation of only 5 %. The new concept of superlattice doping is expected to increase the electrical activation of acceptors by more than a factor of ten (with post-doctoral associate Dr. W. Grieshaber, 1995)

Pictiva EX2054
Samsung v Pictiva
IPR2024-01094

- Investigation of yellow luminescence in GaN and the use of microcavity effects in Ag / GaN / sapphire structures to determine the refractive index of GaN (with post-doctoral associate Dr. W. Grieshaber, 1996)
- Demonstration of the first GaN / GaInN double heterostructure laser. The laser has cleaved facets and was optically pumped. Laser action was demonstrated by (*i*) a threshold in the light-versus-current characteristic, (*ii*) spectral narrowing below *kT* above threshold, (*iii*) a TE / TM polarization ratio greater than one hundred above threshold, and (*iv*) increased slope efficiency with increasing back-side facet reflectivity (with graduate student D. A. Stocker, 1997)
- Co-inventor of photonic-crystal light-emitting diode, PC-LED, jointly with group of Prof. John D. Joannopoulos at MIT (publication by Shanhui Fan *et al*. appeared in *Physical Review Letters* in 1997; US patent 5,955,749 was issued in 1999)
- First demonstration of crystallographic etching of GaN (with graduate student D. A. Stocker, 1998). The discovery, crystallographic etching, can be implemented by wet chemical etching, including photo-enhanced electrochemical (PEC) wet etching. The discovery is widely used in the LED industry to strongly enhance light extraction from LED chips and is found in LED light bulbs.
- Experimental demonstration of a ten-fold enhancement of p-type doping activation in $Al_xGa_{1-x}N$/GaN doped superlattices as compared to bulk GaN and $Al_xGa_{1-x}N$ (with graduate students D. A. Stocker and I. D. Goepfert, 1999)
- Invention and demonstration of the photon-recycling semiconductor light-emitting diode (PRS-LED) which emits *white* light and many other colors with very high luminous performance of > 300 lm/W (with graduate students X. Guo and J. W. Graff, 1999). Invention of the monolithically integrated GaInN/GaN PRS-LED (with graduate students X. Guo and J. W. Graff, 2000)
- Invention and demonstration of polarization-enhanced ohmic contacts in p-type and n-type GaN (with graduate students Y.-L. Li and J. W. Graff 2000)
- Invention and demonstration of AlGaInP light-emitting diode with omni-directional reflector (ODR) for high light extraction efficiency (with post-doctoral associate Th. Gessmann and graduate student J. W. Graff, 2001)
- Developed novel model for high diodes ideality factors (n >> 2.0) in UV LEDs based on multiple rectifying elements (with graduate student J. M. Shah and Prof. Th. Gessmann, 2003)
- Developed new class of materials, low-refractive index materials, or low-*n* materials, with an unprecedented low refractive index of n < 1.10; use of these materials as low-*k* materials for inter-metal-layer dielectrics in Si lightly-doped drain (LDD) MOSFETs in conjunction with ALD-deposited high-*k* gate dielectric MOSFETs for integrated circuits (Si ICs) (with Dr. Jong Kyu Kim, "JQ" Xi, Professors Joel Plawsky, Bill Gill, starting in 2003)
- Developed theory for temperature coefficient of forward voltage in light-emitting diodes, particularly UV light-emitting diodes (with graduate student Yangang "Andrew" Xi, Dr. Jong Kyu Kim, and collaborators at Sandia National Laboratories, 2004, 2005)
- Invented highly efficient "remote phosphor configurations" in white light-emitting diodes (with Jong Kyu Kim, Hong Luo, and collaborators at SAIT-Samsung) (2004, 2005)
- Discovered whispering gallery modes in white LEDs with remote phosphors (with graduate student Hong Luo, Jong Kyu Kim, Yangang "Andrew" Xi, and collaborators at SAIT-Samsung, 2005)
- Developed graded-index antireflection coatings that, unlike conventional anti-reflection coatings, have broadband omni-directional characteristics; the graded-index antireflection coatings use novel low-*n* materials (with Jingqun "JQ" Xi, Jong Kyu Kim, 2007)
- Developed efficiency-droop reducing GaInN / GaInN and GaInN / AlGaInN LED active regions grown by MOCVD and ALE that were demonstrated to reduce the efficiency droop by as much as 40% (with Jong Kyu Kim, Martin F. Schubert, Di Zhu, Jiuru Xu, Mary Crawford, and Dan Koleske, starting in 2007)
- Developed analytic model for efficiency droop based on drift-induced reduction of the carrier-injection efficiency (with Guan Bo Lin, Jaehee Cho, and others, 2012)

Honors and awards

- Google Scholar profile, including the Hirsch-index (h-index) can be found at < http://scholar.google.com > under profile "E. Fred Schubert"
- Elected to *Senior Member* of the *IEEE* "in recognition of professional standing" (1993)
- Recipient of the Literature Prize of the *Verein Deutscher Elektrotechniker* (*VDE*) for "Doping in III–V semiconductors" (Cambridge University Press, Cambridge, 1993). Citation: "The book concerns all aspects of doping in III–V semiconductors. Fundamental, practical, and technological issues of doping are addressed. The book covers the basic theory of shallow donors, shallow acceptors, deep levels, and their influence on the free carrier concentration. It also discusses doping during growth, epitaxy, diffusion, and ion implantation. In the field of semiconductor devices, the book emphasizes applications requiring highly controlled doping distributions. It is an excellent monograph equally suited for study, research, and industry" (1994)

Pictiva EX2054
Samsung v Pictiva
IPR2024-01094

- Elected as a member of the *Bohemian Physical Society* (Cornell University, Ithaca, NY). Citation: "For seminal contributions to the control of spontaneous emission by use of wavelength-size optical cavities, specifically the first demonstration in a glass host using rare earth implanted Si/SiO_2 resonant microcavities" (1994)
- Listed in "Who's Who In Science And Engineering" and "Who's Who in America" published by *Marquis Who's Who*, publishers of the original *Who's Who in America*. (*Marquis Who's Who*, New Providence, NJ) ISBN 0-8379-5755-9 (1996 – present)
- Elected Fellow *of the SPIE* "For pioneering research in semiconductor doping and sustained contributions to the development of high-efficiency light-emitting diodes and lasers". According to the Society's bylaws, a Fellow "shall be distinguished through his achievements and shall have made outstanding contributions in the field of optics, or optoelectronics, or in a related scientific, technical, or engineering field" (1999)
- Recipient of the *Alexander von Humboldt Senior Research Award* of the Alexander von Humboldt Foundation, a Bonn-based non-profit organization promoting the exchange of scientific knowledge between German and highly qualified foreign scholars. According to the Alexander von Humboldt Foundation, academic qualification is the only selection criterion for the award. The award resulted in two extended visits with the Microoptics Laboratory of Professor Jürgen Jahns at the University of Hagen, Germany (1999)
- Elected to *Fellow of the IEEE* "for contributions to semiconductor doping and resonant-cavity devices". According to the IEEE definition "the grade of Fellow is one of unusual professional distinction conferred by the Board of Directors only upon a person of extraordinary qualifications and experience" (1999)
- Listed in the "Dictionary of International Biography, 29th Edition" published by the *International Biography Center*, Cambridge, United Kingdom (2000)
- Recipient of the 2000 *Discover Magazine Award for Technological Innovation* presented by the *Christopher Columbus Foundation* in the category "Energy". The prize was awarded "for the invention and demonstration of the photon recycling semiconductor light-emitting diode", an all-semiconductor LED capable of emitting white light with very high efficiency, see < www.discover.com/awards > (2000)
- Recipient of the *RD100 Award* of the R&D Magazine that honors the "100 most technologically significant products of the year" (with Klaus Streubel of Osram-Sylvania Corp. and Rickard Marcks von Wurtemberg of Mitel Corp.). The prize was awarded for the "*Resonant-cavity light-emitting diode*" that uses enhanced spontaneous emission occurring in resonant cavities. The device is used in plastic optical fiber communication links, in telescopes for rifles, and many other applications (2000).
- Elected to *Fellow of the OSA* "for the invention and demonstration of the resonant-cavity LED and the photon-recycling semiconductor LED". OSA Fellows are elected by the OSA Board of Directors (2001)
- Recipient of the Boston University Provost Innovation Fund Award (Provost Dennis D. Berkey) valued at $ 25,000 for research and development of promising technologies (2001)
- Elected to *Fellow of the APS* "for pioneering contributions to the doping of semiconductors including delta doping, doping of compositionally graded structures resulting in the elimination of band discontinuities, and superlattice doping to enhance acceptor activation" (2001)
- Honored with RPI Medal as Senior Constellation Chair during Investiture Ceremony (2002)
- Received "2002 Rensselaer Polytechnic Institute Trustee Faculty Achievement Award" (2002)
- Inducted as Wellfleet Senior Constellation Professor, Future Chips, Rensselaer Polytechnic Institute, November 21 (November 2003)
- Distinguished Lecturer of the IEEE Electron Devices Society (2003–2006)
- Elected member in Eta Kappa Nu (2004)
- "Best Oral Presentation Award" was won by Ph. D. student Hong Luo (who was the presenter), J. K. Kim, Y. A. Xi, J. M. Shah, Th. Gessmann and E. F. Schubert "Improvement of extraction efficiency of GaInN light-emitting diodes by employment diffuse omni-directional reflectors" *Connecticut Microelectronics & Optoelectronics Consortium (CMOC)*, 14th annual symposium, New Haven CT, March 17 (March 2005).
- "Best Student Poster Award" of the *International Semiconductor Device Research Symposium (ISDRS)* was won by Ph. D. student J.Q. Xi (presenter), Jong Kyu Kim, Dexian Ye, Jasbir S. Juneja, T.-M. Lu, Shawn-Yu Lin, and E. Fred Schubert "Optical Thin Films with Very Low Refractive Index and Their Application in Photonic Devices", *International Semiconductor Device Research Symposium (ISDRS)*, Dec. 7 – 9, Bethesda, MD (December 2005)
- "MRS Silver Award" of the Materials Research Society was won by Ph. D. student Yangang Andrew Xi (who was the presenter), K. X. Chen, F. Mont, J. K. Kim, C. Wetzel, E. F. Schubert, W. Liu, X. Li, J. A. Smart "Extremely high quality AlN grown on (0001) sapphire by using metal-organic vapor-phase epitaxy" *Materials Research Society (MRS) Fall Meeting*, Boston MA, November 27 – December 1 (2006) Boston MA (December 2006)
- "25 Most Innovative Micro- and Nano-Products of 2007 Award" in July 2007 issue of *R&D Magazine* and *Micro/Nano Newsletter*. This recognition was given for the "Non-Reflective Coating" product that was published in *Nature Photonics* in 2007; full citation: Xi, J.-Q., Martin F. Schubert, J. K. Kim, E. F. Schubert,

Pictiva EX2054
Samsung v Pictiva
IPR2024-01094

Minfeng Chen, Shawn-Yu Lin, Wayne Liu, and Joe A. Smart "Optical thin-film materials with low refractive index for broadband elimination of Fresnel reflection" *Nature Photonics* **1**, 176, March 2007 (July 2007)

- "Scientific American 50 Award" of 2007, as published in the January 2008 issue of *Scientific American*. According to the *Scientific American Magazine*, this award "celebrates visionaries from the worlds of research, industry and politics whose recent accomplishments point toward a brighter technological future for everyone" (January 2008)
- "Editors' Choice" of *Science Magazine*, *Science*, Volume **319**, page 1163, February 29 (February 2008). This distinction was awarded for the publication: Jong Kyu Kim et al., "Light-extraction enhancement of GaInN light-emitting diodes by graded-refractive-index indium tin oxide anti-reflection contact" that appeared in *Advanced Materials* **20**, 801, 2008 (February / March 2008)
- Received "2008 Rensselaer Polytechnic Institute Trustee Faculty Achievement Award" (2008)
- "Best Oral Presentation Award" won by David J. Poxson (who was the presenter), Frank W. Mont, Jong Kyu Kim, and E. Fred Schubert "Multilayer nano-structured anti-reflection coating with broad-band omni-directional characteristics" *Connecticut Microelectronics and Optoelectronics Conference* (*CMOC*), University of Connecticut, Storrs, Connecticut, April 9 (April 2008)
- "Best Oral Presentation Award" for presentation: David Meyaard, Sameer Chhajed, Jaehee Cho, E. Fred Schubert, Jong Kyu Kim, Daniel D. Koleske, and Mary H. Crawford "Temperature-dependent light-output characteristics of GaInN light-emitting diodes with different dislocation densities" *Connecticut Microelectronics and Optoelectronics Consortium* (CMOC) Symposium, New Haven CT, March 2 (March 2011)
- Identified as top 1% of patentees in the field of optoelectronics by study conducted by Professor Erica Fuchs of Carnegie Mellon University under a study supported by the US National Science Foundation (July 2011)
- Received "2012 Rensselaer Polytechnic Institute Trustee Faculty Achievement Award" (November 2012)
- My "LinkedIn" profile was one of the top 10% most viewed "LinkedIn" profiles during 2012 (January 2013)
- My graduate student, Mr. Ming Ma, received the $ 30,000.00 Lemelson-Rensselaer Student Prize for the invention entitled "Graded-refractive-index (GRIN) structures for brighter and smarter light-emitting diodes"; The Prize is awarded annually by the Lemelson Foundation (March 2013)
- Received the IEEE Life Fellow Award (2022)

Service to the technical community

- Current or former member of the *American Physical Society* (Member of the *Division of Materials Physics*, Member of the *Division of Condensed Matter Physics*), *Institute of Electrical and Electronics Engineers*, *Materials Research Society*, *Optical Society of America*, *Society for Optical Engineering* (*SPIE*), and the *Verein Deutscher Elektrotechniker*
- Co-author of hundreds of research articles, co-inventor of more than 30 United States patents, and numerous foreign patents (1981 – present)
- Gave many invited talks at scientific conferences organized by the *American Physical Society*, *Institute of Electrical and Electronic Engineers*, *Materials Research Society*, *SPIE* (*The International Society for Optical Engineering*), *Electrochemical Society*, *American Vacuum Society*, *Engineering Foundation*, and other professional societies (1985 – present).
- Co-editor (with A. M. Glass) of a Special Issue of the *Journal of Optical and Quantum Electronics* (Vol. **22**, 1990) on "Charge-transport assisted optical non-linearities in semiconductors" (1990)
- Symposium chair of the *American Vacuum Society Greater New York and New Jersey Chapter* on "Epitaxially grown semiconductors with atomic level control" (1991).
- Moderator of MRS Internet discussion on "Doping and Dopants in GaN" (MRS Internet Journal, 1995 – 1997)
- Member of review panels of the National Science Foundation (1995 – present)
- Conference Chair of SPIE Photonics West conference on "Light-emitting diodes: Research, Manufacturing, and Applications" San Jose, CA (1997)
- Technical work has been featured in popular journals, magazines and newspapers including the New Scientist, Discover Magazine, Wall Street Journal, Boston Globe, Focus, and on National Public Radio (1996 – present)
- Conference Chair of SPIE Photonics West conference on "Light-emitting diodes: Research, Manufacturing, and Applications" San Jose, CA (1998)
- Program Committee Member: IEEE IEDM, International Electron Devices Meeting (1999 and 2000)
- Conference Chair of SPIE Photonics West conference on "Light-emitting diodes: Research, Manufacturing, and Applications" San Jose, CA (1999)
- Program Committee Member: ISBLLED, International Symposium on Blue Laser and Light-Emitting Diodes, Berlin, Germany, March 5 – 10 (2000)
- Conference Chair of SPIE Photonics West conference on "Light-emitting diodes: Research, Manufacturing, and Applications" San Jose, CA (2000)

Pictiva EX2054
Samsung v Pictiva
IPR2024-01094

- Conference Chair and Co-Organizer of the TMS- and ONR-sponsored conference on "Doping, Dopants, and Low Field Carrier Dynamics in Wide Gap Semiconductors", Copper Mountain, Colorado, April 2 - 6 (2000)
- Chair, IEEE LEOS, Central New England Chapter. During my tenure as Chair, the Central New England Chapter won the IEEE LEOS Chapter award for the highest membership growth (1999 – 2000)
- Expert Witness involving semiconductor materials, devices, and packaging including elemental and compound semiconductors such as Si, SiGe, SiC, as well as III–V arsenides, phosphides and nitrides (1998 – present)
- Member of the Board of Governors, IEEE Laser and Electro-Optics Society (LEOS) (1999 – 2000)
- Member of the Optoelectronics Industry Development Association (OIDA) Roadmap Panel on Solid-State Lighting, Albuquerque NM Oct. 26 – 28 (2000)
- Conference Chair of SPIE Photonics West conference on "Light-emitting diodes: Research, Manufacturing, and Applications" San Jose, CA (2001)
- Panel Member of National Research Council meeting on "Solid-State Lighting:" held at NAS and NAE, Washington DC, March 26 (2001)
- Program Committee Member of SPIE Photonics West conference on "Laser and LED Applications" chaired by Dr. Kurt Linden, San Jose CA Jan (2002)
- Conference Chair of SPIE Photonics West conference on "Light-emitting diodes: Research, Manufacturing, and Applications" San Jose, CA (2002)
- Program Committee Member: ISBLLED, International Symposium on Blue Laser and Light-Emitting Diodes, Cordoba, Spain, March 11–15 (2002)
- Program Committee Member for subcommittee on "Semiconductor lasers and LEDs" for OSA Conference on Lasers and Electro-Optics and Quantum Electronics and Laser Science Conference (CLEO / QELS) (2002 – 2003) Baltimore MD June 1–6 (2003)
- Reviewer for the National Research Council of report entitled "Partnerships for Solid-State Lighting: Report of a Workshop" authored by the Board on Science, Technology, and Economic Policy. This report is forwarded to the US Congress for the initiation of a national Solid-State Lighting Initiative. (2002)
- Program Committee Member "Lester Eastman conference on high performance devices" University of Delaware, Newark, Delaware, August 6 – 8 (2002)
- Conference Chair of SPIE Photonics West conference on "Light-emitting diodes: Research, Manufacturing, and Applications" San Jose CA (2003)
- OIDA Next Generation Lighting (NGL) Consortium. Member of "Light-Emitting Diode" Committee (2003)
- Program Committee Member, International Semiconductor Device Research Symposium (ISDRS) Washington DC, Dec. 8 – 12 (2003)
- Program Committee Member of "Display and Solid-State Lighting Devices" conference for OSA/IEEE Conference on Lasers and Electro-Optics (CLEO) (2003 – 2004)
- Elected Member of the IEEE Electron Device Society Administration Committee (IEEE AdCom) (2003 – 2008)
- Conference Chair of SPIE Photonics West conference on "Light-emitting diodes: Research, Manufacturing, and Applications" San Jose CA (2004)
- Program Committee Member "Fourth International Conference on Solid-State Lighting" August 2 – 6 Denver, CO (2004)
- Program Committee Member for the "Blue 2004: Advanced LEDs and Lasers Conference" Hsinchu, Taiwan, May 10 – 12 (2004)
- Conference Chair of SPIE Photonics West conference on "Light-emitting diodes: Research, Manufacturing, and Applications" San Jose CA (2005)
- Program Committee Member "International Semiconductor Device Research Symposium" December 7 – 9 Washington, DC (2005)
- Chair of "Display and Solid-State Lighting Devices" conference of OSA/IEEE Conference on Lasers and Electro-Optics (CLEO) (2005)
- Best Oral Presentation Award (Presenter: Hong Luo) at *Connecticut Microelectronics & Optoelectronics Consortium* (CMOC), 14th annual symposium, New Haven CT, March 17 (March 2005)
- Conference Chair of MRS Spring meeting "Symposium DD: Solid-State Lighting Materials and Devices" San Francisco, April 17 – 21 (April 2006)
- Member on the International Advisory Committee of *First International Conference on Display LEDs* (ICDL 2007), Seoul, Korea, January 31 to February 2 (2007)
- Member, Program Committee of *SPIE Photonics West* conference "Light-Emitting Diodes: Research, Manufacturing, and Applications XI" San Jose, CA, January 20 – 25 (2007)
- Program Chair of *SPIE Photonics West* conference "Semiconductor Lasers and LEDs" San Jose, CA, January 20 – 25 (2007)
- Member, Executive Organizing Committee *SPIE Photonics West* conference "LASE 2007" San Jose, CA, January

Pictiva EX2054
Samsung v Pictiva
IPR2024-01094

20 – 25 (2007)

- Opto Track Chair of *SPIE Photonics West* conference "Semiconductor Lasers and LEDs" San Jose, CA, January 21 – 24 (January 2008)
- Member, Program Committee, Light-emitting diodes: Research, Manufacturing, and Applications, SPIE Photonics West 2008, San Jose, California, January 19 – 24 (January 2008)
- Program Committee Member of the 7th International Symposium on Semiconductor Light Emitting Devices (ISSLED-2008) held in Phoenix, Arizona (USA), April 27 – May 2 (April 2008)
- Member, Program Committee, China SSL 2008, Shenzhen Convention & Exhibition Center, China, July 24 – 26 (July 2008)
- Member, Program Committee, International Workshop on Nitride Semiconductors, IWN 2008, Montreux, Switzerland, October 6 – 10 (October 2008)
- Opto Track Chair of *SPIE Photonics West* conference "Semiconductor Lasers and LEDs" San Jose, CA, January 25 – 29 (January 2009)
- Guest Editor of Special Issue on *Solid-State Lighting* published in the *IEEE Journal of Selected Topic in Quantum Electronics*, July / August edition (August 2009)
- Honorable Conference Chair, 6th China International Forum on Solid-State Lighting (China SSL), Shenzhen Convention & Exhibition Center, China, October 14 – 16 (October 2009)
- Program Committee Member, International Conference on Nitride Semiconductors (ICNS), Jeju, South Korea, October 18 – 23 (October 2009)
- Program Committee Member, The Second International Conference on White LEDs and Solid-State Lighting, Taipei, Taiwan, December 13 – 16 (December 2009)
- Editor, *Compound Semiconductors and Energy Applications and Environmental Sustainability*, Materials Research Society (MRS) Symposium Proceedings Volume 1167 (MRS, Warrendale PA, 2009)
- Conference Chair, OPTO, *SPIE Photonics West 2010*, San Francisco, California, January 23 – 27 (January 2010)
- Guest Editor of Special Issue on *Light-Emitting Diodes* published in the *IEEE Transactions on Electron Devices* (January 2010)
- Program Committee Member, *8th International Symposium on Semiconductor Light Emitting Devices* (ISSLED), Beijing, China, May 16 – 21 (May 2010)
- International Advisory Committee Member of the 16th *Microoptics Conference* (MOC'10) held in Hsinchu, Taiwan, sponsored and endorsed by OSA and IEEE/Photonics Society and organized by National Chiao Tung University, Oct. 31 to Nov. 3 (October 2010)
- Member of Academic Committee of *China Solid-State Lighting Conference* (CHINA SSL 2010) Shenzhen, China, October 14 – 16 (October 2010)
- Conference Co-Chair, OPTO, *SPIE Photonics West 2011*, San Francisco, California, January 22 – 27 (January 2011)
- Executive Organizing Committee OPTO, *SPIE Photonics West 2011*, San Francisco, California, January 22 – 27 (January 2011)
- Program Committee Member of conference entitled: "Light-Emitting Diodes: Materials, Devices, and Applications for Solid-State Lighting XV *SPIE Photonics West 2011*, San Francisco, California, January 22 – 27 (January 2011)
- Member of CLEO Subcommittee 15, entitled "LEDs, Photovoltaics and Energy-Efficient ("Green") Photonics" for the 2011 Conference on Lasers and Electro-Optics (CLEO), Baltimore, Maryland May 1 – 6 (May 2011)
- Member of the Academic Committee of the 8th China International Forum on Solid-State Lighting (CHINA-SSL-2011) Guangzhou November 8 – 10 (November 2011)
- Program Committee Member of conference entitled: "Light-Emitting Diodes: Materials, Devices, and Applications for Solid-State Lighting XV *SPIE Photonics West 2012*, San Francisco, California, January 21 – 26 (January 2012)
- Member of CLEO Subcommittee 15, entitled "LEDs, Photovoltaics and Energy-Efficient ("Green") Photonics" for the 2012 Conference on Lasers and Electro-Optics (CLEO), San Jose, California, May 6 – 11 (May 2012)
- Member of Academic Committee of the 9th China International Forum on Solid-State Lighting (CHINA SSL 2012), Guangzhou, China, November 5 – 7, 2012 (November 2012)
- Program Committee Member of conference entitled: "Light-Emitting Diodes: Materials, Devices, and Applications for Solid-State Lighting XVI *SPIE Photonics West 2013*, San Francisco, California, 2 – 7 February 2013 (February 2013)
- Member of CLEO Subcommittee in the topic area: "Science & Innovation 15: LEDS, Photovoltaics and Energy-Efficient ("Green") Photonics" for the CLEO 2013 conference, April 28 – May 3, 2013 in Baltimore, Maryland (May 2013)
- Member, International Advisory Committee of the International Conference on Advanced Electromaterials (ICAE 2013) held on Jeju Island, Korea, from November 12 – 15, 2013 (November 2013)

Pictiva EX2054
Samsung v Pictiva
IPR2024-01094

- Program Committee Member, *Solid-State and Organic Lighting* (*SOLED*), OSA Topical Meeting, 3 – 7 November 2013, Marriott Tucson Star Pass, Tucson, Arizona, USA (November 2013)
- Co-Chair, OPTIC International Conference, Chung Li, Taiwan, National Central University, December 5 – 7, 2013 (December 2013)
- Program Committee Member of conference entitled: "Light-Emitting Diodes: Materials, Devices, and Applications for Solid-State Lighting XVII" *SPIE Photonics West* 2013, San Francisco, California, 1 – 8 February (2014)
- Publication Committee Member, *5th International Conference on White LEDs and Solid-State Lighting* (White LEDs), Jeju Island, Korea, May 25 – 28, 2014 (May 2014)
- Sub-Committee Chair of Track 6: Displays, Solid-State Lighting, Photovoltaics, and Energy-Efficient Photonics of *Asia Communications and Photonics Conference 2014* (ACP 2014). ACP is the largest and the most influential conference in Asia and Pacific Rim for communications and photonics technologies. ACP 2014, Shanghai International Convention Center, Shanghai, China, November 11 – 14 (2014)
- International Consultant of technical seminar of the 11th China International Forum on Solid-State Lighting (SSL-China 2014) Guangzhou, China, November 6 – 8 (2014)
- Member of the International Advisory Committee of the 11th International Symposium on Semiconductor Light Emitting Devices (ISSLED 2017) held in Banff, Canada on October 8 – 13 (2017)
- Assisting the US Judicial Government Branch (various US District Courts), the USPTO (US Patent and Trademark Office) and the ITC (International Trade Commission) by serving as an independent Technical Expert Witness (1997 to present)

Books

- ***Doping in III-V semiconductors*** (author) Hardback and paperback, 628 pages (Cambridge University Press, Cambridge, UK, 1993). The following excerpt is from a book review by D. L. Miller, *University of Pennsylvania*, University Park PA, which appeared in *Physics Today*, Oct. 1994, p. 71: "[...] Fred Schubert has written a book that very nicely fills two roles: It serves as a reference volume for those of us who use III-V materials, and it provides enlightening explanations of interesting and important problems in semiconductor physics. [...] Schubert, who is employed by AT&T Bell Laboratories, brings his extensive research involvement with III-V materials physics straight to this book. His lucid explanations of some of the important physics of doped semiconductors is a major strength. For example, the chapter on deep centers provides the clearest treatment of the DX center I can remember reading, and it uses the large lattice distortion model and configurational coordinates introduced for the DX center to describe the EL2 deep level. This book can also serve as an excellent reference volume, because it briefly describes epitaxial growth techniques and the doping methods used with them, catalogs dopant-related phenomena, describes characterization techniques and provides 45 pages of citations to published articles and books. [...] I will use it to help my graduate students in the physics of semiconductors. [...] It will certainly be available on my bookshelf, in part to remind me what the Burstein-Moss shift is and in part for the literally hundreds of references that it provides on nearly every topic related to III-V semiconductor doping. Because of its clarity in treating some interesting phenomena of modern semiconductor physics, you too might want to get a copy of this book, even if you believe that Ga and As are just poor alternatives for doping silicon"
- ***Delta doping in semiconductors*** (editor) Hardback and paperback, 616 pages (Cambridge University Press, Cambridge, U. K., 1996)
- ***Light-emitting diodes*** (author) Hardback and paperback, 328 pages (Cambridge University Press, Cambridge, UK, 2003). The following excerpt is from a book review by David Bour, *Agilent Laboratories*, Palo Alto CA, which appeared in *Physics Today*, Nov. 2004, p. 66: "[...] In "*Light-emitting diodes*", E. Fred Schubert provides an excellent review of the physics and technology of semiconductor LEDs. […] Interesting anecdotes like [the first demonstration of electroluminescence], clearly written by someone with a broad perspective and expertise, appear throughout the book, making it enjoyable to read. […] Schubert provides an excellent description of the undesirable [non-radiative] recombination pathway. […] Schubert has made pioneering contributions to those devices, and this variety of LEDs may become more widely used in the future. […] Overall, "*Light-emitting diodes*" is an excellent examination of the physics and technology of semiconductor LEDs. The narration is simple and direct, and the book is well referenced for those seeking a deeper understanding of the topic. Written for the graduate level, the text will appeal to a broad audience; and for specialists who make semiconductor LEDs and laser diodes, it will serve as a useful connection to the scientific literature."
- ***Light-emitting diodes, second edition*** (author) Hardback, 422 pages (Cambridge University Press, Cambridge, UK, 2006)
- ***Physical Foundations of Solid-State Devices*** (author) eBook, 275 pages, ISBN-13: 978-0-9863826-2-8 (Google Books, Mountain View CA, 2015)

Pictiva EX2054
Samsung v Pictiva
IPR2024-01094

- ***Light-emitting diodes, 3rd edition*** (author) eBook, 672 pages with hundreds of colored illustrations, ISBN: 978-0-9 863826-6-6 (Google Books, Mountain View CA, 2018) "The 1st edition of the book "Light-Emitting Diodes" was published in 2003. The 2nd edition was published in 2006. The current 3rd edition of the book is a substantial expansion of the second edition and has 37 chapters. The book includes a thorough discussion of white light-emitting diodes (LEDs), phosphor materials used in white LEDs, packaging technology, and the various efficiencies and efficacies encountered in the context of LEDs. The background of light, color science, and human vision is provided as well. The fully colored illustrations of the 3rd edition are undoubtedly beneficial given the prominent role of light and color in the field of LEDs. The book is a comprehensive discussion of the LED, particularly its semiconductor physics, electrical, optical, material science, thermal, mechanical, and chemical foundations. The 3rd edition is published in electronic format in order to make the book affordable and easily accessible to a wide readership."

Courses and laboratories developed at Boston University

- Developed first laboratory for "Physics of semiconductor devices" (SC-471) Fall (1998)
- Developed course "Quantum mechanics applied to semiconductor devices" (SC-574) Fall (1999)
- Developed course "Semiconductor light emitters" (SC-760) Fall (2000)
- Developed distance-learning course and NTU course on "Light-emitting diodes – Device physics and applications" Fall (2000)

Courses taught at Boston University

- Undergraduate Course "Physics of semiconductor devices" (SC-471)
- Graduate course "Fiber optic communication systems" (SC-563)
- Graduate course "Quantum mechanics applied to semiconductor devices" (SC-574)
- Graduate course "Introduction to solid-state physics of devices" (SC-577)
- Graduate course "Quantum electronics" (SC-700)
- Graduate course "Integrated optoelectronics" (SC-770)
- Graduate course "Compound semiconductor devices" (SC-771)
- Graduate course "Light-emitting diodes" (SC-760)
- Graduate course "Research seminar" (SC-860, SC-892)
- Other courses "Research", "Guided Study", "Master Thesis", and "Dissertation" (SC-900)

Courses taught at Rensselaer Polytechnic Institute

- Graduate Course "Semiconductor devices and models II" (ECSE-6290)
- Undergraduate course "Microelectronics technology" (ECSE-2210)
- Undergraduate course "Fields and Waves 1" (ECSE-2100)
- Graduate course "Quantum mechanics applied to semiconductor devices" (ECSE-6968)
- Graduate course "Physical foundations of solid-state devices" (SC-6960)
- Graduate course "Light-emitting diodes and solid-state lighting" (SC-6961)
- Undergraduate course "Introduction to Electronics" (ECSE-2050)
- Other courses "Research", "Guided Study", "Master Thesis", and "Dissertation"

Teaching evaluations and students' comments

1997 – Students made the following comments: "Clear … organized … excellent explanations … I've never had a professor like him – I wish all were like him … very clear and concise presentations … strong response to students' questions and concerns … Professor provided excellent notes … laid out lectures in a clear and precise manner which worked out wonderfully … well organized and confident … responsive to students' concerns … excellent for students going into the semiconductor industry … excellent hand-outs and course materials … well prepared … clear lectures … I was strongly encouraged … materials are very interesting … hand-outs were excellent … material is very important … the presentation of materials was very clear … hand-outs were excellent support to the class … efforts made by Prof. Schubert in keeping everyone at the same pace was remarkable …"

1998 – Students made the following comments: "Professor was always well prepared … excellent content … very relevant for the field of solid-state devices … excellent preparation for the class … handouts were very good … very well-organized teacher … excellent knowledge of material … provided a complete background of all material … easy to talk to … excellent overall teaching skills … really enjoyed coming to class … his choice of topics and homework helped me a lot … enthusiastic in teaching and helpful during the office hours … one of the best professors I have had at BU … course gave a very good overview of the different solid-state physics principles … the course was very well organized … relevant examples and homework were given … good explanations were

Pictiva EX2054
Samsung v Pictiva
IPR2024-01094

given … presented clearly … presentation was clear … communicated effectively … very knowledgeable … good demonstrations in class … gives clear descriptions … asks questions of class … grades homework fairly … good at answering questions … no weak points … excellent instructor and scientist … inspiring professor … thorough … the instructor is very precise and well prepared … his knowledge of the material is exact … very responsive to feedback … encourages student questions, class participation and discussion … the instructor cared about whether students understood material … the instructor used applications immediately after showing theory … handouts were excellent … guest lecture and lab tour excellent idea … excellent class notes … presented topics neatly … well prepared … review of ongoing research topics was great … Professor Schubert is undoubtedly an expert in his area …"

1999 – Students made the following comments: "He enjoyed teaching the material and was very clear … the presentation of the material in class was excellent … he helped me to understand a lot about semiconductors … Prof. Schubert always tried to make sure that we would all have a clear understanding of the material … manuscripts were very helpful … encouraged lots of class participation and was always readily available for help … presentation was excellent … the instructor was always willing to help me … very helpful … Clearly, Prof. Schubert is *more* than just extremely knowledgeable about this material … very thorough and exact communication of points … excellent course packet written by the instructor … he was very well prepared for class … He is extremely fair and encourages participation … he is also very accessible … excellent instructor … very approachable and easy to ask questions of … handouts were very effective and helpful … Prof. Schubert is very prepared and concepts are well explained … materials will be very useful for my future … very open to questions"

2000 – Students made the following comments: "He did a lot of experiments which really helped … the material is very interesting and cutting edge … clear presentations … good in-class demonstrations … very clear lectures … the material really does challenge you … takes the time to answer your questions … very interesting material … relevant to today's world of communication … the field trip was fun … in-class demonstrations really added to class … good understanding of course material … excellent details, willing to help, good explanations … in-depth details on quantum mechanics … the instructor was extremely accessible to students … he encouraged participation in class … he gave intuitive arguments and explained concepts in a very physical way … I very much enjoyed Professor Schubert and would like to take more classes with him … material was very beautiful … I *very much* enjoyed the papers that were discussed … everything is well organized … hand-out material is very complete and clear … lectures are clear … the professor prepared an excellent manuscript … explained things very clearly … he has strong enthusiasm to solve students' questions … it's a very important course … Professor follows the course notes exactly, so one can concentrate on material without having to focus on details … clearly presented material … the course is great preparation for future courses in solid-state physics … I greatly admire Professor Schubert …"

2001 – Students made the following comments: "He has a thorough understanding of the subject … I like the fact that he shows us examples in class demonstrations … the manuscript was good … instructor provides good notes … materials are presented clearly … in this course you learn a lot … very illustrative and in depth … very interesting course … Professor presented the material well … Professor seemed to have a strong grasp on what he was teaching … the basics were presented correctly … smooth transition into more complex materials … presented basics well … Professor's strong points are knowledge, organization and class materials … clear conception … very important and useful class … Professor knew what was going on … manuscript and his notes were very helpful … responded to suggestions … notes were comprehensive … just fine … manuscript was good … knows the material very well … notes handed out are good … expert knowledge of material … developed lectures logically and straightforward … lecture notes were prepared for us - very nice touch … Professor has deep knowledge of the materials … Professor is always prepared for lectures … he emphasizes principles and the concepts … good preparation … good stuff and clear presentation … good research and industry experience … excellent handout notes and materials … excellent teaching skills … inspires the interest of students … great knowledge of material … well organized course notes … Professor Schubert gave very clear instructions … listening to his presentation is a true enjoyment of an excellent art of lecture style … the manuscript has the quality of an excellent book … the manuscript was an excellent reference source book … the instructor was very clear and well organized and encouraged participation … text [written by Schubert] was extremely good … expert knowledge of materials … class demonstrations were very beneficial … can clearly relate complex ideas – very good … has a high amount of patience … excellent understanding of material … very enthusiastic in teaching … always available for discussion … very knowledgeable … I don't see any weak points … he explains the theory very clearly …"

2002 – Students made the following comments: "Always prepared … presented difficult material in a manner that was easy to understand … presented everything neatly … very helpful and organized … presents subjects in a very easy and friendly format … very well qualified … great experience … very detailed notes … well organized … very useful … very good diagrams and explanations … he knows the material extremely well … notes given to us

Pictiva EX2054
Samsung v Pictiva
IPR2024-01094

are extremely helpful … professor was very knowledgeable … was able to answer any of our questions … very informative course … very knowledgeable and a great teacher … the instructor is enthusiastic to teach students … the instructor can explain the theory very clearly …"

2003 – Students made the following comments: "Great overall knowledge … good organization skills … demonstrations were very interesting and useful … effective instructor … handouts were extremely useful and organized … good course for completely understanding many points of fiber optics …"

2004 – SPIE short course: "Encouraged questions and handled them well … excellent short course … I really appreciated and enjoyed this course … good course – covered very broad matters … the instructor was very knowledgeable on the topic … excellent! …"; RPI Semiconductor devices and models II (ECSE 6290): Overall excellence of teacher: 4.8 out of 5.0. Student comments: "course was very well prepared … [course] was very organized … this is an excellent course … I learned a lot from this course … the course was very good … thanks Prof. Schubert for a wonderful course … it's been a great course … thank you …" RPI Microelectronics Technology (ECSE 2210): Overall excellence of teacher: 4.7 (average 4.2). Overall excellence of course: 4.3 (average 3.9). Student comments: "Understandable presentation … great job [of] Prof. Schubert … very nicely done class … very helpful throughout the entire course … provided timely explanations to complicated material … very informative … course was fun and interesting … very interesting lecturer … very down to earth and easy to ask for help … [instructor] did a good job in presenting [material] … good course … fun course … excellent instructor … he is a great guy and very knowledgeable … I would definitely take a class from him again" **Book review** by Neal Oldham (San Jose, CA, USA) on "Doping in III–V semiconductors" (E. F. Schubert, Cambridge University Press, Cambridge UK, 1993) on amazon.com (May 17, 2002): "[This is the] best book I've encountered in the semiconductor field. This is, no question, the best book that I've encountered in the entire field of semiconductor physics. It is expertly organized and indexed, easy to follow, complete in its treatment of electrical and materials-science aspects of III-V semiconductor production and measurement, well-written ... worth every penny if you even have the most remote interest in the subject." **Book review** by Debdeep Jena (Santa Barbara, CA, United States) on "Doping in III–V semiconductors" (E. F. Schubert, Cambridge University Press, Cambridge UK, 1993) on amazon.com (July 6, 2001): "Very useful text for semiconductor crystal growers. Doping is a big, big issue in semiconductors; this text does appreciable justice in its treatment of the issue. In addition, Schubert treats heterostructure physics appreciably well (in fact better than many textbooks on semiconductor physics!). Perusal of this book has proved very rewarding for me, and I expect it will do the same wonder for you too."

2005 – SPIE Photonics West short course student comments: "Very good instructor! … very knowledgeable … clear on complex subjects … good job fielding questions … (numerical score 4.3 out of 5.0). Educational materials on the web: … I have greatly enjoyed your LED slideshow. CLEO short course: … very good and well-organized course!" ECSE 6968: "Class presentations were very helpful in learning … very useful in learning *the details* of fundamental concepts … the course is very good … the course is excellent for engineers … your […] treatment brought about a much better understanding … examples were great and helpful … [discussion of] history and photons […] helped increase interest … After your course now, I can actually approach a quantum mechanics text book without fear … overall, I just wanted to say – *thank you* … excellent course … the instructor made it interesting and taught very effectively … the manuscript provided was also very well written … class was excellently structured … will benefit my studies in the future … especially liked the term paper requirement … Prof. Schubert is an excellent instructor, who is well prepared …" (excellence of instructor: 4.8 out of 5.0). SPIE Photonics North short course: "Very good and clear in presentation …" (numerical score 4.4 out of 5.0). ECSE 6960 mid-course and final feedback by students: "Professor has provided all course materials … I really appreciate it … well presented … technical support was great … my learning experience has been good … responses to my homework questions have been very timely … I have enjoyed the course and found it interesting and useful … homework assignments have been extremely beneficial … the set of notes is very comprehensive … good class structure …" (numerical scores of students' course and instructor evaluation: 5.0 out of 5.0). Comment on web educational materials: "Notes look very thorough and clear …"

2006 – SPIE Photonics West short course student feedback: "Excellent, knowledgeable … excellent presentation …" (numerical score 3.91 out of 5.0). ECSE 6961 (Light-emitting diodes and solid-state lighting): "excellent … Informative, comprehensive and interesting … the best part of this course, in terms of my learning experience, has been the course materials … just an outstanding class … so much is newly discovered and so much is current on-going research and commercially relevant … Dr. Schubert is obviously a leading researcher and did a great job of conveying his experience and understanding to the class … a highly technical topic that still makes a good general conversational topic … I liked the course material … I liked the fact that Prof. Schubert lectured directly from the textbook … I liked the structure of the course … I learned a lot about lasers and LEDs and other optical devices … it is a basic and fundamental class … the instructor gives ideas, concepts, and samples very clearly … very good course … students interested in LEDs and solid-state lighting are strongly recommended to take it … liked the overall coverage … the teaching pace was good … he covered a lot of material that is

Pictiva EX2054
Samsung v Pictiva
IPR2024-01094

important for the subject, but it was clearly always related to the topic … the manuscript that he let us use was excellent in my opinion … the most important thing I liked about the course was the course material and the structure of the course … right amount of homework and the two exams and the term paper presentation … it was great to learn this course from someone who is a world leader in this field … well-organized material … liked the course format … organization was good … allowed me to know exactly what we were covering so I could look through the material prior to the lecture … course content was good, starting with LED basics and covering materials through modern technologies, and then a look at solid-state lighting and sort of an intro to communication devices … good fundamentals in LEDs … GREAT Professor … awesome course … informative course … ability to view course materials online was helpful … very fruitful course … covering a lot of materials … very good and very important for graduate students to take this one … for people in industry it's also useful … for the instructor, this course is thought through very clearly … the text book is also very good … great course … excellent instructor … cute instructor … course is very good … I benefited a lot from it …" (numerical scores: 4.7 out of 5.0). ECSE 2210 (Microelectronics Technology) student comments "Excellent teaching method … I like that the Professor asks random questions at the end of class – it helped me understand the subject better … I thought Prof. Schubert was fabulous … his organization of the class encouraged learning … I highly recommend this class to everyone … a devoted and involved teacher … displayed more enthusiasm in teaching than other Professors I had … he also seemed to have a philosophy about teaching that was beyond helping students get good grades … he emphasized real-world applications of material and had general advice about working in the real world after leaving academia … helpful … although he was harder in grading and exams, Prof. Schubert challenged us more and made the course more interesting … the many class activities provide lots of practice of materials just learned … provided good back-up information … made sure students understand concepts …thank you for asking students questions during class to reinforce concepts … thank you for allowing open book exams …" (numerical scores: excellence of teacher 4.4 out of 5.0; excellence of course 4.3 out of 5.0; overall average of ratings 4.4 out of 5.0)

2007 – Book review by Steven J. Wojtczuk (Lexington, MA, USA) on "Light-Emitting Diodes" (E.F. Schubert, Cambridge University Press, Cambridge UK, 2003) on amazon.com (March 14, 2006): "Schubert (RPI) has written an excellent book on LEDs that manages to explain and derive simple quantitative models for many phenomena of current interest … many monographs are a compendium of results in the field with hundreds of references … in contrast, Schubert, while giving copious references, is the sole author, leading to a coherent presentation well suited to learning … there are plentiful and good figures and drawings, as well as many exercises and solutions integrated into the text …" SPIE photonics West Short Course: "Excellent talk …" ECSE 2210 (Microelectronics Technology) "Thank you … great course … excellent instructor … interesting course … appreciated that you did not lecture completely from the slides and that you probed the class to ensure that we were understanding the key points … course is fine … good professor … Professor Schubert is one of the best lecturers I had … the pace at which he moves the topic, the way he explains things, and the manner in which he asks students questions all came together to help me learn much more form his lectures than I could on my own … instructors are absolutely very intelligent … Professor Schubert was a good professor … I actually learned things when Professor Schubert taught …" ECSE 6968 (Physical Foundations of Solid-State Devices) "The instructor explained every concept in a very simple and effective manner … I really enjoyed taking this course …" (numerical scores: 4.5 out of 5.0)

2008 – SPIE Photonics West short course feedback: "Very good … clear … very nice … answered questions readily …" (numerical score 4.3 out of 5.0) … ECSE 6961 (Light-emitting diodes and solid-state lighting) feedback: "It was great for me to have the opportunities to take two consecutive classes, *Physical Foundation* and *LEDs*, from you … both these classes have taught me a lot … they were very well organized … thank you for all the help … I have really enjoyed your classes … relevant material … very good professor …" (numerical scores: 4.3 out of 5.0) … Internet educational materials feedback: "I recently came across your course notes while trying to get a basic understanding about semiconductors and I wanted to thank you. Your notes for course "ECSE-2210 Microelectronics Technology" are the most useful and informative thing I have found on semiconductors on the Internet. I'm a chemist by trade and this is a great introduction for me …" 2007 Chautauqua Short Course and High School Teacher Summer Course, held at RPI June 26 and July 12, 2007 (numerical average of scores: 9 out of 10) … ECSE 6968 (Physical Foundations of Solid-State Devices) feedback: "Prof. Schubert is one of the best professors I've ever had … his ability to explain difficult and complex materials in a clear and concise manner is unmatched … the presentations, although time consuming, I felt were a great idea … thanks for your efforts professor! … I have really enjoyed taking this course …" By email: "Thank you professor … it has been a pleasure taking this course with you …" (numerical scores: 4.4 out of 5.0)

2009 – SPIE Photonics West short course feedback by students: "One of the best short courses I have taken … it was very nice to hear about the history of LEDs … very interesting but also very theoretical …" (numerical score 4.1 out of 5.0). ECSE 2210 (Microelectronics Technology) "Great course … instructors were excellent … encourages students to stay up to date with the subject matter … Thanks for this well-organized class … [the instructor] tries

Pictiva EX2054
Samsung v Pictiva
IPR2024-01094

to get students to come out with the best grade possible … this was a good class …" ECSE 6968 (Physical Foundations of Solid-State Devices) feedback by students: "It is really an excellent course … clear hand script … great professor! …" (numerical scores: 4.7 out of 5.0)

2010 – SPIE Photonics West short course feedback by students: "Good to get the latest data and charts … very good … very broad course and well organized … it was great …" (numerical score 4.04 out of 5.0) … ECSE 6961 (Light-emitting diodes and solid-state lighting) feedback by students: "A good course … this was a wonderful course … it has given me a lot of understanding … the course has inspired me to take up LED research … useful … straight forward … very good advisor … good course …" (numerical scores: 4.3 out of 5.0) … ECSE 6220 (Physical Foundations of Solid-State Devices) feedback by students: "Overall excellent course … Professor Schubert is a good teacher … he can explain every discipline very clearly and relate them to practical applications … I like his teaching style very much … overall, it was a nice course … material explained in a clear organized manner …" (numerical scores: 4.7 out of 5.0)

2011 – SPIE Photonics West short course feedback: "Very nice overview … instructor was excellent! … very good instructor … I would recommend lengthening to 6 hours … excellent presentation, materials and text … thanks … very clear and easy to follow … to be recommended … excellent presentation … good compromise for a person with a busy schedule …" (numerical score 4.45 out of 5.0); … ECSE 2210 (Microelectronics Technology) "This was a great course … I enjoyed Professor Schubert's views … I was successful … this course was taught very well … this subject I now find quite interesting and am no longer intimidated by it … I liked the material of this course … thank you …" (numerical scores: 3.3 out of 5.0); Feedback on book *Light-Emitting Diodes*: "I am a graduate student from National Chiao Tung University, Taiwan … your wonderful book *Light-Emitting Diodes*, both first- and second-edition, gave me a lot of information and help … I would like to ask when can the third of the masterpiece be published? I wish I can get it as soon as possible and study more about the lighting devices; Feedback on Internet pages: I found your website and information […] quite enlightening and provides a great start … I simply wish to quickly express my thanks and gratitude." Feedback on book *Physical Foundations of Solid-State Devices*: "Dear Prof. Schubert, I have read your book Physical Foundations of Solid-State Devices and I must say it is amazing the explanations are really good and I am most thankful that you have decided to put the book online thank you." Itamar Jade Balla, The Israel Institute Of Technology. Feedback on book *Light-Emitting Diodes* by Trung Nguyen (San Jose, California): "It is a good book about Light Emitting Diodes (LEDs). It provides very good info and it is a good reference for engineers who work in the LED field"; … ECSE 6220 (Physical Foundations of Solid-State Devices) feedback: "Amazing course … great instructor … very good course … The text and lectures were very useful and informative … I definitely learned a lot from taking this course … I liked the course materials! …" (numerical scores: 4.6 out of 5.0)

2012 – Feedback on Internet-based materials: "I'm Cheng Liu [Wuhan National Laboratory for Optoelectronics, China], currently a graduate student major in Physical Electronics … I deeply admire your profound knowledge on this field and your unselfish sharing of it …"; … SPIE Photonics West short course feedback: "Dr. Schubert was very clear and very patient with people who had questions … the materials were comprehensive …"; Feedback on Internet-based materials: "Supremely-rich course contents posted on your website. Thank you very much for showing such awesome materials for the world to see …" (Prof. Natee Tangtrakarn, Thailand) … ECSE 6962 (Light-Emitting Diodes and Solid-State Lighting) feedback: "… very interesting course … Professor Schubert did a great job explaining the material … his textbook is very clear and understandable … nice course … I learned a lot of new things by taking it …" (numerical scores: 4.7 out of 5.0)

2013 – ***SPIE Photonics West short course*** feedback (SC-052, Light-Emitting Diodes): "Great instructor with admirable combination of knowledge in academic and commercial knowledge … I appreciated the depth of his knowledge and experience … the length of the course was good … Overall this was an excellent course … Thank you … course is very easy and I understand it easily … Excellent course! … Instructor was fantastic -- clear, explicit, took questions as we went and answered well … One of the best SPIE courses I've taken (and I've taken lots)! … Great course -- thanks! … I was happy that the slides were updated with 2012 data". ***RPI course numerical scores (ECSE-6962, Light-Emitting Diodes and Solid-State Lighting)***: Numerical score of students' evaluations: 4.67 out of 5.0; Verbatim comments: "The course is pretty good … needs no improvement … I can appreciate the more wide-angle approach from the course … These areas are very important and previously I had no knowledge of them … It was a pleasure attending your class …" ***RPI course numerical scores (ECSE-6968, Physical Foundations of Solid-State Devices)***; Verbatim comments: "It has been an awesome experience of learning for me in this course … Thank you for everything … Thank you for the great semester … Have a good break … Thank you for the great semester … Have a good break … Professor, thank you for an engaging and interesting class this semester … I enjoyed the subject of my paper and learned quite a bit particularly about GaN, which I had not had a chance to really do any research into before … Very good and interactive class … I liked the style of the class … I thought the topics covered were very interesting … I think I got much more out of the class this way than if we would have followed the manuscript chapter by chapter …" Numerical score of students' evaluations: 4.83 out of 5.0

Pictiva EX2054
Samsung v Pictiva
IPR2024-01094

2014 – *SPIE Photonics West short course* verbatim feedback (SC-052, Light-Emitting Diodes): "Very knowledgeable instructor ... the course was packed with information ... handouts are excellent ... Excellent presentation and contents ... the color rendering section which was interesting and fun ..." Numerical score of students' evaluations: 4.36 out of 5.0; ***RPI Course ECSE-2210 Microelectronics Technology***; Verbatim comments: "Instructor is clearly very knowledgeable about the topics ... Very clear and comprehensive ... This is the best class ever ... I'm quite enjoying this course ... I don't really have any recommendations on things to change ... The homework and lectures being sent out at the beginning was very helpful ... Both the TA and the professor were able to explain things very well ... I think he is a good lecturer ... I think the homework each was very, very good at teaching me the material, and the exam was fairly graded and easy to understand ... I definitely like the professor and I would have him again ... A good class ... I enjoyed Prof. Schubert's style of teaching ... I would still recommend Prof. Schubert as a professor ... Microelectronics is a good class ... Prof. Schubert keeps it interesting though ... he's a great professor ... The two TAs are also great ..." Numerical score of students' evaluations of instructor: 4.25 out of 5.0. ***RPI Course ECSE-6220 Physical Foundations of Solid-State Devices***; Verbatim comments: "The book and lectures seem to be entirely in sync with one another ... it really enforces the material covered in the book ... the material is covered thoroughly and improves students' understanding of quantum physics ... The class was interesting with excellent learning materials ... I loved how the course was so well organized ... The lectures were very well put together ..." Numerical score of students' evaluations of instructor: 4.75 out of 5.0.

2015 – *SPIE Photonics West Short Course SC-052 titled Light Emitting Diodes*, Verbatim comments: "I was very satisfied with this short course" Numerical score of students' evaluations: 4.53 out of 5.0; ***RPI Course ECSE-6960 Light-Emitting Diodes***; Verbatim comments: "the class has been excellent! ... I've learned a good amount about LEDs ... Also I'd like to thank you for a great semester and say that you've peaked my interest in the LED field! ... I would like to add that the course was an excellent experience for me and that I really enjoyed learning about LED technology! ... Thank you very much for teaching such a wonderful class ... It was a great learning course" Numerical score of students' evaluations: 5.0 out of 5.0. ***RPI Course ECSE-2100 Fields and Waves 1***; Verbatim comments: "This class is going perfectly and I love the way it's run ... The material is great and understandable ... the pace is perfect ... I like the pacing of the course and the fact that we spend time really developing an understanding of the theory and concepts that we will be using ... I like the Professor ... The lectures are great ... I really enjoy this professor and he is very understanding of the students' levels of learning and focused on that ... Professor Schubert is clear and easy to understand ... Overall a very good professor ... very knowledgeable and helpful ... I thought the professor was very knowledgeable and was an excellent instructor ..." Numerical score of students' evaluations of instructor: 4.17 out of 5.0.

2016 – *SPIE Photonics West Short Course SC-052 titled Light Emitting Diodes*, Verbatim comments: "This has been my favorite course (over 3 years) ... Well-structured presentation, and well given ... I was surprised by how much I didn't know. I learned a lot ... Explained difficult concepts in a clear and simple manner ... Able to go "off script" to clarify during questions." Numerical score of students' evaluations: 4.56 out of 5.0; ***RPI Course ECSE-2100 Fields and Waves 1***; Verbatim comments: "This is cool material ... This class was one of the most well put together I have ever taken in terms of lecture pace, lecture clarity, TA support, and quality of teaching and communication ... The lectures never felt too long or too short, the pace was good, I never felt lost or without an option to turn for help ... The homework was neither too long nor too short, and was well balanced with conceptual and quantitative questions ... Prof. Schubert's lecture style was very clear, concise, and to the point, with many useful examples in real life scenarios which made the material more interesting ... Very well done ... Great class ... I liked the pace of the class ... it helps with understanding the material a lot ... The labs [...] were fun and very educational ... Overall, I learned a lot from this course ... The speed of the class is perfect ... I really got a chance to learn ... This professor is very good ... Also, [in] the lab section I was able to really break down what I learned in class ... Schubert has the neatest handwriting of any professor I've ever had in my 3 years here ... His diagrams are extremely neat and he is easy to understand verbally too ... Lots of conceptual knowledge covered ... Overall [...] it was an enjoyable class ..." Numerical score of students' evaluations: 5.0 out of 5.0. ***RPI Course ECSE-2210 Microelectronics Technology***; Verbatim comments: "So far, this has been one of my favorite courses at RPI … I'm a huge fan of Prof. Schubert's ability to clearly describe concepts both conceptually and mathematically … Class activities […] were really helpful! … Otherwise the class is great! … Prof Schubert knows his stuff … Best professor I have had … This course was well taught … Professor Schubert's explanations were very clear and understandable … he took time to address student questions with in-depth answers … I feel as though I gained a lot from this course, especially with regards to explanations of why certain things in ECSE-2050 (Intro to Electronics) occur the way they do like where the diode property comes from and how material properties of electronic components give rise to the very real circuit characteristics we see in ECSE-2050 labs … In this sense, Microelectronics Tech is a very good companion class to Intro to Electronics, and I highly recommend future students take them at the same time … this was a quite good class … Best MET instructor … I was so actively engaged during the lectures that it was kind of scary ... The lecture notes and lectures were mostly great … The material covered in it was succinct and interesting,

Pictiva EX2054
Samsung v Pictiva
IPR2024-01094

yet still covered the knowledge needed to tackle engineering problems in semiconductors …" Numerical score of students' evaluations: 4.64 out of 5.0.

2017 – ***RPI Course ECSE-2100 Fields and Waves 1***; Verbatim comments: "I thoroughly enjoy this class … Schubert is awesome! … Enjoyed the class … He is a good teacher … Most teachers talk really fast making it hard to follow … Schubert talks slow and explains things really well … Professor Schubert is an excellent professor, and has been one of my favorites at RPI so far … He made a difficult topic approachable, interesting and understandable … I hope I have him as a professor in the future … Thank you … I enjoyed this class, especially the labs … Lectures were good too … great class! … The professor does a great job of engaging the students by asking questions and making students ask questions to make them think about the labs … This course is overall excellent in that the professor does know the pace of class and gives feedback appropriately …"; Numerical score of students' evaluations: 4.63 out of 5.0. ***SPIE Photonics West Short Course SC-052 titled Light Emitting Diodes***, Verbatim comments: "the course covered a wide variety of concepts …" Numerical score of students' evaluations: 4.03 out of 5.0.

2018 – ***RPI Course ECSE-2100 Fields and Waves 1***; Verbatim comments: "Professor Schubert is great and very entertaining to listen to in the lab and in lecture … Really appreciate how Prof. Schubert structures lectures … Schubert is great! … The professor is excellent at relaying concepts … This course is very interesting and it goes at a good pace … One of the better professors here at RPI … He cares about his students and helps them to learn the most through lectures and labs … Fantastic course that goes into great detail into not only knowing the material but also understanding the material … [the course] has been clarified and allowed for a greater learning process." Numerical score of students' evaluations of instructor: 4.17 out of 5.0. ***RPI Course ECSE-6220 Physical Foundations of Solid-State Devices***; Verbatim comments: "Perfect professor, no complaints." Numerical score of students' evaluations (median): 5.0 out of 5.0.

2019 – ***RPI Course ECSE-2100 Fields and Waves 1***; Verbatim comments by students: "Schubert is excellent in relating information in a practical manner especially in the lab … Overall, both the professor and TAs prioritize if students understand material over semantics in reports and homework, which is really helping me in the course, and feedback given is incredibly helpful in both … Schubert is a mystery. He speaks very slowly and clearly, but you somehow learn everything at a very fast rate … Class […] being just the right amount focused and adequately paced … Overall great class … Labs were educational and we were allowed to have fun with it … Otherwise great lectures, notes were available and understandable … this was one of my favorite classes … Very well run by Schubert … lectures were informative and easy … labs were fun … The TA's were allowed to have personalities and interact with the students … 10/10 would take again … Schubert was okay … The best parts about the course for me were everything was online and I could copy the notes at my leisure with my busy schedule … I also liked that exams were open book and we had a lot of opportunities for practice … I have nothing but good things to say about both TAs and Professor Schubert – this has been my favorite class this semester … Though challenging, I have found the course material very interesting and all teachers have been excellent … Course was good … I like Professor Schubert's class notes online. They're super well written and helpful." Numerical score of students' evaluations of instructor: 4.63 out of 5.0 (average) and 5.0 out of 5.0 (median).

2019 – ***RPI Course ECSE-6280 Light Emitting Diodes***; Verbatim comments by students: "This was a great course … I learned a lot during the semester … Great class … Really enjoyed Professor Schubert's expertise on the subject … Gives both in-depth technical knowledge as well as high level background to better understand the driving factors of the LED industry … Would highly recommend it to anyone in ECSE." Numerical score of students' evaluations: 4.83 out of 5.0 (average) 5.0 out of 5.0 (median).

2020 – ***RPI Course ECSE-2100 Fields and Waves 1***; Verbatim comments by students: "I really enjoyed this class … the cool labs with good help and good lectures made me really enjoy this class and help the information stick in my head better … The labs provided a great use to show theory in practice and how certain concepts are applied to real-life applications … The laboratory session was also a great time to ask questions and have in-depth talks about the material … I would have already commended this professor for class organization and material availability prior to online courses (course material easily available, organized well, and easy to understand; interactive lectures; interactive labs better than most other ECSE courses), Prof. Schubert handled the change to online coursework best of all of my professors and maintained the quality of lecture almost perfectly … The 'live' online classes were interactive and courteous by students and the professor, organized, and just as in-depth as before, even including miniature homemade demonstrations and experiments … The course was taught very fundamentally which allowed me to think and learn more … Thank you, Professor Schubert … I really missed your live lectures and labs! … Professor Schubert made the best of the situation of online learning … Great class … I learn a lot from this class … I enjoy lab sessions and try never to miss any class … Prof. Schubert is really good!" Numerical score of students' evaluations: 4.75 out of 5.0 (average) 5.0 out of 5.0 (median).

2020 – ***RPI Course ECSE-2050 Introduction to Electronics***; Verbatim comments by students: "I really enjoyed how easy it was to follow along with the lecture … I really enjoyed the content of this course, and I feel that the

Pictiva EX2054
Samsung v Pictiva
IPR2024-01094

applications of this content in the lab were extremely effective to help students understand the content … the concepts in general were extremely interesting … I liked how the lecture sessions for this class provided much more room for discussion and examples than nearly any other ECSE course I have taken at RPI so far … Schubert was very aware of the students ability to fully comprehend the topic ... He was very patient with the students that needed extra explaining … I learned a lot about the course material … I liked the one-on-one attention we received in the in-person lab … I enjoyed the in person laboratory sessions, they were a good place to get all my questions answered … I really like the lecture notes and the detailed diagrams / graphs that help explain the concepts … Professor Schubert does a great job of breaking down the material, he always tries to engage the students in every lecture … Very clear notes, responded quickly, answered any confusing questions really well, and very nice and accommodating towards the current COVID situation everyone is going through … He had very organized notes that helped especially with the difficulties of online learning … I loved the explanation of diodes, it's never been so clear to me before! … Examples were excellent … The course was great! … I learned a lot and this course stimulated my interest … Very engaging … stimulates participation … Professor Schubert was a refreshing exception … the professor was very knowledgeable in the subject area … explanations were clear and easy to understand … I really like the format of this class compared to my other classes … I really enjoyed the format … Very detailed lecture, very helpful with students, made very complex material easy to understand … Prof is really understanding and cares about his students … He is really willing to work with us which I found is really rare at RPI ... He is easily one of the best professors I have had … He cares most about whether we are learning and understanding, rather than following his desired schedule perfectly ... Cannot say anything bad about Prof Schubert … Class is great" Overall instructor rating: 4 out of 5. Overall course rating: 4 out of 5.

2021 – ***RPI Course ECSE-2050 Introduction to Electronics***; Verbatim comments by students: "Class has been going smoothly … Professor Schubert includes real world-examples of devices in his lectures, showing the importance of our course materials … He is always very considerate of students, trying to adapt to what would help people most … He engages students in lectures." Overall instructor rating: 4.8 out of 5.0. Overall course rating: 4.6 out of 5.0.

2021 – ***RPI Course ECSE-2050 Introduction to Electronics***; Verbatim comments by students: "Professor is always able to conceptually answer our questions, and run through circuit analysis with us if the results we're measuring don't match up … I tried taking this class once before, and I failed it. This time around, I feel like I know everything about everything. I had never imagined just what a difference teaching style could make in my ability to learn information, but this class is so much more welcoming to me this time around. It was with a different professor the first time. I much prefer Professor Schubert and the way he conveys information so effortlessly. He also seems like he's passionate about teaching the information and his handwritten notes are astonishingly detailed … Great professor! I appreciate Professor Schubert taking the time to clarify different topics and always checking in with the students. He seems to genuinely care about our education. He is strict about deadlines, more so than other professors at least, but I think he has earned that … Professor Schubert is very friendly to his students … He was very helpful and one of the few professors who actually stays and talks to students all throughout the lab period. It was very helpful because often I would think that I fully understood a concept and then he would ask a question that would either stump me or reinforce information. Additionally he kept lectures short and to-the-point, which I appreciate." Overall instructor rating: 4.3 out of 5.0. Overall course rating: 4.3 out of 5.0.

2022 – ***RPI Course ECSE-2050 Introduction to Electronics***; Verbatim comments by students: "Great professor! … Handwriting is amazing … His notes are flawless and easy to understand … This course covers much more than most other EE courses I've taken, and yet I feel as though this has been the easiest EE course due to his teaching abilities … Professor Schubert is a very knowledgeable professor … It's clear that he wants his students to learn …" Overall instructor rating: 4.3 out of 5.0. Overall course rating: 4.4 out of 5.0.

2022 – ***RPI Course ECSE-2210 Microelectronics Technology***; Verbatim comments by students: "I think Schubert does a great job of teaching … He makes the pn junctions as interesting as he can … I also love the chalk-board! So great, every professor should be forced to use it, because you can follow the work so smoothly (not like powerpoints) … I would not change the class … I also like how Prof. Schubert asks for feedback from everyone after class … Course was at a great pace and the level of difficulty … Professor Fred Schubert is one of my most favorite professors at RPI … I am sad to see in the course schedule for Spring 2023 that he is not teaching any 4000 level ECSE courses … I think that the department and students are missing out by not having someone as knowledgeable as him teaching more conceptually hard topics because Professor Schubert does that exceptionally … Best ever lecture experience, clear structure of lecture notes, comprehensive homework that helps to improve students' understandings, and always eager to solve students' questions … Thanks for another great course Professor!"

Pictiva EX2054
Samsung v Pictiva
IPR2024-01094

Post-doctoral & visiting personnel for which I served as Major Research Advisor

Dr. Li-Wei Tu	Post-Doctoral Fellow	1988–1990
Dr. Neil Hunt	Post-Doctoral Fellow	1991–1993
Dr. Matthias Passlack	Post-Doctoral Fellow	1993–1995
Dr. Wolf Grieshaber	Post-Doctoral Fellow	1995–1997
Dr. Thomas Gessmann	Post-Doctoral Fellow	2000–2002
Dr. Jong Kyu Kim	Post-Doctoral Fellow	2003–2005
Dr. Min Ho Kim, SEMCo	Visiting Engineer	2007–2008
Prof. Ji-Myon Lee, Sunchon Univ.	Visiting Professor	2007–2008
Dr. Jaehee Cho	Post-Doctoral Fellow	2008–2009
Dr. Yongjo Park, Samsung LED	Visiting Vice President	2010–2012
Dr. Yangang Andrew Xi	Visiting Scientist	2013–2014
Dr. Guan-Bo Lin	Post-Doctoral Fellow	2014–2015

Graduate students for which I served as Major Research Advisor

Dr. Dean A. Stocker	Ph.D. Dissertation	Ph. D. completed in 1999
Xiaoyun (Jane) Guo	Master Thesis	M.S.E.E. completed in 1999
John W. Graff	Master Thesis	M.S.E.E. completed in 1999
Dr. Ian D. Goepfert	Ph.D. Dissertation	Ph. D. completed in 2000
Yun-Li Li	Master Thesis	M.S.E.E. completed in 2000
Dr. Xiaoyun (Jane) Guo	Ph.D. Dissertation	Ph. D. completed in 2001
Dr. John W. Graff	Ph.D. Dissertation	Ph. D. completed in 2002
Dr. Erik L. Waldron	Ph.D. Dissertation	Ph. D. completed in 2002
Jay M. Shah	Master Thesis	M.S.E.E. completed in 2002
Dr. Yun-Li Li	Ph.D. Dissertation	Ph. D. completed in 2003
Jingqun ("JQ") Xi	Master Thesis	M.S. completed in 2003
Yangang Andrew Xi	Master Thesis	M.S. completed in 2003
Ronald Jackson	Master Thesis	M.S. completed in 2004
Sameer Chhajed	Master Thesis	M.S. completed in 2004
Hong Luo	Master Thesis	M.S. completed in 2005
Xiaolu Li	Master Thesis	M.S. completed in 2005
Kaixuan Chen	Master Thesis	M.S. completed in 2005
Dr. Jay M. Shah	Ph.D. Dissertation	Ph. D. completed in 2006
Frank Mont	Master Thesis	M.S.E.E. completed in 2006
Dr. Hong Luo	Ph.D. Dissertation	Ph. D. completed in 2006
Dr. Jingqun ("JQ") Xi	Ph.D. Dissertation	Ph. D. completed in 2006
Dr. Yangang Andrew Xi	Ph.D. Dissertation	Ph. D. completed in 2006
Won Seok Lee	Master Thesis	M.S. completed in 2007
Qi Dai	Master Thesis	M.S. completed in 2007
Di Zhu	Master Thesis	M.S. completed in 2007
Jiuru Xu	Master Thesis	M.S. completed in 2007
Ahmed Noemaun	Master Thesis	M.S. completed in 2007
Roya Mirhosseini	Master Thesis	M.S. completed in 2008
David Poxson	Master Thesis	M.S. completed in 2008
Qifeng Shan	Master Thesis	M.S. completed in 2009
Ming Ma	Master Thesis	M.S. completed in 2010
Xing Yan	Master Thesis	M.S. completed in 2010
Dr. Roya Mirhosseini	Ph.D. Dissertation	Ph. D. completed in 2010
Dr. Sameer Chhajed	Ph.D. Dissertation	Ph. D. completed in 2010
Dr. Jiuru Xu	Ph.D. Dissertation	Ph. D. completed in 2011
Dr. Frank Mont	Ph.D. Dissertation	Ph. D. completed in 2011

Pictiva EX2054
Samsung v Pictiva
IPR2024-01094

Dr. Wonseok Lee	Ph.D. Dissertation	Ph. D. completed in 2011
Dr. Di Zhu	Ph.D. Dissertation	Ph. D. completed in 2011
Dr. Qi Dai	Ph.D. Dissertation	Ph. D. completed in 2011
Dr. Ahmed Noemaun	Ph.D. Dissertation	Ph. D. completed in 2011
Dr. David Poxson	Ph.D. Dissertation	Ph. D. completed in 2011
Dr. Qifeng Shan	Ph.D. Dissertation	Ph. D. completed in 2012
Dr. Ann Mao	Ph.D. Dissertation	Ph. D. completed in 2013
Dr. Xing Yan	Ph.D. Dissertation	Ph. D. completed in 2013
Dr. Ming Ma	Ph.D. Dissertation	Ph. D. completed in 2013
Dr. David Meyaard	Ph.D. Dissertation	Ph. D. completed in 2013
Dr. Guan-Bo Lin	Ph.D. Dissertation	Ph. D. completed in 2013

Pictiva EX2054
Samsung v Pictiva
IPR2024-01094

Expert Witness Consulting Service

1997 ***Case***: Hewlett-Packard Company versus CEO of United Epitaxy Company (Taiwan)
Nature: Trade secret misappropriation
Venue: U.S. District Court.
Law firm: Morrison & Foerster LLP, Washington DC.
Role: I served as technical expert witness on behalf of United Epitaxy (Defendant). I wrote one or more expert reports.

1998 ***Case***: Hewlett-Packard Company versus United Epitaxy Company (Taiwan)
Nature: Patent infringement.
Venue: U.S. District Court for the Northern District of California.
Law firm: Quinn Emanuel Urquhart Oliver and Hedges LLP
Role: I served as technical expert witness on behalf of United Epitaxy (Defendant). I wrote one or more expert reports.

2006 ***Case***: Kerr Company versus 3M and Dentsply International Company.
Nature: Patent infringement.
Venue: U.S. District Court for the Western District of Wisconsin.
Law Firm: Woodcock Washburn LLP, Philadelphia, Pennsylvania.
Role: I served as technical expert witness on behalf of Dentsply (Defendant). I wrote one or more expert reports.

2006 ***Case***: Nichia Corporation (Japan) versus Seoul Semiconductor Company (Korea).
Nature: Design patent infringement.
Venue: U.S. District Court for Northern District of California, San Francisco Division.
Law firm: Foley & Lardner LLP Washington DC.
Role: I served as technical expert witness on behalf of Nichia (Plaintiff). I wrote one or more expert reports; I was deposed.

2008 ***Case***: Seoul Semiconductor (SSC) Company LTD (Korea) versus Nichia Corporation (Japan).
Nature: Patent infringement.
Venue: U.S. District Court for the Eastern District of Texas, Beaumont Division.
Law firm: Morrison & Foerster LLP, Palo Alto, California.
Role: I served as technical expert witness on behalf of Nichia (Defendant). I wrote one or more expert reports; I testified in District Court during the claim construction / Markman hearing.

2008 ***Case***: Professor Gertrude Rothschild versus Toshiba Company (Japan).
Nature: Patent infringement.
Venue: U.S. International Trade Commission (ITC), Washington DC.
Law firm: DLA Piper LLP, San Francisco California.
Role: I served as technical expert witness on behalf of Toshiba (Defendant). I wrote one or more expert reports; I was deposed.

2008 ***Case***: Honeywell Company versus Cree Company and Lumileds Company.
Nature: Patent infringement and Reexamination of patent.
Venue: U.S. District Court for the Eastern District of Texas, Marshall Division. Reexamination before the USPTO's Patent Trial and Appeal Board.
Law firms: Paul Hastings LLP, Washington DC and Ingrassia, Fisher & Lorenz PC, Washington DC.
Role: I served as technical expert witness on behalf of Honeywell (Plaintiff). I wrote one or more expert reports. I testified at the USPTO during a re-examination hearing.

Pictiva EX2054
Samsung v Pictiva
IPR2024-01094

2010 ***Case***: Landmark Screens Company versus MLB Company and Kohler.
Nature: Mishandling of a patent application.
Venue: U.S. District Court for the Northern District of California, San Jose Division.
Law firm: Keker & Van Nest LLP, San Francisco, California.
Role: I served as technical expert witness on behalf of MLB and Kohler (Defendant). Negligence in conjunction with a patent application; I wrote one or more expert reports.

2011 ***Case***: Koninklijke Philips Electronics N.V. versus Seoul Semiconductor (SSC) Company LTD.
Nature: Patent infringement.
Venue: U.S. District Court for the Central District of California Southern Division
Law firm: Latham & Watkins LLP, Washington DC.
Role: I served as technical expert witness on behalf of SSC (Defendant). I wrote one or more expert reports.

2011 ***Case***: Jeou-Nan Tseng versus Home Depot USA Inc. and Guangde LEDup Enterprise Inc.
Nature: Patent infringement.
Venue: U.S. District Court for the Western District of Washington at Seattle.
Law firm: DLA Piper, Philadelphia, Pennsylvania.
Role: I served as technical expert witness on behalf of Home Depot (Defendant). I wrote one or more expert reports.

2011 ***Case***: Lightpanels Ltd. Company versus Fuzhou F&V Photographic Company.
Nature: Patent infringement.
Venue: U.S. International Trade Commission (ITC), Washington DC.
Law firm: Locke Lord LLP, New York, New York.
Role: I served as technical expert witness on behalf of Fuzhou F&V and Nanguang Photographic (Defendant). I wrote one or more expert reports; I was deposed.

2012 ***Case***: Osram Company versus LG Company.
Nature: Patent infringement.
Venue: U.S. International Trade Commission (ITC), Washington DC.
Law firm: Finnegan, Henderson, Farabow, Garrett & Dunner, LLP, Washington DC.
Role: I served as technical expert witness on behalf of LG (Defendant). I wrote one or more expert reports; I was deposed; I testified at the ITC Hearing.

2012 ***Case***: Osram Company versus LG Company and Samsung Company.
Nature: Patent infringement.
Venue: U.S. International Trade Commission (ITC), Washington DC.
Law firm: Covington & Burling LLP, Washington DC.
Role: I served as technical expert witness on behalf of LG and Samsung (Defendant). I wrote one or more expert reports; I was deposed; I testified at the ITC Hearing.

2013 ***Case***: Chao Tai Electron Co. LTD. versus LEDup Enterprise Inc. and others.
Nature: Patent infringement.
Venue: U.S. District Court for the Central District of California.
Law firm: Hunton & Williams LLP, Washington DC.
Role: I served as technical expert witness on behalf of LEDup Enterprise Inc. and others (Defendants). I wrote one or more expert reports.

2013 ***Case***: Nichia Corporation versus Everlight Company and Emcore Company.
Nature: Inter Partes Review (IPR).
Venue: USPTO Patent Trial and Appeal Board.

Pictiva EX2054
Samsung v Pictiva
IPR2024-01094

Law firm: Foley & Lardner LLP, Washington DC.
Role: I served as technical expert witness on behalf of Nichia Corporation (Petitioner). I wrote one or more expert reports; I was deposed.

2014 ***Case***: Everlight Electronics Co. LTD. versus Nichia Corporation.
Nature: Patent infringement.
Venue: U.S. District Court for the Eastern District of Michigan, Southern Division.
Law firm: Foley & Lardner LLP, Washington DC.
Role: I served as technical expert witness on behalf of Nichia Corporation (Defendant). I wrote one or more expert reports; I was deposed; I testified at Phase 1 of trial (jury trial) and I testified at Phase 2 of trial (bench trial).

2014 ***Case***: LEDup Company versus Nicolas Holiday Company.
Nature: Patent infringement.
Venue: U.S. District Court for the Central District of California.
Law firm: Pendleton, Wilson, Hennessey, and Crow PC, Denver, Colorado.
Role: I served as technical expert witness on behalf of LEDup (Plaintiff). I wrote one or more expert reports.

2014 ***Case***: Nichia Corporation versus Everlight Electronics Co. LTD.
Nature: Patent infringement.
Venue: U.S. District Court for the Eastern District of Texas, Marshall Division.
Case number: 02:13-cv-702-JRG (E.D. Texas).
Law firm: Rothwell, Figg, Ernst & Manbeck PC, Washington DC.
Role: I served as technical expert witness on behalf of Nichia (Plaintiff). I wrote one or more expert reports; I was deposed; I testified at trial (bench trial).

2015 ***Case***: Cree Company versus Unity Opto, Unity Microelectronics, and Feit Electric Company
Nature: Patent infringement.
Venue: U.S. International Trade Commission (ITC), Washington DC.
Law firm: Alston & Bird LLP, Silicon Valley, East Palo Alto, California.
Role: I served as expert witness on behalf of Unity Opto Technology *et al*. (Defendants). I wrote one or more expert reports; I was deposed; I testified at trial (ITC Hearing).

2015 ***Case***: Honeywell International Inc. versus Cree Inc.
Nature: Inter Partes Review (IPR).
Venue: USPTO Patent Trial and Appeal Board.
Law firm: Arnold & Porter LLP, San Francisco, California.
Role: I served as expert witness on behalf of Honeywell International Inc. (Plaintiff). I wrote one or more expert reports.

2015 ***Case***: Honeywell International Inc. versus Cree Inc.
Nature: Patent infringement.
Venue: U.S. District Court for the District of New Jersey.
Law firm: Arnold & Porter LLP, San Francisco, California.
Role: I served as expert witness on behalf of Honeywell International Inc. (Plaintiff).

2015 ***Case***: Cree Inc. versus Kingbright Electronic Co. LTD and SunLED Corporation.
Nature: Patent infringement.
Venue: U.S. District Court for the Western District of Wisconsin.
Law firm: Hansen Reynolds Dickinson Crueger LLC, Milwaukee, Wisconsin.
Role: I served as technical expert witness on behalf of Kingbright and SunLED (Defendants). I wrote one or more expert reports; I was deposed.

Pictiva EX2054
Samsung v Pictiva
IPR2024-01094

2016 ***Case***: Acuity Brands Lighting Inc. versus Lynk Labs Inc.
Nature: Inter Partes Review (IPR).
Venue: USPTO Patent Trial and Appeal Board.
Law firm: Haynes Boone LLP, Chicago, Illinois.
Role: I served as technical expert witness on behalf of Lynk Labs (Plaintiff). I wrote one or more expert reports.

2016 ***Case***: Godo Kaisha IP Bridge 1 Company versus Broadcom Company and others.
Nature: Patent infringement.
Venue: U.S. District Court for the Eastern District of Texas, Marshall Division.
Law firm: Ropes and Gray LLP, New York City, New York.
Role: I served as technical expert witness on behalf of IP Bridge 1 (Plaintiff). I wrote one or more expert reports; I was deposed.

2016 ***Case***: TSMC Company versus Godo Kaisha IP Bridge 1 Company.
Nature: Inter Partes Review (IPR).
Venue: USPTO Patent Trial and Appeal Board.
Law firm: Greenblum & Bernstein, P.L.C., Reston, Virginia.
Role: I served as technical expert witness on behalf of IP Bridge (Patent Owner). I wrote one or more expert reports; I was deposed.

2017 ***Case***: Harvard University versus Micron Technology Company.
Nature: Patent infringement.
Venue: U.S. District Court for MA, Boston; U.S. District Court for Delaware, Wilmington.
Law firm: Weil Gotshal & Manges LLP, Redwood Shores, California.
Role: I served as technical expert witness on behalf of Micron Technology Company (Defendant). I wrote one or more expert reports; I was deposed.

2017 ***Case***: Seoul Viosys Company versus P3 Company.
Nature: Patent infringement.
Venue: U.S. District Court, Southern District of New York, New York City.
Law firm: Holland & Knight LLP, New York City, New York.
Role: I served as technical expert witness on behalf of Seoul Viosys (Plaintiff). I wrote one or more expert reports.

2017 ***Case***: Nitride Semiconductor Company versus Rayvio Company.
Nature: Patent infringement.
Venue: US District Court for the Northern District of California.
Law firm: Dentons LLP, Palo Alto, California.
Role: I served as technical expert witness on behalf of Rayvio (Defendant).

2018 ***Case***: CRX Tech LLC versus Samsung Electronics Co. LTD.
Nature: Patent infringement.
Venue: U.S. District Court for the Eastern District of Texas, Marshall Division.
Law firm: Arnold & Porter LLP, Los Angeles, California.
Role: I served as technical expert witness on behalf of Samsung (Defendant).

2018 ***Case***: Macom Technology Solutions Holdings Inc. versus Infineon Technologies AG.
Nature: Patent infringement.
Venue: U.S. District Court Central District of California Western Division, Los Angeles.
Law firm: Perkins Coie LLP, Denver, Colorado.

Pictiva EX2054
Samsung v Pictiva
IPR2024-01094

Role: I served as technical expert witness on behalf of Macom (Plaintiff). I wrote one or more expert reports; I was deposed.

2018 ***Case***: Vizio Inc. versus Nichia Corporation.
Nature: Inter Partes Review (IPR).
Venue: USPTO Patent Trial and Appeal Board.
Case number: Case No. IPR-2017-01608 and IPR-2017-01623 (PTAB).
Law firm: Rothwell, Figg, Ernst & Manbeck, P.C., Washington DC.
Role: I served as technical expert witness on behalf of Nichia Corporation (Patent Owner). I wrote one or more expert declarations.

2018 ***Case***: Lowe's Companies Inc. versus Nichia Corporation.
Nature: Inter Partes Review (IPR).
Venue: USPTO Patent Trial and Appeal Board.
Case number: Case No. IPR2017-02014 (PTAB).
Law firm: Rothwell, Figg, Ernst & Manbeck, P.C., Washington DC.
Role: I served as technical expert witness on behalf of Nichia Corporation (Patent Owner). I wrote one or more expert declarations.

2018 ***Case***: Ultravision Technologies LLC versus Prismaflex USA Inc.
Nature: Patent infringement.
Venue: US International Trade Commission (ITC), Washington DC.
Case number: Investigation No. 337-TA-1114 (ITC)
Law firm: Womble Bond Dickinson LLP, Winston-Salem, NC
Role: I served as technical expert witness on behalf of Prismaflex USA (Defendant). I wrote one or more expert reports. I was deposed.

2019 ***Case***: Carl Zeiss AG versus Nikon USA Inc.
Nature: Patent infringement.
Venue: US International Trade Commission (ITC), Washington DC.
Case number: Investigation No. 337-TA-1129 (US ITC)
Law firm: Morrison & Foerster LLP, Los Angeles CA.
Role: I served as technical expert witness on behalf of Nikon USA (Defendant). I wrote one or more expert reports. I was deposed.

2019 ***Case***: ASM IP Holding B.V. versus Hitachi Kokusai Electric Inc.
Nature: Arbitration related to IP licensing dispute.
Venue: ICDR (International Center for Dispute Resolution), Palo Alto CA.
Case number: Case No. ICDR 01-17-0005-1963 (Palo Alto CA)
Law firm: Quinn Emanuel Urquhart & Sullivan LLP, San Francisco CA.
Role: I served as technical expert witness on behalf of ASM IP Holding B.V. (Complainant). I authored multiple witness statements. I testified at the Arbitration Hearing.

2019 ***Case***: Power Integrations Inc. versus C. W. Park.
Nature: Breach of employment contract.
Venue: US District Court, Northern District of California, San Jose Division.
Case number: 5:16-cv-02366-BLF (Northern District of California)
Law firm: Miclean Gleason LLP, San Mateo CA.
Role: I served as technical expert witness on behalf of Power Integrations Inc. (Complainant). I performed analyses relating to switched-mode power supplies (SMPS) including flyback transformers. The matter ended in settlement.

Pictiva EX2054
Samsung v Pictiva
IPR2024-01094

2019 ***Case***: Omni MedSci Inc. versus Apple Inc.
Nature: Patent infringement.
Venue: US District Court, Eastern District of Texas, Marshall Division.
Case number: Civil Action No. 2:18-cv-134-RWS (E.D. Texas)
Law firm: Sidley Austin LLP, Washington DC.
Role: I served as technical expert witness on behalf of Apple Inc. (Defendant). I performed a non-infringement analysis relating to the heart rate monitor of the Apple Watch, authored an expert report, and testified at a deposition.

2019 ***Case***: Fluxwerx Illumination Inc., versus OKT Lighting USA LLC
Nature: Design patent infringement.
Venue: US District Court, Southern District of Texas, Houston Division.
Case number: Civil Action No. 4:19-CV-01113 (S.D. Texas)
Law firm: Burns & Levinson LLP, Boston MA.
Role: I served as technical expert witness on behalf of Fluxwerx Illumination, Inc. (Plaintiff). I performed an infringement analysis.

2020 ***Case***: Lighting Science Group Corporation versus Nichia Corporation and others
Nature: Patent infringement.
Venue: US ITC, Office for Unfair Import Investigations, Washington DC
Case number: Investigation No. 337-TA-1168
Law firm: Shearman & Sterling LLP, New York, NY.
Role: I served as technical expert witness on behalf of Nichia Corporation. I performed a non-infringement analysis, authored an expert report, was deposed, and testified at the ITC hearing as key technical witness on behalf of Nichia and Respondents (6 hours live testimony).

2020 ***Case***: Regents of the University of California versus Amazon, Walmart, Ikea, Target, and others
Nature: Patent infringement.
Venue: US ITC, Office for Unfair Import Investigations, Washington DC
Case number: Investigation No. 337-TA-1172
Law firm: Nixon Peabody LLP, Los Angeles CA.
Role: I served as technical expert witness on behalf of the Regents of the University of California. I performed an infringement analysis, authored an expert report, and was deposed.

2020 ***Case***: Samsung Electronics Company versus Acorn Technologies Company.
Nature: USPTO Inter Partes Review.
Venue: USPTO, Patent Trial and Appeal Board, Alexandria VA.
Case numbers: IPR-2020-01183 ('261), IPR-2020-01182 ('423), IPR-2020-01204 ('336), IPR-2020-01264 ('336), IPR-2020-01205 ('167), IPR-2020-01241 ('167), IPR-2020-01206 ('691), IPR-2020-01279 ('691), IPR-2020-01207 ('395), and IPR-2020-01282 ('395)
Law firm: Desmarais LLP, New York NY.
Role: I served as technical expert witness on behalf of Samsung Electronics Company. I authored several expert declarations and was deposed multiple times.

2020 ***Case***: Satco Company versus The Regents of the University of California.
Nature: USPTO Inter Partes Review.
Venue: USPTO, Patent Trial and Appeal Board, Alexandria VA.
Case number: IPR-2020-00579, IPR-2020-00695, IPR-2020-00780, and IPR-2020-00813.
Law firm: Nixon Peabody LLP, Los Angeles CA.
Role: I served as technical expert witness on behalf of The Regents of the University of California. I authored several expert declarations and was deposed.

Pictiva EX2054
Samsung v Pictiva
IPR2024-01094

2020 ***Case***: Godo Kaisha IP Bridge 1 Company versus Micron Technology Company.
Nature: Patent infringement.
Venue: US District Court for the Western District of Texas, Waco Division.
Case number: C.A. No. 6:20-cv-178-ADA.
Law firm: Orrick Herrington & Sutcliffe LLP, Menlo Park CA.
Role: I served as technical expert witness on behalf of Micron Technology Company. I authored multiple expert reports and was deposed.

2020 ***Case***: Nichia Company versus Healthe Company and Lighting Science Group Company.
Nature: Patent infringement.
Venue: US District Court for the Middle District of Florida, Orlando Division.
Case number: 6:19-cv-1332-RBD-EJK and 6:19-cv-1333-RBD-EJK.
Law firm: Rothwell, Figg, Ernst & Manbeck, PC, Washington DC.
Role: I served as technical expert witness on behalf of Nichia Company. I authored one or more expert reports.

2020 ***Case***: Semiconductor Energy Laboratory (SEL) Co., Ltd. versus BOE Technology Group Co., Ltd.
Nature: Patent infringement.
Venue: US District Court for the Northern District of California.
Case number: 3:20-cv-04297-EMC, N.D. Cal.
Law firm: Fish and Richardson, P.C., Redwood City CA.
Role: I served as technical expert witness on behalf of SEL.

2021 ***Case***: The University of California versus General Electric, Ikea, Home Depot and others
Nature: Patent infringement.
Venue: US ITC, Office for Unfair Import Investigations, Washington DC
Case number: Investigation No. 337-TA-1220
Law firm: Nixon Peabody LLP, Los Angeles CA.
Role: I served as technical expert witness on behalf of the University of California. I performed multiple analyses, authored several expert reports, was deposed multiple times, and testified at trial.

2021 ***Case***: Tianma Microelectronics Co., Ltd. versus Japan Display Inc. (JDI)
Nature: USPTO Inter Partes Review.
Venue: USPTO, Patent Trial and Appeal Board, Alexandria VA
Case numbers: IPR-2021-01029, IPR-2021-01057 and IPR-2021-01058
Law firm: Finnegan, Henderson, Farabow, Garrett & Dunner, LLP, Washington DC.
Role: I served as technical expert witness on behalf of Tianma. I performed multiple analyses and authored several declarations.

2021 ***Case***: Japan Display Inc. (JDI) versus Tianma Microelectronics Co., Ltd.
Nature: Patent infringement.
Venue: US District Court for the Eastern District of Texas, Marshall Division.
Case numbers: Civil Action No. 2:20-cv-00283-JRG; 2:20-cv-00284-JRG; and 2:20-cv-00285-JRG
Law firm: Finnegan, Henderson, Farabow, Garrett & Dunner, LLP, Washington DC.
Role: I served as technical expert witness on behalf of Tianma. I performed multiple analyses, authored several expert reports, and was deposed multiple times.

2022 ***Case***: Satco Products Inc. versus The Regents of the University of California.
Nature: USPTO Inter Partes Review.
Venue: USPTO, Patent Trial and Appeal Board, Alexandria VA.
Case number: IPR-2021-00662.
Law firm: Nixon Peabody LLP, Los Angeles CA.

Pictiva EX2054
Samsung v Pictiva
IPR2024-01094

Role: I served as technical expert witness on behalf of The Regents of the University of California, authored one expert declaration, and was deposed.

2022 ***Case***: Samsung Electronics Co. Ltd. versus Bishop Display Tech LLC.
Nature: USPTO Inter Partes Review.
Venue: USPTO, Patent Trial and Appeal Board, Alexandria VA.
Case numbers: IPR-2022-00500 and IPR-2022-00502.
Law firm: Baker Botts LLP, New York City NY.
Role: I served as technical expert witness on behalf of Samsung Electronics and have authored two expert declarations.

2022 ***Case***: Semiconductor Energy Laboratory (SEL) Co. Ltd. versus TCL China Star Optoelectronics Technology Co., Ltd.
Nature: Patent infringement.
Venue: US District Court for the Central District of California, Southern Division.
Case number: 8:21−cv−00554−JAK−ADS.
Law firm: Fish and Richardson, P.C., Redwood City CA.
Role: I served as technical expert witness on behalf of SEL, authored two expert reports, and was deposed.

2022 ***Case***: Nvidia Corporation versus Ocean Semiconductors LLC.
Nature: USPTO Inter Partes Review.
Venue: USPTO, Patent Trial and Appeal Board, Alexandria VA.
Case number: IPR2022-01288.
Law firm: Sheppard Mullin LLP, Menlo Park CA.
Role: I served as technical expert witness on behalf of Nvidia and authored one expert declaration.

2022 ***Case***: Nicor, Inc. versus SourceBlue LLC and InfiniLux Corporation.
Nature: Patent infringement.
Venue: US District Court for the Central District of California.
Case number: 2:21-cv-05876-AB(PDx) (C.D. Cal.).
Law firm: Loza & Loza IP LLP, Upland CA.
Role: I served as technical expert witness on behalf of Nicor, Inc., authored three expert reports, and was deposed.

2023 ***Case***: Dr. Shimon Maimon versus Lockheed Martin Corporation.
Nature: Dispute relating to a License Agreement.
Venue: JAMS ADR (Alternative Dispute Resolution).
Case number: JAMS Ref. No. 1460005932.
Law firm: Finnegan, Henderson, Farabow, Garrett & Dunner, LLP, Washington DC.
Role: I served as technical expert witness on behalf of Lockheed Martin Corporation, authored three expert reports, was deposed, and testified at the Hearing.

2023 ***Case***: Samsung Electronics Co. Ltd. versus Daedalus Prime LLC.
Nature: USPTO Inter Partes Review.
Venue: USPTO, Patent Trial and Appeal Board, Alexandria VA.
Case number: IPR2023-00536 and IPR2023-00653.
Law firm: Fish & Richardson PC, Minneapolis MN.
Role: I served as technical expert witness on behalf of Samsung Electronics and authored two expert declarations.

Pictiva EX2054
Samsung v Pictiva
IPR2024-01094

2023 ***Case***: Seoul Semiconductor Co. Ltd., et al. versus GE Healthcare Inc.
Nature: Patent infringement.
Venue: United States District Court for the District of Delaware.
Case number: Civil Action No. 1:22-cv-01455.
Law firm: Shearman & Sterling LLP, New York, NY.
Role: I served as technical expert witness on behalf of GE Healthcare.

2023 ***Case***: Efficient Power Conversion Corp. versus Innoscience (Zhuhai) Technology Company.
Nature: Patent infringement.
Venue: US International Trade Commission (ITC), Washington DC.
Case number: Investigation No. 337-TA-1366.
Law firm: Blank Rome LLP, Washington DC
Role: I served as technical expert witness on behalf of EPC, authored multiple expert reports, was deposed, and testified at the ITC Hearing.

2023 ***Case***: Xu Peicheng (Hong Kong) Optoelectronic Technol. Co. versus SemiSilicon Technol. Corp.
Nature: USPTO Inter Partes Review.
Venue: USPTO, Patent Trial and Appeal Board, Alexandria VA.
Case number: IPR2024-00156 (US Patent 8,124,988 and US 8,884,546)
Law firm: Rimon La PC, McLean VA.
Role: I served as technical expert witness on behalf of Xu Peicheng and authored two expert declarations.

2024 ***Case***: Seasonal Specialties, LLC versus LEDUP Manufacturing Group LTD.
Nature: Patent infringement.
Venue: US District Court, Central District of California, Western Division.
Case number: 2:23-cv-06318-SB-AS.
Law firm: Fairfield & Woods PC, Denver CO.
Role: I served as technical expert witness on behalf of LEDUP Manufacturing Group and composed multiple Invalidity Claim Charts.

2024 ***Case***: Wuxi Autowell Technology Co. Ltd. versus Teamtechnik Maschinen und Anlagen GmbH.
Nature: USPTO Inter Partes Review.
Venue: USPTO, Patent Trial and Appeal Board, Alexandria VA.
Case number: US patent numbers 8,247,681 and 8,253,009.
Law firm: Novick, Kim & Lee, PLLC, (NKL Law), Fairfax VA.
Role: I served as technical expert witness on behalf of Wuxi Autowell Technology and composed one expert declaration.

Pictiva EX2054
Samsung v Pictiva
IPR2024-01094

United States Patents

1. A. Fischer, Y. Horikoshi, K. Ploog, and E. F. Schubert "Semiconductor devices with at least one monoatomic layer of doping atoms" European Patent No. 0183 146 A2; US Patent No. 4,882,609; issued on November 15 (1985)
2. J. E. Cunningham, E. F. Schubert, and W. T. Tsang "Delta doped ohmic metal to semiconductor contacts" US Patent No. 4,772,934; issued on September 20 (1988)
3. J. E. Cunningham, E. F. Schubert, and W. T. Tsang "Field-effect transistor having a delta-doped ohmic contact" US Patent No. 4,780,748; issued on October 25 (1988)
4. J. E. Cunningham, E. F. Schubert, and W. T. Tsang "Method for fabricating a field-effect transistor with a self-aligned gate" US Patent No. 4,784,967; issued on November 15 (1988)
5. E. Fred Schubert "Optical communications modulator device" US Patent No. 4,929,064; filed on July 21 (1988) issued on May 29 (1990)
6. J. E. Cunningham, A. M. Glass, and E. F. Schubert "Devices having asymmetric delta-doping" US Patent No. 4,974,044; issued on November 27 (1990)
7. J. E. Cunningham, A. M. Glass, and E. F. Schubert "Devices having asymmetric delta-doping" US Patent No. 5,031,012; issued on July 9 (1991)
8. J. E. Cunningham, T. D. Harris, E. F. Schubert, and J. P. van der Ziel "Optical system including wavelength tunable semiconductor laser" US Patent No. 4,980,892; issued on December 25 (1990)
9. R. F. Kopf, J. M. Kuo, H. S. Luftman, and E. F. Schubert "Doping procedures for semiconductor devices" US Patent No. 5,024,967; issued on June 18 (1991)
10. D. G. Deppe, R. D. Dupuis, and E. F. Schubert "Vertical cavity semiconductor lasers" US Patent No. 5,018,157; issued on May 21 (1991)
11. D. G. Deppe, L. C. Feldman, R. F. Kopf, E. F. Schubert, L.-W. Tu, and G. J. Zydzik "Vertical cavity surface emitting lasers with electrically conducting mirrors" US Patent No. 5,068,868; issued on November 26 (1991)
12. D. G. Deppe, E. F. Schubert, L.-W. Tu, and G. D. Zydzik "Optical devices with electron-beam evaporated multilayer mirror" US Patent No. 5,206,871; issued on April 27 (1993)
13. R. F. Kopf, E. F. Schubert, H. O'Brian, L.-W. Tu, Y. H. Wang, and G. J. Zydzik "Vertical cavity surface emitting lasers with transparent electrodes" US Patent No. 5,115,441; issued on May 19 (1992)
14. E. F. Schubert, L.-W. Tu, and G. J. Zydzik "Elimination of heterojunction band discontinuities" US Patent No. 5,170,407; issued on December 8 (1992)
15. S. W. Downey, A. B. Emerson, R. F. Kopf, and E. F. Schubert "Devices having repetitive layers" US Patent No. 5,226,055; issued on July 6 (1993)
16. A. Y. Cho, E. F. Schubert, L.-W. Tu, and G. J. Zydzik "Resonant cavity light emitting diode" US Patent No. 5,226,053; issued on July 6 (1993)
17. L. C. Feldman, N. E. J. Hunt, D. C. Jacobson, J. M. Poate, E. F. Schubert, A. M. Vredenberg, Y. H. Wong, and G. J. Zydzik "Erbium-doped optical devices" US Patent No. 5,249,195; issued on September 28 (1993)

Pictiva EX2054
Samsung v Pictiva
IPR2024-01094

18. R. F. Kopf and E. F. Schubert "PN junction devices with group IV element-doped group III-V compound semiconductors" US Patent No. 5,268,582; issued on December 7 (1993)

19. N. E. J. Hunt and E. F. Schubert "Single mirror light-emitting diodes with enhanced intensity" US Patent No. 5,362,977; issued on November 8 (1994)

20. N. E. J. Hunt, E. F. Schubert, and G. J. Zydzik "Photodetector with a resonant cavity" US Patent No. 5,315,128; issued on May 24 (1994)

21. A. M. Glass, N. E. J. Hunt, J. M. Poate, E. F. Schubert, and G. J. Zydzik "Absorption resonant rare-earth-doped microcavities" US Patent No. 5,363,398; issued on November 8 (1994)

22. N. E. J. Hunt, M. Passlack, E. F. Schubert, and G. J. Zydzik "Electron beam deposition of gallium oxide thin films using a single high purity crystal source" US Patent No. 5,451,548; issued on September 19 (1995)

23. N. K. Dutta, R. J. Fischer, N. E. J. Hunt, M. Passlack, E. F. Schubert, and G. J. Zydzik "Gallium oxide coatings for optoelectronic devices using electron beam evaporation of a high purity single crystal $Gd_3Ga_5O_{12}$ source" US Patent No. 5,550,089; issued on August 27 (1996)

24. U. K. Chakrabarti, J. de Jong, E. F. Schubert, J. Wynn, and G. J. Zydzik "Mechanical fixture and procedure for in-vacuum coating of semiconductor laser facets" US Patent No. 5,719,077; issued on February 17 (1998)

25. E. F. Schubert "Enhanced p-type doping of wide-gap semiconductors" US Patent No. 5,932,899; issued on August 3 (1999)

26. J. D. Joannopoulos, S. Fan, P. R. Villeneuve, and E. F. Schubert "Light emitting device utilizing a periodic dielectric structure" US Patent No. 5,955,749; issued on September 21 (1999)

27. E. F. Schubert and D. A. Stocker "Crystallographic wet chemical etching on GaN" US Patent No. 6,294,475; issued on September 25 (2001)

28. E. F. Schubert "Light-emitting diode with omni-directional reflector" US Patent No. 6,784,462; issued on August 31 (2004)

29. Jaehee Cho, Hong Luo, Jong Kyu Kim, Yong Jo Park, Cheolsoo Sone, and E. Fred Schubert "Light emitting device having protection element and method of manufacturing the light emitting device" US Patent No. 7,411,221 B2; issued on August 12 (2008)

30. Jaehee Cho, Frank Wilhelm Mont, Cheolsoo Sone, Jong-kyu Kim, June-o Song, E. Fred Schubert "Optical thin film, semiconductor light emitting device having the same and methods of fabricating the same" US Patent No. 7,483,212; issued on January 27 (2009)

31. Jaehee Cho, Martin F. Schubert, E. Fred Schubert, Jong Kyu Kim, Cheolsoo Sone "Light emitting diodes and display apparatuses using the same" US Patent No. 7,560,746; issued on July 14 (2009)

32. Martin F. Schubert, Sameer Chhajed, Jong Kyu Kim, E. Fred Schubert, and Jaehee Cho "Reflector shapes for light-emitting diode-polarized light sources" US Patent No. 7,766,495; filed on June 24 (2008); issued on August 3 (2010)

33. Martin F. Schubert, Ahmed Noemaun, Sameer Chhajed, Jong Kyu Kim, E. F. Schubert, Cheolsoo Sone "Encapsulant shapes for light emitting devices lacking rotational symmetry designed to enhance extraction of light with a particular linear polarization" US Patent No. 7,819,557; filed on June 24 (2008); issued on October 6 (2010)

Pictiva EX2054
Samsung v Pictiva
IPR2024-01094

34. Jaehee Cho, Jong-Kyu Kim, Cheolsoo Sone, and E. F. Schubert "LED device having diffuse reflective surface" US Patent No. 7,816,855; filed on December 28 (2005); issued on October 19 (2010)

35. Jaehee Cho, E. Fred Schubert, and Xing Yan "Liquid crystal display with refractive index matched electrodes" US Patent No. 8,164,727; filed on April 28, 2010; issued on April 24 (2012)

36. Mary H. Crawford, Daniel Koleske, Jaehee Cho, Di Zhu, Ahmed Noemaun, Martin F. Schubert, and E. Fred Schubert "High efficiency III-Nitride light-emitting diodes" US Patent No. 8,451,877; filed on March 17, 2011; issued on May 28 (2013)

37. Min-ho Kim, Martin F. Schubert, Jong Kyu Kim, E. Fred Schubert, Yongjo Park, Cheolsoo Sone, and Sukho Yoon "Nitride semiconductor light-emitting device" US Patent No. 8,502,266; filed on September 8 (2010); issued on August 6 (2013)

38. David J. Poxson, Frank W. Mont, E. Fred Schubert, and Richard W. Siegel "Tunable nanoporous film on polymer substrates, and method for their manufacture" US Patent No. 9,732,427; filed on April 23 (2013); issued on August 15 (2017)

39. Sameer Chhajed, Jong Kyu Kim, Shawn-Yu Lin, Mei-Ling Kuo, Frank W Mont, David J Poxson, E Fred Schubert, Martin F Schubert "Ultra-low reflectance broadband omni-directional anti-reflection coating" US Patent No. 11,088,291; filed on July 22 (2016); issued on August 10 (2021)

Patent Licensing: Several patents listed above have been licensed to companies, including the Luminus Devices Company, Samsung Company, Epistar Company, Cree Company, Osram Company, and Lumileds Company.

Pictiva EX2054
Samsung v Pictiva
IPR2024-01094

Journal Publications

1982

1. H. Künzel, H. Jung, E. F. Schubert, and K. Ploog "Influence of growth conditions and of alloy composition on electrical and optical properties of MBE AlGaAs" *Journal Physique Colloque C5*, **C5/175**, 42 (1982)

1984

2. E. F. Schubert, K. Ploog, H. Dämbkes, and K. Heime "Selectively doped n-AlGaAs/ GaAs heterostructures with high-mobility two-dimensional electron gas for field-effect transistors. Part I: Effect of parallel conductance" *Applied Physics* **A33**, 63 (1984)
3. E. F. Schubert, K. Ploog, H Dämbkes., and K. Heime "Selectively doped n-AlGaAs/ GaAs heterostructures with high-mobility two-dimensional electron gas for field-effect transistors. Part II: Hot electron effects" *Applied Physics* **A33**, 183 (1984)
4. E. F. Schubert and K. Ploog "Transient photoconductivity in selectively doped n-type AlGaAs/GaAs heterostructures" *Physical Review* **B29**, 4562 (1984)
5. E. F. Schubert, E. O. Göbel, Y. Horikoshi, K. Ploog, and H. J. Queisser "Alloy broadening in photoluminescence spectra of AlGaAs" *Physical Review* **B30**, 813 (1984)
6. E. F. Schubert and K. Ploog "Shallow and deep donors in direct-gap n-AlGaAs:Si grown by molecular-beam epitaxy" *Physical Review* **B30**, 7021 (1984)

1985

7. E. F. Schubert, J. Knecht, and K. Ploog "Transient and persistent photoconductivity in n-AlGaAs and selectively doped n-AlGaAs/GaAs heterostructures*" Journal of Physics C: Solid-State Physics* **18**, L215 (1985)
8. E. F. Schubert, A. Fischer, and K. Ploog "GaAs sawtooth superlattice light-emitting diode operating monochromatically at λ > 0.9 μm" *Electronics Letters* **21**, 411 (1985)
9. E. F. Schubert, A. Fischer, Y. Horikoshi, and K. Ploog "GaAs sawtooth superlattice laser emitting at wavelengths λ > 0.9 μm" *Applied Physics Letters* **47**, 219 (1985)
10. E. F. Schubert, A. Fischer, and K. Ploog "Electron-impurity tunneling in selectively doped n-type AlGaAs/GaAs heterostructures" *Physical Review* **B31**, 7937 (1985)
11. E. F. Schubert, Y. Horikoshi, and K. Ploog "Radiative electron-hole recombination in a new sawtooth semiconductor superlattice grown by molecular-beam epitaxy" *Physical Review* **B32**, 1085 (1985)
12. E. F. Schubert and K. Ploog "The delta-doped field-effect transistor" *Japanese Journal Applied Physics Letters* **24**, L608 (1985)
13. K. Ploog, A. Fischer, E. F. Schubert "Preparation and properties of a new GaAs sawtooth doping superlattice" *Proceedings of the Second International Conference (Yamada Conference) on Modulated Semiconductor Structures*; September 9-13 (1985), Kyoto, Japan
14. E. F. Schubert and K. Ploog "Electron subband structure in selectively doped n-AlGaAs/ GaAs heterostructures*" IEEE Transactions on Electron Devices*, **ED-32**, 1868 (1985)
15. E. F. Schubert and K. Ploog "Optical properties of a new sawtooth superlattice grown by molecular beam epitaxy" *Journal de Physique* (Paris), **46**, 147 (1985)

1986

16. E. F. Schubert, A. Fischer, and K. Ploog "The delta-doped field-effect transistor" *IEEE Transactions on Electron Devices,* **ED-33**, 625 (1986)
17. E. F. Schubert and K. Ploog "Interpretation of capacitance-voltage profiles from delta-doped GaAs grown by molecular-beam epitaxy" *Japanese Journal of Applied Physics* **25**, 966 (1986)
18. E. F. Schubert and W. T. Tsang "Photoluminescence line shape of excitons in alloy semiconductors" *Physical Review B, Rapid Communications*, **B34**, 2991 (1986)
19. E. F. Schubert, J. E. Cunningham, W. T. Tsang, and T. H. Chiu "Delta-doped ohmic contacts to n-GaAs" *Applied Physics Letters* **49**, 292 (1986) and *Applied Physics Letters* **49**, 984 (1986)
20. K. Ploog, A. Fischer, and E. F. Schubert "Preparation and properties of a new GaAs sawtooth doping superlattice" *Surface Science* **174**, 120 (1986)
21. B. I. Miller, E. F. Schubert, U. Koren, A. Ourmazd, A. H. Dayem, and R. J. Capik "High quality narrow GaInAs/InP quantum wells grown by atmospheric organometallic vapor phase epitaxy" *Applied Physics Letters* **49**, 1384 (1986)
22. E. F. Schubert, Cunningham J. E., and Tsang W. T. "Self-aligned enhancement and depletion-mode GaAs field-effect transistors employing the delta-doping technique" *Applied Physics Letters* **49**, 1729 (1986)

Pictiva EX2054
Samsung v Pictiva
IPR2024-01094

23. W. T. Tsang, E. F. Schubert, A. H. Dayem, J. E. Cunningham, T. H. Chiu, J. A. Ditzenberger, J. Shah, and J. L. Zyskind "Very high quality GaInAs grown by chemical beam epitaxy" *Journal of Electronic Materials* **15**, 307 (1986)
24. W. T. Tsang and E. F. Schubert "Extremely high quality GaInAs/InP quantum wells grown by chemical beam epitaxy" *Applied Physics Letters* **49**, 220 (1986)
25. W. T. Tsang, A. H. Dayem, T. H. Chiu, J. E. Cunningham, E. F. Schubert, J. A. Ditzenberger, J. Shah, J. L. Zyskind, and N. Tabatabaie "Chemical beam epitaxial growth of extremely high quality GaInAs on InP" *Applied Physics Letters* **49**, 170 (1986)
26. E. F. Schubert, A. Fischer, and K. Ploog "Photoconductivity in selectively n- and p-doped AlGaAs/GaAs heterostructures" *Solid-State Electronics 29*, 173 (1986)

1987

27. E. F. Schubert, J. E. Cunningham, and W. T. Tsang "'Type A' sawtooth doping superlattice: realization of the Esaki-Tsu type superlattice" *Physical Review B Rapid Communications* **B36**, 1348 (1987)
28. E. F. Schubert, J. E. Cunningham, and W. T. Tsang "Electron-mobility enhancement and electron-concentration enhancement in delta-doped n-GaAs at T = 300 K" *Solid-State Communications* **63**, 591 (1987)
29. W. T. Tsang, E. F. Schubert, T. H. Chiu, J. E. Cunningham, E. G. Burkhardt, J. A. Ditzenberger, and E. Agyekum "Growth of high-quality GaInAsP by chemical beam epitaxy" *Applied Physics Letters* **51**, 761 (1987)
30. J. E. Cunningham, W. T. Tsang, T. H. Chiu, E. F. Schubert, and J. A. Ditzenberger "MBE grown high purity GaAlAs" *J. Vac. Sci. Technol*. **A5**, 761 (1987)
31. W. T. Tsang, E. F. Schubert, T. H. Chiu, J. E. Cunningham, and J. A. Ditzenberger "Chemical beam epitaxial growth of very high quality GaInAs and GaInAs/InP quantum well heterostructures" *GaAs and Related Compounds* (1987) Ed. by W. T. Lindley.
32. J. E. Cunningham, W. T. Tsang, T. H. Chiu, and E. F. Schubert "Molecular beam epitaxial growth of high purity AlGaAs" *Applied Physics Letters* **50**, 769 (1987)
33. Y. Horikoshi, A. Fischer, E. F. Schubert, and K. Ploog "High-mobility two-dimensional electron gas from delta-doped asymmetric AlGaAs/GaAs/AlGaAs quantum wells" *Japanese Journal Applied Physics* **26**, 263 (1987)
34. T. H. Chiu, E. Agyekum, J. A. Ditzenberger, A. Robertson, E. F. Schubert, W. T. Tsang, and C. W. Tu "Growth and characterization of (001) GaAs epilayers by chemical beam epitaxy" *Journal of Electronic Materials* **16**, A21 (1987)
35. E. F. Schubert, J. E. Cunningham, and W. T. Tsang "Perpendicular electronic transport in doping superlattices" *Applied Physics Letters* **51**, 817 (1987)
36. E. F. Schubert, J. E. Cunningham, W. T. Tsang, and G. L. Timp "Selectively delta-doped AlGaAs/GaAs heterostructures with two-dimensional electron-gas concentrations $n_{2DEG} \geq 1.5 \times 10^{12}$ cm^{-2} for field-effect transistors" *Applied Physics Letters* **51**, 1170 (1987)
37. T. H. Chiu, W. T. Tsang, E. F. Schubert, and E. Agyekum "Chemical beam epitaxial growth of high-purity GaAs using trimethylgallium and arsine" *Applied Physics Letters* **51**, 1109 (1987)

1988

38. B. Ullrich, E. F. Schubert, J. Stark, and J. E. Cunningham "Localization of impurities in delta-doped n-type GaAs" *Applied Physics* **A47**, 123 (1988)
39. E. F. Schubert, J. Stark, T. H. Chiu, and B. Tell "Diffusion of atomic silicon in gallium arsenide" *Applied Physics Letters* **53**, 293 (1988)
40. E. F. Schubert, J. Stark, B. Ullrich, and J. E. Cunningham "Spatial localization of impurities in delta-doped GaAs" *Applied Physics Letters* **52**, 1508 (1988)
41. J. E. Cunningham, G. Timp, E. F. Schubert, W. T. Tsang, P. G. N. DeVegvar, T. H. Chiu, and E. Agyekum "Enhancements in two-dimensional electron gas density and mobility in delta-doped AlGaAs heterostructures" *Proceedings Materials Research Society Symposium* **102** (1988)
42. T. H. Chiu, E. F. Schubert, J. E. Cunningham, and B. Tell "Diffusion studies of the Si delta-doped GaAs by capacitance-voltage measurements" *Journal of Applied Physics, Rapid Communication* **64**, 1578 (1988)
43. T. Y. Kuo, J. E. Cunningham, E. F. Schubert, W. T. Tsang, T. H. Chiu, F. Ren, and C. G. Fonstad "Selectively delta-doped quantum well transistor grown by gas source molecular beam epitaxy" *Journal of Applied Physics* **64**, 3324 (1988)
44. E. F. Schubert, B. Ullrich, T. D. Harris, and J. E. Cunningham "Quantum-confined interband absorption in GaAs sawtooth doping superlattices" *Physical Review* **B38**, 8305 (1988)

Pictiva EX2054
Samsung v Pictiva
IPR2024-01094

45. T. H. Chiu, E. F. Schubert, J. E. Cunningham, W. T. Tsang, and B. Tell "Chemical beam epitaxial growth and capacitance-voltage characterization of Si-doped GaAs" *Proceedings Materials Research Society Symposium* **102**, 475 (1988)
46. E. F. Schubert and J. E. Cunningham "Photonic switching by tunneling-assisted absorption modulation in a GaAs sawtooth structure" *Electronics Letters* **24**, 980 (1988)
47. E. F. Schubert, T. H. Chiu, J. E. Cunningham, B. Tell, and J. B. Stark "Spatial localization and diffusion of atomic silicon in delta-doped GaAs" *Journal of Electronics Materials*, **17**, 527 (1988)
48. R. J. Malik, R. Nottenburg, E. F. Schubert, J. F. Walker, and R. W. Ryan "Carbon doping in molecular beam epitaxy of GaAs from a heated graphite filament" *Applied Physics Letters* **53**, 2661 (1988)
49. E. F. Schubert, T. D. Harris, and J. E. Cunningham "Minimization of dopant-induced random potential fluctuations in sawtooth doping superlattices" *Applied Physics Letters* **53**, 2208 (1988)
50. T. Y. Kuo, J. E. Cunningham, E. F. Schubert, W. T. Tsang, T. H. Chiu, and C. G. Fonstad "Experimental and theoretical characterization of the delta-doped quantum well transistor grown by gas source molecular beam epitaxy" *IEEE Transactions on Electron Devices* **35**, 2449 (1988).

1989

51. E. F. Schubert, J. E. Cunningham, T. H. Chiu, J. B. Stark, B. Tell, and C. W. Tu "Spatial localization and diffusion of Si in delta-doped GaAs and AlGaAs and its application to electron-mobility optimization in selectively doped heterostructures" *GaAs and Related Compounds* Ed. J. S. Harris. (1989)
52. E. F. Schubert, T. D. Harris, J. E. Cunningham, and W. Jan "Multi-subband photoluminescence in sawtooth doping superlattices" *Physical Review* **B39**, 11011 (1989)
53. J. E. Cunningham, G. Timp, A. M. Chang, T. H. Chiu, W. Jan, E. F. Schubert, and W. T. Tsang "Spatial localization of Si in selectively delta-doped AlGaAs/GaAs heterostructures for high mobility and density realization" *Journal Crystal Growth* **95**, 253 (1989)
54. B. Ullrich, C. Zhang, E. F. Schubert, J. E Cunningham., and K. von Klitzing "Transmission spectroscopy on sawtooth doping superlattices" *Physical Review* **B39**, 3776 (1989)
55. E. F. Schubert, J. E. Cunningham, T. H. Chiu, J. B. Stark, B. Tell, and C.W Tu. "Spatial localization and diffusion of Si in delta-doped GaAs and AlGaAs and its application to electron-mobility optimization in selectively doped heterostructures" *GaAs and Related Compounds 1988* (Institute Physics Conference Series **96**, Bristol, 1989) p. 33
56. A. M Glass., E. F. Schubert, B. A. Wilson, C. E. Bonner, J. E. Cunningham, D. H. Olson, and W. Jan "A novel photo-voltaic delta-doped GaAs superlattice structure" *Applied Physics Letters* **54**, 2247 (1989)
57. E. F. Schubert, L. Pfeiffer, K. W. West, and A. Izabelle "Dopant distribution for maximum carrier-mobility in selectively doped $Al_{0.30}Ga_{0.70}As$/GaAs heterostructures" *Applied Physics Letters* **54**, 1350 (1989)
58. J. E. Cunningham, G. Timp, T. Chiu, W. T Tsang., E. F. Schubert, and W. Jan "Mobility and density enhancement in delta-doped $Al_{0.30}Ga_{0.70}As$/GaAs heterostructures" *GaAs and Related Compounds 1988* (Institute Physics Conference Series, **96**, Bristol, 1989) p. 33
59. E. F. Schubert, C. W. Tu, R. Kopf, J. M. Kuo and L. M. Lunardi "Diffusion and drift of Si-dopants in delta-doped n-type AlGaAs" *Applied Physics Letters* **54**, 2592 (1989)
60. E. F. Schubert, J. P. van der Ziel, J. E. Cunningham, and T. D. Harris "Tunable stimulated emission of radiation in GaAs doping superlattices" *Applied Physics Letters* **55**, 757 (1989)
61. E. F. Schubert, T. D. Harris, and J. E. Cunningham "Quantum-confined optical interband transitions in delta-doped doping superlattices" *Proceedings of Mats. Research Society* Editors: C. W. Tu and A. C. Gossard **145**, 21 (1989)
62. D. G. Deppe, A. Y. Cho, K. F. Huang, R. J. Fischer, K. Tai, E. F Schubert, and Y. K. Chen "AlGaAs-GaAs and AlGaAs-GaAs-InGaAs vertical cavity surface emitting lasers with Ag mirrors" *Journal of Applied Physics* **66**, 5629 (1989)
63. W. S. Hobson, Pearton S., Schubert E. F., and Cabaniss G. "Zinc delta-doping of GaAs by organometallic vapor phase epitaxy" *Applied Physics Letters* **55**, 1546 (1989)

1990

64. (**Invited**) E. F. Schubert, J. M. Kuo, and R. F. Kopf "Theory and experiment of capacitance-voltage profiling on semiconductors with quantum confinement" *Journal Electronic Materials, Special Issue on "Artificially Structured Materials"* **19**, 521 (1990)
65. (**Invited**) E. F. Schubert "Delta-doping of III-V compound semiconductors: Fundamentals and device applications" *Journal of Vacuum Science and Techno*logy, **A8**, 2980 (1990)
66. (**Invited**) E. F. Schubert "Optical properties of delta-doped doping superlattices" *Surface Science*, **228**, 240 (1990)

Pictiva EX2054
Samsung v Pictiva
IPR2024-01094

67. E. F. Schubert, J. M. Kuo, R. F. Kopf, H. S. Luftman, L. C. Hopkins, and N. J. Sauer, "Beryllium delta-doping of GaAs grown by molecular beam epitaxy" *Journal of Applied Physics* **67**, 1969 (1990)
68. D. G. Deppe, N. D. Gerrard, C. J. Pinzone, R. D. Dupuis, and E. F. Schubert "Quarter-wave Bragg reflector stack of InP/$In_{0.53}Ga_{0.47}As$ for 1.65 μm wavelength" *Applied Physics Letters* **56**, 315 (1990)
69. E. F. Schubert, J. M. Kuo, R. F. Kopf, A. S. Jordan, H. S. Luftman, and L. C. Hopkins "Fermi-level-pinning induced dopant redistribution in semiconductors during growth by molecular beam epitaxy" *Physical Review* **42**, 1364 (1990)
70. E. F. Schubert, R. F. Kopf, J. M. Kuo, H. S. Luftman, and P. A. Garbinski "Spatial resolution of the capacitance-voltage profiling technique on semiconductors with quantum confinement" *Applied Physics Letters* **57**, 497 (1990)
71. (**Invited**) E. F. Schubert "Optical and electronic properties of delta-doped doping superlattices" *Journal of Optical and Quantum Electronics*, **22**, S141 (1990)
72. E. F. Schubert, L.-W. Tu, R. F. Kopf, G. J. Zydzik, and D. G. Deppe "Low threshold vertical cavity surface emitting lasers with metallic reflectors" *Applied Physics Letters*, **57**, 117 (1990)
73. E. F. Schubert, F. Capasso, A. L. Hutchinson, S. Sen, and A. C. Gossard "Observation of charge storage and intra-subband relaxation in resonant tunneling via a high sensitivity capacitance technique" *Applied Physics Letters*, **57**, 2820 (1990)
74. H.-J. Gossmann, E. F. Schubert, D. J. Eaglesham, and M. Cerullo "Low temperature Si molecular beam epitaxy: Solution to the doping problem" *Applied Physics Letters*, **57**, 2440 (1990)
75. S. W. Downey, R. F. Kopf, E. F. Schubert, and J. M. Kuo "Resonance ionization mass spectrometry of AlGaAs: Resolution, sensitivity, and matrix effect" *Applied Optics*, **29**, 4938 (1990)
76. L.-W. Tu, E. F. Schubert, R. F Kopf., G. J., Zydzik M. Hong, S. N. G. Chu, and J. P. Mannaerts "Vertical cavity surface emitting lasers with semitransparent metallic mirrors and high quantum efficiencies" *Applied Physics Letters*, **57**, 2045 (1990)
77. E. F. Schubert, H. S. Luftman, R. F. Kopf, R. L Headrick., and J. M. Kuo "Secondary ion mass spectroscopy on delta-doped GaAs grown by molecular beam epitaxy" *Applied Physics Letters*, **57**, 1799 (1990)
78. H.-J. Gossmann, E. F. Schubert, D. J. Eaglesham, and M. Cerullo "Si molecular beam epitaxy at room temperature: Solution to the Si doping problem" *Proceedings of the International Conference on Electronic Materials*, 11541-9008-48TM

1991

79. (**Invited**) E. F. Schubert and R. F. Kopf "Delta-doping in III-V semiconductors" *Materials Science Forum*, 65 & 66, 53 (Trans Tech Publications, Zürich, 1991)
80. L.-W. Tu, Y. H. Wang, E. F. Schubert, B. E. Weir, G. J. Zydzik, and A. Y. Cho "High temperature performance of three-quantum-well vertical-cavity top-emitting lasers" *Electronics Letters* **27**, 457 (1991)
81. L.-W. Tu, E. F. Schubert, H. M. O'Brian, Y.-H. Wang, B. E Weir., G. J. Zydzik, and A. Y. Cho "Transparent conductive metal-oxide contacts in vertical-injection top-emitting quantum well lasers" *Applied Physics Letters* **58**, 790 (1991)
82. L. Pfeiffer, E. F. Schubert, K. W. West, and C. W. Magee "Si dopant migration and the AlGaAs/GaAs inverted interface" *Applied Physics Letters* **58**, 2258 (1991)
83. E. F. Schubert "Doping distributions in III-V semiconductors" *Advanced Processing and Characterization Technologies, American Vacuum Society Series* **10**, 5 (American Institute of Physics, New York, 1991)
84. R. F. Kopf, E. F Schubert, T. D Harris., and R. S. Becker "Photoluminescence of GaAs quantum wells grown by molecular-beam epitaxy with growth interruptions" *Applied Physics Letters* **58**, 631 (1991)

1992

85. W. T. Tsang, E. F. Schubert, and J. E. Cunningham "Doping in semiconductors with variable activation energy: A new concept and demonstration" *Applied Physics Letters* **60**, 115 (1992)
86. E. F. Schubert "Smart doping of III-V semiconductor heterostructure devices" *Proceedings 180th Electrochem. Society Mtg., State-of-the-Art Program on Compound Semiconductors* **92-19**, 85 (1992)
87. E. F. Schubert, L.-W. Tu, G. J. Zydzik, R. F. Kopf, A. Benvenuti, and M. R. Pinto "Elimination of heterojunction band discontinuities by modulation doping" *Applied Physics Letters* **60**, 466 (1992)
88. E. F. Schubert, Y.-H. Wang, A. Y. Cho, L. W. Tu, and G. J. Zydzik "Resonant cavity light emitting diode" *Applied Physics Letters* **60**, 921 (1992)
89. R. F. Kopf, E. F. Schubert, S. W. Downey, and A. B. Emerson "P- and n-type dopant profiles in distributed Bragg reflector structures and their effect on resistance" *Applied Physics Letters* **61**, 1820 (1992)

Pictiva EX2054
Samsung v Pictiva
IPR2024-01094

90. E. F. Schubert, A. M. Vredenberg, N. E. J. Hunt, Y. H. Wong, P. C. Becker, J. M Poate., D. C. Jacobson, L. C. Feldman, and G. J. Zydzik "Giant enhancement of luminescence intensity in Er-doped Si/SiO_2 resonant cavities" *Applied Physics Letters* **61**, 1381 (1992)
91. N. E. J. Hunt, E. F. Schubert, R. A Logan., and G. J. Zydzik "Enhanced spectral power density and reduced linewidth at 1.3 μm in an InGaAsP quantum-well resonant-cavity light-emitting diode" *Applied Physics Letters* **61**, 2287 (1992)
92. R. F. Kopf, E. F. Schubert, S. W. Downey, and A. B. Emerson "Resonance ionization of device materials" *Institute of Physics Conference Series* **128**, 255 (1992)
93. N. E. J. Hunt, E. F. Schubert, D. L. Sivco, A. Y. Cho, and G. J. Zydzik "Power and efficiency limits in single mirror light emitting diodes with enhanced intensity" *Electronics Letters* **28**, 2169 (1992)
94. N. E. J. Hunt, E. F. Schubert, R. A. Logan, and G. J. Zydzik "Extremely narrow spectral widths from resonant cavity light-emitting diodes (RCLEDs) suitable for wavelength-division multiplexing at 1.3 μm and 1.55 μm" *Proceedings of the International Electron Devices Meeting (IEDM)* **1992**, 651 (1992)
95. A. M. Vredenberg, N. E. J. Hunt, E. F. Schubert, P. C. Becker, D. C. Jacobson, J. M. Poate, and G. J. Zydzik "Erbium implantation in optical microcavities for controlled spontaneous emission" *Proceedings Ion Implantation Technology - 92*

1993

96. (**Book**) E. F. Schubert "Doping in III-V semiconductors" *Cambridge University Press*, ISBN 0-521-41919-0, 606 pages (1993)
97. E. F. Schubert and R. F. Kopf "Selective n- and p-type C-doping in $Ga_{0.47}In_{0.53}As$ superlattices" *Journal Crystal Growth*. **127**, 1037 (1993)
98. H. Yao, E. F. Schubert, and R. F. Kopf "Raman and ellipsometric studies of delta-doped GaAs" *Materials Research Society Symposium Proceedings* **261**, 57 (1993)
99. (**Invited**) H.-J. Gossmann and E. F. Schubert "Delta doping in silicon" *CRC Critical Reviews in Solid-State and Materials Sciences* **18**, 1 (1993)
100. A. M. Vredenberg, N. E. J. Hunt, E. F. Schubert, D. C. Jacobson, J. M. Poate, and G. J. Zydzik "Controlled atomic spontaneous emission from Er^{3+} in a transparent Si/SiO_2 microcavity" *Physical Review Letters* **71**, 517 (1993)
101. (**Invited**) E. F. Schubert, R. F. Kopf, and T. D. Harris "Interface configurations of AlGaAs /GaAs quantum wells probed by photoluminescence spectroscopy" *Materials Research Society Symposium Proceedings* **280**, 203 (1993)
102. R. F. Kopf, E. F. Schubert, T. D. Harris, R. S. Becker, and G. H. Gilmer "Modification of GaAs/AlGaAs growth-interrupted interfaces through changes in ambient conditions during growth" *Journal of Applied Physics* **74**, 6139 (1993)
103. N. E. J. Hunt, E. F. Schubert, and G. J. Zydzik "A resonant-cavity p-i-n photodetector utilizing an electron-beam evaporated Si/SiO_2 microcavity" *Applied Physics Letters* **63**, 391 (1993)
104. N. E. J. Hunt, E. F. Schubert, R. F. Kopf, D. L. Sivco, A. Y. Cho, and G. J. Zydzik "Increased fiber communications bandwidth from a resonant cavity light emitting diode emitting at λ = 940 nm" *Applied Physics Letters* **63**, 2600 (1993)
105. E. F. Schubert, N. E. J. Hunt, A. M. Vredenberg, T. D. Harris, J. M. Poate, D. C Jacobson., Y. H Wong., and G. J. Zydzik "Enhanced luminescence by resonant absorption in Er-doped Si/SiO_2 microcavities" *Applied Physics Letters* **63**, 2603 (1993)

1994

106. E. F. Schubert, N. E. J. Hunt, M. Micovic, R. J. Malik, D. L. Sivco, A. Y. Cho, and G. J. Zydzik "Highly efficient light-emitting diodes with microcavities" *Science* **265**, 943 (1994)
107. (**Invited**) E. F. Schubert "Delta-doping of semiconductors: electronic, optical, and structural properties of materials and devices" in *Artificially Structured Semiconductors*, Vol. **40**, Ed. by Gossard A. C. in Semiconductors and Semimetals, Editors: Willardson R. K., Beer A. C., and Weber E. R. (1994)
108. (**Invited**) E. F. Schubert, N. E. J. Hunt, D. L. Sivco, and A. Y. Cho "Resonant-cavity light-emitting devices" *Brazilian Journal of Physics*. **24**, 445 (1994)
109. E. F. Schubert, M. Passlack, M. Hong, J. Mannaerts, R. L. Opila, L. N. Pfeiffer, K. W. West, C. G. Bethea, and G. J. Zydzik, "Properties of Al_2O_3 optical coatings on GaAs produced by oxidation of epitaxial AlAs/GaAs films" *Applied Physics Letters* **64**, 2976 (1994)
110. E. F. Schubert, L. Pfeiffer, K. W. West, H. S. Luftman, and G. J. Zydzik "Si delta-doping of ⟨011⟩ oriented GaAs and AlGaAs grown by molecular beam epitaxy" *Applied Physics Letters* **64**, 2238 (1994)

Pictiva EX2054
Samsung v Pictiva
IPR2024-01094

111. M. Passlack, N. E. J. Hunt, E. F. Schubert, G. J. Zydzik, M. Hong, J. P. Mannaerts, R. L. Opila, and R. J. Fischer "Dielectric properties of electron-beam deposited Ga_2O_3 films" *Applied Physics Letters* **64**, 2715 (1994)
112. E. F. Schubert, L. Pfeiffer, K. W. West, H. S. Luftman, and G. J. Zydzik "Si delta-doping of 〈011〉-oriented GaAs and AlGaAs grown by molecular-beam epitaxy" *Applied Physics Letters* **64**, 2238 (1994)
113. E. F. Schubert "Doping in III-V semiconductors" *Materials Research Society Proceedings* (1994/1995) Ed. Tu C. W.
114. E. F. Schubert, S. W. Downey, C. Pinzone, and A. B. Emerson "Evidence of very strong inter-epitaxial-layer diffusion in Zn doped GaInPAs/InP structures" *Applied Phys A* June (1995)
115. E. F. Schubert and N. E. J. Hunt "Highly efficient light-emitting diodes with microcavities" *Proceedings of the International Symposium on Compound Semiconductors* (1994/1995)

1995

116. (**Invited**) N. E. J. Hunt, E. F. Schubert, D. L. Sivco, A. Y. Cho, R. F., Kopf Logan R. A., and Zydzik G. J. "High efficiency, narrow spectrum resonant cavity light-emitting diodes" in *Confined Electrons and Photons* Editors: Burstein E. and Weisbuch C. (Plenum Press, New York, 1995)
117. (**Invited**) N. E. J. Hunt, A. M. Vredenberg, E. F. Schubert, P. C. Becker, D. C. Jacobson, J. M. Poate, and G. J. Zydzik "Spontaneous emission control of Er^{3+} in Si/SiO_2 micro-cavities" in *Confined Electrons and Photons*; Editors: E. Burstein and C. Weisbuch (Plenum Press, New York, 1995)
118. M. Passlack, M. Hong, E. F. Schubert, J. R. Kwo, J. P. Mannerts, S. N. G. Chu, N. Moriya, and F. A. Thiel "In situ fabricated Ga_2O_3-GaAs structures with low interface recombination velocity" *Applied Physics Letters* **66**, 625 (1995)
119. E. F. Schubert and N. E. J. Hunt, Ed. H. Goronkin, and U. Mishra "Highly efficient light-emitting diodes with microcavities" *Compound Semiconductors 1994*. Proceedings of the Twenty-First International Symposium, p. xxvii+912, 489 (1995)
120. M. Passlack, M. Hong, E. F. Schubert, J. R. Kwo, J. P. Mannerts, W. S. Hobson, N. Moriya, J. Lopata, and G. J. Zydzik "Ga_2O_3 films for insulator/III-V semiconductor interfaces" *Institute Physics Conference Series No*. **141**: Chapter 5, 597 (1995)
121. M. Passlack, M. Hong, E. F. Schubert, J. P. Mannaerts, W. S. Hobson, N. Moriya, J. Lopata, and G. J. Zydzik, H. Ed. Goronkin and U. Mishra "Ga_2O_3 films for insulator/III-V semiconductor interfaces" *Compound Semiconductors 1994*. Proceedings of the Twenty-First International Symposium, p. xxvii+912, 597 (1995)
122. L.-W. Tu, E. F. Schubert, Y. H. Wang, B. E. Weir, G. J. Zydzik, and A. Y. Cho "Superior output linearity of optimized double heterostructure vertical-cavity top-emitting lasers" *Applied Physics Letters* **66**, 2315 (1995)
123. E. F. Schubert and J. M. Poate "Er-doped Si/SiO_2 microcavities" *Proceedings of the SPIE- The International Society for Optical Engineering* (USA), Vol. **2397**, p. 495 (1995)
124. M. Passlack, C. G. Bethea, W. S. Hobson, J. Lopata, E. F. Schubert, G. J. Zydzik, D. T. Nichols, J. F. de Jong, U. K. Chakrabarti, and N. K. Dutta "Infrared microscopy studies on high-power InGaAs-GaAs-InGaP lasers with Ga_2O_3 facet coatings" *IEEE Journal on Selected Topics Quantum Electronics* **1**, 110 (1995)
125. E. F. Schubert, S. W. Downey, C. Pinzone, and A. B. Emerson "Evidence of very strong inter-epitaxial-layer diffusion in Zn-doped GaInPAs/InP structures" *Applied Physics A* **60**, 525 (1995)
126. E. F. Schubert, C. J. Pinzone, and M. Geva "Phenomenology of Zn diffusion and incorporation in InP grown by organometallic vapor-phase epitaxy" *Applied Physics Letters* **67**, 700 (1995)
127. N. K. Dutta, W. S. Hobson, J. Lopata, E. F. Schubert, and M. Passlack "Single mode, high power lasers emitting at 980 nm" *Proceedings SPIE - Int. Society Opt. Eng*. (USA), Proceedings of the SPIE - The International Society for Optical Engineering, **2382**, 138 (1995)
128. M. Passlack, E. F. Schubert, W. S. Hobson, M. Hong, N. Moriya, S. N. G. Chu, K. Konstadinidis, J. P. Mannaerts, M. L. Schnoes, and G. J. Zydzik "Ga_2O_3 films for electronic and optoelectronic applications" *Journal of Applied Physics* **77**, 686 (1995)

1996

129. (**Book**) E. F. Schubert, Editor "Delta Doping of Semiconductors" 604 pages, Cambridge University Press, Cambridge ISBN 0-521-48288-7 (1996)
130. E. F. Schubert, N. E. J. Hunt, R. J. Malik, M. Micovic, and D. L. Miller "Temperature and Modulation Characteristics of Resonant-Cavity Light-Emitting Diodes" *IEEE J. Lightwave Technology* **14**, 1721 (1996)
131. W. Grieshaber, E. F. Schubert, I. D. Goepfert, R. F. Karlicek Jr., M. J. Schurman, and C. Tran "Competition between band gap and yellow luminescence in GaN and its relevance for optoelectronic devices" *Journal of Applied Physics* **80**, 4615 (1996)
132. L.-W. Tu, E. F. Schubert, M. Hong, and G. J. Zydzik "In-vacuum cleaving and coating of semiconductor laser facts using thin Si and a dielectric" *Journal of Applied Physics* **80**, 6448 (1996)

Pictiva EX2054
Samsung v Pictiva
IPR2024-01094

133. E. F. Schubert, W. Grieshaber, and I. D. Goepfert "Enhancement of deep acceptor activation in semiconductors by superlattice doping" *Applied Physics Letters* **69**, 3737 (1996)
134. E. F. Schubert "GaAs light-emitting diodes" in *Gallium Arsenide, 3rd Ed*., edited by Brozel M. R. and Stillman G. E. (INSPEC, The Institution of Electrical Engineers, London, 1996)

1997

135. W. Grieshaber, E. F. Schubert, R. F. Karlicek Jr., M. J. Schurman, and C. Tran "Relevance of the GaN yellow luminescence for light-emitting diodes" *Proceedings SPIE*, "Light-Emitting Diodes: Research, Manufacturing, and Applications" Vol. **3002**, 40 (1997)
136. M. Passlack, M. Hong, E. F. Schubert, G. J. Zydzik, J. P. Mannaerts, W. S. Hobson, and T. D. Harris "Equilibrium and non-equilibrium transport properties of metal - Ga_2O_3-GaAs MOS structures" *Journal of Applied Physics* **81**, 7647 (1997)
137. S. Fan, P. R. Villeneuve, J. D. Joannopoulos, and E. F. Schubert "High extraction efficiency of spontaneous emission from slabs of photonic crystals" *Physical Review Letters*, **78**, 3294 (1997)
138. A. Billeb, W. Grieshaber, D. Stocker, E. F. Schubert, and R. F. Karlicek Jr. "Microcavity effects in GaN epitaxial layers" *Applied Physics Letters* **70**, 2790 (1997)
139. S. Fan, P. R. Villeneuve, J. D. Joannopoulos, and E. F. Schubert "Photonic crystal light emitting diodes" *Proceedings SPIE*, "Light-Emitting Diodes: Research, Manufacturing, and Applications" Vol. **3002**, 67 (1997)
140. L.-W. Tu, E. F. Schubert, M. Hong, and G. J. Zydzik "In-situ cleaving and coating of semiconductor laser facets" *Proceedings of the March Meeting of the American Physical Society*, Kansas, MO, March 17 – 21 (1997)
141. E. F. Schubert, Editor, *SPIE Proceedings Series*, Vol. **3002** "Light-Emitting Diodes: Research, Manufacturing, and Applications" (1997)
142. E. F. Schubert, I. D. Goepfert, W. Grieshaber, and J. M. Redwing "Optical properties of Si-doped GaN" *Applied Physics Letters* **71**, 921 (1997)
143. E. F. Schubert, I. Goepfert, and J. M. Redwing "Evidence of compensating centers as origin of yellow luminescence in GaN" *Applied Physics Letters* **71**, 3224 (1997)
144. T. Peng, J. Piprek, G. Qiu, J. O. Olowolafe, K. M. Unruh, C. P. Swann, and E. F. Schubert "Band gap bowing and refractive index spectra of polycrystalline AlInN films deposited by sputtering" *Applied Physics Letters* **71**, 2439 (1997)
145. Shanhui Fan, P. R. Villeneuve, J. D. Joannopoulos, and E. F. Schubert "High extraction efficiency of spontaneous emission from slabs of photonic crystals" *Physical Review Letters*, **78**, 3294 (1997)
146. D. A. Stocker, E. F. Schubert, W. Grieshaber, J. M. Redwing, K. S. Boutros, J. S. Flynn, and R. P. Vaudo "Fabrication and optical pumping of laser cavities made by cleaving and wet chemical etching" *Material Research Society Conference Proceedings*, Fall (1997)
147. I. D. Goepfert, E. F. Schubert, and J. M. Redwing "Luminescence properties of Si-doped GaN and evidence of compensating defects as the origin of the yellow luminescence" *Mater. Research Society Conference Proceedings*, Fall (1997)
148. I. D. Goepfert, E. F. Schubert, and J. M. Redwing "Luminescence properties of Si-doped GaN and evidence of compensating defects as the origin of the yellow luminescence" *Mater. Research Society Conference Proceedings* Vol. **482**, page 679, Fall (1997)
149. D. A. Stocker, E. F. Schubert, W. Grieshaber, J. M. Redwing, K. S. Boutros, J. S. Flynn, and R. P. Vaudo "Fabrication and optical pumping of laser cavities made by cleaving and wet chemical etching" *Mater. Research Society Conference Proceedings*, Vol. **482**, 1009 (1997)

1998

150. E. F. Schubert and N. E. J. Hunt "15,000 hours stable operation of resonant-cavity light-emitting diodes" *Applied Physics A* **66**, 319 (1998)
151. D. A. Stocker, E. F. Schubert, K. S. Boutros, J. S. Flynn, R. P. Vaudo, V. M. Phanse, and J. M. Redwing "Optically pumped InGaN/GaN double heterostructure lasers with cleaved facets" *Electronics Letters* **34**, 373 (1998)
152. L. W. Tu, Y. C. Lee, D. Stocker, and E. F. Schubert "Spatial distributions of near-band-gap UV and yellow emission on MOCVD grown GaN epifilms" *Physical Review B*, **B58**, p. 10696 (October 1998)
153. L. W. Tu, Y. C. Lee, S. J. Chen, I. Lo, D. Stocker, and E. F. Schubert "Yellow luminescence depth profiling on GaN epifilms using reactive ion etching, *Applied Physics Letters* **73**, 2802 (November 1998)
154. D. A. Stocker, E. F. Schubert, W. Grieshaber, K. S. Boutros, and J. M. Redwing "Facet roughness analysis for InGaN/GaN lasers with cleaved facets" *Applied Physics Letters* **73**, 1925 (October 1998)
155. D. A. Stocker, E. F. Schubert, and J. M. Redwing "Crystallographic wet chemical etching of GaN" *Applied Physics Letters* **73**, 2654 (November 1998)

Pictiva EX2054
Samsung v Pictiva
IPR2024-01094

156. E. F. Schubert, W. Grieshaber, K. S. Boutros, and J. M. Redwing "Yellow luminescence in MOCVD-grown n-type GaN" SPIE Proceedings **3279** (edited by E. F. Schubert), 59 (March 1998)
157. D. A. Stocker, E. F. Schubert, W. Grieshaber, K. S. Boutros, J. S. Flynn, R. P. Vaudo, V. M. Phanse, and J. M. Redwing "InGaN/GaN double heterostructure laser with cleaved facets" *Proceedings of the SPIE Photonics West Conference* (March 1998)

1999

158. (**Invited**) E. F. Schubert and N. E. J. Hunt "Enhancement of Spontaneous Emission in Microcavities" in *Vertical-Cavity Surface-Emitting Lasers*, edited by Carl W. Wilmsen, Henryk Temkin, and Larry A. Coldren, ISBN 0 521 59022 1, p. 68 (Cambridge University Press, Cambridge, April 1999)
159. (**Invited**) E. F. Schubert and J. N Miller "Light-Emitting Diodes - An Introduction" *Encyclopedia of Electrical Engineering*, edited by John G. Webster, Vol. **11**, p. 326 (John Wiley and Sons, New York, March 1999)
160. I. D. Goepfert, E. F. Schubert, A. Osinsky, and P. E. Norris "Demonstration of efficient p-type doping in AlGaN/GaN superlattice structures" *Electronics Letters* **35**, 1109 (June 1999)
161. D. A. Stocker, E. F. Schubert, K. S. Boutros, and J. M. Redwing "Fabrication of smooth GaN-based laser facets" *MRS Internet Journal Nitride Semiconductor Research* **4S1**, G7.5 (March 1999)
162. X. Guo, J. W. Graff, and E. F. Schubert "Photon Recycling Semiconductor Light Emitting Diode" *IEDM Technical Digest*, **IEDM-99**, 600 (December 1999)

2000

163. D. A. Stocker, I. D. Goepfert, E. F. Schubert, K. S. Boutros, and J. M. Redwing "Crystallographic wet chemical etching of p-type GaN" *Journal of the Electrochemical Society* **147**, 763 (February 2000)
164. I. D. Goepfert, E. F. Schubert, A. Osinsky, and P. E. Norris "Efficient acceptor activation in AlGaN/GaN doped superlattices" accepted by the *MRS Internet Journal Nitride Semiconductor Research*, *see* http://nsr.mij.mrs.org/5S1/W3.85/ (March 2000)
165. X. Guo, J. W. Graff, E. F. Schubert, and R. F. Karlicek Jr. "Photon Recycling Semiconductor Light Emitting Diode" *SPIE Photonics West Proceedings Series* Vol. **3938**, p. 60 "Light-Emitting Diodes: Research, Manufacturing, and Applications" (March 2000)
166. Y.-L. Li, E. F. Schubert, J. W. Graff, A. Osinsky, and W. F. Schaff "Low-resistance ohmic contacts to p-type GaN" *Applied Physics Letters* **76**, 2728 (May 2000)
167. X. Guo, J. W. Graff, and E. F. Schubert "Photon recycling for high brightness LEDs" *Compound Semiconductors* **6** (4) page 1 (May 2000)
168. J. W. Graff and E. F. Schubert "Flat free-standing silicon diaphragms using silicon-on-insulator (SOI) wafers" *Sensors and Actuators A* **84**, 276 (August 2000)
169. I. D. Goepfert, E. F. Schubert, A. Osinsky, P. E. Norris, and N. N. Faleev "Experimental and theoretical study of acceptor activation and transport properties in *p*-type $Al_xGa_{1-x}N$/GaN superlattices" *Journal of Applied Physics* **88**, 2030 (August 2000)
170. L. Chernyak, A. Osinsky, V. Fuflyigin, and E. F. Schubert "Electron-beam induced increase of electron diffusion length in p-type GaN and AlGaN/GaN superlattices" *Applied Physics Letters* **77**, 875 (August 2000)
171. J. W. Graff, E. F. Schubert, A. Osinsky "On the reduction of base resistance in GaN-based heterojunction bipolar transistors" Proceedings of the 2000 IEEE/Cornell Conference on High-Performance Devices, p. 28, ISBN 0-7803-6381-7 (October 2000)
172. A. Osinsky, V. Fuflyigin, L. D. Zhu, A. B. Goulakov, J. W. Graff, and E. F. Schubert "New concepts and preliminary results for SiC bipolar transistors: $ZnSiN_2$ and $ZnGaN_2$ heterojunction emitters" Proceedings of the 2000 IEEE/Cornell Conference on High-Performance Devices, p. 168, ISBN 0-7803-6381-7 (October 2000)
173. D. A. Stocker, E. F. Schubert, and J. M. Redwing "Optically pumped InGaN/GaN lasers with wet-etched facets" *Applied Physics Letters* **77**, 4253 (December 2000)
174. E. L. Waldron, E. F. Schubert, J. W. Graff, A. Osinsky, M. J. Murphy, and W. F. Schaff "Evidence of polarization effects in doped AlGaN/GaN superlattices" Proceedings of MRS Fall Conference (December 2000)

2001

175. J. W. Graff, E. F. Schubert, and A. Osinsky "GaN/SiC mesa junctions for HBTs fabricated using selective photoelectrochemical etching" *Electronics Letters* **37**, 249 (February 2001)
176. X. Guo, E. F. Schubert, and J. Jahns, "Current crowding and optical saturation effects in GaInN/GaN LEDs grown on insulating substrates" *SPIE Photonics West Proceedings Series*. Vol. 4278, p. 133 "Light-Emitting Diodes: Research, Manufacturing, and Applications" (February 2001)
177. L. Chernyak, A. Osinsky, V. Fuflyigin, J. Graff, and E. F. Schubert "Minority Electron Transport Anisotropy in p-type $Al_xGa_{1-x}N$/GaN Superlattices" *IEEE Transactions on Electron Devices* **48**, 433 (March 2001)

Pictiva EX2054
Samsung v Pictiva
IPR2024-01094

178. X. Guo and E. F. Schubert "Current crowding and optical saturation effects in GaInN/GaN light-emitting diodes" *Applied Physics Letters* **78**, 3337 (May 2001)
179. X. Guo, Y.-L. Li, and E. F. Schubert "Efficiency of GaN/InGaN light-emitting diodes with interdigitated mesa geometry" *Applied Physics Letters* **79**, 1936 (Sept. 2001)
180. E. L. Waldron, J. W. Graff, and E. F. Schubert "Improved mobilities and resistivities in modulation doped p-type AlGaN/GaN superlattices" *Applied Physics Letters* **79,** 2737 (October 2001)
181. E. L. Waldron, J. W. Graff, and E. F. Schubert "Influence of doping profiles on p-type AlGaN/GaN superlattices," *Physica Status Solidi* (*A*) **188**, 889 (November 2001)
182. Y.-L. Li, J. W. Graff, E. L. Waldron, T. Gessmann, and E. F. Schubert "Novel polarization enhanced contacts to *n*-type GaN" *Physica Status Solidi (A)* 188, 359 (November 2001)

2002

183. T. Gessmann, Y.-L. Li, E. L. Waldron, J. W. Graff, and E. F. Schubert "Ohmic contacts to p-type GaN mediated by polarization fields in thin InGaN capping layers" *Applied Physics Letters* **80**, 986 (Feb 2002)
184. L. Chernyak, A. Schulte, J. W. Graff, and E. F. Schubert "Influence of electron injection on performance of GaN photodetectors" *Applied Physics Letters* **80**, 926 (Feb 2002)
185. T. Gessmann, Y.-L. Li, E. L. Waldron, and E. F. Schubert "Novel type of ohmic contacts to p-doped GaN using polarization fields in thin $In_xGa_{1-x}N$ capping layers" *Journal of Electronic Materials* **31**, 416 (May 2002)
186. T. Gessmann, J. W. Graff, Y.-L. Li, E. L. Waldron, and E. F. Schubert "Ohmic contact technology in III-V nitrides using polarization effects in cap layers" Proceedings of the *Lester Eastman conference on high-speed devices* (Sep 2002)
187. T. Gessmann, J. W. Graff, Y.-L. Li, E. L. Waldron, and E. F. Schubert "Ohmic contacts to III-V nitrides using polarization effects of cap layers" *Journal of Applied Physics* **92**, 3740 (October 2002)

2003

188. E. L. Waldron, E. F. Schubert, and A. M. Dabiran "Multisubband photoluminescence in p-type modulation-doped AlGaN/GaN superlattices" *Physical Review B* **67**, 045327 (January 2003)
189. (**Book**), E. F. Schubert "Light-emitting diodes" 328 pages, 154 line diagrams, 21 half-tones, 21 tables, Hardback ISBN: 0521823307 Paperback ISBN: 0521533511 (Cambridge University Press, Cambridge UK, May 2003)
190. T. Gessmann, Y.-L. Li, E. F. Schubert, J. W. Graff, and J. K. Sheu "GaInN light-emitting diodes with omni-directional reflectors", *SPIE Proceedings Series* **4996** "Light Emitting Diodes: Research, Manufacturing, and Applications VII" p. 26 (July 2003)
191. T. Gessmann, E. F. Schubert, J. W. Graff, and K. Streubel "AlGaInP light-emitting diodes with omni-directionally reflecting submount", *SPIE Proceedings Series* **4996** "Light Emitting Diodes: Research Manufacturing, and Applications VII" p. 139 (July 2003)
192. E. F. Schubert, K. J. Linden, H. Yao, D. J. McGraw (Editors) "Light-Emitting Diodes: Research, Manufacturing, and Applications VII" *SPIE Proceedings Series* **4996**, SPIE-International Society for Optical Engineering ISBN: 081944796X Paperback, 278pp (July 2003)
193. Y.-L. Li, T. Gessmann, E. F. Schubert, and J. K. Sheu "Carrier dynamics in nitride-based light-emitting p-n junction diodes with two active regions emitting at different wavelengths" *Journal of Applied Physics* **94**, 2167 (August 2003)
194. J. M. Shah, Y.-L. Li, T. Gessmann, and E. F. Schubert "Experimental analysis and theoretical model for anomalously high ideality factors ($n >> 2.0$) in AlGaN/GaN p-n junction diodes" *Journal Applied Physics* **94,** 2627 (August 2003)
195. T. Gessmann, E. F. Schubert, J. W. Graff, K. Streubel, and C. Karnutsch "Omni-directionally reflective contacts for light-emitting diodes" *IEEE Electron Devices Letters* **24**, 683 (November 2003)
196. E. L. Waldron, Y.-L. Li, E. F. Schubert, J. W. Graff, and J. K. Sheu "Experimental study of perpendicular transport in weakly coupled $Al_xGa_{1-x}N$/GaN superlattices and theoretical model based on sequential tunneling" accepted for publication in *Applied Physics Letters* **83**, 4975 (2003)

2004

197. J. M. Shah, Y. Li, T. Gessmann, and E. F. Schubert "Experimental analysis and a new theoretical model for anomalously high ideality factors ($n >> 2.0$) in GaN-based p-n junction diodes" *Mater. Research Society Symposium Proceedings* **798**, 113 (January 2004)
198. T. Gessmann, H. Luo, J.-Q. Xi, K. P. Streubel, and E. F. Schubert "Light-emitting diodes with integrated omnidirectionally reflective contacts" *Proceedings of SPIE "Light-emitting diodes: Research, Manufacturing and Applications VIII*" **5366**, 53 (January 2004)

Pictiva EX2054
Samsung v Pictiva
IPR2024-01094

199. T. Gessmann and E. F. Schubert "High-efficiency AlGaInP light-emitting diodes for solid-state lighting applications" *Journal of Applied Physics* **95**, 2203 (March 2004)
200. J. K. Kim, E. L. Waldron, Y.-L. Li, T. Gessmann, E. F. Schubert, H. W. Jang, and J.-L. Lee "P-type conductivity in bulk $Al_xGa_{1-x}N$ and $Al_xGa_{1-x}N/Al_yGa_{1-y}N$ superlattices with average Al mole fraction > 20 %" *Applied Physics Letters* **84**, 3310 (May 2004)
201. J. K. Kim, T. Gessmann, H. Lu, and E. F. Schubert "GaInN light-emitting diodes with $RuO_2/SiO_2/Ag$ omni-directional reflector" *Applied Physics Letters* **84**, 4508 (May 2004)
202. Y.-L. Li, J. M. Shah, P.-H. Leung, T. Gessmann, and E. F. Schubert, "Performance characteristics of white light sources consisting of multiple light-emitting diodes" *Proceedings of the SPIE - The International Society for Optical Engineering* **5187**, 178 (August 2004)
203. Y. Xi and E. F. Schubert "Junction-temperature measurement in GaN ultraviolet light-emitting diodes using diode forward-voltage method" *Applied Physics Letters* **85**, 2163 (Sept. 2004)
204. Y. Xi and E. F. Schubert "Junction-temperature measurement in GaN UV light-emitting diodes using the diode forward voltage" *2004 Proceedings of the Lester Eastman Conference on High-Performance Devices – Selected Topics in Electronics and Systems* edited by Robert E. Leoni III, Vol. **35**, p. 84 (December 2004)
205. J.-Q. Xi, M. Ojha, W. Cho, T. Gessmann, E. F. Schubert, J. L. Plawsky, and W. N. Gill "Omni-directional reflector using a low refractive index material" *2004 Proceedings of the Lester Eastman Conference on High-Performance Devices – Selected Topics in Electronics and Systems* edited by Robert E. Leoni III, Vol. **35**, p. 102 (December 2004)
206. (**Invited**) J. K. Kim, J. Q. Xi, H. Luo, T. Gessmann, and E. F. Schubert "High-Reflectivity Omni-Directional Reflectors for Light-Emitting Diodes" *Proceedings of the IEDMS* (December 2004)

2005

207. Y. Xi, J.-Q. Xi, T. Gessmann, J. M. Shah, J. K. Kim, E. F. Schubert, A. J. Fischer, M. H. Crawford, K. H. A. Bogart, and A. A. Allerman "Junction and carrier temperature measurements in deep-ultraviolet light-emitting diodes using three different methods" *Applied Physics Letters* **86**, 031907 (January 2005)
208. Y. Xia, E. Williams, Y. Park, I. Yilmaz, J. M. Shah, E. F. Schubert, and C. Wetzel "Discrete steps in the capacitance-voltage characteristics of GaInN/GaN light-emitting diode structures" in "GaN, AlN, InN, and Their Alloys", edited by C. Wetzel, B. Gil, M. Kuzuhara, and M. Manfra, *Materials Research Society (MRS) Symposium Proceedings* **831**, E3.38 (MRS, Warrendale PA, January 2005)
209. Y. Xi, J.-Q. Xi, T. Gessmann, J. M. Shah, J. K. Kim, E. F. Schubert, A. J. Fischer, M. H. Crawford, K. H. A. Bogart, and A. A. Allerman "Junction temperature measurements in deep-UV light-emitting diodes" in "GaN, AlN, InN and Their Alloys" edited by C. Wetzel, B. Gil, M. Kuzuhara, and M. Manfra, *Materials Research Society (MRS) Symposium Proceedings* **831**, E1.7 (MRS, Warrendale PA, January 2005)
210. S. Chhajed, Y. Xi, Y.-L. Li, T. Gessmann, and E. F. Schubert "Influence of junction temperature on luminous efficacy and color rendering properties of a trichromatic LED-based white light source" *Journal of Applied Physics* **97**, 054506 (February 2005)
211. (**Invited**) J. K. Kim, H. Luo, Y. Xi, J. M. Shah, T. Gessmann, and Schubert E. F. "Enhancement of light extraction in GaInN light-emitting diodes by diffuse omni-directional reflectors" *Proceedings of the Second Asia-Pacific Workshop on Wide-gap Semiconductors* (APWS-2005) Hsinchu Lakeshore Hotel, Hsinchu, Taiwan, March 7–9 (March 2005)
212. M. Furis, A. N. Cartwright, E. L. Waldron, and E. F. Schubert "Spectral and temporal resolution of recombination from multiple excitation states in modulation-doped AlGaN/GAN MQW heterostructures" *Applied Physics Letters* **86**, 162103 (April 2005)
213. (**Invited**) E. F. Schubert and J. K. Kim "Solid-state light sources getting smart" *Science* **308**, 1274 (May 2005)
214. J.-Q. Xi, M. Ojha, W. Chow, C. Wetzel, T. Gessmann, E. F. Schubert, J. L. Plawsky, and W. N. Gill "Omni-directional reflector using a low refractive index material" *Proceedings of the Conference on Lasers and Electrooptics* (CLEO), Baltimore MD, May 22-27 (May 2005)
215. J. K. Kim, H. Luo, E. F. Schubert, J. Cho, C. Sone, and Y. Park "Strongly enhanced phosphor efficiency in GaInN white light-emitting diodes using remote phosphor configuration and diffuse reflector cup" *Japanese Journal Applied Physics – Express Letter* **44**, L 649 (May 2005)
216. H. Luo, J. K. Kim, E. F. Schubert, J. Cho, C. Sone, and Y. Park "Analysis of high-power packages for phosphor-based white-light-emitting diodes" *Applied Physics Letters* **86**, 243505 (June 2005)
217. J.-Q. Xi, M. Ojha, W. Cho, J. L. Plawsky, W. N. Gill, T. Gessmann, and E. F. Schubert "Omnidirectional reflector using nanoporous SiO_2 as a low-refractive-index material" *Optics Letters* **30,** 1518 (June 2005)
218. J.-Q. Xi, J. K. Kim, and E. F. Schubert "Silica nanorod-array films with very low refractive indices" *Nano Letters* **5**, 1385 (July 2005)

Pictiva EX2054
Samsung v Pictiva
IPR2024-01094

219. (**Invited**) E. F. Schubert, J. K. Kim, and T. Gessmann "Light-emitting diodes" *Kirk-Othmer Encyclopedia of Chemical Technology*; on-line access at < www.mrw.interscience.wiley.com/kirk/ > (John Wiley and Sons and Wiley Inter-Science, New York NY, July 2005)
220. J.-Q. Xi, M. Ojha, J. L. Plawsky, W. N. Gill, J. K. Kim, and E. F. Schubert "Internal high-reflectivity omni-directional reflectors" *Applied Physics Letters* **87**, 031111 (July 2005)
221. (**Invited**) E. F. Schubert and T. Gessmann "Light-emitting diodes" published in "*Elsevier Encyclopedia of Condensed Matter Physics*" edited by F. Bassani, J. Liedl, and P. Wyder (Elsevier, Amsterdam, Netherlands, September 2005)
222. Y. Xi, T. Gessmann, J.-Q. Xi, J. K. Kim, J. M. Shah, E. F. Schubert, A. J. Fischer, M. H. Crawford, K. H. A. Bogart, A. A. Allerman "Junction temperature in ultraviolet light-emitting diodes" Special Issue on Ultraviolet Semiconductor Sources, *Japanese Journal of Applied Physics* **44**, 7260 (October 2005)
223. J.-Q. Xi, J. K. Kim, and E. F. Schubert "Low-refractive-index material with oblique-angle deposition" *LEOS Newsletter* Vol. **19** No. 6, page 10 (December 2005)
224. (**Invited**) E. F. Schubert, T. Gessmann, and J. K. Kim, "Inorganic semiconductors for light-emitting diodes" in *Organic Light-Emitting Devices, Synthesis, Properties, and Applications* edited by K. Müllen and U. Scherf, ISBN 3-527-31218-8 (Wiley VCH, New York, USA, 2006)
225. (**Invited**) E. F. Schubert, J. K. Kim, J.-Q. Xi, and H. Luo "Innovations in Light-emitting devices" in *The Physics of Semiconductor Devices* edited by V. Kumar, S. K. Agarwal, and S. N. Singh (Allied Publishers PVT. Limited, New Delhi, India, 2005)
226. J. K. Kim, J.-Q. Xi, H. Luo, J. Cho, C. Sone, Y. Park, and E. F. Schubert "Enhancement of light extraction in GaN light-emitting diodes by omnidirectional reflectors with ITO nanorod low-refractive-index layer" *Proceedings SPIE, Illumination Engineering, Fifth International Conference on Solid-State Lighting*, Vol. **5941**, page 5941 0K-1 – 6 (2005)

2006

227. J. K. Kim, T. Gessmann, E. F. Schubert, J.-Q. Xi, H. Luo, J. Cho, C. Sone, Y. Park "GaInN light-emitting diode with conductive omnidirectional reflector having a low-refractive index indium-tin oxide (ITO) layer" *Applied Physics Letters* **88**, 013501 (January 2006)
228. J. K. Kim, H. Luo, Y. Xi, J. M. Shah, T. Gessmann, and E. F. Schubert "Light extraction in GaInN light-emitting diodes using diffuse omnidirectional reflectors" *Journal of the Electrochemical Society* **153**, G105 (January 2006)
229. (**Invited**) J. K. Kim, J.-Q. Xi, E. F Schubert "Omni-directional reflectors for light-emitting diodes" *Light-Emitting Diodes: Research, Manufacturing, and Applications X, Proceedings of SPIE* **6134**, 61340D-1 (January 2006)
230. J. K. Kim, J.-Q. Xi, H. Luo, Jaehee Cho, Cheolsoo Sone, Yongjo Park, T. Gessmann, John M. Zavada, H. X. Jiang, and E. F Schubert, "GaN light-emitting triodes (LETs) for high-efficiency hole-injection and light emission" *Light-Emitting Diodes: Research, Manufacturing, and Applications X, Proceedings of SPIE* **6134**, 61340K-1 (January 2006)
231. J.-Q. Xi, J. K. Kim, E. F. Schubert, D. Ye, T.-M. Lu, S.-Y. Lin, and J. S. Juneja "Very low-refractive-index optical thin films consisting of an array of SiO_2 nanorods" *Optics Letters* **31**, 601 (March, 2006)
232. J. M. Shah, T. Gessmann, H. Luo, Y. Xi, K. Chen, J. K. Kim, and E. F. Schubert "Reduction of base access resistance in AlGaN/GaN heterojunction bipolar transistors using GaInN base cap layer and selective epitaxial growth" *Materials Research Society (MRS) Symposium Proceedings* Vol. **892**, page 0892-FF13-10.1 (March 2006)
233. F. Shahedipour-Sandvik, E. F. Schubert, B. K. Crone, H. Liu, Y-K. Su (editors) "Solid-State Lighting Materials and Devices" Symposium DD *Materials Research Society (MRS) Proceedings Volume 916* (May 2006)
234. C. W. Litton, D. Johnstone, S. Akarca-Biyikli, K. S. Ramaiah, I. Bhat, T. P. Chow, J. K. Kim, and E. F. Schubert "Effect of C/Si ratio on deep levels in epitaxial 4H–SiC" *Applied Physics Letters* **88**, 121914 (April 2006)
235. J. K. Kim, E. F. Schubert, Jaehee Cho, Cheolsoo Sone, J. Y. Lin, H. X. Jiang, and John M. Zavada "GaN light-emitting triode (LET) for high-efficiency hole injection" *Journal of The Electrochemical Society* **153**, G734 (June 2006)
236. (**Book**) E. F. Schubert "Light-emitting diodes, second edition" 422 pages, 255 line diagrams, 32 half-tones, 30 exercises, 287 figures, Hardback ISBN-13: 9780521865388 (Cambridge University Press, Cambridge UK, June 2006)
237. H. Luo, J. K. Kim, Y. A. Xi, E. F. Schubert, J. Cho, C. Sone, and Y. Park "Trapped whispering-gallery optical modes in white light-emitting diode lamps with remote phosphor" *Applied Physics Letters* **89**, 041125 (July 2006)

Pictiva EX2054
Samsung v Pictiva
IPR2024-01094

238. Y. Andrew Xi, Xiaolu Li, J. K. Kim, F. Mont, T. Gessmann, Hong Luo, and E. F Schubert "Quantitative assessment of diffusivity and specularity of surface-textured reflectors for light extraction in light-emitting diodes" *Journal of Vacuum Science and Technology* **A 24**, 1627 (July 2006)
239. Y. A. Xi, K. X. Chen, F. Mont, J. K. Kim, C. Wetzel, E. F. Schubert, W. Liu, X. Li, and J. A. Smart "Very high quality AlN grown on (0001) sapphire by metal-organic vapor phase epitaxy" *Applied Physics Letters* **89**, 103106 (September 2006)
240. J. K. Kim, J.-Q. Xi, H. Luo, Schubert E. F., Jaehee Cho, Cheolsoo Sone and Yongjo Park "Enhanced light-extraction in GaInN near-ultraviolet light-emitting diode with Al-based omnidirectional reflector having NiZn/Ag microcontacts" *Applied Physics Letters* **89**, 141123 (October 2006)
241. J.-Q. Xi, Luo Hong, A.J. Pasquale, Jong Kyu Kim, and E. F Schubert "Enhanced light extraction in GaInN light-emitting diode with pyramid reflector" *IEEE Photonics Technology Letters* **18***,* 2347 (November 2006)
242. (**Invited**) E. F. Schubert, J. K. Kim, H. Luo, and J.-Q. Xi "Solid-state lighting – A benevolent technology" *Reports on Progress in Physics* **69**, 3069 (November 2006)

2007

243. Frank W. Mont, J. K. Kim, M. F. Schubert, H. Luo, E. F. Schubert, and R. W. Siegel "High refractive index nanoparticle-loaded encapsulants for light-emitting diodes" *Proceedings SPIE* **6486**, 64861C (February 2007)
244. F. W. Mont, H. Luo, M. F. Schubert, J. K. Kim, E. F. Schubert, and R. W. Siegel, "Nanoparticle-loaded encapsulation materials for light-emitting diode applications" *Materials Research Society Symposium Proceedings* **955**, I13-02 (January 2007)
245. J.-Q. Xi, Hong Luo, Jong Kyu Kim, and E. F. Schubert "High light-extraction efficiency in GaInN light-emitting diode with pyramid reflector" *SPIE Photonics West*, *Proceedings SPIE* **6486**, 648606, San Jose, CA, January 20 – 25 (January 2007)
246. Y. Andrew Xi, K. X. Chen, F. W. Mont, J. K. Kim, W. Lee, E. F. Schubert, W. Liu, X. Li, and J. A. Smart "Kinetic study of Al-mole fraction in $Al_xGa_{1-x}N$ grown on c-plane sapphire and AlN bulk substrates by metal-organic vapor-phase epitaxy" *Applied Physics Letters* **90**, 051104 (January 2007)
247. Y. Andrew Xi, K. X. Chen, F. Mont, J. K. Kim, E. F. Schubert, W. Liu, X. Li, J. A. Smart "Comparative study of n-type AlGaN grown on sapphire by using a superlattice layer and a low-temperature AlN interlayer" *Journal of Crystal Growth* **299**, 59–62 (January 2007)
248. J.-Q. Xi, Martin F. Schubert, J. K. Kim, E. Fred Schubert, Minfeng Chen, Shawn-Yu Lin, Wayne Liu, and Joe A. Smart "Optical thin-film materials with low refractive index for broadband elimination of Fresnel reflection" *Nature Photonics* **1**, 176 (March 2007)
249. Martin. F. Schubert, J.-Q. Xi, J. K. Kim, and E. F Schubert "Distributed Bragg reflector consisting of high- and low-refractive-index thin film layers made of the same material" *Applied Physics Letters* **90**, 141115 (April 2007)
250. Y. Andrew Xi, K. X. Chen, F. W. Mont, J. K. Kim, E. F. Schubert, C. Wetzel, W. Liu, X. Li, and J. A. Smart "Optimization of high-quality AlN epitaxially grown on (0001) sapphire by metal-organic vapor-phase epitaxy" *Journal of Electronic Materials* (Special Issue) **36**, 533 (DOI: 10.1007/s11664-007-0099-3) (May 2007)
251. Kaixuan X. Chen, Y. A. Xi, F. W. Mont, J. K. Kim, E. F. Schubert, W. Liu, X. Li, and J. A. Smart "Recombination dynamics in ultraviolet light-emitting diodes with Si-doped $Al_xGa_{1-x}N/Al_yGa_{1-y}N$ multiple quantum well active regions" *Journal of Applied Physics* **101**, 113102 (June 2007)
252. Martin F. Schubert, Sameer Chhajed, Jong Kyu Kim, E. Fred Schubert, and Jaehee Cho "Polarization of light emission by 460 nm GaInN/GaN light-emitting diodes grown on (0001) oriented sapphire substrates" *Applied Physics Letters* **91**, 051117 (August 2007)
253. Martin F. Schubert, Ahmed Noemaun, Sameer Chhajed, Jong Kyu Kim, E. Fred Schubert, and Cheolsoo Sone "Encapsulation shape with non-rotational symmetry designed for extraction of polarized light from unpolarized sources" *Optics Express* **15***,* 10452 (August 2007)
254. (**Invited**) E. Fred Schubert and Jong Kyu Kim "Low-refractive index materials: A new class of optical thin-film materials" *Physica Status Solidi B* **244**, 3002 (DOI: 10.1002/pssb.200675603) (August 2007)
255. Kaixuan X. Chen, Q. Dai, W. Lee, J. K. Kim, E. F. Schubert, W. Liu, S. Wu, X. Li, and J. A. Smart "Parasitic sub-band-gap emission originating from compensating native defects in Si doped AlGaN" *Applied Physics Letters* **91**, 121110 (September 2007)
256. Martin F. Schubert, Sameer Chhajed, Jong Kyu Kim, E. Fred Schubert, and Jaehee Cho "Linearly polarized emission from GaInN light-emitting diodes with polarization-enhancing reflector" *Optics Express* **15**, 11213 (September 2007)
257. (**Invited**) E. F. Schubert, J. K. Kim, and J.-Q. Xi "Light-emitting diodes hit the centenary milestone" *Compound Semiconductors* October issue, page 20–23 (October 2007)

Pictiva EX2054
Samsung v Pictiva
IPR2024-01094

258. Min-Ho Kim, Martin F. Schubert, Qi Dai, Jong Kyu Kim, E. Fred Schubert, Joachim Piprek, and Yongjo Park "Origin of efficiency droop in GaN-based light-emitting diodes" *Applied Physics Letters* **91**, 183507 (October 2007)
259. Martin F. Schubert, Sameer Chhajed, Jong Kyu Kim, E. Fred Schubert, Daniel D. Koleske, Mary H. Crawford, Stephen R. Lee, Arthur J. Fischer, Gerald Thaler "Effect of dislocation density on efficiency droop in GaInN/GaN light-emitting diodes" *Applied Physics Letters* **91**, 231114 (December 2007)

2008

260. Jong Kyu Kim, S. Chhajed, M. F. Schubert, E. F. Schubert, A. J. Fischer, M. H. Crawford, J. Cho, H. Kim, and C. Sone "Light-extraction enhancement of GaInN light-emitting diodes by graded-refractive-index indium tin oxide anti-reflection contact" *Advanced Materials* **20**, 801 (March 2008)
261. Frank W. Mont, Jong Kyu Kim, Martin F. Schubert, E. Fred Schubert, and Richard W. Siegel "High-refractive-index TiO_2-nanoparticle-loaded encapsulants for light-emitting diodes" *Journal of Applied Physics* **103**, 083120 (April 2008)
262. Martin F. Schubert, Frank W. Mont, Sameer Chhajed, David J. Poxson, Jong Kyu Kim, and E. Fred Schubert "Design of multilayer antireflection coatings made from co-sputtered and low-refractive-index materials by genetic algorithm" *Optics Express* Vol. **16**, 5290 (April 2008)
263. Martin F. Schubert, Jiuru Xu, Jong Kyu Kim, E. Fred Schubert, Min Ho Kim, Sukho Yoon, Soo Min Lee, Cheolsoo Sone, Tan Sakong, and Yongjo Park "Polarization-matched GaInN/AlGaInN multi-quantum-well light-emitting diodes with reduced efficiency droop" *Applied Physics Letters* **93**, 041102 (July 2008)
264. David J. Poxson, Frank W. Mont, Martin F. Schubert, Jong Kyu Kim, and E. Fred Schubert "Quantification of porosity and deposition rate of nano-porous films grown by oblique-angle deposition" *Applied Physics Letters* **93**, 101914 (September 2008)
265. Mei-Ling Kuo, David J. Poxson, Yong Sung Kim, Frank W. Mont, Jong Kyu Kim, E. Fred Schubert, and Shawn-Yu Lin "Realization of a near-perfect antireflection coating for silicon solar energy utilization" *Optics Letters* **33**, 2527 (October 2008)
266. Jong Kyu Kim, Ahmed N. Noemaun, Frank W. Mont, David Meyaard, E. Fred Schubert, David J. Poxson, Hyunsoo Kim, Cheolsoo Sone, and Yongjo Park "Elimination of total internal reflection in GaInN light-emitting diodes by graded-refractive-index micropillars" *Applied Physics Letters* **93**, 221111 (November 2008)
267. Sameer Chhajed, Martin F. Schubert, Jong Kyu Kim, and E. Fred Schubert "Nanostructured multilayer graded-index antireflection coating for Si solar cells with broadband and omnidirectional characteristics" *Applied Physics Letters* **93**, 251108 (November 2008)
268. K. X. Chen, Q. Dai, W. Lee, J. K. Kim, E. F. Schubert, J. Grandusky, M. Mendrick, X. Li, and J. A. Smart "Effect of dislocations on electrical and optical properties of n-type $Al_{0.34}Ga_{0.66}N$" *Applied Physics Letters* **93**, 192108 (November 2008)
269. Jong Kyu Kim and E. Fred Schubert "Transcending the replacement paradigm of solid-state lighting" *Optics Express* **16**, 21835 (December 2008)

2009

270. Jiuru Xu, Martin F. Schubert, Ahmed N. Noemaun, Di Zhu, Jong Kyu Kim, E. Fred Schubert, Min Ho Kim, Hun Jae Chung, Sukho Yoon, Cheolsoo Sone, and Yongjo Park "Reduction in efficiency droop, forward voltage, ideality factor, and wavelength shift in polarization-matched GaInN/GaInN multi-quantum-well light-emitting diodes" *Applied Physics Letters* **94**, 011113 (January 2009)
271. Di Zhu, Jiuru Xu, Ahmed N. Noemaun, Jong Kyu Kim, E. Fred Schubert, Mary H. Crawford, and Daniel D. Koleske, "The origin of the high diode-ideality factors in GaInN/GaN multiple quantum well light-emitting diodes" *Applied Physics Letters* **94**, 081113 (February 2009)
272. Martin F. Schubert, Jiuru Xu, Qi Dai, Frank W. Mont, Jong Kyu Kim, and E. Fred Schubert "On resonant optical excitation and carrier escape in GaInN/GaN quantum wells" *Applied Physics Letters* **94**, 081114 (February 2009)
273. Qi Dai, M. F. Schubert, M. H. Kim, J. K. Kim, E. F. Schubert, D. D. Koleske, M. H. Crawford, S. R. Lee, A. J. Fischer, G. Thaler, and M. A. Banas "Internal quantum efficiency and nonradiative recombination coefficient of GaInN / GaN multiple quantum wells with different dislocation densities" *Applied Physics Letters* **94**, 111109 (March 2009)
274. David J. Poxson, Martin F. Schubert, Frank W. Mont, E. F. Schubert, and Jong Kyu Kim "Broadband omnidirectional antireflection coatings optimized by genetic algorithm" *Optics Letters* **34**, 728 (March 2009)
275. Roya Mirhosseini, Martin F. Schubert, Sameer Chhajed, Jaehee Cho, Jong Kyu Kim, and E. Fred Schubert "Improved color rendering and luminous efficacy in phosphor-converted white light-emitting diodes by use of dual-blue emitting active regions" *Optics Express* **17**, 10806 (June 2009)

Pictiva EX2054
Samsung v Pictiva
IPR2024-01094

276. Martin F. Schubert, Qi Dai, Jiuru Xu, Jong Kyu Kim, and E. Fred Schubert "Electroluminescence induced by photoluminescence excitation in GaInN/GaN light-emitting diodes" *Applied Physics Letters* **95**, 191105 (November 2009)
277. Jong Kyu Kim and E. Fred Schubert "Enhancement in light-extraction efficiency of GaN-based light-emitting diodes" in *Advanced Semiconductor Materials and Devices Research: III-Nitrides and SiC*; edited by H-Y Cha (Transworld Research Network, Kerala, India, 2009)

2010

278. J. Cho, A. Mao, J. K. Kim, J. K. Son, Y. Park and E. F. Schubert "Analysis of reverse tunneling current in GaInN light-emitting diodes" *Electronics Letters* **46**, 156 (January 2010)
279. M. Ojha, A. Chatterjee, F. Mont, E. F. Schubert, P. C. Wayner Jr., and J. L. Plawsky "The role of solid surface structure on dropwise phase change processes" *International Journal of Heat and Mass Transfer* **53**, 910 (February 2010)
280. Wonseok Lee, Min-Ho Kim, Di Zhu, Ahmed N. Noemaun, Jong Kyu Kim, and E. F. Schubert "Growth and characteristics of GaInN/GaInN multiple quantum well light-emitting diodes" *Journal of Applied Physics* **107**, 063102 (March 2010)
281. Di Zhu, Ahmed N. Noemaun, Martin F. Schubert, Jaehee Cho, E. Fred Schubert, Mary H. Crawford, and Daniel D. Koleske "Enhanced electron capture and symmetrized carrier distribution in GaInN light-emitting diodes having tailored barrier doping" *Applied Physics Letters* **96**, 121110 (March 2010)
282. Martin F. Schubert and E. Fred Schubert "Effect of heterointerface polarization charges and well width upon capture and dwell time for electrons and holes above GaInN/GaN quantum wells" *Applied Physics Letters* **96**, 131102 (March 2010)
283. Martin F. Schubert, David J. Poxson, Frank W. Mont, and E. Fred Schubert "Performance of anti-reflection coatings consisting of multiple discrete layers and comparison with continuously graded anti-reflection coatings" *Applied Physics Express* **3**, 082502 (August 2010)
284. Ming Ma, Frank W. Mont, David J. Poxson, Jaehee Cho, E. Fred Schubert, Roger E. Welser, and Ashok K. Sood "Enhancement of photovoltaic cell response due to high-refractive-index encapsulants" *Journal of Applied Physics* **108**, 043102 (August 2010)
285. Qi Dai, Qifeng Shan, Jing Wang, Sameer Chhajed, Jaehee Cho, E. Fred Schubert, Mary H. Crawford, Daniel D. Koleske, Min-Ho Kim, and Yongjo Park "Carrier recombination mechanisms and efficiency droop in GaInN/GaN light-emitting diodes" *Applied Physics Letters* **97**, 133507 (September 2010)
286. David J. Poxson, Frank W. Mont, Martin F. Schubert, Jong Kyu Kim, Jaehee Cho, and E. Fred Schubert "Demonstration of optical interference filters utilizing tunable refractive index layers" *Optics Express* **18**, A594 (October 2010)
287. Qifeng Shan, Qi Dai, Sameer Chhajed, Jaehee Cho, and E. Fred Schubert "Analysis of thermal properties of GaInN light-emitting diodes and laser diodes" *Journal of Applied Physics* **108**, 084504 (October 2010)

2011

288. Ann Mao, Jaehee Cho, Qi Dai, and E. Fred Schubert, Joong Kon Son, and Yongjo Park "Characteristics of dot-like green satellite emission in GaInN light-emitting diodes" *Applied Physics Letters* **98**, 023503 (January 2011)
289. Sameer Chhajed, Jaehee Cho, E. Fred Schubert, Jong Kyu Kim, Daniel D. Koleske, and Mary H. Crawford "Temperature-dependent light-output characteristics of GaInN light-emitting diodes with different dislocation densities" *Physica Status Solidi (A)* **208**, 947 (January 2011)
290. Qi Dai, Qifeng Shan, Jaehee Cho, E. Fred Schubert, Mary H. Crawford, Daniel D. Koleske, Min-Ho Kim, and Yongjo Park "On the symmetry of efficiency-versus-carrier-concentration curves in GaInN/GaN light-emitting diodes and relation to droop-causing mechanisms" *Applied Physics Letters* **98**, 033506 (January 2011)
291. Sameer Chhajed, Wonseok Lee, Jaehee Cho, E. Fred Schubert, and Jong Kyu Kim "Strong light-extraction enhancement in GaInN light-emitting diodes by using self-organized nanoscale patterning of p-type GaN" *Applied Physics Letters* **98**, 071102 (February 2011)
292. Roger E. Welser, Adam W. Sood, Ashok K. Sood, David J. Poxson, Sameer Chhajed, Jaehee Cho, E. Fred Schubert, Dennis L. Polla, and Nibir K. Dhar "Ultra-High Transmittance through Nanostructure-Coated Glass for Solar Cell Applications" *Proceedings of the SPIE* **8035**, 80350X (May 2011)
293. Xing Yan, Frank W. Mont, David J. Poxson, Jaehee Cho, E. Fred Schubert, Min-Ho Kim, and Cheolsoo Sone "Electrically conductive thin-film color filters made of single-material – indium-tin-oxide" *Journal of Applied Physics* **109**, 103113 (May 2011)

Pictiva EX2054
Samsung v Pictiva
IPR2024-01094

294. Sameer Chhajed, David J. Poxson, Xing Yan, Jaehee Cho, E. Fred Schubert, Roger E. Welser, Ashok K. Sood, and Jong Kyu Kim "Nanostructured Multilayer Tailored-Refractive-Index Antireflection Coating for Glass with Broadband and Omnidirectional Characteristics" *Applied Physics Express* **4**, 052503 (May 2011)
295. David J. Poxson, Mei-Ling Kuo, Frank W. Mont, Y.-S. Kim, Xing Yan, Roger E. Welser, Ashok K. Sood, Jaehee Cho, Shawn-Yu Lin, and E. Fred Schubert "High-performance anti-reflection coatings utilizing nanoporous layers" *MRS Bulletin* **36**, 434 (June 2011)
296. Guan-Bo Lin, Martin F. Schubert, Jaehee Cho (SID Member), E. Fred Schubert, Hyungkun Kim "A complementary matching technique to reduce the variance of optical and electrical properties of light-emitting diodes" *Journal of the SID* **19/6**, 431 (June 2011)
297. David S. Meyaard, Qifeng Shan, Qi Dai, Jaehee Cho, E. Fred Schubert, Min-Ho Kim, and Cheolsoo Sone "On the temperature dependence of electron leakage from the active region of GaInN/GaN light-emitting diodes" *Applied Physics Letters* **99**, 041112 (July 2011)
298. Ahmed N. Noemaun, Frank W. Mont, Guan-Bo Lin, Jaehee Cho, E. Fred Schubert, Gi Bum Kim, Cheolsoo Sone, and Jong Kyu Kim "Optically functional surface composed of patterned graded-refractive-index coatings to enhance light-extraction of GaInN light-emitting diodes" *Journal of Applied Physics* **110**, 054510 (September 2011)
299. Roger E. Welser, Gopal G. Pethuraja, Ashok K. Sood, Oleg A. Laboutin, Mark Chaplin, Van Un, Wayne Johnson, Adam W. Sood, David J. Poxson, Jaehee Cho, E. Fred Schubert, Pradeep Haldar, Jennifer L. Harvey "High voltage quantum well waveguide solar cells" *Proceedings of the SPIE* Vol. **8111**, page 81110I-1 (September 2011)
300. David S. Meyaard, Guan-Bo Lin, Qifeng Shan, Jaehee Cho, E. Fred Schubert, Hyunwook Shim, Min-Ho Kim, and Cheolsoo Sone "Asymmetry of carrier transport leading to efficiency droop in GaInN based light-emitting diodes" *Applied Physics Letters* **99**, 251115 (December 2011)
301. Qifeng Shan, David S. Meyaard, Qi Dai, Jaehee Cho, E. Fred Schubert, Joong Kon Son, and Cheolsoo Sone "Transport-mechanism analysis of the reverse leakage current in GaInN light-emitting diodes" *Applied Physics Letters* **99**, 253506 (December 2011)

2012

302. Di Zhu, Martin F. Schubert, Jaehee Cho, E. Fred Schubert, Mary H. Crawford, Daniel D. Koleske, Hyunwook Shim, and Cheolsoo Sone "Genetic algorithm for innovative device designs in high-efficiency III–V nitride light-emitting diodes" *Applied Physics Express* **5**, 012102 (January 2012)
303. David S. Meyaard, Qifeng Shan, Jaehee Cho, E. Fred Schubert, Sang-Heon Han, Min-Ho Kim, Cheolsoo Sone, Seung Jae Oh, and Jong Kyu Kim "Temperature dependent efficiency droop in GaInN light-emitting diodes with different current densities" *Applied Physics Letters* **100**, 081106 (February 2012)
304. Jong-In Shim, Dong-Pyo Han, Hyunsung Kim, Dong-Soo Shin, Guan-Bo Lin, David S. Meyaard, Qifeng Shan, Jaehee Cho, E. Fred Schubert, Hyunwook Shim, and Cheolsoo Sone "Efficiency droop in AlGaInP and GaInN light-emitting diodes" *Applied Physics Letters* **100**, 111106 (March 2012)
305. (**Invited**) Jaehee Cho and E. Fred Schubert "Light Emitting Diodes" in the *Encyclopedia of Optical Engineering* edited by R. G. Driggers and C. Hoffman (Taylor & Francis, New York, 2012)
306. Ashok K. Sood, Roger E. Welser, Adam W. Sood and Yash R. Puri, David Poxson, Jaehee Cho and E. Fred Schubert, Nibir K. Dhar, Martin B. Soprano, Raymond S. Balcerak "Development of nanostructure-based antireflection coatings for EO/IR sensors" *SPIE Photonics West Conference Proceedings*, Volume **8257**, paper 53 (April 2012)
307. Guan-Bo Lin, David Meyaard, Jaehee Cho, E. Fred Schubert, Hyunwook Shim, and Cheolsoo Sone "Analytic model for the efficiency droop in semiconductors with asymmetric carrier-transport properties based on drift-induced reduction of injection efficiency" *Applied Physics Letters* **100**, 161106 (April 2012)
308. Adam W. Sood, David J. Poxson, Frank W. Mont, Sameer Chhajed, Jaehee Cho, E. Fred Schubert, Roger E. Welser, Nibir K. Dhar, and Ashok K. Sood "Experimental and theoretical study of the optical and electrical properties of nanostructured indium tin oxide fabricated by oblique-angle deposition" *Journal of Nanoscience and Nanotechnology* **12**, 3950 (July 2012)
309. Ming Ma, Ahmed N. Noemaun, Jaehee Cho, E. Fred Schubert, Gi Bum Kim, and Cheolsoo Sone "Emission pattern control and polarized light emission through patterned graded-refractive-index coatings on GaInN light-emitting diodes" *Optics Express* **20**, 16677 (July 2012)
310. Ming Ma, David S. Meyaard, Qifeng Shan, Jaehee Cho, E. Fred Schubert, Gi Bum Kim, Min-Ho Kim, and Cheolsoo Sone "Polarized light emission from GaInN light-emitting diodes embedded with subwavelength aluminum wire-grid polarizers" *Applied Physics Letters* **101**, 061103 (August 2012)

Pictiva EX2054
Samsung v Pictiva
IPR2024-01094

311. Xing Yan, David J. Poxson, Jaehee Cho, Roger E. Welser, Ashok K. Sood, Jong Kyu Kim, and E. Fred Schubert "Enhanced omnidirectional photovoltaic performance of solar cells using multiple-discrete-layer tailored- and low-refractive index anti-reflection coatings" *Advanced Functional Materials* **2012**, 1 (September 2012)
312. Ming Ma, Jaehee Cho, E. Fred Schubert, Yongjo Park, Gi Bum Kim, and Cheolsoo Sone "Strong light-extraction enhancement in GaInN light-emitting diodes patterned with TiO_2 micro-pillars with tapered sidewalls" *Applied Physics Letters* **101**, 141105 (October 2012)

2013

313. Seung Jae Oh, Sameer Chhajed, David J. Poxson, Jaehee Cho, E. Fred Schubert, Sung Ju Tark, Donghwan Kim, and Jong Kyu Kim "Enhanced broadband and omni-directional performance of polycrystalline Si solar cells by using discrete multilayer antireflection coatings" *Optics Express* **21**, A157 (January 2013)
314. Jaehee Cho, E. Fred Schubert, and Jong Kyu Kim "Efficiency droop in light-emitting diodes: Challenges and countermeasures" *Laser and Photonics Reviews* 2012, **7**, 408 (January 2013)
315. David S. Meyaard, Guan-Bo Lin, Jaehee Cho, E. Fred Schubert, Hyunwook Shim, Sang-Heon Han, Min-Ho Kim, Cheolsoo Sone, and Young Sun Kim "Identifying the cause of the efficiency droop in GaInN light-emitting diodes by correlating the onset of high injection with the onset of the efficiency droop" *Applied Physics Letters* **102**, 251114 (June 2013)
316. Roger E. Welser, Adam W. Sood, Jaehee Cho, E. Fred Schubert, Jennifer L. Harvey, Nibir K. Dhar, Ashok K. Sood "Nanostructured Transparent Conductive Oxides for Photovoltaic Applications" *Materials Research Society Symposium Proceedings* **1493**, 23 (July 2013)
317. Seung Cheol Han, Jae-Kwan Kim, Jun Young Kim, Dong Min Lee, Jae-Sik Yoon, Jong-Kyu Kim, E. F. Schubert, and Ji-Myon Lee "Ohmic contacts to N-face p-type GaN using Ni/Au for the fabrication of polarization inverted light-emitting diodes" *Journal of Nanoscience and Nanotechnology* **13**, 5715 (August 2013)
318. Jun Hyuk Park, Dong Yeong Kim, Sunyong Hwang, David Meyaard, E. Fred Schubert, Yu Dae Han, Joo Won Choi, Jaehee Cho, Jong Kyu Kim "Enhanced overall efficiency of GaInN-based light-emitting diodes with reduced efficiency droop by Al-composition-graded AlGaN/GaN superlattice electron blocking layer" *Applied Physics Letters* **103**, 061104 (August 2013)
319. Seung Jae Oh, Gyeongmin Go, Jong-Lam Lee, E. Fred Schubert, Jaehee Cho, Jong Kyu Kim "Enhanced phosphor conversion efficiency of GaN-based white light-emitting diodes having dichroic-filtering contacts" *Journal of Materials Chemistry C*, **1**, 5733 (August 2013)
320. Guan-Bo Lin, Dong-Yeong Kim, Qifeng Shan, Jaehee Cho, E. Fred Schubert, Hyunwook Shim, Cheolsoo Sone, and Jong Kyu Kim "Effect of Quantum Barrier Thickness in the Multiple-Quantum-Well Active Region of GaInN / GaN Light-Emitting Diodes" *IEEE Photonics Journal* **5**, 1600207 (August 2013)
321. David S. Meyaard, Jaehee Cho, E. Fred Schubert, Sang-Heon Han, Min-Ho Kim, and Cheolsoo Sone "Analysis of the temperature dependence of the forward voltage characteristics of GaInN light-emitting diodes" *Applied Physics Letters* **103**, 121103 (September 2013)
322. David S. Meyaard, Guan-Bo Lin, Ming Ma, Jaehee Cho, E. Fred Schubert, Sang-Heon Han, Min-Ho Kim, HyunWook Shim, and Young Sun Kim "GaInN light-emitting diodes using separate epitaxial growth for the p-type region to attain polarization-inverted electron-blocking layer, reduced electron leakage, and improved hole injection" *Applied Physics Letters* **103**, 201112 (November 2013)
323. Ming Ma, Jaehee Cho, E. Fred Schubert, Gi Bum Kim, and Cheolsoo Sone "Optically functional surface structures for GaN-based light-emitting diodes" *Journal of Materials Chemistry C*, **1**, 8134 (November 2013)
324. Hee-Dong Kim, Ho-Myoung An, Kyoung Heon Kim, Su Jin Kim, Chi Sun Kim, Jaehee Cho, E. Fred Schubert, and Tae Geun Kim "A universal method of producing transparent electrodes using wide-bandgap materials" *Advanced Functional Materials* DOI: 10.1002/adfm.201301697 (November 2013)

2014

325. Hyunah Kwon, Juyoung Ham, Dong Yeong Kim, Seung Jae Oh, Subin Lee, Sang Ho Oh, E. Fred Schubert, Kyung-Geun Lim, Tae-Woo Lee, Sungjun Kim, Jong-Lam Lee, and Jong Kyu Kim "Organic Solar Cells: Three-dimensional nanostructured indium-tin-oxide electrodes for enhanced performance of bulk heterojunction organic solar cells" *Advanced Energy Materials* 1301566 (January 2014)
326. David S. Meyaard, Ming Ma, E. Fred Schubert, Chel-Jong Choi, Jaehee Cho, and Morgan Evans "Mesa-free III-V nitride light-emitting diodes with flat surface" *ECS Solid-State Letters* **3**, Q17 (February 2014)
327. Ming Ma, E. Fred Schubert, Jaehee Cho, Morgan Evans, Gi Bum Kim and Cheolsoo Sone "Fabrication of tapered graded-refractive-index micropillars using ion-implanted-photoresist as an etch mask" *Journal of Vacuum Science and Technology* A **32**, 021305-1 (March 2014)

Pictiva EX2054
Samsung v Pictiva
IPR2024-01094

328. Seung Hee Lee, Ho Jin, Dong-Yeong Kim, Kyung Song, Sang Ho Oh, Sungjee Kim, E. Fred Schubert, and Jong Kyu Kim "Enhanced power conversion efficiency of quantum dot sensitized solar cells with near single-crystalline TiO_2 nano-helixes used as photoanodes" *Optics Express* **22**, A868 (April 2014)
329. Seung Hee Lee, Jeong Kwon, Dong Yeong Kim, Kyung Song, Sang Ho Oh, Jaehee Cho, E. Fred Schubert, Jong Hyeok Park, Jong Kyu Kim "Enhanced power conversion efficiency of dye-sensitized solar cells with multifunctional photoanodes based on a three-dimensional TiO_2 nanohelix array" *Solar Energy Materials & Solar Cells* **132**, 47 (August 2014)
330. Michael E Coltrin, Andrew M Armstrong, Igal Brener, Weng W Chow, Mary H Crawford, Arthur J Fischer, David F Kelley, Daniel D Koleske, Lincoln J Lauhon, James E Martin, May D Nyman, E Fred Schubert, Lauren E Shea-Rohwer, Ganapathi S Subramania, Jeffrey Y Tsao, George T Wang, Jonathan J Wierer, Jr, Jeremy B Wright "The Energy Frontier Research Center for Solid-State Lighting Science: Exploring New Materials Architectures and Light Emission Phenomena" *The Journal of Physical Chemistry C* **118**, 13330 (April 2014)
331. Keith Goossen, Daniel Wolfe, E. Fred Schubert, Dan Kilper, and Ursula Keller "Negawatts – Optics, Photonics and Energy Savings" *Optics and Photonics News*, November issue, page 34, (November 2014)
332. Guan-Bo Lin, Qifeng Shan, Yaqi Wang, Ting Li, and E. Fred Schubert " "U-turn" feature in the efficiency-versus-current curve of GaInN / GaN light-emitting diodes" *Applied Physics Letters* **105**, 221116 (December 2014)

2015

333. Jaehee Cho, David S. Meyaard, Ming Ma, and E. Fred Schubert "GaInN-based light emitting diodes embedded with wire grid polarizers" *Japanese Journal of Applied Physics* **54**, 02BB02 (January 2015)
334. Dong Yeong Kim, Guan-Bo Lin, Sunyong Hwang, Jun Hyuk Park, David Meyaard, E. Fred Schubert, Han-Youl Ryu, and Jong Kyu Kim "Polarization-engineered high-efficiency GaInN light-emitting diodes optimized by genetic algorithm" *IEEE Photonics Journal* **7**, 1300209 (February 2015)
335. D. Y. Kim, J. H. Park, J. W. Lee, S. Y. Hwang, S. J. Oh, J. S. Kim, C. Sone, E. F. Schubert, and J. K. Kim (2015) "Overcoming the fundamental limitation in light-extraction efficiency of Deep-UV LEDs by utilizing transverse-magnetic-dominant emission" *Light: Science & Applications* **4***, e263;* doi:10.1038/lsa.2015.36 (May 2015)
336. Jun Hyuk Park, Guan-Bo Lin, Dong Yeong Kim, Jong Won Lee, Jaehee Cho, Jungsub Kim, Jinsub Lee, Yong-Il Kim, Youngsoo Park, E. Fred Schubert, and Jong Kyu Kim "Distinct U-shape efficiency-versus-current curves in AlGaN-based deep-ultraviolet light-emitting diodes" *Optics Express* **23**, 15398 (June 2015)
337. Ashok K. Sood, Gopal Pethuraja, Roger E. Welser and Yash R. Puri, Nibir K. Dhar, Priyalal S. Wijewarnasuriya, Jay Lewis, Harry Efstathiadis, Pradeep Haldar, and E. Fred Schubert "Development of large area nanostructured antireflection coatings for EO/IR sensor applications" *International Journal of NanoScience and Nanotechnology*, Volume **6**, Number 2, pp. 57-70 (August 2015)
338. Ashok K. Sood, Roger E. Welser, Gopal G. Pethuraja, Adam W. Sood, Yash R. Puri, E. Fred Schubert, Pradeep Haldar, Nibir K. Dhar, Dennis L. Polla, and Priyalal Wijewarnasuriya "Nanostructured anti-reflection (AR) coatings for optoelectronic applications" published in: *Comprehensive Guide for Nanocoatings Technology*, Volume **4**, Editor: Mahmood Aliofkhazraei, ISBN-13 978-1-63482-648-8 (Nova Science Publishers Inc., Hauppauge, New York, USA, November 2015)
339. E. Fred Schubert, Jaehee Cho, and Jong Kyu Kim "Light Emitting Diodes" published in: *Kirk-Othmer Encyclopedia of Chemical Technology*; on-line access at < http://onlinelibrary.wiley.com/book/10.1002/0471238961 > ISBN: 9780471238966 DOI: 10.1002/0471238961 (John Wiley and Sons and Wiley Inter-Science, New York NY, December 2015)
340. Guan-Bo Lin and E. Fred Schubert "Efficiency re-climbing in high-current droop regime for gallium-nitride-based light-emitting diodes" *International Journal of High-Speed Electronics and Systems*, *World Scientific Publishing Company* **24**, 1520008 (December 2015)
341. E. F. Schubert "Physical Foundations of Solid-State Devices" (author), eBook, 275 pages, 2015 Edition, ISBN-13: 978-0-9863826-2-8 (Google Books, Mountain View CA, 2015)

2016

342. E. Fred Schubert, Jaehee Cho, and Jong Kyu Kim "Light Emitting Diodes" published in: *Reference Module in Materials Science and Materials Engineering*, Section on Light Emitting Diodes, Materials Science and Materials Engineering, Edited by Saleem Hashmi (Elsevier Publishing Company, Amsterdam, 2016) < https://www.sciencedirect.com/science > (January 2016)
343. Kyurin Kim, Jun Hyuk Park, Hyunsoo Kim, Jong Kyu Kim, E. Fred Schubert, and Jaehee Cho "Energy bandgap variation in oblique angle-deposited indium tin oxide" *Applied Physics Letters* **108**, 041910 (January 2016)

Pictiva EX2054
Samsung v Pictiva
IPR2024-01094

344. Jun Hyuk Park, Jong Won Lee, Dong Yeong Kim, Jaehee Cho, E. Fred Schubert, Jungsub Kim, Jinsub Lee, Yong-Il Kim, Youngsoo Park, and Jong Kyu Kim "Variation of the external quantum efficiency with temperature and current density in red, blue, and deep ultraviolet light-emitting diodes" *Journal of Applied Physics* **119**, 023101 (January 2016)
345. JongWon Lee, Dong Yeong Kim, Jun Hyuk Park, E. Fred Schubert, Jungsub Kim, Jinsub Lee, Yong-Il Kim, Youngsoo Park, and Jong Kyu Kim "An elegant route to overcome fundamentally-limited light extraction in AlGaN deep-ultraviolet light-emitting diodes: Preferential outcoupling of strong in-plane emission" *Scientific Reports* **6**, 22537 (March 2016)

2017

346. Jaehee Cho, Jun Hyuk Park, Jong Kyu Kim, and E. Fred Schubert "White light-emitting diodes: History, progress, and future" *Laser and Photonics Review*, 1600147 (2017) / DOI 10.1002/lpor.201600147 (March 2017)
347. Jun Hyuk Park, Jaehee Cho, E. Fred Schubert, and Jong Kyu Kim "The effect of imbalanced carrier transport on the efficiency droop in GaInN-based blue and green light-emitting diodes" *Energies* **10**, 1277 (2017) DOI: 10.3390/en10091277 (August 2017)

2018

348. E. Fred Schubert "Light Emitting Diodes, 3rd Edition" Book, 672 pages, with hundreds of colored figures ISBN: 978-0-9 863826-6-6 (Google Books, Mountain View CA, 2018)
349. JH Park, DY Kim, EF Schubert, J Cho, JK Kim "Fundamental Limitations of Wide-Bandgap Semiconductors for Light-Emitting Diodes" *ACS Energy Letters* **3**, 655-662 (2018)

2020

350. Bhishma Pandit, E. Fred Schubert and Jaehee Cho "Dual-functional ultraviolet photodetector with graphene electrodes on AlGaN/GaN heterostructure" *Nature Research – Scientific Reports* **10**, 22059 (2020)

2022

351. E. F. Schubert "Physical Foundations of Solid-State Devices" (author), eBook, 318 pages, 2022 Edition, ISBN-13: 978-0-9863826-2-8 (Google Books, Mountain View CA, 2022)

2024

352. Yung Ryel Ryu, Sung Ki Hong, E Fred Schubert, Dong-Min Jeon, Dong-Soo Shin, Jong-In Shim, Sang-Mook Kim, Jong Hyeob Baek "A next-generation light-emitting device: ZOGAN LED with a heterogeneous p-layer composed of oxide and nitride semiconductors" *AIP Advances* (AIP Publishing), Volume **14**, Issue 4 (2024)

Pictiva EX2054
Samsung v Pictiva
IPR2024-01094