US 20030159910A1

(19) United States

(12) Patent Application Publication

(10) Pub. No.: US 2003/0159910 A1

(43) Pub. Date: Aug. 28, 2003

Caldwell

(54) INTEGRATED TOUCH SENSOR AND LIGHT APPARATUS

(76) Inventor: **David W. Caldwell**, Holland, MI (US)

Correspondence Address:
JENNER & BLOCK, LLC
ONE IBM PLAZA
CHICAGO, IL 60611 (US)

(21) Appl. No.: 10/271,438

(22) Filed: Oct. 15, 2002

Related U.S. Application Data

(60) Provisional application No. 60/334,040, filed on Nov. 20, 2001. Provisional application No. 60/341,350, filed on Dec. 18, 2001.

Publication Classification

(51) Int. Cl.[7] H01H 9/00

(52) U.S. Cl. 200/310

(57) **ABSTRACT**

A touch sensor is physically integrated with a light emitting device to provide a switching device with built-in backlighting. In some embodiments, the touch sensor and the light emitting device share electrical components.

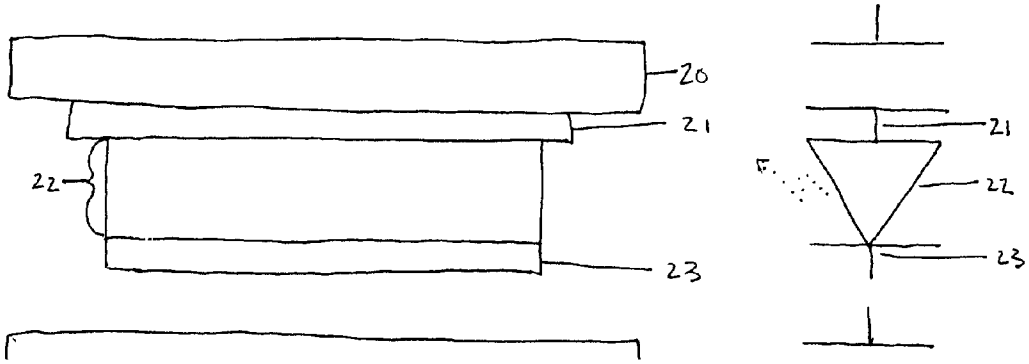

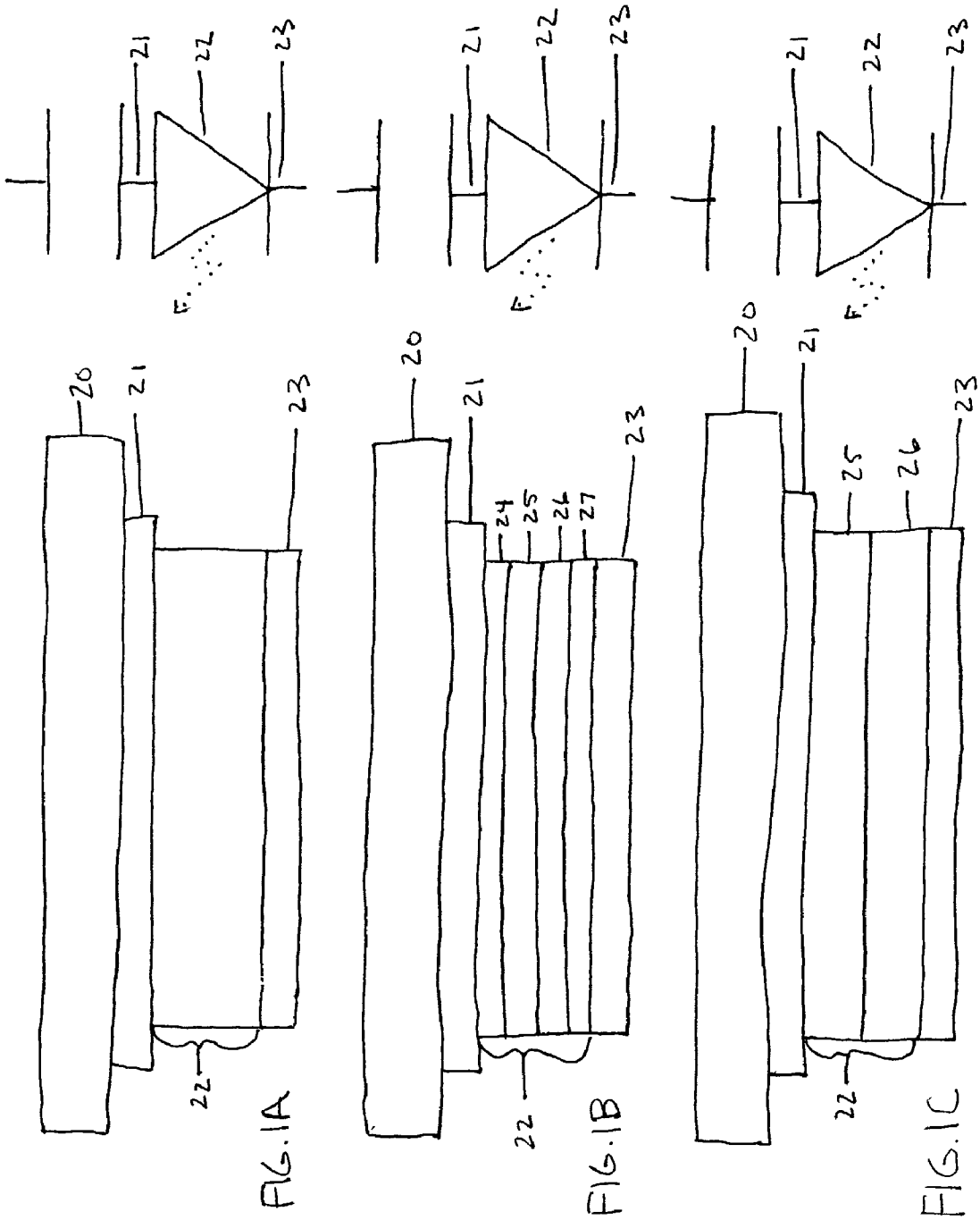
20
21
22
23
FIG.1A
20
21
22
23
24
25
26
27
FIG.1B
20
21
22
23
25
26
FIG.1C

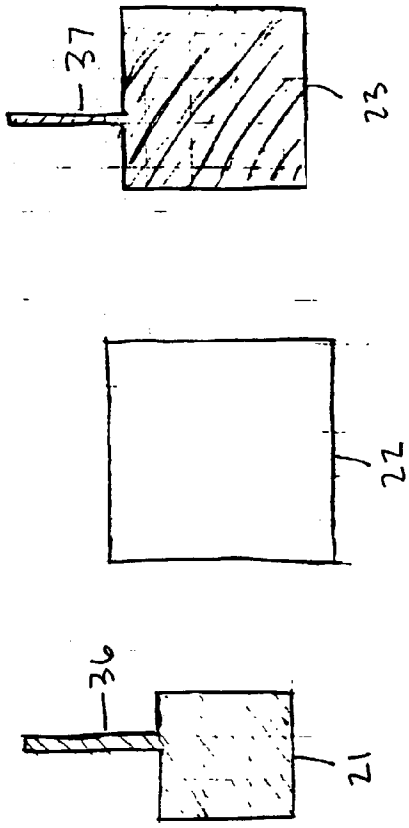

FIG. 2A

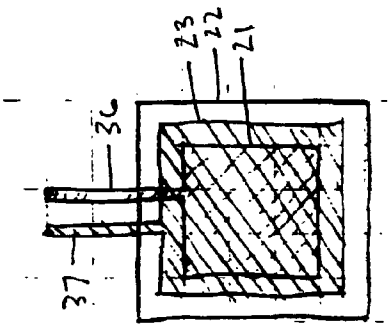

FIG. 2B

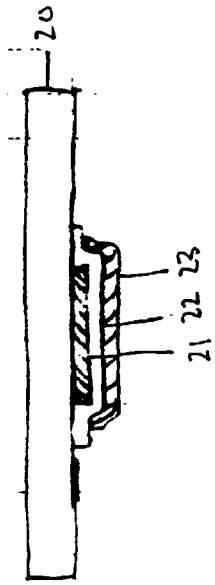

FIG. 2C

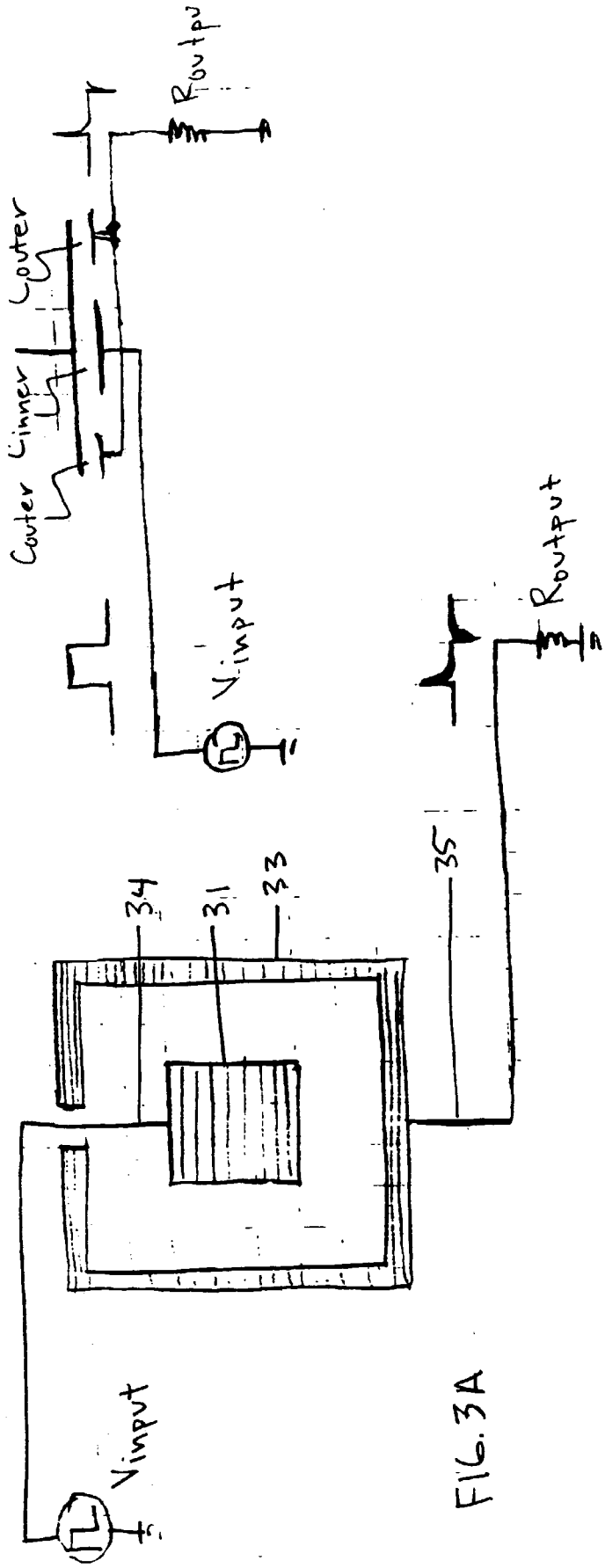
Routpu
Couter
Cinner
Couter
Vinput
Routput
34
31
33
35
Vinput

FIG. 3A

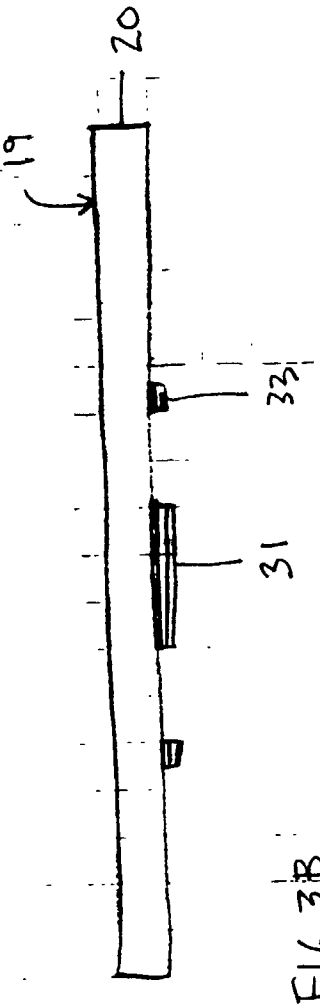
20
19
33
31

FIG. 3B

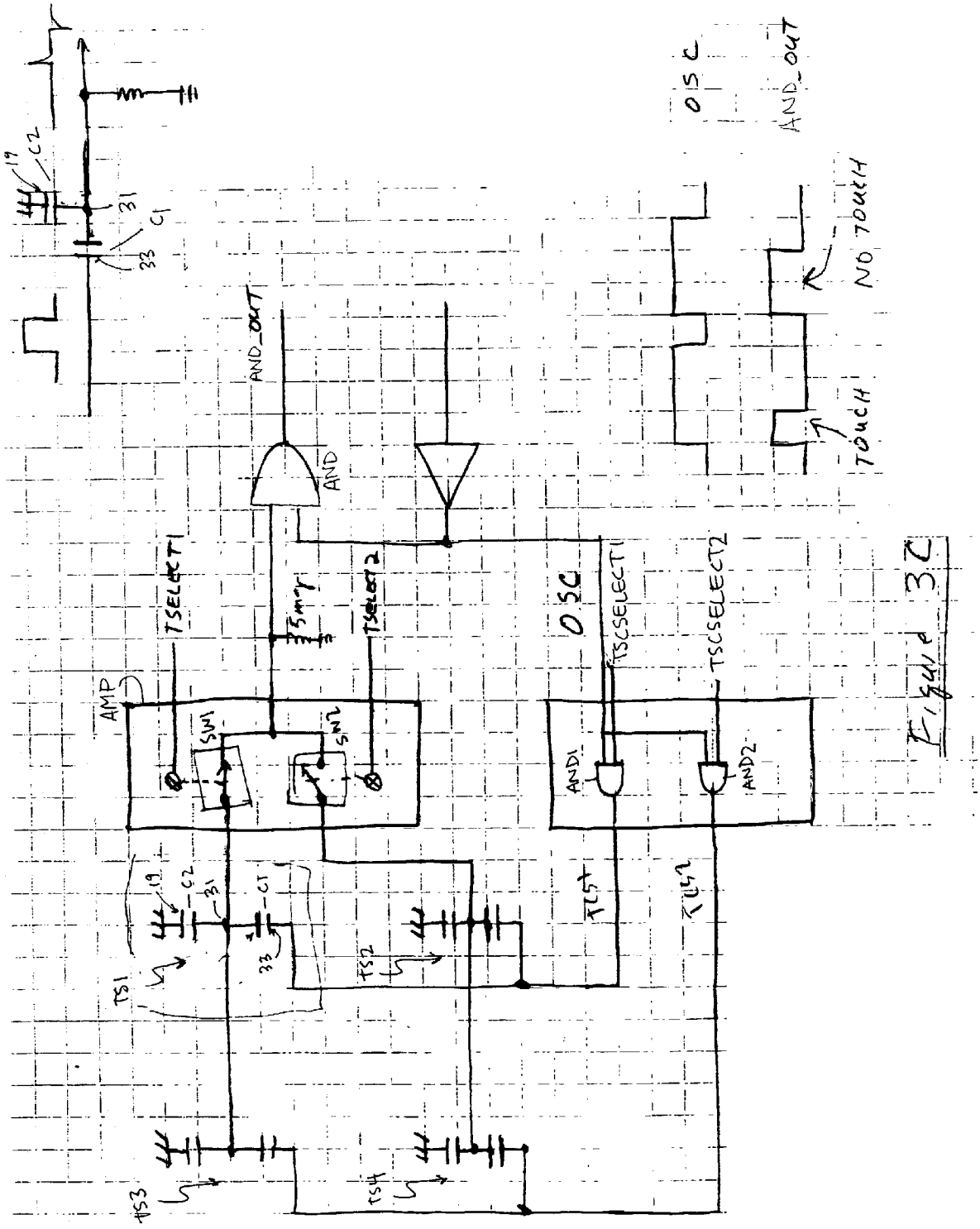
OSC
AND_OUT
NO TOUCH
TOUCH
AND_OUT
AND
TSELECT1
TSELECT2
AMP
SW1
SW2
OSC
TSCSELECT1
TSCSELECT2
AND1
AND2
TS1
TS2
TS3
TS4
C1
C2
19
31
33

Figure 3C

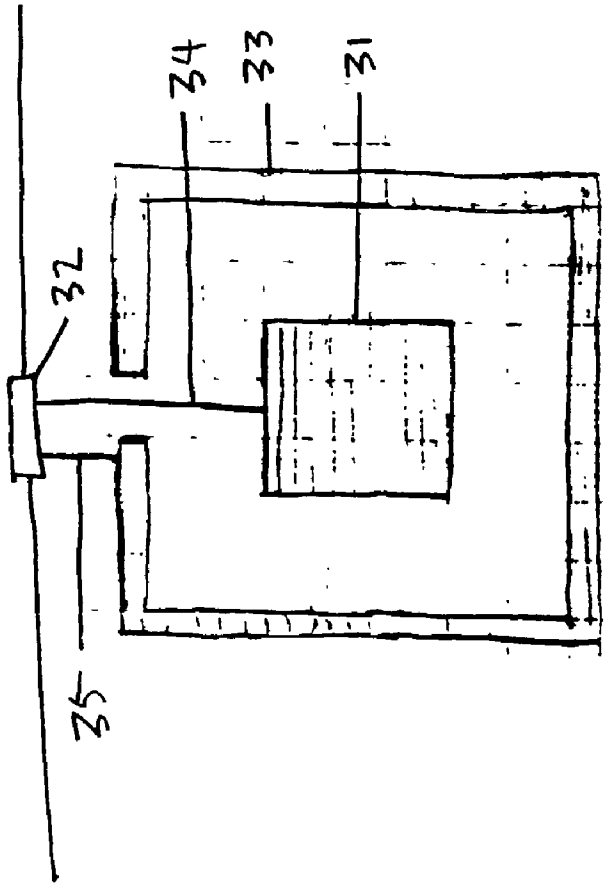

FIG. 4A

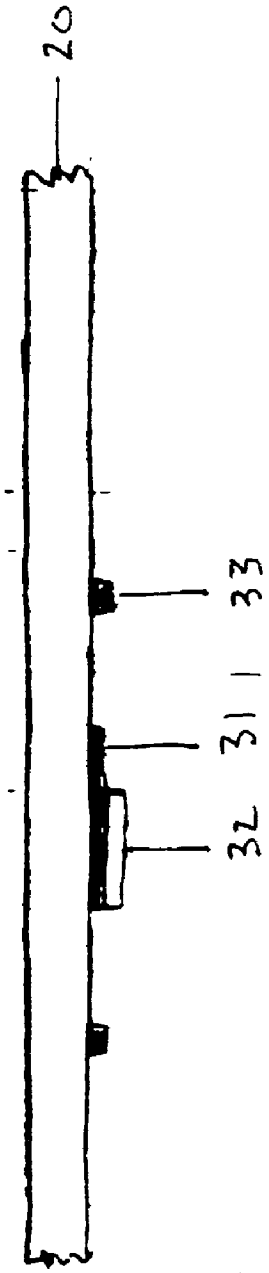

FIG. 4B

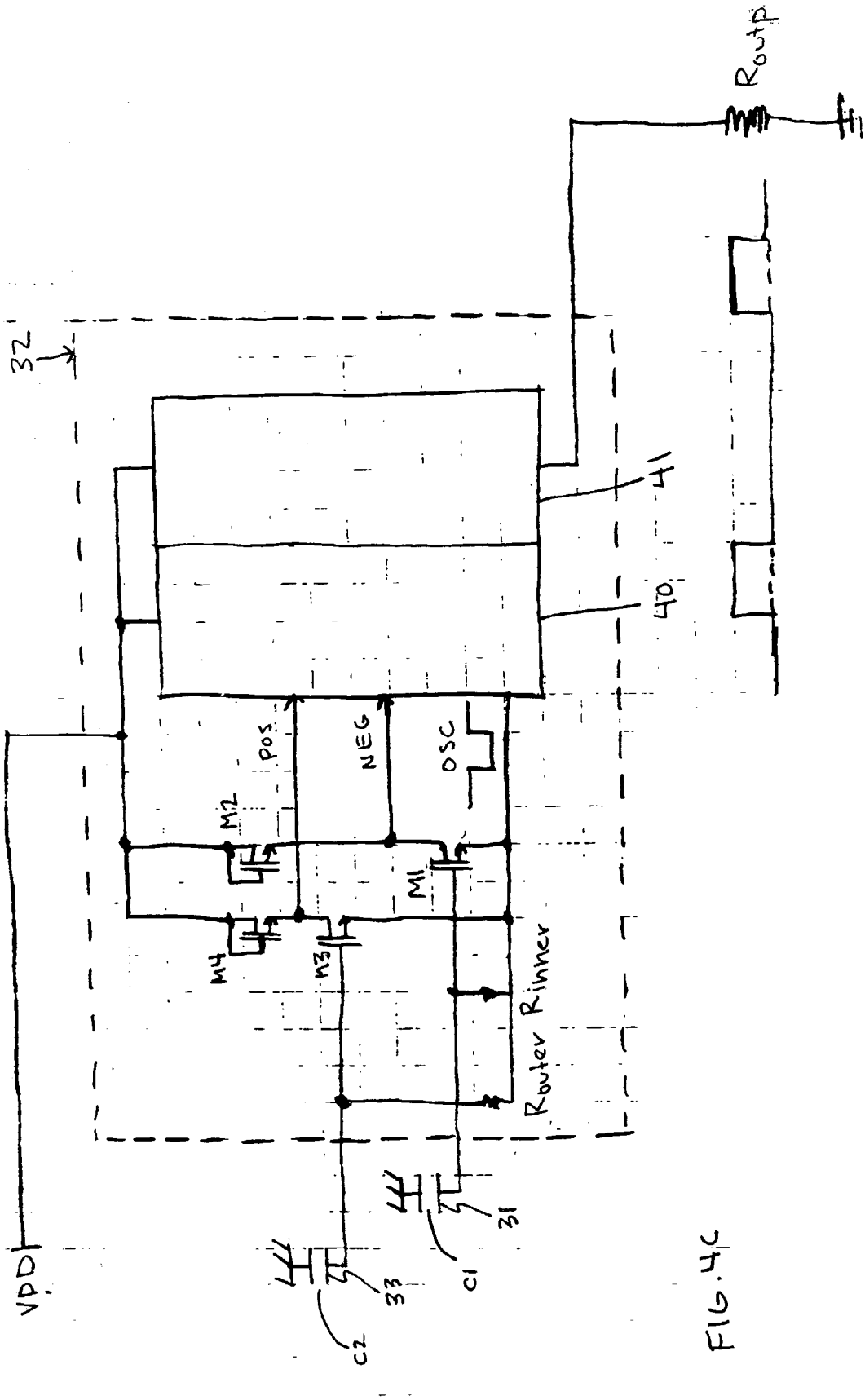
Routp
32
41
40
POS
NEG
OSC
M2
M1
M4
M3
Router Rinner
VDD
C2
33
C1
31

FIG. 4C

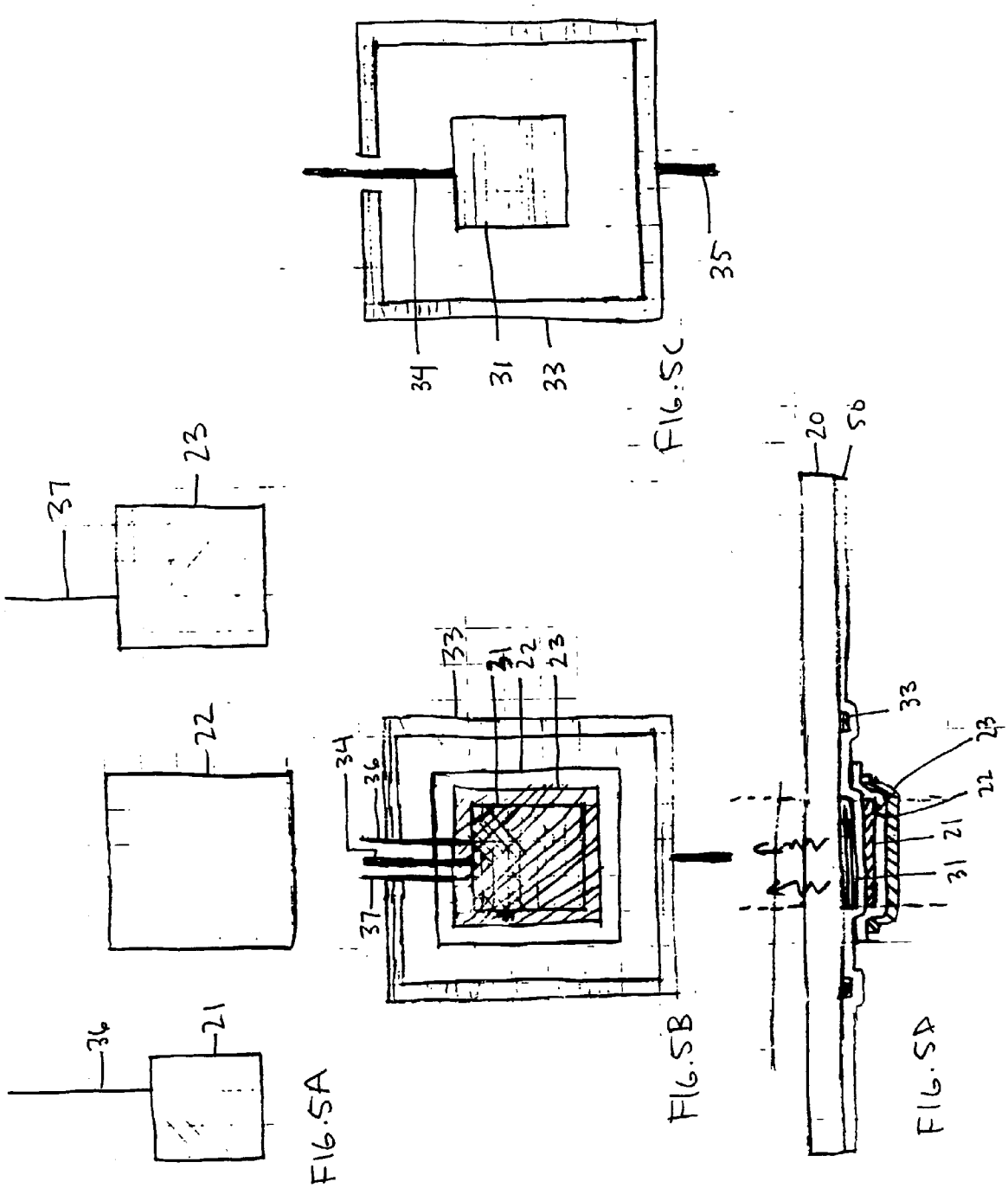
34
31
33
35
FIG.5C
37
23
22
36
21
FIG.5A
33
31
22
23
34
36
37
FIG.5B
20
56
33
23
22
21
31
FIG.5A

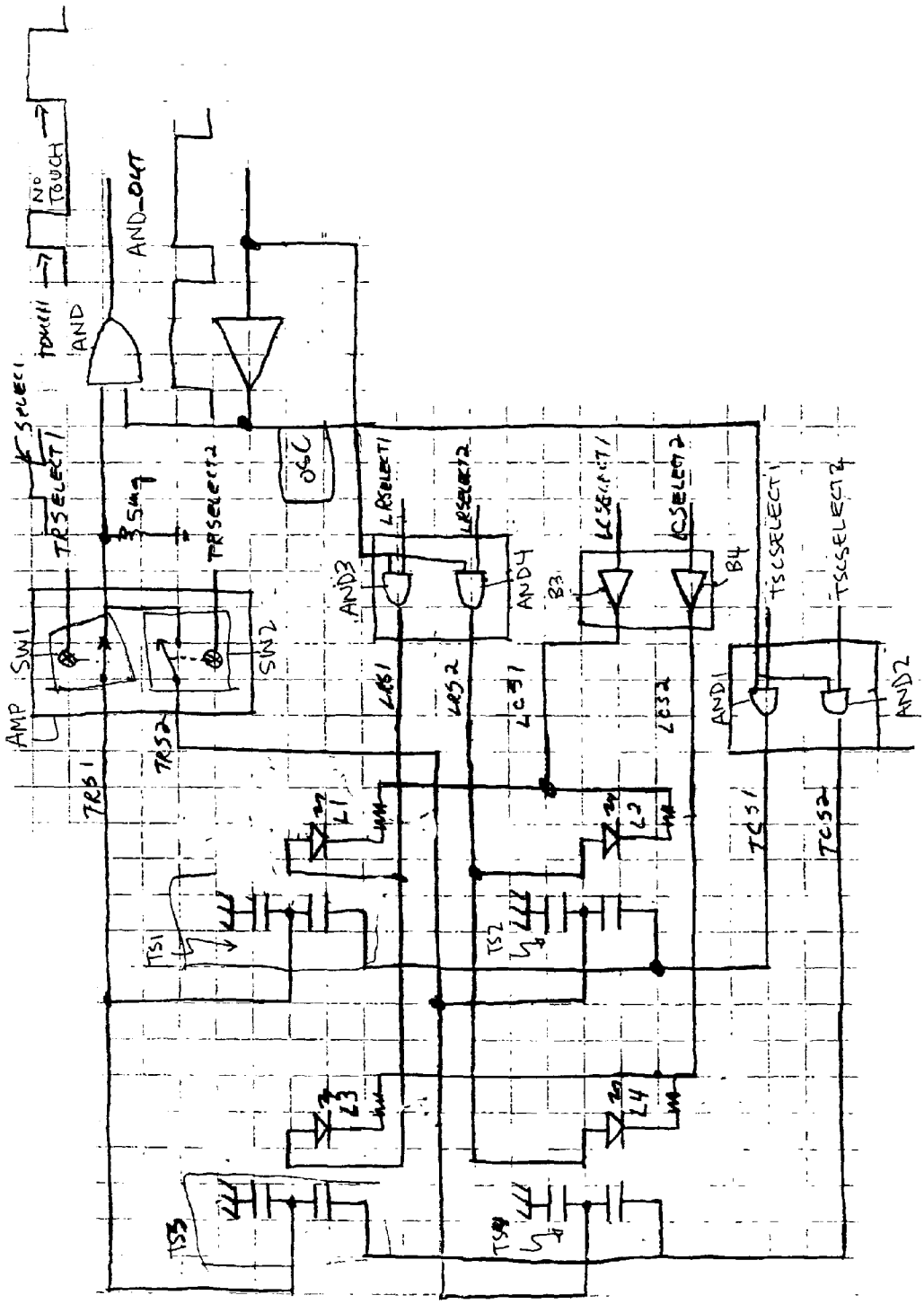
NO TOUCH
AND_OUT
touch
AND
K SELECT
TRSELECT1
SW1
TRSELECT2
SW2
AMP
TRS1
TRS2
OSC
LRSELECT1
LRSELECT2
AND3
AND4
LCSELECT1
RCSELECT2
B3
B4
LRS1
LRS2
LCS1
LCS2
TSCSELECT1
TSCSELECT2
AND1
AND2
TCS1
TCS2
L1
L2
L3
L4
TS1
TS2
TS3
TS4

Figure 5E

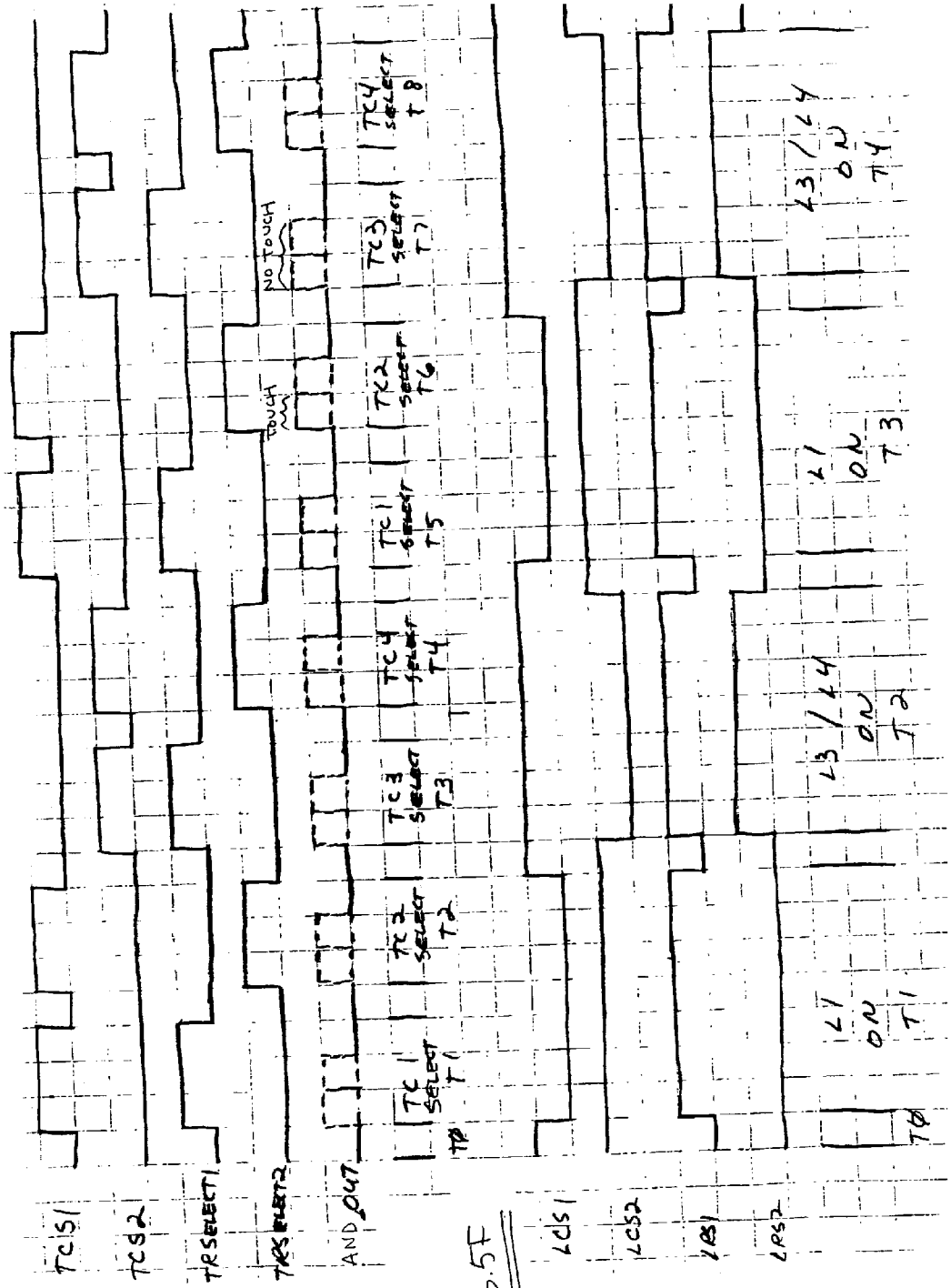
TCS1
TCS2
TRSELECT1
TRSELECT2
AND_OUT
TOUCH
NO TOUCH
TC1 SELECT T1
TC2 SELECT T2
TC3 SELECT T3
TC4 SELECT T4
TC1 SELECT T5
TC2 SELECT T6
TC3 SELECT T7
TC4 SELECT T8
T0
LCS1
LCS2
LRS1
LRS2
L1 ON T1
L3 / L4 ON T2
L1 ON T3
L3 / L4 ON T4

FIG.5F

FIG.5G

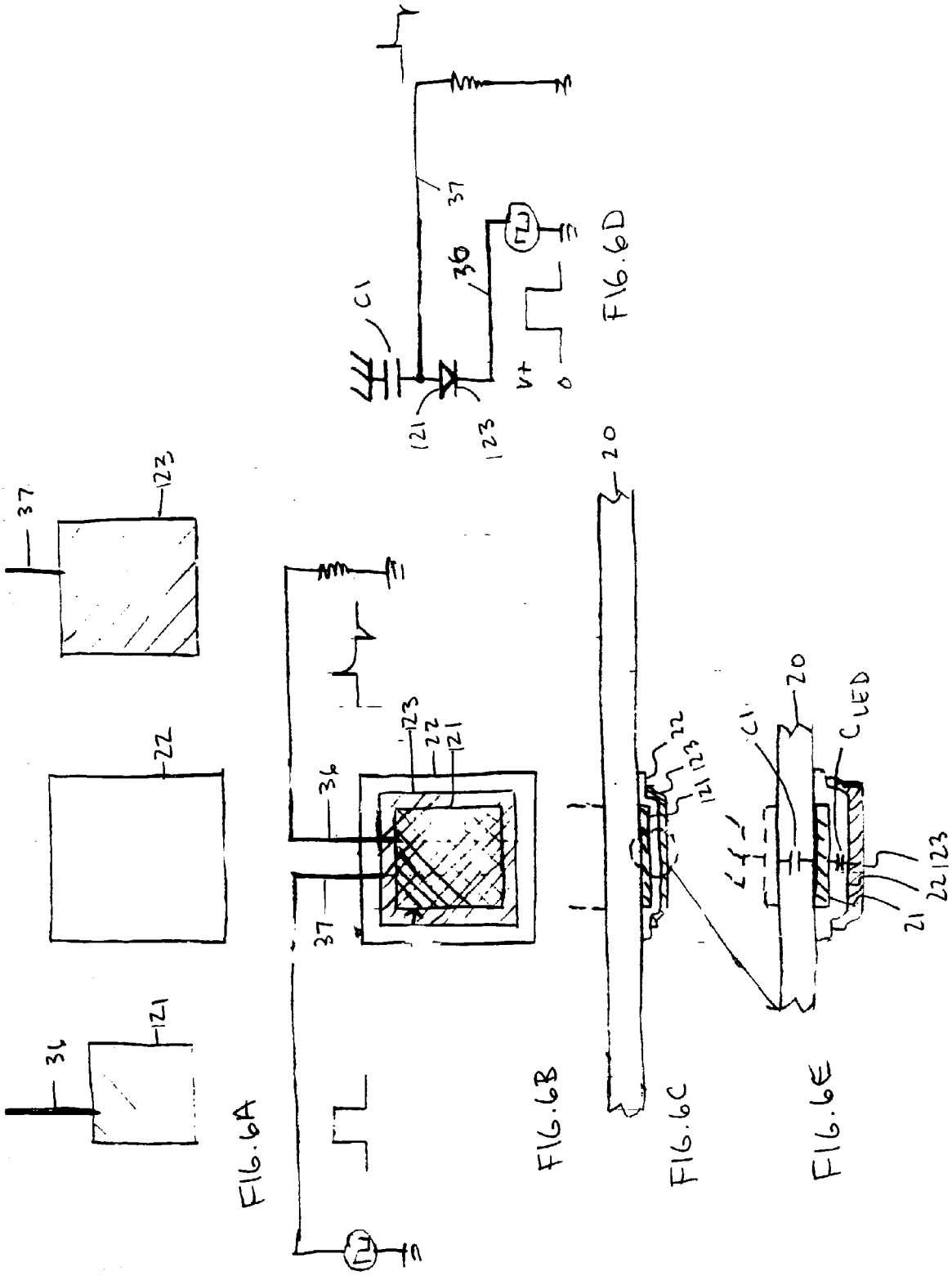
FIG. 6A
FIG. 6B
FIG. 6C
FIG. 6D
FIG. 6E
V+
C1
C LED

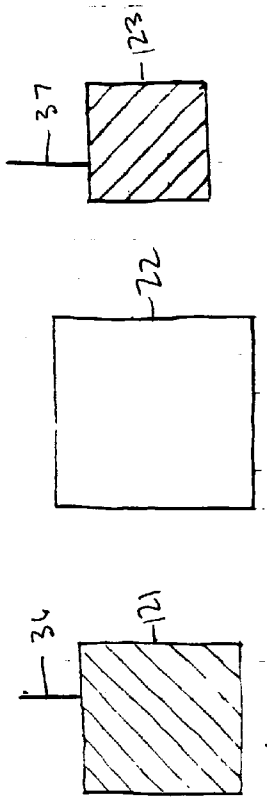

FIG.7A

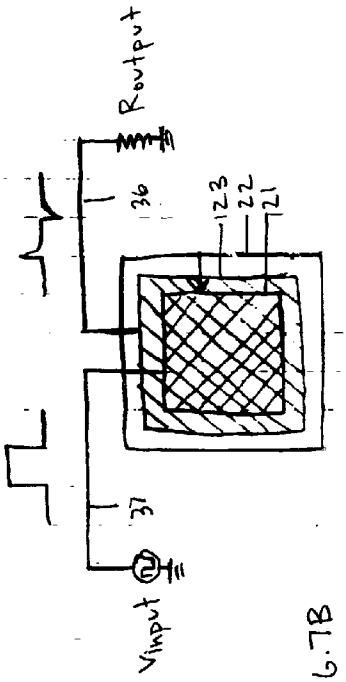

FIG.7B

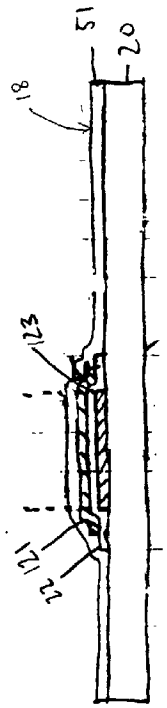

FIG.7C

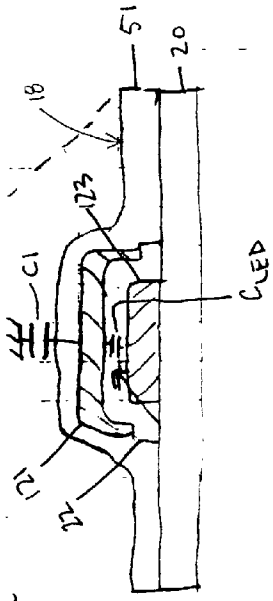

FIG.7D

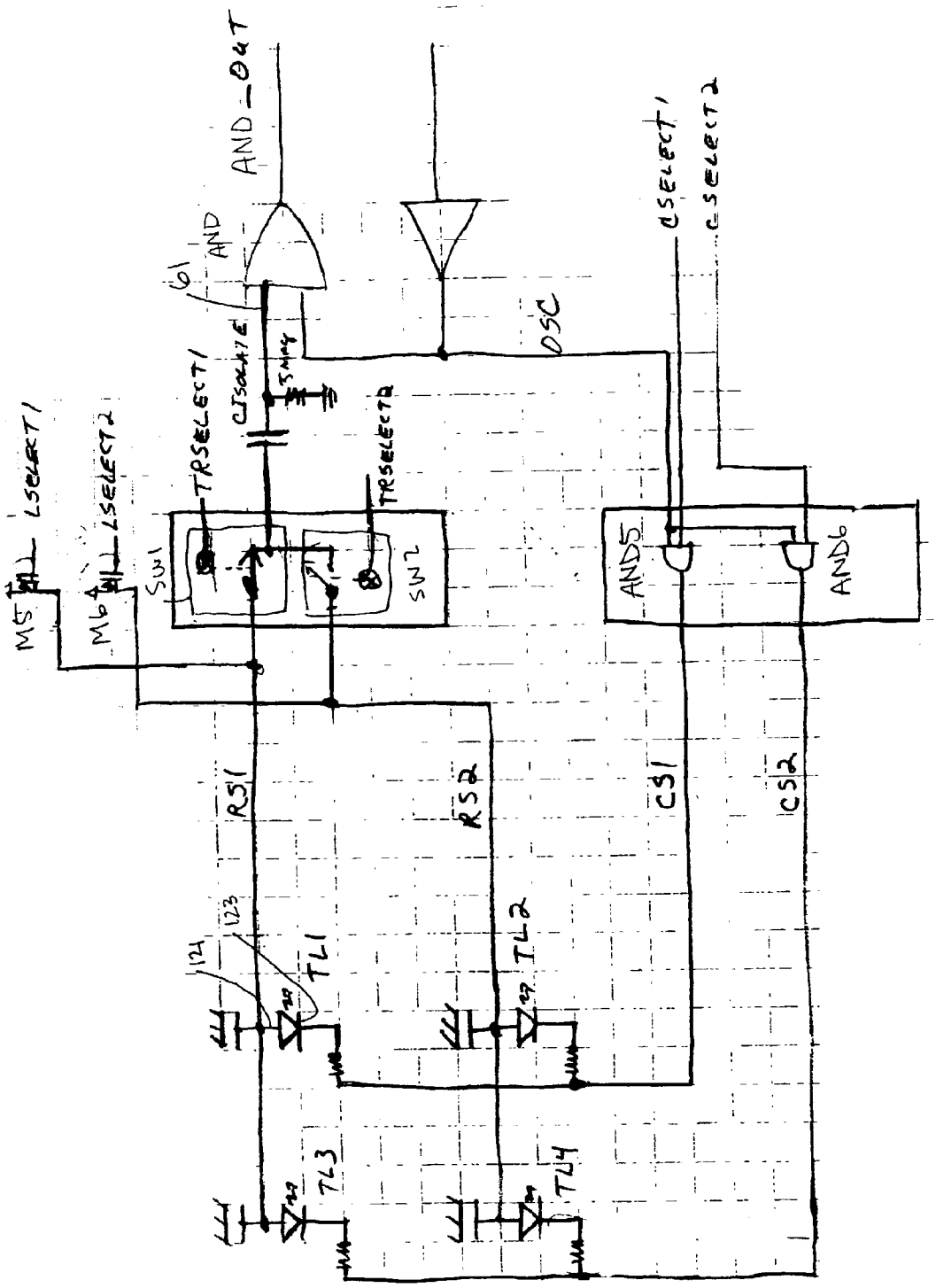
AND_OUT
AND
61
CISOLATE
TRSELECT1
TRSELECT2
LSELECT1
LSELECT2
M5
M6
SW1
SW2
OSC
CSELECT1
CSELECT2
AND5
AND6
RS1
RS2
CS1
CS2
TL1
TL2
TL3
TL4
121
123

FIG. 8A

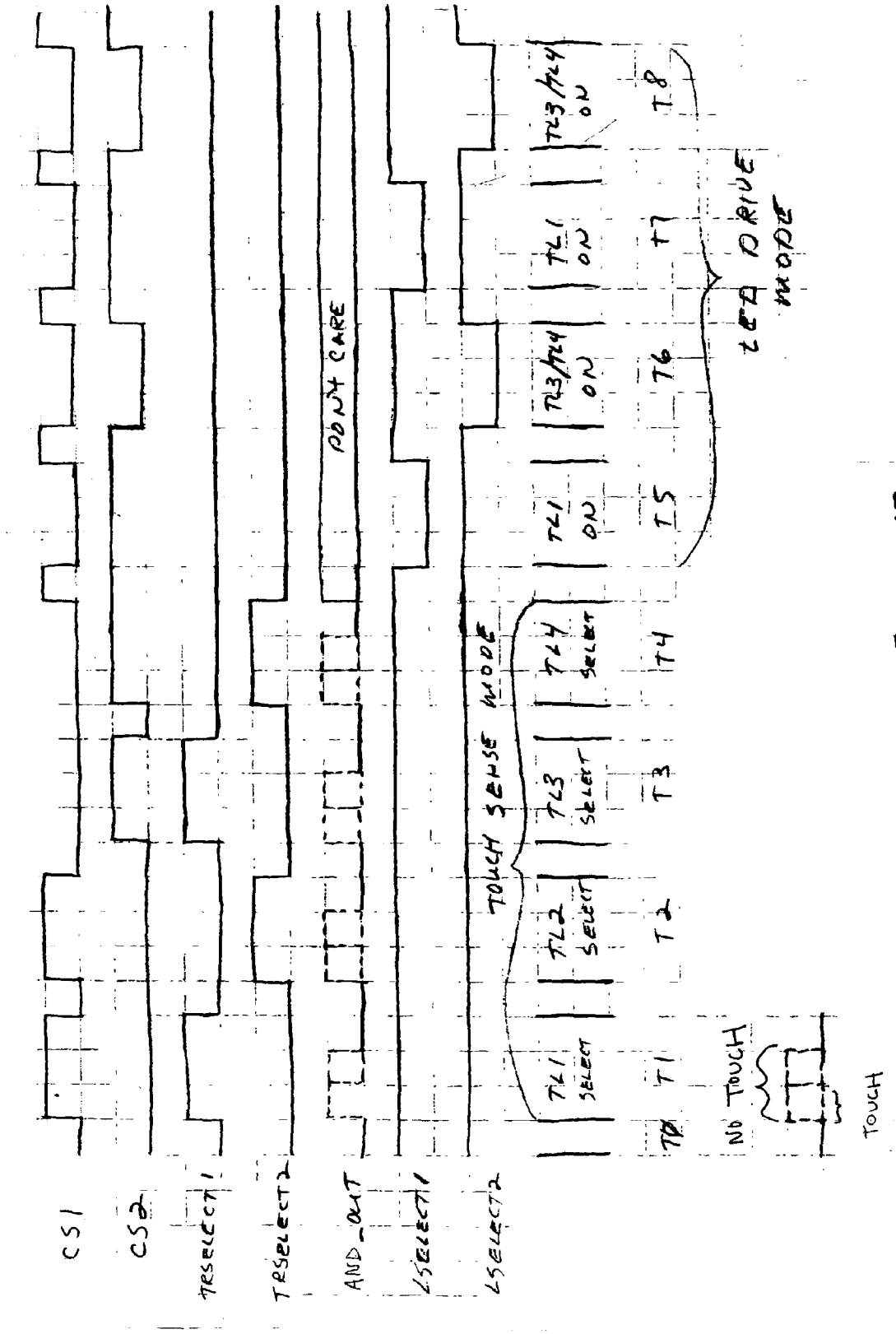
CS1
CS2
TRSELECT1
TRSELECT2
AND_OUT
LSELECT1
LSELECT2
DON'T CARE
TOUCH SENSE MODE
TL1 SELECT
TL2 SELECT
TL3 SELECT
TL4 SELECT
TL1 ON
TL3/TL4 ON
TL1 ON
TL3/TL4 ON
T0
T1
T2
T3
T4
T5
T6
T7
T8
ZERO DRIVE MODE
NO TOUCH
TOUCH

Figure 8B

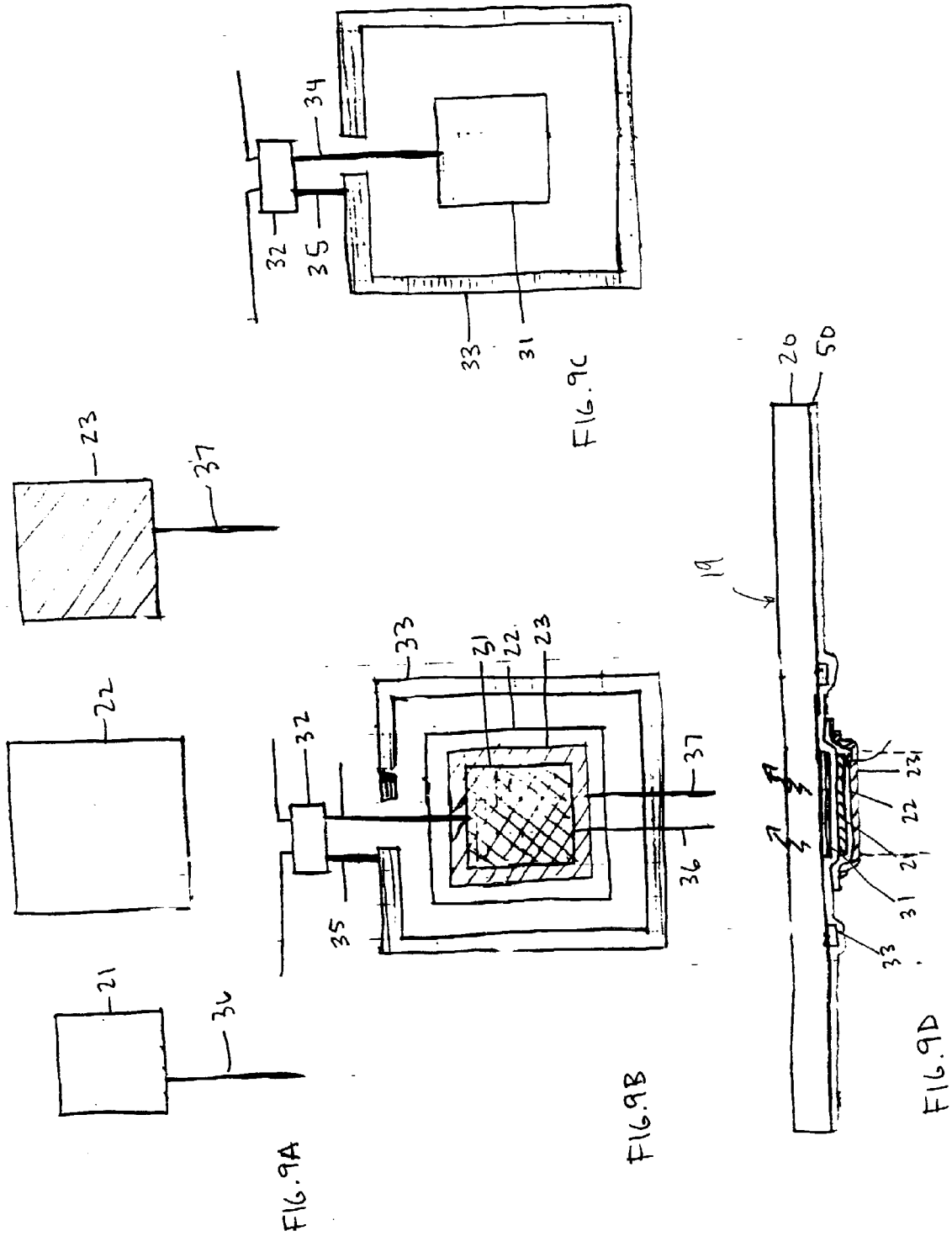

FIG. 9A

FIG. 9B

FIG. 9C

FIG. 9D

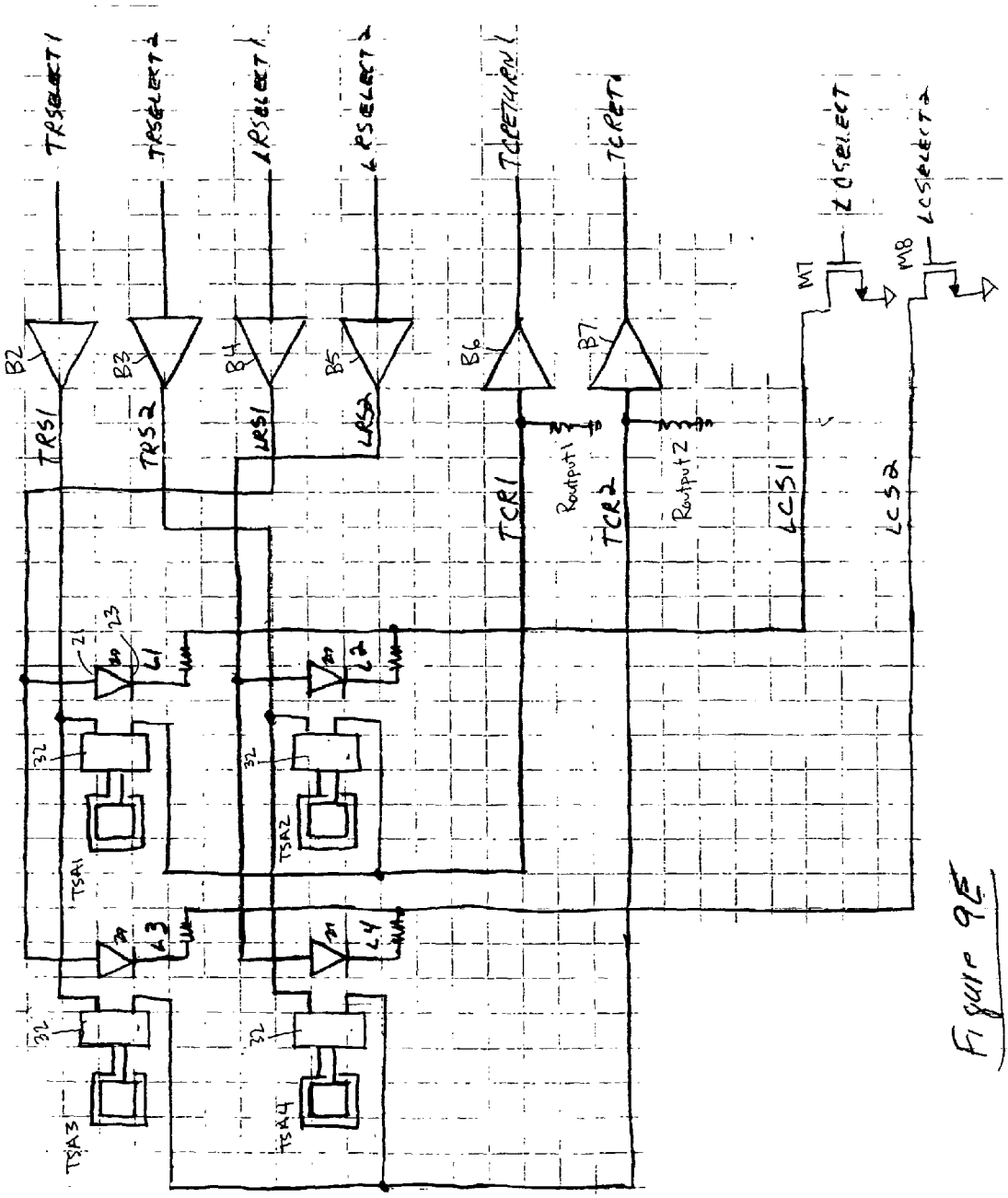
TRSELECT1
TRSELECT2
LRSELECT1
LRSELECT2
TCRETURN1
TCRET1
LCSELECT1
LCSELECT2
B2
B3
B4
B5
B6
B7
M7
M8
TRS1
TRS2
LRS1
LRS2
TCR1
TCR2
Routput1
Routput2
LCS1
LCS2
L1
L2
L3
L4
TSA1
TSA2
TSA3
TSA4
32
23

Figure 9E

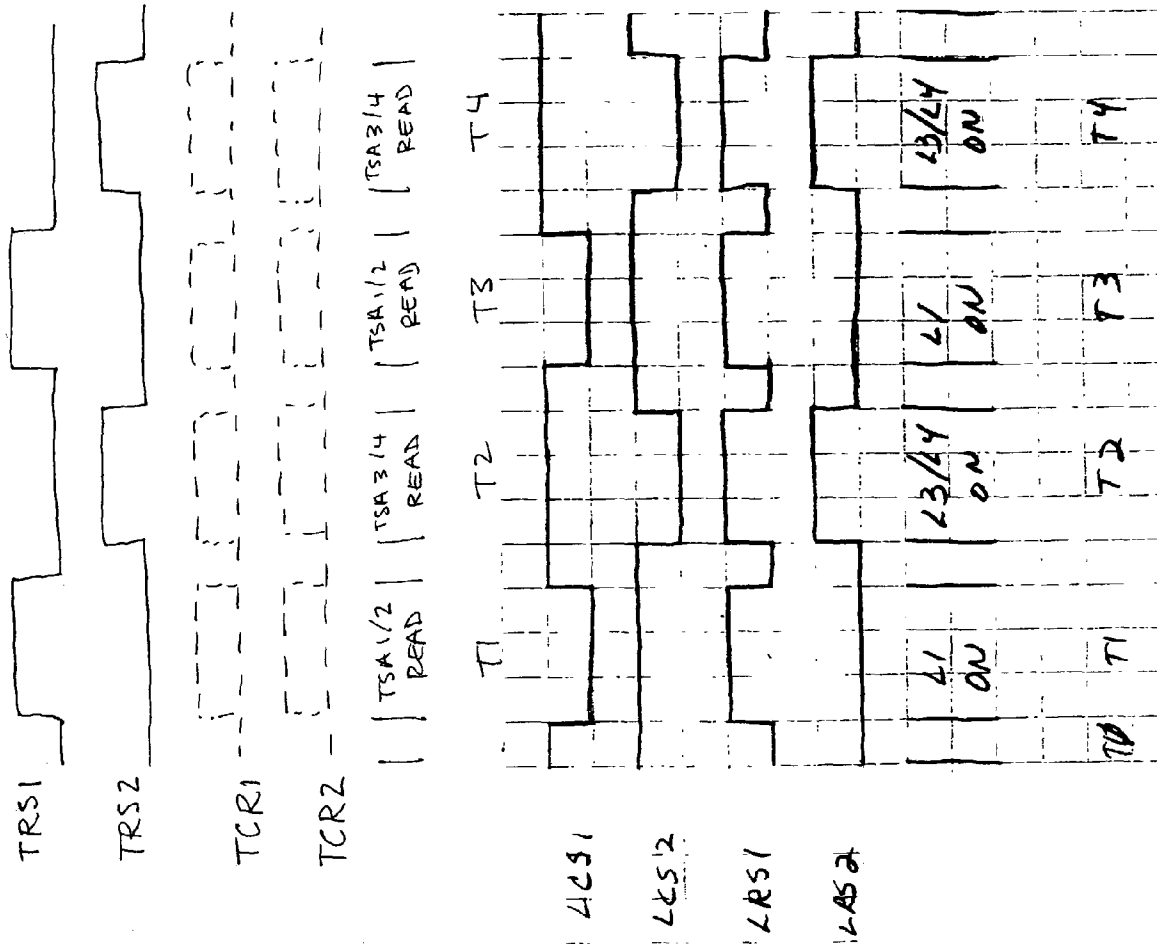
TRS1
TRS2
TCR1
TCR2
TSA 1/2 READ
TSA 3/4 READ
TSA 1/2 READ
TSA 3/4 READ
T1
T2
T3
T4
LCS1
LCS2
LRS1
LRS2
L1 ON
L3/L4 ON
L1 ON
L3/L4 ON
T0
T1
T2
T3
T4
TOUCH
NO TOUCH

FIGURE 9F

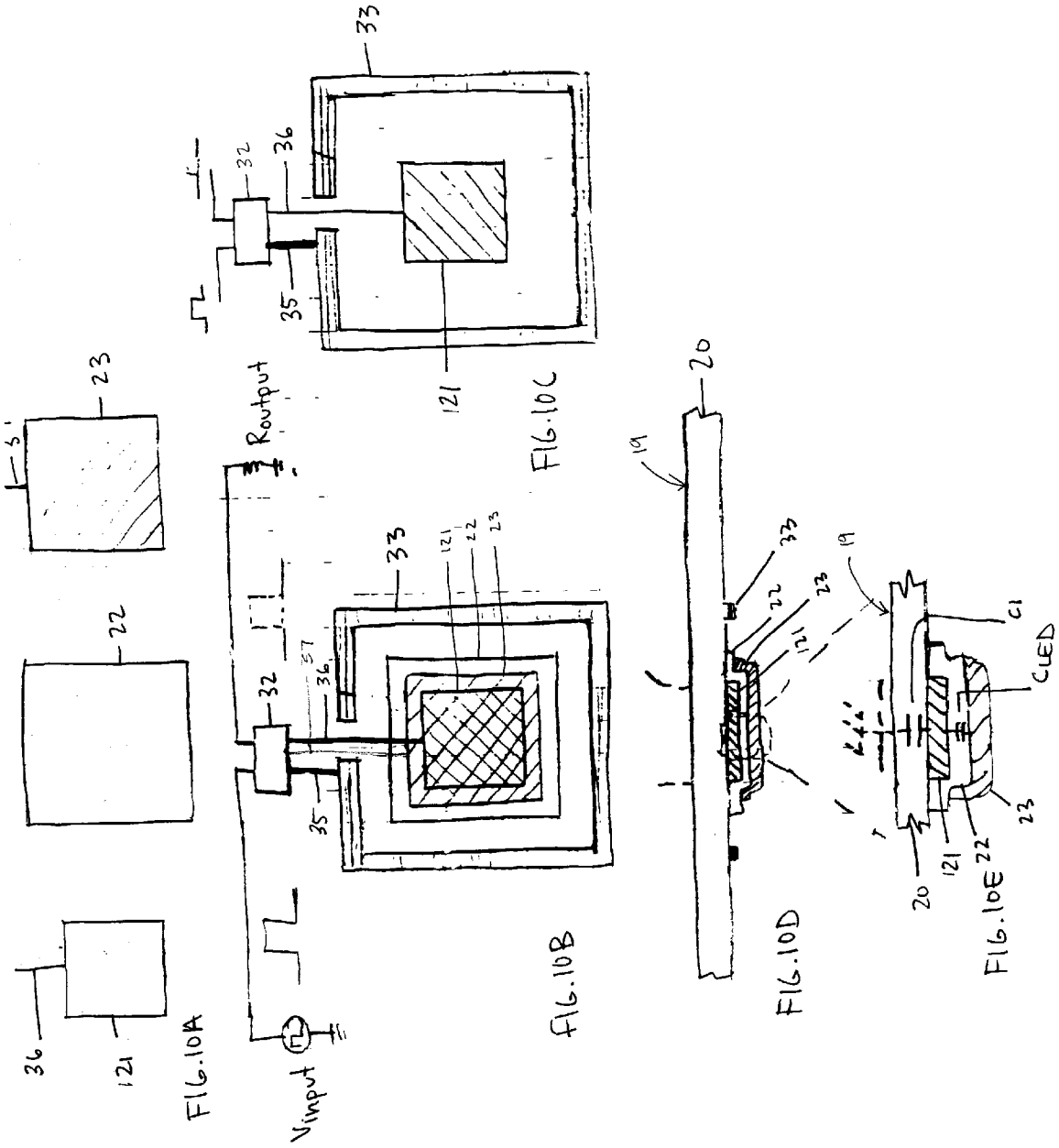

FIG.10A

FIG.10B

FIG.10C

FIG.10D

FIG.10E

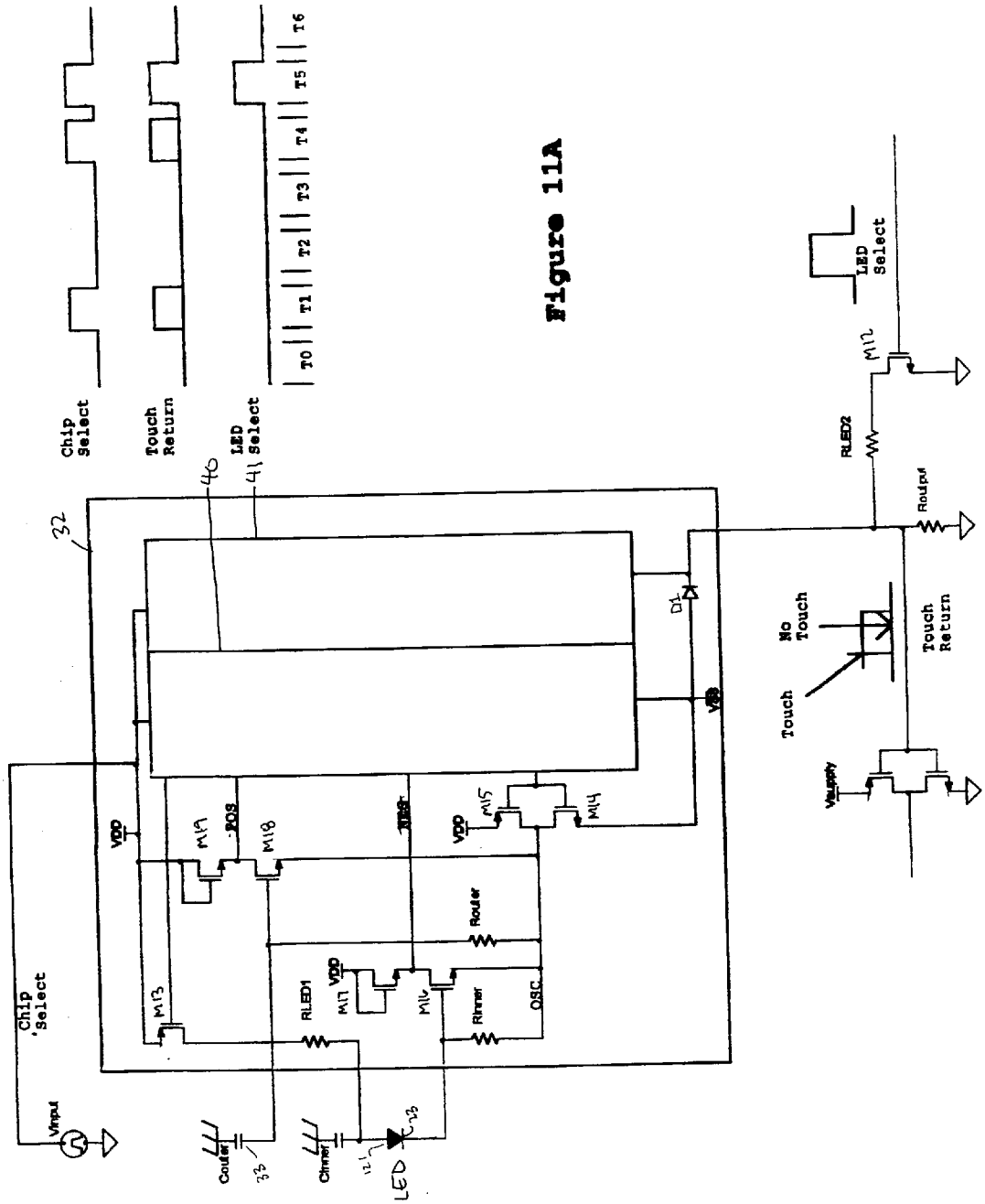
Chip Select
Touch Return
LED Select
T0
T1
T2
T3
T4
T5
T6
32
40
41
VDD
M19
POS
M18
M15
M14
Router
M13
RLED1
M17
M16
Rinner
OSC
Chip Select
Vinput
Couter
33
Cinner
LED
23
D1
VSS
No Touch
Touch
Touch Return
Vsupply
RLED2
Routput
M12
LED Select

Figure 11A

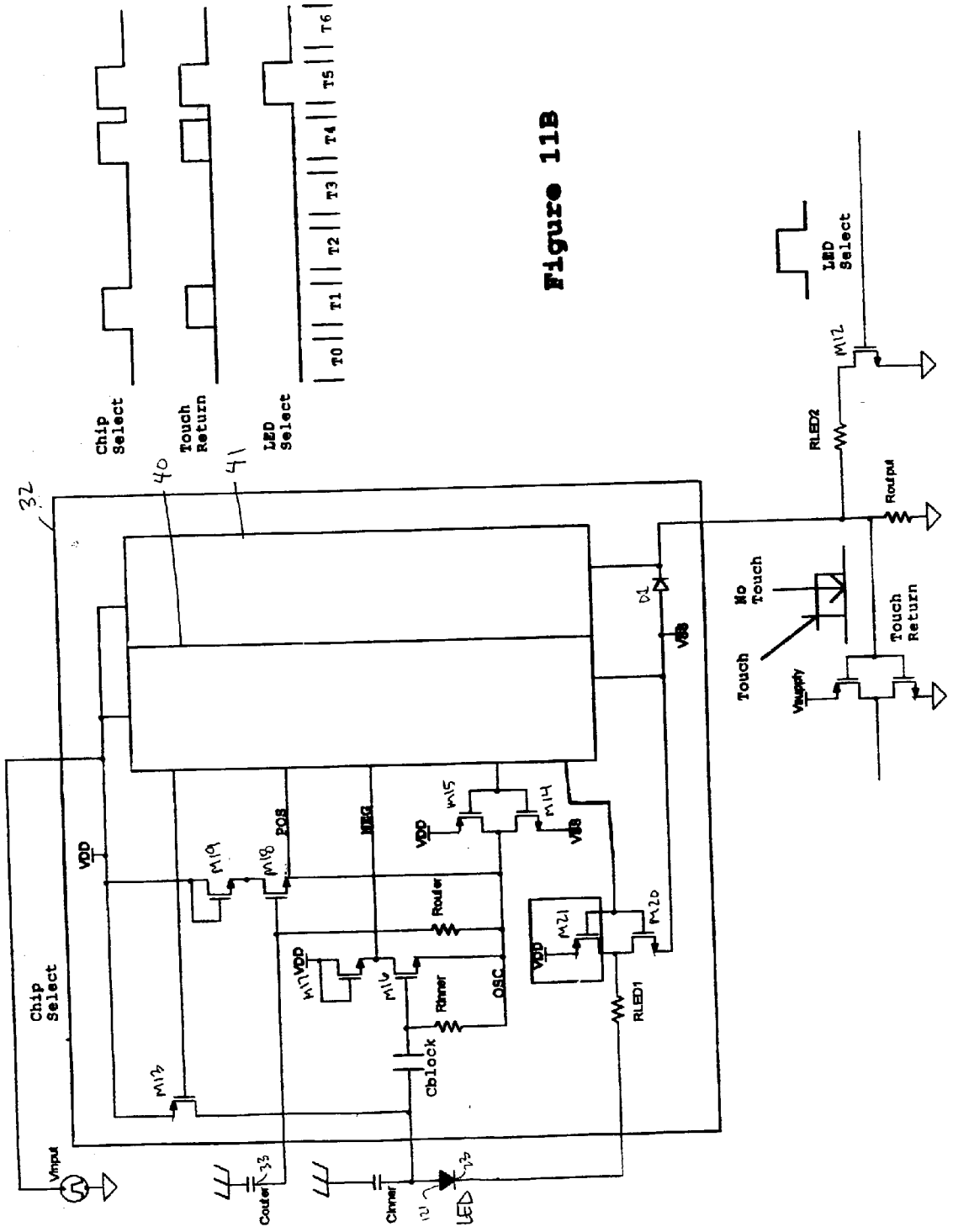
Chip Select
Touch Return
LED Select
T0
T1
T2
T3
T4
T5
T6
32
40
41
LED Select
M12
RLED2
Routput
No Touch
Touch
Touch Return
Vsupply
D1
VSS
VDD
M15
M14
M19
M18
POS
NEG
Router
M17
M16
Rinner
OSC
Cblock
M21
M20
RLED1
M13
Chip Select
Vinput
Couter
Cinner
LED

Figure 11B

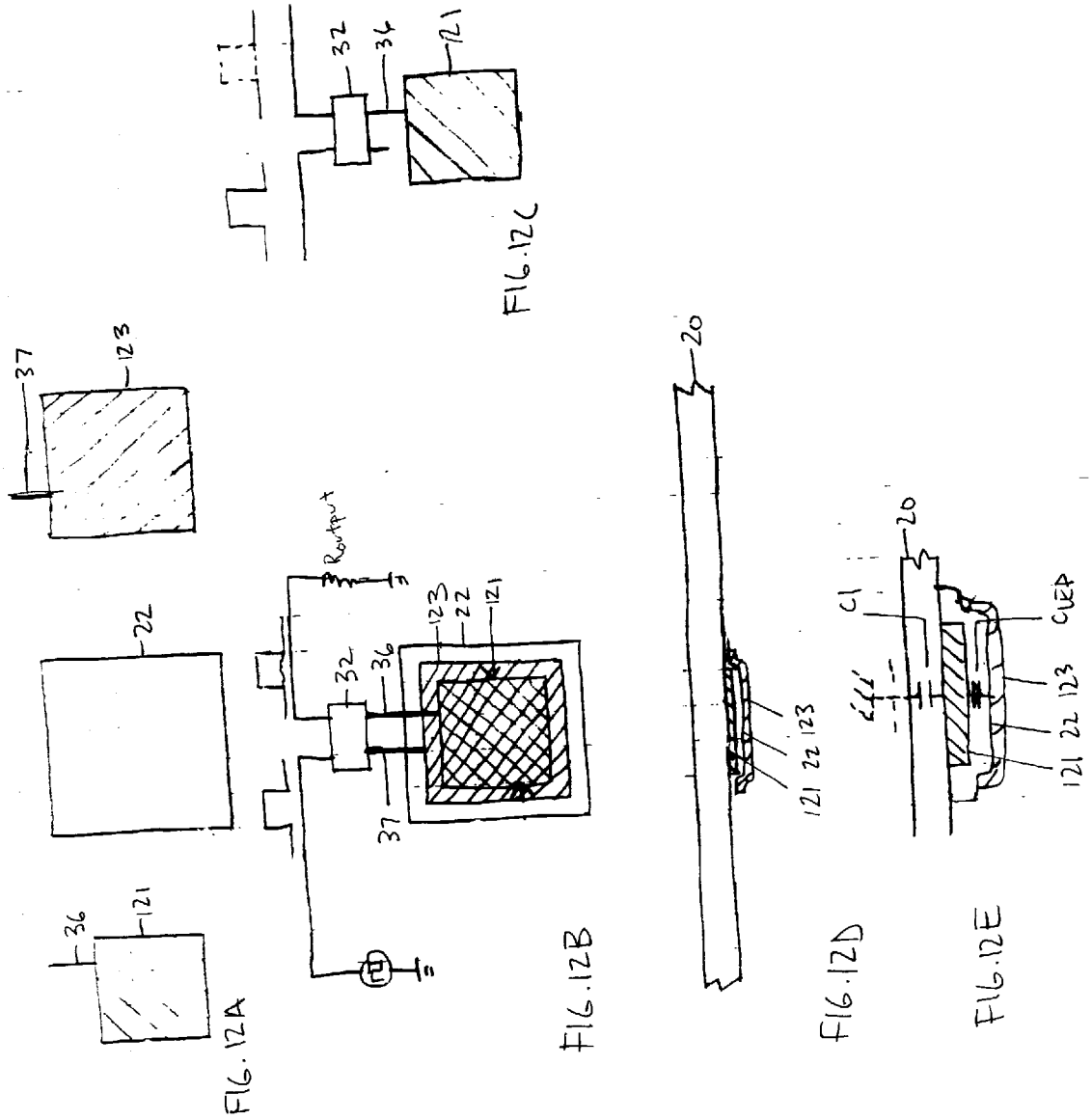

FIG. 12A

FIG. 12B

FIG. 12C

FIG. 12D

FIG. 12E

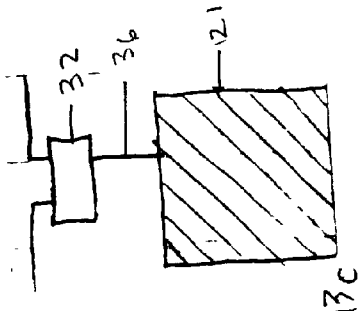

FIG. 13C

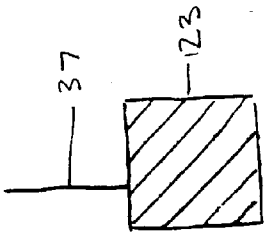

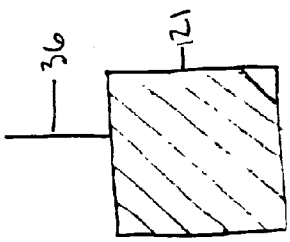

FIG. 13A

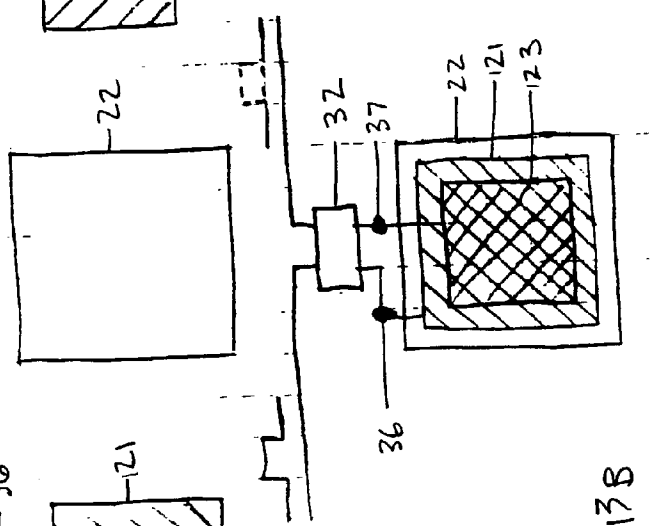

FIG. 13B

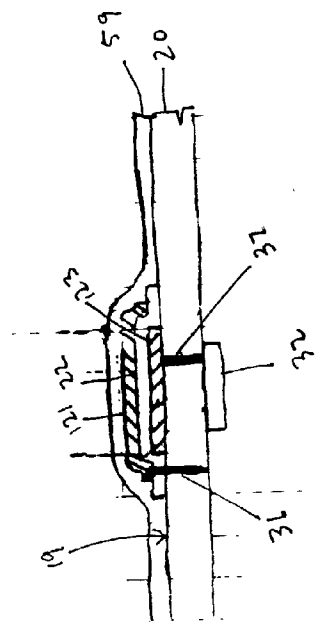

FIG. 13D

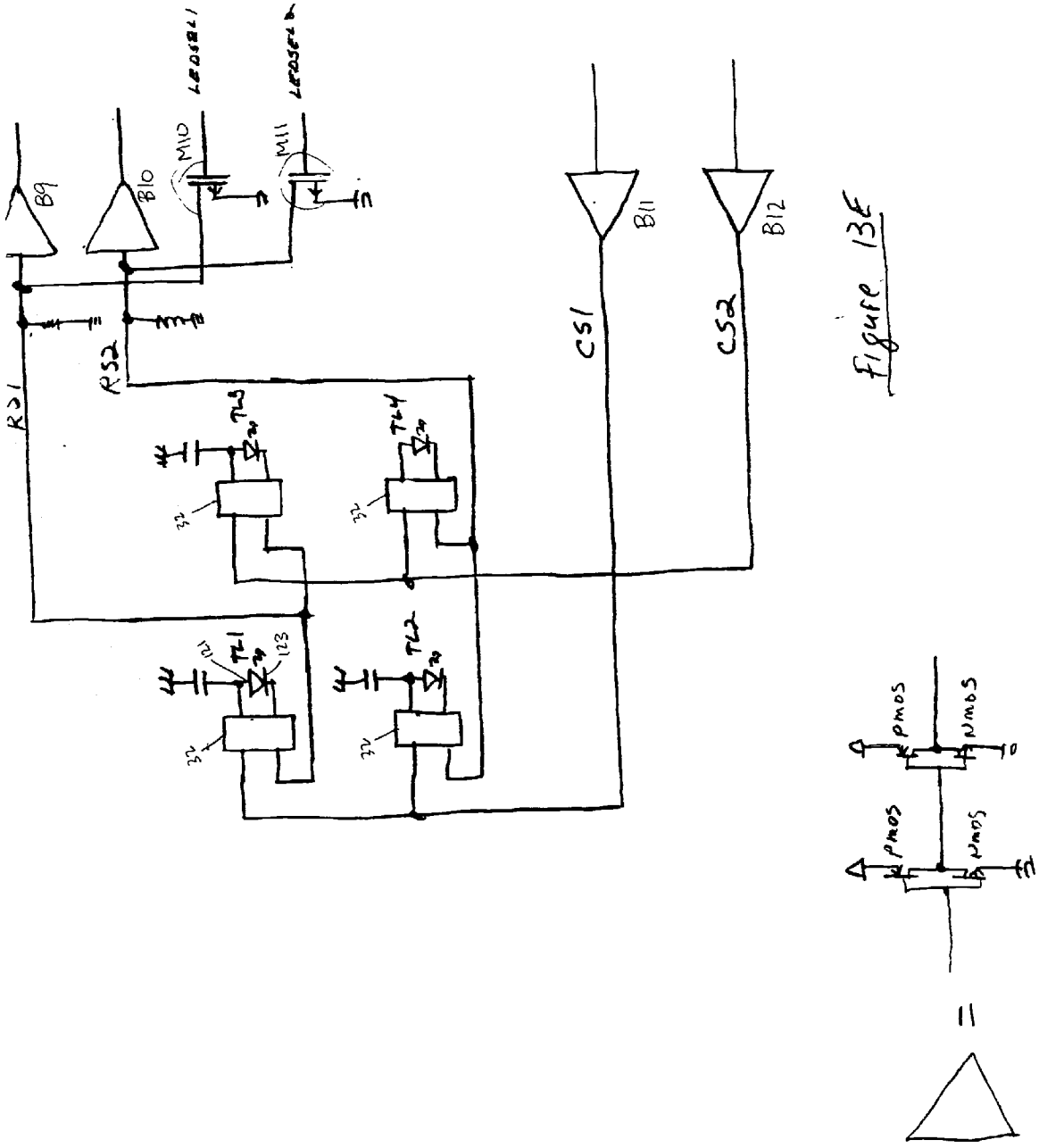
B9
B10
M10
M11
RS1
RS2
TL1
TL2
TL3
TL4
CS1
CS2
B11
B12
pmos
pmos
pmos
pmos

Figure 13E

Figure 13F

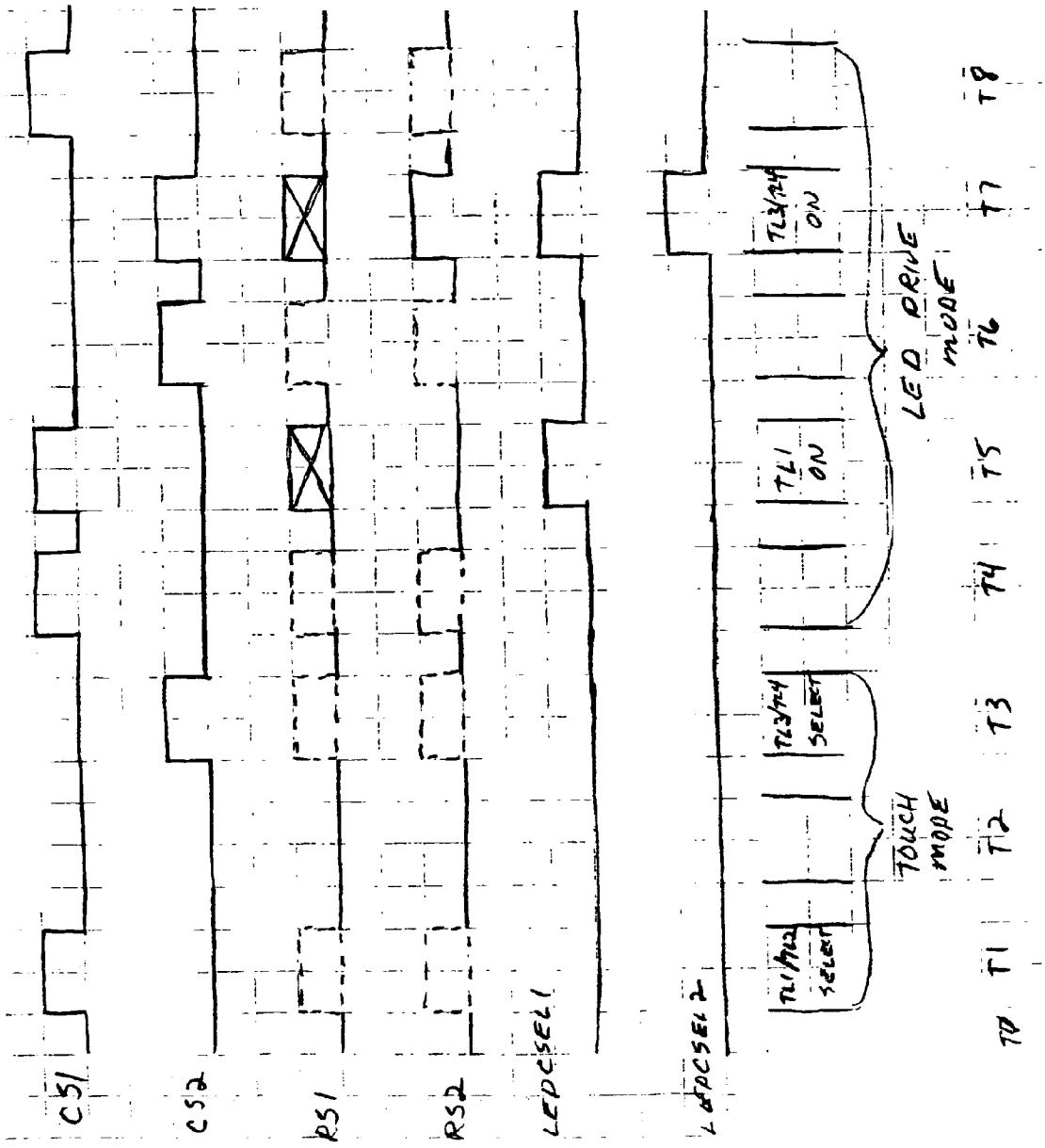
CS1
CS2
RS1
RS2
LEDCSEL1
LEDCSEL2
TL1/TL2 SELECT
TL3/TL4 SELECT
TL1 ON
TL3/TL4 ON
TOUCH MODE
LED DRIVE MODE
T0
T1
T2
T3
T4
T5
T6
T7
T8

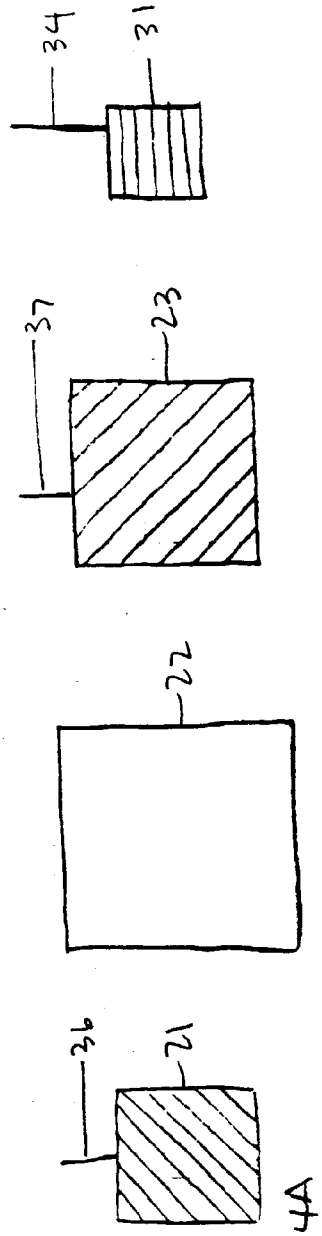

FIG. 14A

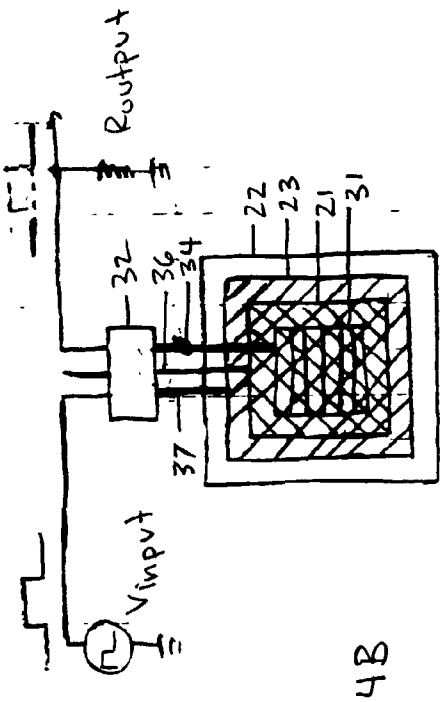

FIG. 14B

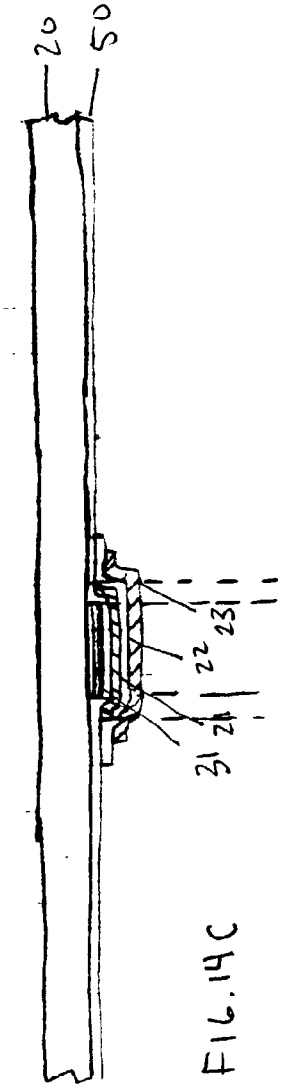

FIG. 14C

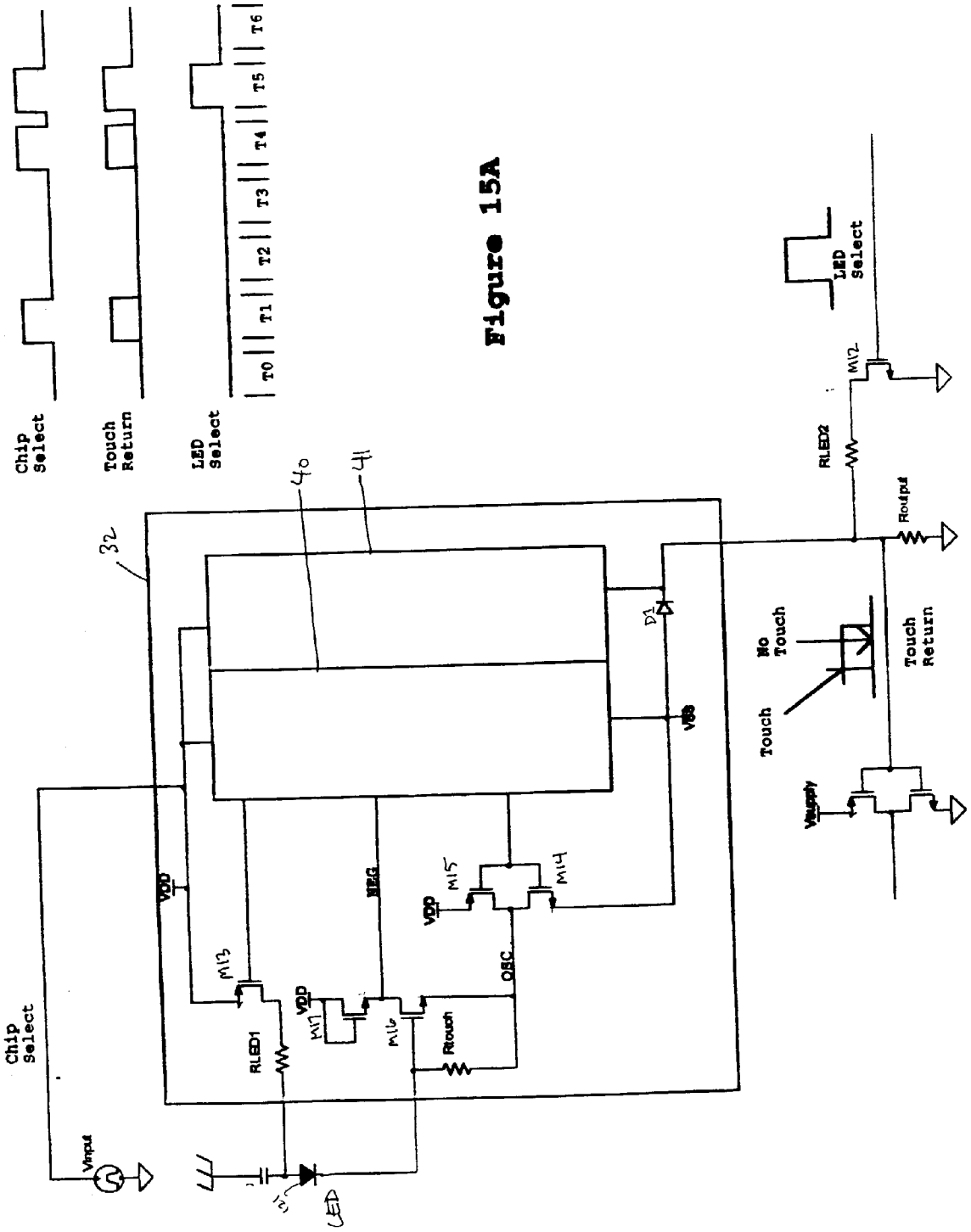
Chip Select
Touch Return
LED Select
T0
T1
T2
T3
T4
T5
T6
32
40
41
D1
VSS
VDD
NEG
OSC
M13
M14
M15
M16
M17
RLED1
Rtouch
Vinput
LED
Vsupply
No Touch
Touch
Touch Return
Routput
RLED2
M12
LED Select

Figure 15A

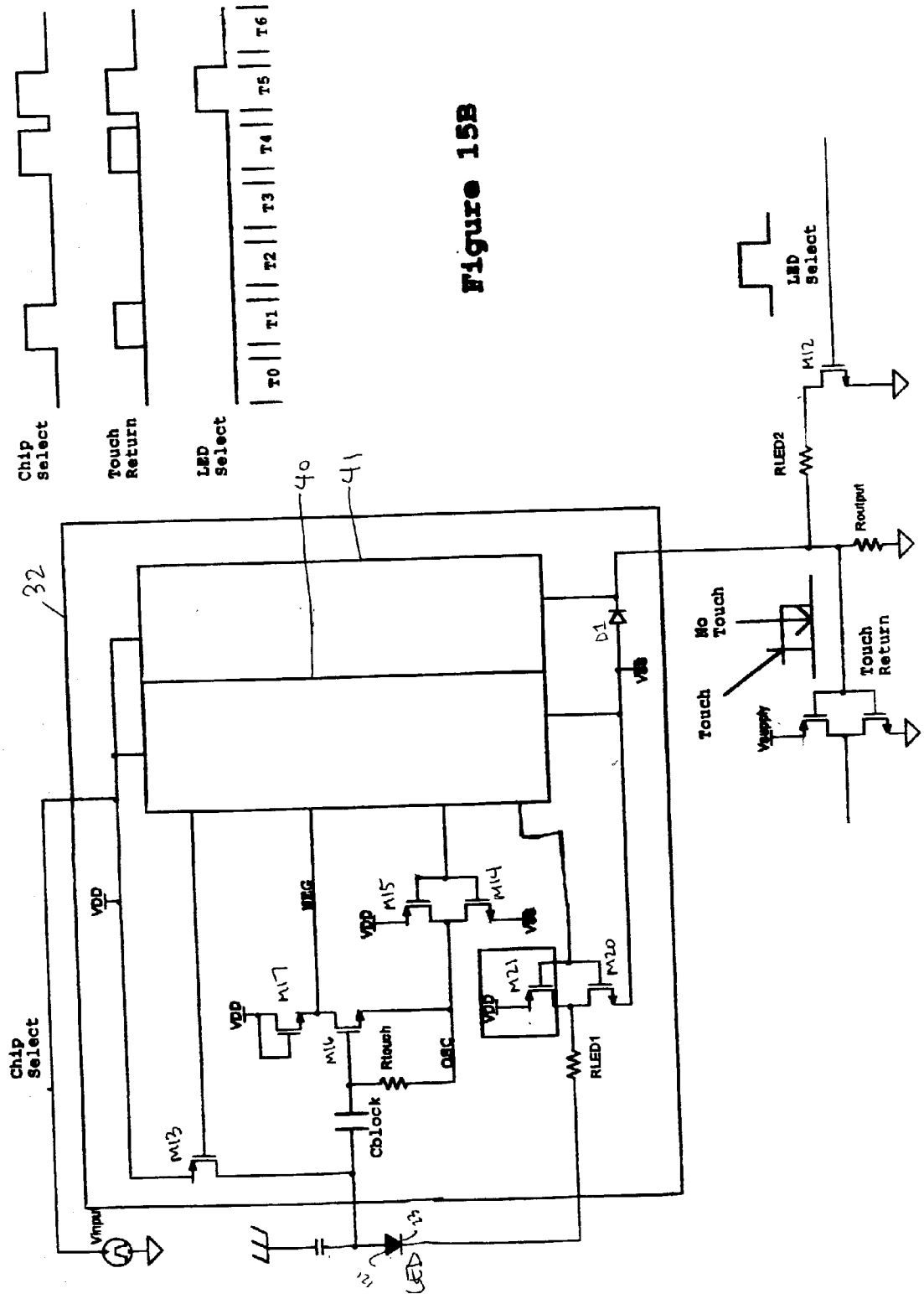
Chip Select
Touch Return
LED Select
T0
T1
T2
T3
T4
T5
T6
32
40
41
D1
VSS
VDD
WEG
M15
M14
M17
M16
M21
M20
M13
Rtouch
OSC
Cblock
RLED1
Vinput
LED
LED Select
M12
RLED2
Routput
No Touch
Touch
Touch Return
Vsupply

Figure 15B

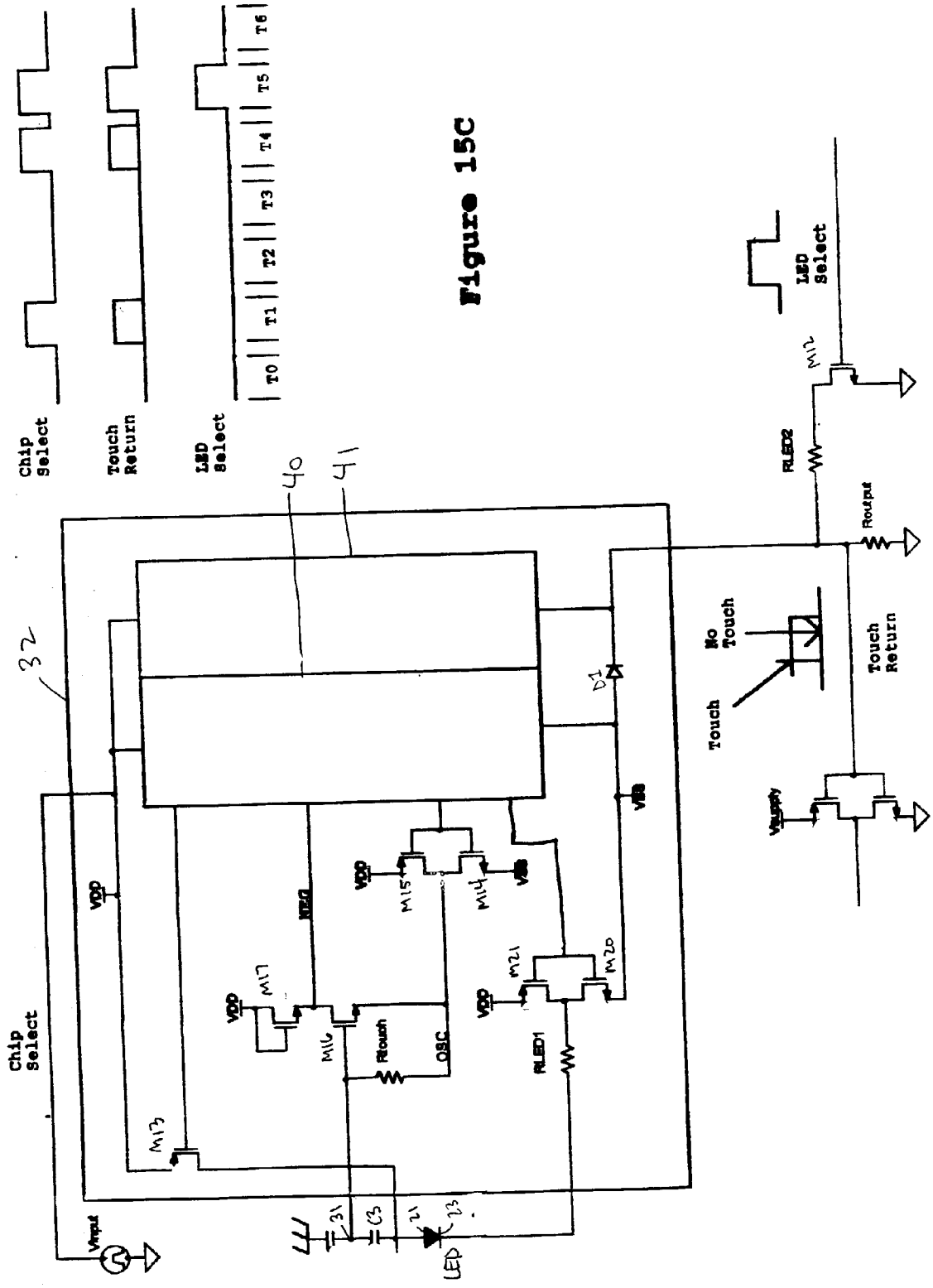
Chip Select
Touch Return
LED Select
T0
T1
T2
T3
T4
T5
T6
40
41
32
D1
VDD
VSS
M13
M14
M15
M16
M17
M20
M21
Rtouch
OSC
RLED1
RLED2
Rout put
Vsupply
Vinput
LED
31
C3
21
23
No Touch
Touch
Touch Return
M12
LED Select

Figure 15C

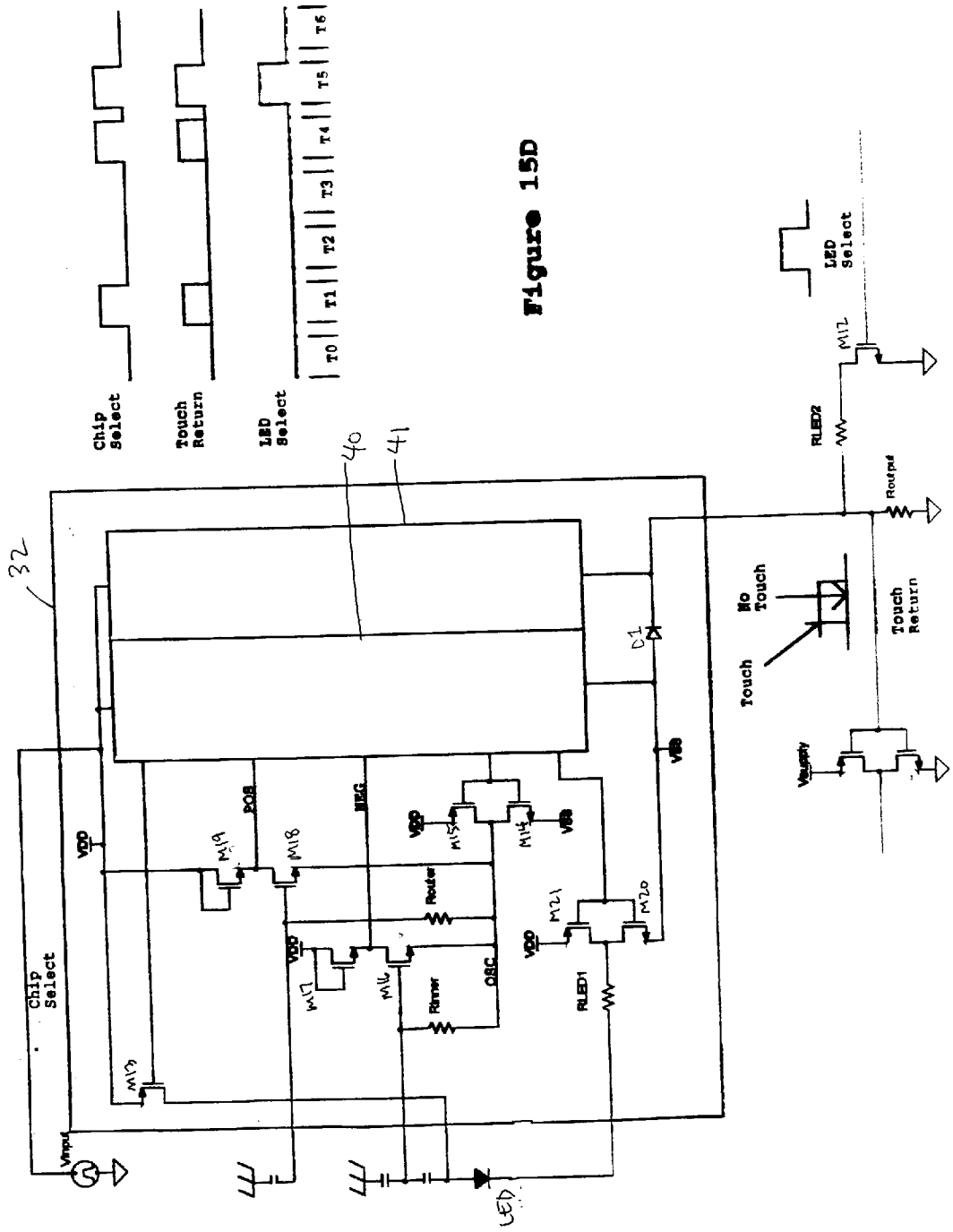
Chip Select
Touch Return
LED Select
T0
T1
T2
T3
T4
T5
T6
32
40
41
D1
VDD
POS
NEG
VSS
M19
M18
M15
M14
M21
M20
M17
M16
M13
Router
Rinner
OSC
RLED1
RLED2
M12
Vinput
Vsupply
No Touch
Touch
Touch Return
LED

Figure 15D

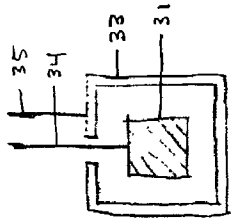

FIG. 16A

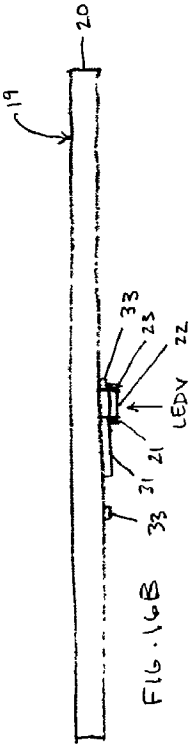

FIG. 16B

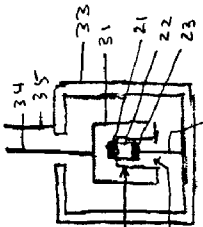

FIG. 16C

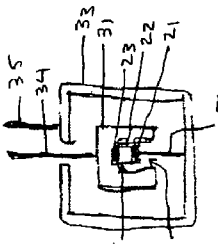

FIG. 16D

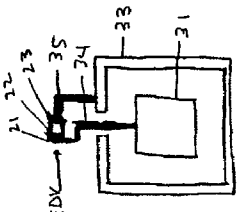

FIG. 16E

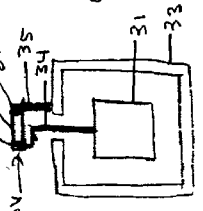

FIG. 16F

FIG. 16G

FIG. 16H

FIG. 16I

FIG. 16J

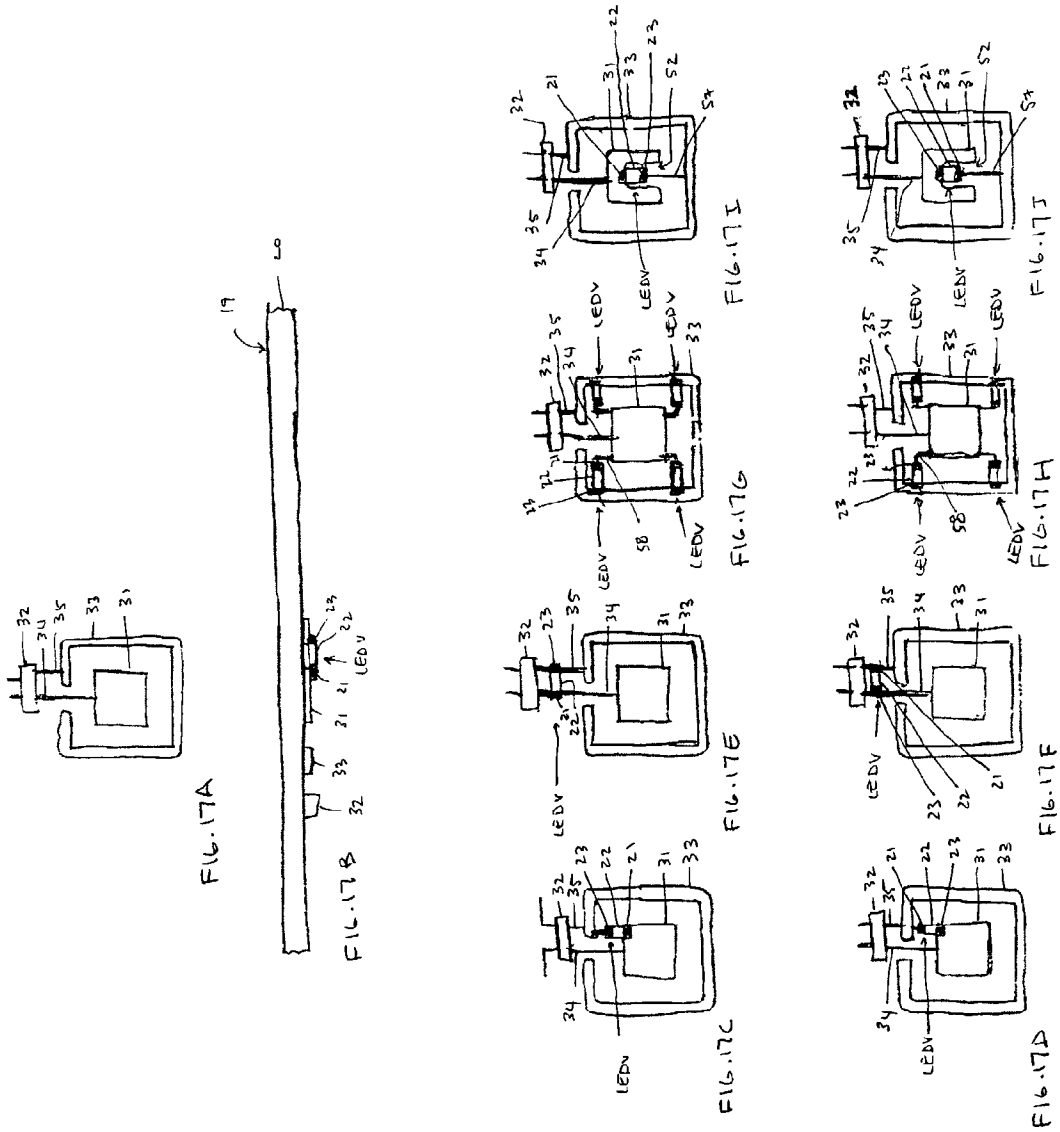
FIG. 17A
FIG. 17B
FIG. 17C
FIG. 17D
FIG. 17E
FIG. 17F
FIG. 17G
FIG. 17H
FIG. 17I
FIG. 17J
LEDV

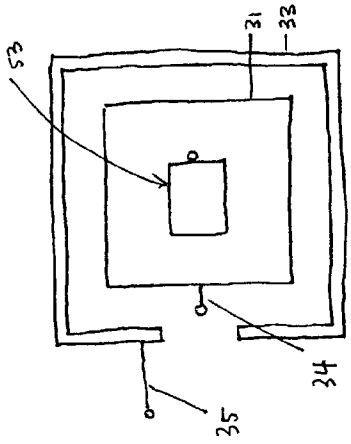

FIG. 18A

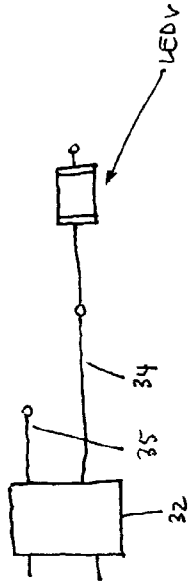

FIG. 18B

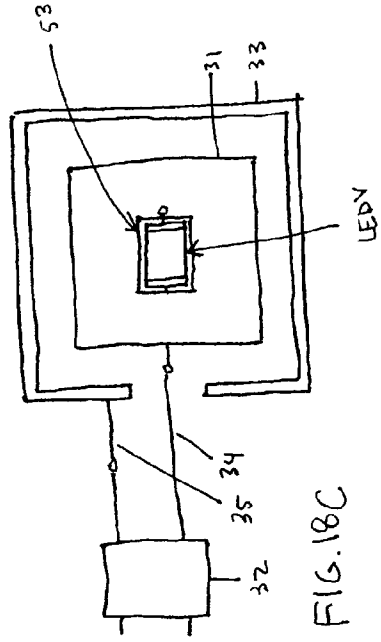

FIG. 18C

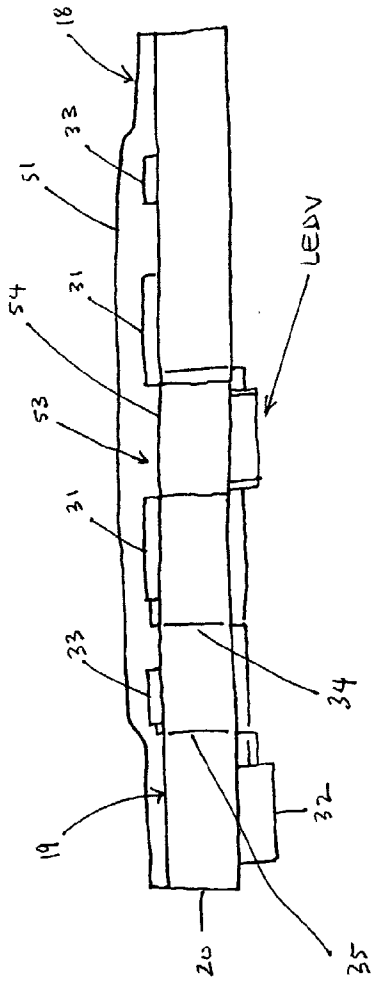

FIG. 18D

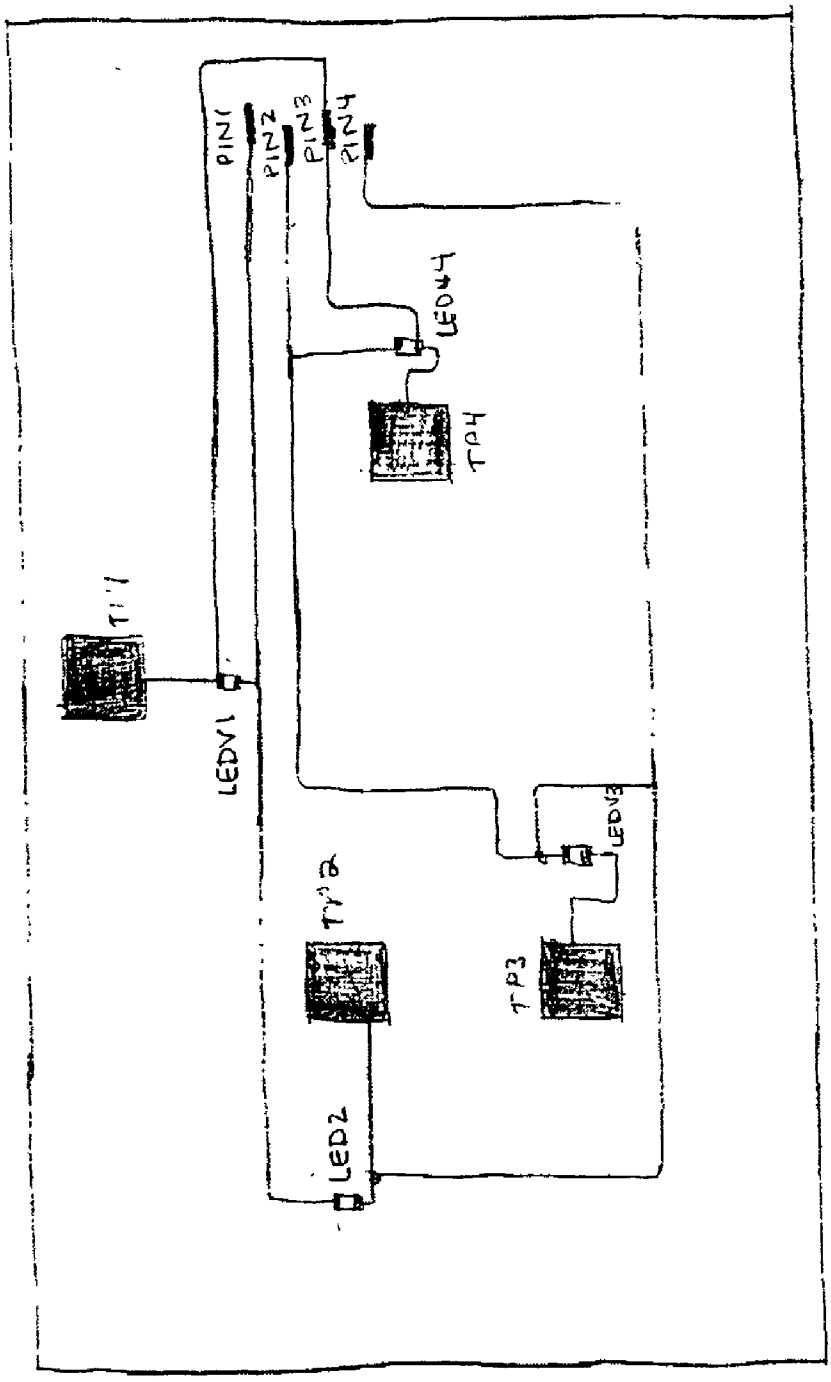

FIG. 19

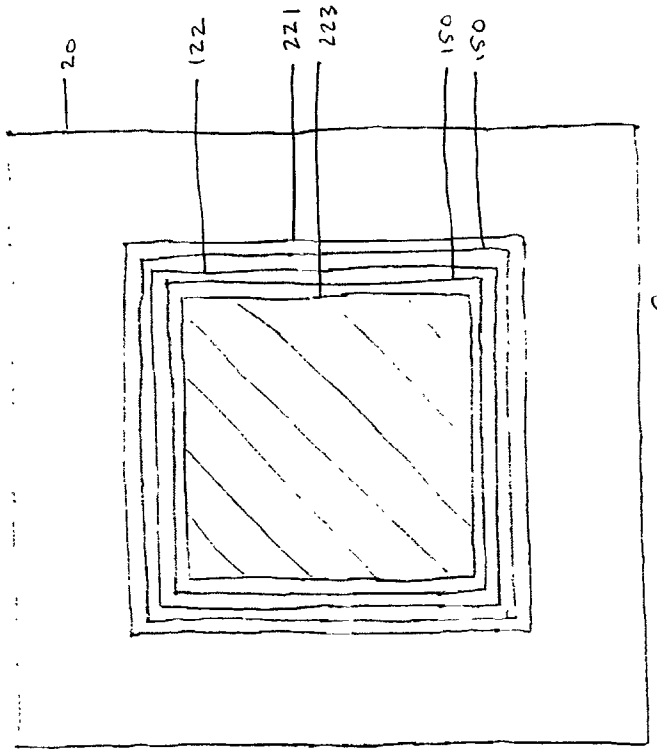

FIG. 20A

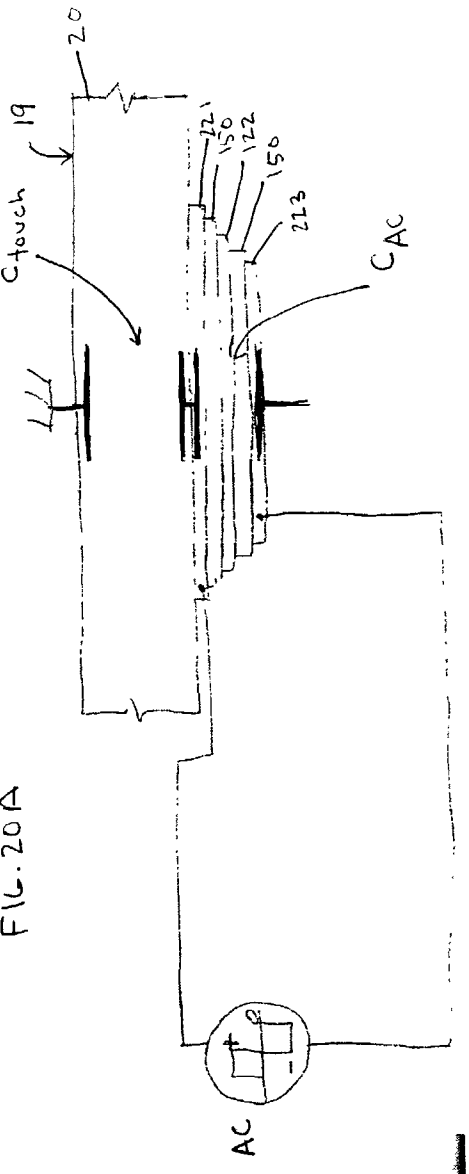

FIG. 20B

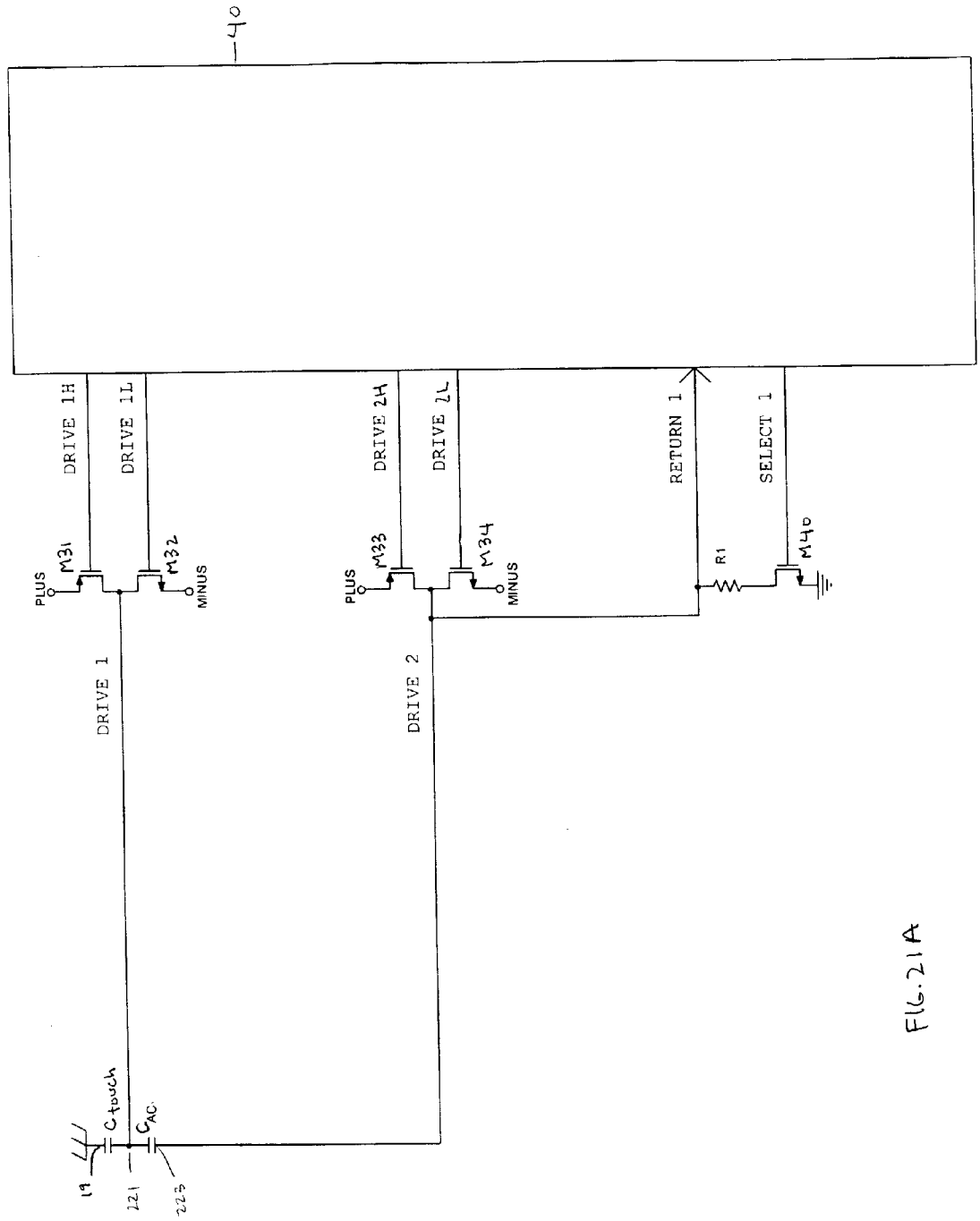
40
DRIVE 1H
DRIVE 1L
DRIVE 2H
DRIVE 2L
RETURN 1
SELECT 1
PLUS
M31
M32
MINUS
PLUS
M33
M34
MINUS
R1
M40
DRIVE 1
DRIVE 2
Ctouch
CAC
19
221
225

FIG. 21A

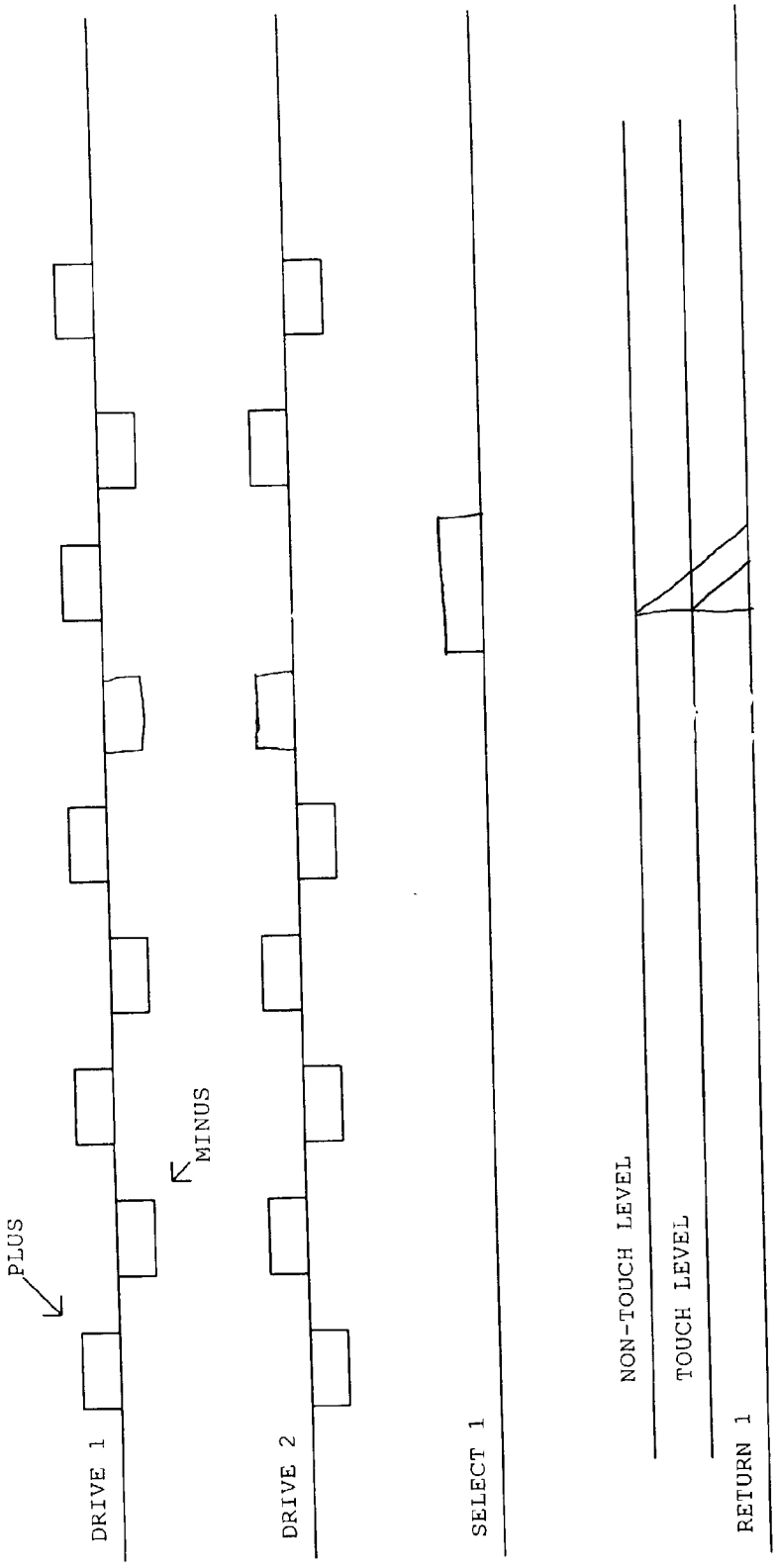
PLUS
MINUS
DRIVE 1
DRIVE 2
SELECT 1
NON-TOUCH LEVEL
TOUCH LEVEL
RETURN 1

FIG. 21B

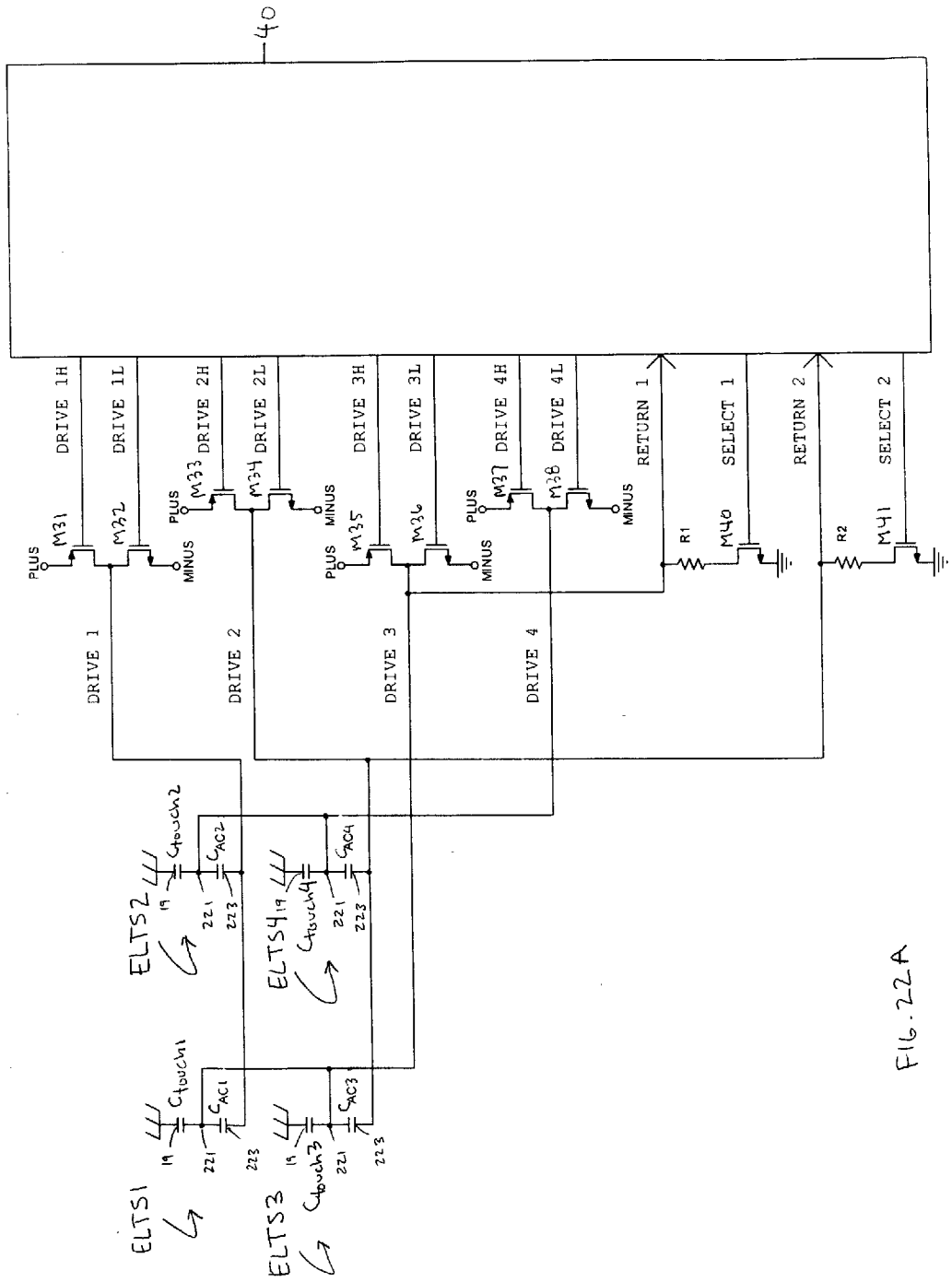
40
DRIVE 1H
DRIVE 1L
DRIVE 2H
DRIVE 2L
DRIVE 3H
DRIVE 3L
DRIVE 4H
DRIVE 4L
RETURN 1
SELECT 1
RETURN 2
SELECT 2
PLUS
MINUS
M31
M32
M33
M34
M35
M36
M37
M38
M40
M41
R1
R2
DRIVE 1
DRIVE 2
DRIVE 3
DRIVE 4
ELTS1
ELTS2
ELTS3
ELTS4
Ctouch1
Ctouch2
Ctouch3
Ctouch4
CAC1
CAC2
CAC3
CAC4
19
221
223

FIG. 22A

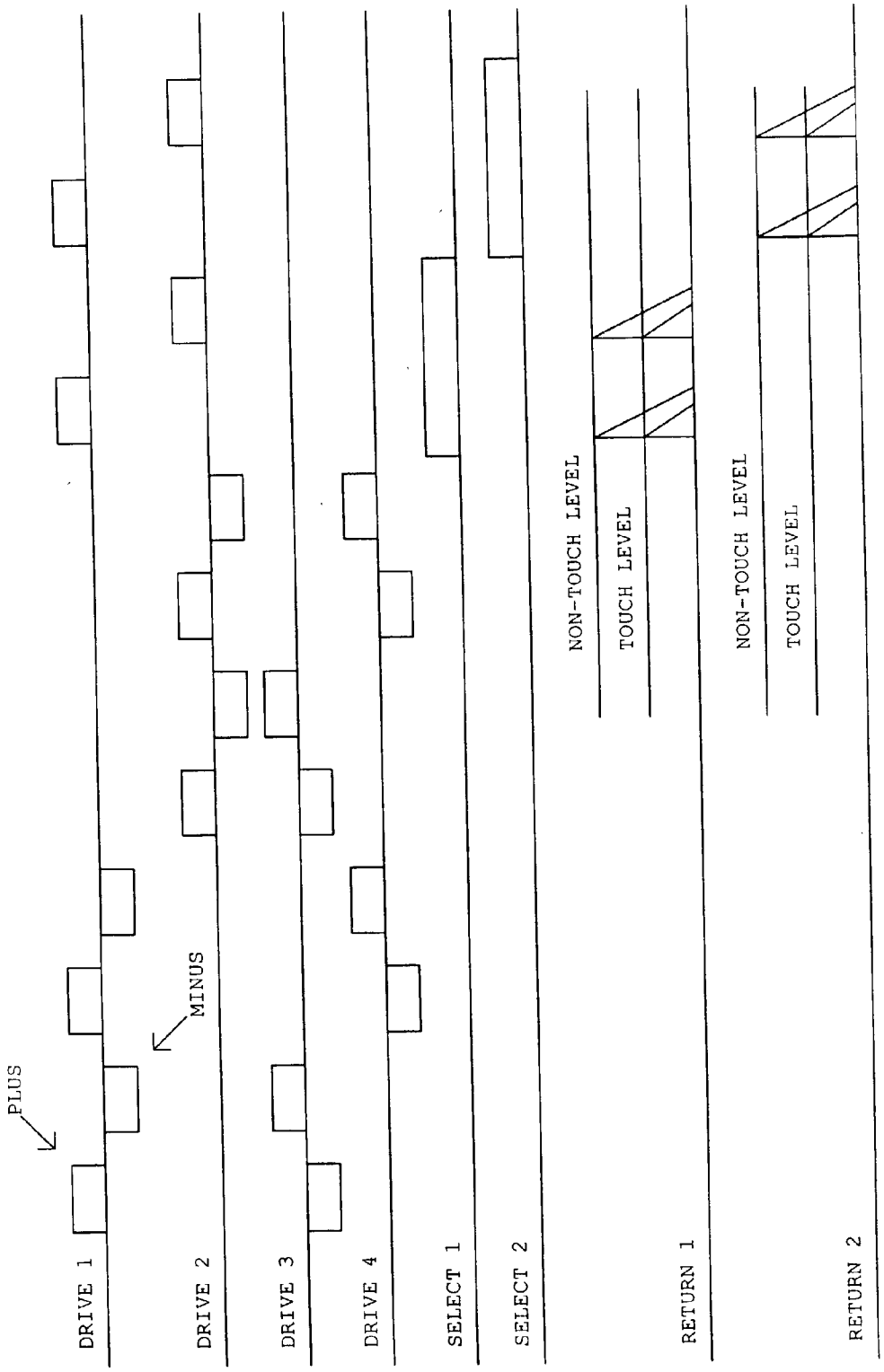
PLUS
MINUS
DRIVE 1
DRIVE 2
DRIVE 3
DRIVE 4
SELECT 1
SELECT 2
NON-TOUCH LEVEL
TOUCH LEVEL
RETURN 1
NON-TOUCH LEVEL
TOUCH LEVEL
RETURN 2

FIG. 22B

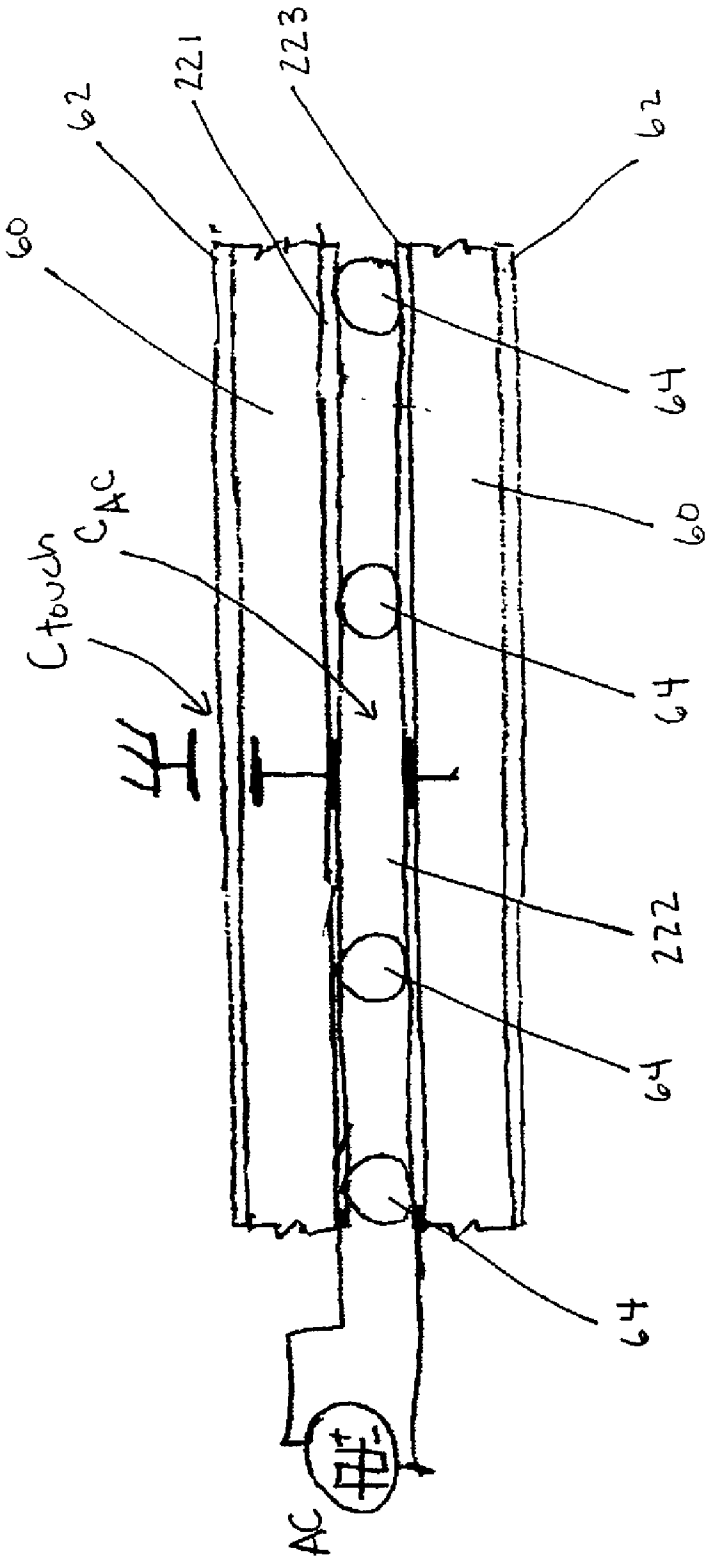

FIG. 23

INTEGRATED TOUCH SENSOR AND LIGHT APPARATUS

CROSS-REFERNCE TO RELATED APPLICATIONS

[0001] This application claims priority from U.S. Provisional Patent Applications Serial No. 60/334,040, filed on Nov. 20, 2001, and Ser. No. 60/341,350, filed on Dec. 18, 2001. The disclosures of the foregoing references are hereby incorporated herein by reference.

BACKGROUND OF THE INVENTION

[0002] Touch sensors are solid state switches that respond to a user's touch or encroachment. As such, they often can be used in place of conventional mechanical switches. Known touch sensors typically include a touch pad having one or more electrodes and an associated circuit that induces an electric field about the touch pad and responds to changes in the electric field when the electric field is disturbed by a stimulus such as a user's touch or proximity. The touch pad and associated circuit typically are disposed on a substrate such as a printed wiring board or a piece of glass. A portion of this or another related substrate typically defines an operative touch surface which the user must touch or approach to provide the stimulus required to trigger the touch sensor. The control circuit can be configured to control a device such as a light, motor or other device.

[0003] Several types of touch sensors are known in the art, including capacitive touch sensors, infrared touch sensors, electric field touch sensors, acoustic touch sensors and electromagnetic touch sensors. Such touch sensors can be configured as described in U.S. Pat. No. 5,594,222, U.S. Pat. No. 5,856,646, U.S. Pat. No. 6,310,611, and U.S. Pat. No. 6,320,282 and in many other ways.

[0004] Touch sensors can be used as part of an input/output system where some form of aural or visual feedback is provided. Feedback can involve either alerting the user to the presence of an operative touch surface or informing the user that a touch has triggered a response in the touch sensor. In many cases, visual feedback involves back-lighting the operative touch surface or other areas on an interface panel. Backlighting can be provided by a light emitting diode (LED) or a light emitting polymer (LEP), including an organic light emitting diode (OLED) or a polymer light emitting diode (PLED) (both of which are LEPs), or any other suitable light source.

[0005] LED, OLED and PLED devices convert electrical energy to light energy in the form of photons. These light emitting devices can include either a transparent anode or a transparent cathode through which the photons generated at their light emitting layers can pass. The light emitting layers of LEDs include semiconductors with doped physical lattice crystal structures. The light emitting layers of OLEDs and PLEDs are composed of small organic molecules and relatively larger organic molecules, respectively. All of the foregoing light emitting devices are typically very thin and can be constructed into point sources or can be made to illuminate large areas, but it may be more economical to do so with OLEDs and PLEDs than with semiconductor devices like LEDs. Using thermal evaporator, thin film sputtering or spin coating techniques, both OLEDs and PLEDs can be mass produced in fewer steps than can semiconductors and may also be economically produced using micro-deposition or ink jet and spin coating equipment. Light produced by any light source can also be spread out or diffused using lenses, light pipes and other suitable devices.

[0006] Because backlighting can be advantageously aligned with an operative touch surface, it is sometimes desirable to locate a touch sensor in close proximity to and/or atop a light emitting device. In the latter case, the touch sensor's electrodes preferably are transparent to allow the light produced by the light emitting device to reach the user. In the prior art, these electrodes are separate components of the backlit touch sensor. Because the touch sensor and backlighting device are separate components, the electrical addressing required to drive them both is often complicated and costly. In cases where the touch sensor must overlie the light emitting device, the light from the light emitting device can be attenuated by the transparent layers of an OLED or PLED and further by the touch sensor components before it reaches the user. In all cases, aligning a light emitting device with a separately constructed touch sensor involves extra material and other manufacturing costs owing to the required connections and alignment of the two.

SUMMARY OF THE INVENTION

[0007] The present invention relates to integration of touch sensors with light emitting devices. One embodiment of the invention involves touch sensors having one or more electrodes that also serve as a conducting layer of a light emitting device. Another embodiment of the invention involves various touch sensor configurations wherein a touch sensor physically overlies but is electrically separate from a light emitting device. The invention further relates to electrical drive and control circuits for operating such devices. The various embodiments of the present invention described below can greatly reduce the cost and complexity of using backlighting with touch sensors. For instance, the present invention can reduce or eliminate the extra material and manufacturing cost associated with the separate touch sensor and lighting assemblies known in the art, which must be electrically coupled and aligned.

BRIEF DESCRIPTION OF THE DRAWINGS

[0008] FIGS. **1A-1C** illustrate typical cross-sectional configurations of an LED, OLED and PLED, respectively, each of which can act as a touch sensor when configured according to the present invention;

[0009] FIGS. **2A-2C** illustrate the separate layers and construction of an OLED or PLED that can act as a touch sensor;

[0010] FIGS. **3A-3B** illustrate the basic construction of a capacitive touch sensor;

[0011] **FIG. 3C** illustrates a schematic representation of a drive circuit for a two-by-two matrix of touch sensors;

[0012] FIGS. **4A-4B** illustrate the basic construction of a touch switch assembly including a typical touch switch with an integrated control circuit in close proximity to the touch sensor;

[0013] **FIG. 4C** illustrates a schematic representation of the integrated control circuit of FIGS. **4A-4B** including the input stage and block diagrams of the processing and latch circuits;

[0014] FIGS. **5A-5D** illustrate the separate layers and construction of the capacitive touch sensor of FIGS. **3A-3B** integrated with an OLED or PLED backlighting device;

[0015] **FIG. 5E** illustrates a schematic representation of a drive circuit for separately stimulating a two-by-two matrix of the integrated touch sensors and light emitting devices of FIGS. **5A-5D**;

[0016] FIGS. **5F-5G** are timing diagrams for the drive circuit of **FIG. 5E**;

[0017] FIGS. **6A-6E** illustrate the separate layers and construction of a bottom-emitting integrated light emitting capacitive touch sensor wherein the electrodes of the touch sensor are conducting layers of the light emitting device;

[0018] FIGS. **7A-7D** illustrate the separate layers and construction of a top-emitting integrated light emitting capacitive touch sensor wherein the electrodes of the touch sensor are conducting layers of the light emitting device;

[0019] **FIG. 8A** illustrates a schematic of a drive circuit for a two-by-two matrix of the integrated light emitting touch sensors of FIGS. **6A-7D**;

[0020] **FIG. 8B** is a timing diagram for the drive circuit of **FIG. 8A**;

[0021] FIGS. **9A-9D** illustrate the separate layers and construction of an integrated touch switch assembly including the capacitive touch switch assembly of FIGS. **4A-4B** integrated with a light emitting device according to the present invention;

[0022] **FIG. 9E** illustrates a schematic representation of a drive circuit for a two-by-two matrix of the integrated touch switch assemblies of FIGS. **9A-9D**;

[0023] **FIG. 9F** is a timing diagram for the drive circuit of **FIG. 9E**;

[0024] FIGS. **10A-10E** illustrate the separate layers and construction of a bottom-emitting integrated light emitting touch switch assembly wherein the inner electrode of the touch switch assembly is a conductive layer of the light emitting device;

[0025] FIGS. **11A-11B** illustrate a schematic representation of control circuits for the integrated touch switch assembly of FIGS. **10A-10E**;

[0026] **FIG. 11A** illustrates the stimulation of the electrode of the touch switch assembly through the relatively large coupling capacitance of the light emitting device;

[0027] **FIG. 11B** illustrates the direct stimulation of the electrode of the touch switch assembly;

[0028] FIGS. **12A-12E** illustrate the separate layers and construction of a bottom-emitting integrated light emitting touch switch assembly wherein the electrode of the touch switch assembly is a conductive layer of the light emitting device;

[0029] FIGS. **13A-13D** illustrate the separate layers and construction of a top-emitting integrated light emitting touch switch assembly wherein the electrode of the touch switch assembly is a conductive layer of the light emitting device;

[0030] **FIG. 13E** illustrates a schematic representation of a drive circuit for a two-by-two matrix of the integrated touch switch assemblies with integrated light emitting devices of FIGS. **10A-13D**;

[0031] **FIG. 13F** is a timing diagram for the drive circuit of **FIG. 13E**;

[0032] FIGS. **14A-14C** illustrate the separate layers and construction of a bottom-emitting touch switch assembly according to the present invention including a capacitive touch switch assembly of FIGS. **5A-5B** and an integrated light emitting device;

[0033] FIGS. **15A-15B** illustrate schematic representations of control circuits for the integrated light emitting touch switch assemblies of FIGS. **12A-13D** wherein the electrode of the touch switch assemblies is a conductive layer of the light emitting devices (**FIG. 15A** illustrates the stimulation of the touch switch assembly electrode through the relatively large coupling capacitance of the light emitting device, and **FIG. 15B** illustrates the direct stimulation of the electrode of the touch switch assembly);

[0034] **FIG. 15C** illustrates a schematic representation of a control circuit for the integrated touch switch assemblies according to the present invention of FIGS. **14A-14D**;

[0035] **FIG. 15D** illustrates a schematic representation of a control circuit for the integrated touch switch assembly according to the present invention of FIGS. **9A-9D**;

[0036] FIGS. **16A-16J** illustrate touch switches where the light emitting device is coupled with the touch detection electrodes but is neither atop nor underneath them;

[0037] FIGS. **17A-17J** illustrate the configurations of FIGS. **16A-16J** where the touch switches include an integrated control circuit proximate the touch detection electrodes;

[0038] FIGS. **18A-18D** illustrate a touch switch where a light emitting device and an aperture in a touch detection electrode are aligned with an aperture in the carrier substrate and a transparent window in a decorative layer;

[0039] **FIG. 19** illustrates an arrangement of four touch switches each coupled to a light emitting device located remote from the touch pads of the touch switches;

[0040] FIGS. **20A-20B** illustrate a touch switch with an integrated electroluminescent light emitting device;

[0041] **FIG. 21A** illustrates a possible configuration of the input and output lines of a logic circuit for a touch switch and integrated electroluminescent device depicted in FIGS. **20A-20B**;

[0042] **FIG. 21B** illustrates a timing diagram for the configuration in **FIG. 21A**;

[0043] **FIG. 22A** illustrates a possible configuration of the input and output lines of a logic circuit for a two-by-two matrix of touch switches and integrated electroluminescent devices depicted in FIGS. **20A-20B**;

[0044] **FIG. 22B** illustrates a timing diagram for the configuration in **FIG. 22A**; and

[0045] **FIG. 23** illustrates a touch switch with a liquid crystal integrated light emitting device.

DETAILED DESCRIPTION OF THE DRAWINGS

[0046] While the drawings generally depict capacitive and electric field touch switches for the purpose of illustration, the principles of the present invention can be seen by those

skilled in the art as appropriate for any manner of touch switch device, including, but not limited to, capacitive touch switches, infrared touch switches, electric field touch switches, acoustic touch switches and electromagnetic touch switches. Specific examples include the touch switches described in U.S. Pat. No. 5,594,222, U.S. Pat. No. 5,856,646, U.S. Pat. No. 6,310,611 and U.S. Pat. No. 6,320,282, each naming David W. Caldwell as inventor. The disclosures of the foregoing U.S. patents are hereby incorporated herein by reference. The disclosures of U.S. patent application Ser. No. _____, entitled Intelligent Shelving System, Ser. No._____, entitled Molded/Integrated Touch Switch/Control Panel Assembly and Method for Making Same, Ser. No._____, entitled Touch Switch with Integrated Control Circuit, and Ser. No._____, entitled Touch Sensor with Integrated Decoration, all filed on Oct. 15, 2002 and all naming David W. Caldwell as an inventor, are also hereby incorporated herein by reference.

[**0047**] FIGS. **1A-1C** illustrate the separate layers that make up typical light emitting devices. The light emitting devices illustrated in FIGS. **1A-1C** are bottom-emitting light emitting devices, as would be evident to one skilled in the art, but could also represent top-emitting light emitting devices. The separate layers of each light emitting device shown in FIGS. **1A-1C** can be disposed on substrate **20** using the techniques discussed above or any other suitable techniques known in the art. The separate layers of each light emitting device include anode **21**, emissive stack **22** and cathode **23**. In FIGS. **1A-1C**, anode **21** is typically transparent and can be composed of indium tin oxide or other transparent electrode material. The composition of emissive stack **22** is slightly different for each device. Thus, in **FIG. 1A**, emissive junction layer **22** of the LED depicted can be a standard PN junction material, e.g., InGaN, GaP, AlInGaP, or GaAlAs. In **FIG. 1B**, emissive stack **22** of the OLED depicted can include hole injection layer **24**, hole transport layer **25**, emitting layer **26**, which can be, for example, CuPc, NPB, and Alq3, respectively, and electron transport layer **27**. In **FIG. 1C**, emissive stack of the PLED depicted can include a hole transport layer **25** and emissive layer **26**, which can be PEDOT and PPV, respectively. One difference between the composition of emissive stacks **22** of the OLED of **FIG. 1B** and of the PLED of **FIG. 1C** is the relatively larger polymer molecules (not shown) in the latter. The configuration of the OLED of **FIG. 1B** provides for an efficient LEP, but other, less efficient, configurations can be used in any of the embodiments of the present invention described below. For instance, LEPs can include as few as one organic layer. The multiple layered configuration of the OLED (or PLED) depicted in **FIG. 1B** can vary depending on the application. Emissive stack **22** of **FIGS. 1B and 1C** can include HTL, ETL, other emissive organic molecules or composite materials. When these light emitting devices are configured according to certain embodiments of the present invention described below, they can exhibit a touch sensor field and can act as a touch switch when coupled to a control circuit. Each of these devices are compatible with the various embodiments described below. Where one device is used to illustrate an particular embodiment, it will be understood that other light emitting devices could be substituted.

[**0048**] FIGS. **2A-2C** illustrate the separate layers and basic construction of a typical bottom-emitting PLED or OLED. **FIG. 2A** shows the anode **21**, emissive stack **22** and cathode **23** of a PLED or OLED. Both anode **21** and cathode **23** include a trace, **36** and **37**, respectively, that allows the PLED or OLED to be connected to a voltage source (not shown). **FIG. 2B** shows a bottom view of the assembled PLED or OLED, with anode **21** beneath emissive stack **22**, which is beneath cathode **23**. **FIG. 2C** shows the assembled PLED or OLED borne on substrate **20**. Anode **21** can advantageously be transparent to allow light from emissive stack **22** to reach the surface of substrate **20**. Other configurations of anode **21** can include a fine mesh or other configuration that, while not transparent, allows at least a portion of light from emissive stack **22** to reach the surface of substrate **20**. In any of the configurations described herein, at least a portion of substrate **20** must be transparent or translucent if light is to pass therethrough.

[**0049**] FIGS. **3A-3B** illustrate a capacitive touch sensor. **FIG. 3A** shows electrode **31** connected through trace **34** to square wave voltage source V_{input} (in other embodiments, other voltage sources and waveforms may be used) and electrode **33**, substantially surrounding electrode **31**, connected through trace **35** to resistance R_{output}. Voltage source V_{input} induces an electric field between and about electrode **31** and electrode **33**. **FIG. 3B** shows a cross-sectional view of the capacitive touch sensor of **FIG. 3A** borne on substrate **20**. Surface **19** of substrate **20** prevent a user from directly touching or coming more than a minimum distance near electrodes **31** and **33**. This creates capacitance C_{inner} and capacitance C_{outer} between a user's appendage and electrodes **31** and **33**, respectively, as shown in **FIG. 3A**. A user's approach toward or touch of surface **19** of substrate **20** can increase the capacitance between electrode **33** and the user's approaching or touching appendage. The increased capacitance increases the voltage at electrode **33**. This increased voltage can induce a signal in a control circuit (not shown) to effect a response in an end device (not shown).

[**0050**] Other touch sensor configurations are also possible. Electrode **33** could receive the signal of voltage source V_{input} and electrode **31** could send an output signal to a control circuit or a single electrode could both receive an input signal and send an output signal. A third electrode (not shown) can also be included in the touch sensor of FIGS. **3A-3B**, preferably between electrode **31** and electrode **33**. This third electrode could be connected to the signal of square wave voltage source V_{input}. Electrodes **31** and **33** could then both be connected to a differential control circuit, which then could advantageously be configured to differentiate between the voltages induced in electrodes **31** and **33**. For instance, a relatively large voltage induced in electrode **31** can cause the control circuit to generate an output to effect a response in an end device, while a relatively large voltage induced in electrode **33**, or a comparable voltage induced in both electrodes **31** and **33**, can cause the control circuit to generate no output or a different output so as to effect no response in an end device.

[**0051**] Touch sensors can be located on an input/output interface panel in a matrix pattern. **FIG. 3C** illustrates schematically a drive circuit capable of selectively activating the touch sensors of FIGS. **3A-3B** arranged in a two-by-two matrix. Touch sensors TS1-TS4 are shown schematically. Each touch sensor involves a capacitance C1 between electrode **31** and electrode **33** and a capacitance C_{LED} between electrode **33** and surface **19** of substrate **20**. When a user of the interface panel of touch sensors touches or approaches the surface **19** of substrate **20**, the capacitance

between electrode **33** and surface **19** and the voltage of electrode **33** can increase. The touch induced voltage increase of electrode **33** prolongs the peak detected by AND gate AND as shown relative to input OSC in **FIG. 3C**. The change in voltage can be sent to an output gate, a control circuit or, ultimately, to an end device.

[**0052**] The logic gates of the drive circuit of **FIG. 3C** can control the activation of the touch sensors of the matrix. In **FIG. 3**C, oscillating signal OSC sends a square wave signal to AND gates AND1 and AND2, which also receive inputs from signals TSCSELECT1 and TSCSELECT2, provided by a logic circuit (not shown). When both oscillating signal OSC and signal TSCSELECT1 are high, AND gate AND1 will have a high output TSC1, which will induce an electric field in touch sensors TS1 and TS2. Signal TSCSELECT1 thus works to control the passage of oscillating signal OSC to the touch sensors of the right hand column of touch sensors, composed of touch sensors TS1 and TS2. The analog multiplexer AMP of **FIG. 3C** can select which of the touch sensors TS1 and TS2 will be allowed to send a response signal to AND gate AND. When TSELECT1, according to a logic circuit (not shown), sends a signal to switch SW1 that closes it, and TSELECT2 does not send a similar signal to switch SW2, AND gate AND can output a signal on trace AND_OUT that is dependent on the voltage of TS1. When either TSELECT1 or TSELECT2 send a signal to switch SW1 or SW2, respectively, closing either switches, AND gate AND can output a signal on trace AND_OUT that is dependent on the voltage of either touch sensor TS1 or TS2. Thus, the drive circuit of **FIG. 3C** is capable of activating an individual touch sensor within the matrix, a column of touch sensors within the matrix or a row of touch sensors within the matrix, preferably according to a logic circuit (not shown).

[**0053**] FIGS. **4**A-**4**B illustrate a touch switch with integrated control circuit, wherein integrated control circuit **32** is located proximate touch sensor electrodes **31** and **33**, which are connected to integrated control circuit **32** through traces **34** and **35**, respectively. In **FIG. 4**B, the touch switch with integrated control circuit of **FIG. 4A** is shown, in cross-section, borne on substrate **20**. **FIG. 4C** illustrates a possible configuration of integrated control circuit **32** of FIGS. **4**A-**4**B. In **FIG. 4**C, oscillating signal OSC stimulates both electrode **31** and **33** through resistances R_{inner} and R_{outer}, respectively. Active devices M2 and M4 are connected to chip select signal VDD. Though NMOS active devices are shown, other devices could be substituted, including PMOS or bipolar active devices or resistors. The gates of active devices M1 and M3 are connected to electrodes **31** and **33**, respectively. Though NMOS devices are shown, other types of active devices could be substituted including PMOS or bipolar active devices. The components of integrated control circuit **32** and electrodes **31** and **33** can be configured so that peak potentials developed at inputs POS and NEG can be substantially equal when no stimulus is applied to either electrode. Alternatively, the neutral state peak potential at input NEG can be relatively higher than at input POS to prevent unintended actuations of the processing and latch circuits **40** and **41**, respectively. When a user-induced stimulus is applied at electrode **31**, electric field capacitance C1 increases and the potential at electrode **31** increases. The potential at the gate of active device M1 will then temporarily be greater than the potential at its source, causing active device M1 to be biased on. When biased on, active device M1 will have a drain current that can be converted to a proportional potential by active device M2, causing the differential between the potential at inputs POS and NEG to change, in turn causing processor circuit **40** to close latch circuit **41** allowing current to develop across resistor R_{output}. The operation of one embodiment of processing circuit **40** and latch circuit **41** is more thoroughly described in U.S. Pat. No. 6,320,282. Other processing outputs and latch circuits could be used as well.

[**0054**] FIGS. **5**A-**5**D illustrate a light emitting touch switch according to the present invention including the capacitive touch sensor of FIGS. **3**A-**3**B and the light emitting device of FIGS. **2**A-**2**C. The embodiment of the present invention depicted in FIGS. **5**A-**5**D involves a touch switch and a light emitting device that are physically integrated but electrically separate. **FIG. 5A** shows the separate layers of the light emitting device, including anode **21**, trace **36** connected to anode **21**, emissive stack **22**, cathode **23** and trace **37** connected to cathode **23**. **FIG. 5C** shows the touch sensor including electrode **31**, trace **34** connected to electrode **31**, electrode **33**, and trace **35** connected to electrode **33**. Traces **34** and **35** could function as an output line, could be connected to a signal source or both. **FIG. 5B** shows the separate layers of the light emitting touch switch according to the present invention one atop the other, with the touch switch components of **FIG. 5**C, namely, electrodes **31** and **33** atop anode **21** atop emissive stack **22** atop cathode **23**. In **FIG. 5**B, electrode **31** is aligned with and overlies anode **21**, which is consequently not labeled. **FIG. 5D** shows the light emitting touch switch according to the present invention borne on substrate **20**. Insulating layer **50** separates the touch sensor components of **FIG. 5C** from the light emitting device components of **FIG. 5A**. Insulating layer **50** can be SiO_2 or any other suitable material and is preferably entirely transparent or transparent in certain areas, but may also be non-transparent. Anode **21** of the light emitting device is preferably transparent to allow light from emissive stack **22** to reach surface **19** of substrate **20**, but can be otherwise, as discussed above. As indicated previously, at least a portion of substrate **20** must be transparent or translucent to allow light to pass therethrough to surface **19** thereof.

[**0055**] **FIG. 5E** illustrates a possible drive circuit capable of controlling the activation of a two-by-two matrix of the physically integrated but electrically separate touch sensors and light emitting devices of FIGS. **5**A-**5**B. In **FIG. 5**E, the activation of individual touch sensors TS1-TS4 or columns of touch sensors is as discussed with reference to **FIG. 3**C, except that either electrode **31** or **33** of each of touch sensors TS1-TS4 could be directly connected to input signals TSCSELECT1 or TSCSELECT2 and the other electrode **31** or **33** of each of touch sensors TS1-TS4 could be connected to AND gate AND through corresponding switch SW1 or SW2 of analog multiplexer AMP. The activation of light emitting devices L1-L4 can be independent of the activation of touch sensors TS1-TS4 or else can be synchronized, or dependent on the activation of touch sensors TS1-TS4. For instance, a logic circuit (not shown) could activate the light emitting device or devices underneath an activated (i.e., ready for use) individual touch sensor or group of touch sensors. Alternatively, a logic circuit (not shown) could activate the light emitting device or devices underneath an activated and touch stimulated touch sensor or group of touch sensors. Other logic schemes also are possible. The activation of light emitting devices L1-L4 can be controlled by input signals

LCSELECT1 and LCSELECT2 and LRSELECT1 and LRSELECT2 through AND gates AND3 and AND4. For instance, light emitting device L1 will be on, emitting light, when the output LRS1 of AND gate AND3 is high and input LCSELECT1 is low. In this state, current will flow through light emitting device L1, causing it to emit light. The drive circuit of **FIG. 5E** will be understood to be capable of activating either individual light emitting devices or columns or rows of light emitting devices.

[**0056**] FIGS. **5**F-**5**G are timing diagrams of the drive circuit of **FIG. 5**E, wherein the timing of the activation of both the touch sensor and light emitting devices are shown. In **FIG. 5**F, the timing of the drive circuit is as described above with respect to **FIG. 3C**. **FIG. 5F** further shows how output AND_OUT of AND gate AND responds to a user's touch. For instance, at times T1 and T5, touch sensor TS1 is activated and the input **61** of AND gate AND can correspond to the potential at either electrode **31** or **33** of touch sensor TS1. When touch stimulated, output AND_OUT is high for a shorter interval during time T1 than when not stimulated. The activation and stimulation of touch sensors T3-T4 is similar to that of touch sensor T1. Also, though not shown in **FIG. 5F, a** row or column of touch sensors can be activated simultaneously, just as can an individual touch sensor, as can be understood from the description of the drive circuit of **FIG. 5E**.

[**0057**] In **FIG. 5**G, when inputs LRSELECT1 and OSC are high, the output LRS1 of AND gate AND3 will be high. When input LCSELECT1 is low, output LCS1 of buffer B3 will be low. Thus, when inputs LRSELECT1 and LCSELECT1 are high, LRS1 will be high and LCS1 will be low, causing current to flow through light emitting device L1, which will be on and emit light, as shown at times T1 and T3 of **FIG. 5F**. The drive circuit of **FIG. 5E** is also capable of activating a column or row of light emitting devices. Thus, at times T2 and T4, inputs LRSELECT1, LRSELECT2 and OSC are high, making outputs LRS1 and LRS2 high as well, and input LCSELECT2 is high, making output LCS2 of buffer B4 low. The condition of the drive circuit at times T2 and T4 will cause current to flow through light emitting devices L3 and L4, causing them to emit light. Activation of a row of light emitting devices is not shown in **FIG. 5G** but will be understood from the description of the drive circuit of **FIG. 5E**.

[**0058**] FIGS. **6**A-**7**D illustrate an integrated light emitting touch sensor wherein the conductive layers of the light emitting device, namely anode **121** and cathode **123**, also function as electrodes of the touch sensor. FIGS. **6**A-**6**E illustrate a bottom-emitting integrated light emitting touch sensor. FIGS. **7**A-**7**D illustrate a top-emitting integrated light emitting touch sensor. **FIGS. 6A and 7A** show the separate layers of the integrated light emitting touch sensor, including anode **121**, emissive stack **22** and cathode **123**. Traces **36** and **37** are connected to anode **121** and cathode **123**, respectively. **FIGS. 6B and 7B** show how voltage source stimulus V_{input} can be connected through trace **37** to cathode **123** and how trace **36** can be a return line including resistor R_{output}. The layers of the integrated light emitting touch sensor are shown so that, in **FIGS. 6B and 6C**, anode **121** overlies emissive stack **22**, which overlies cathode **123**, whereas, in **FIGS. 7B and 7C**, cathode **123** overlies emissive stack **22**, which overlies anode **121**. **FIGS. 6C and 7C** show how the integrated light emitting touch sensors of **FIGS. 6B and 7B**, respectively, can be borne on substrate **20**.

[**0059**] In **FIG. 7**C, decorative layer **51** overlies the integrated light emitting touch sensor of **FIG. 7B**. As shown in **FIG. 7**D, decorative layer **51** can provide the capacitance C1 between anode **21** and surface **18** of decorative layer **51**, that might otherwise be provided by substrate **20**, as shown in **FIG. 6E**. The capacitance C1 of **FIG. 7D** could also be provided by a second substrate (not shown) overlying the integrated light emitting touch sensor. In both **FIGS. 6E and 7D**, capacitance C_{LED} exists between anode **121** and cathode **123**. **FIG. 6D** shows a schematic representation of the integrated light emitting touch sensors of **FIG. 6B**.

[**0060**] **FIG. 8A** illustrates a possible drive circuit for the integrated light emitting touch sensors of FIGS. **6**A-**7**D. **FIG. 8B** is a timing diagram for the drive circuit of **FIG. 8A**. The drive circuit of **FIG. 8A** advantageously requires only four address lines to control the touch sensor and light activation and operation of the entire matrix. Minimizing the number of address lines conserves space on the substrate that bears the integrated light emitting touch sensors and also reduces the complexity of the manufacturing process. The touch sensor function of integrated light emitting touch sensors TL1 and TL2 is activated when output CS1 of AND gate AND5 is high, which occurs when the inputs of AND gate AND5, namely, oscillating signal OSC and CSELECT1, are both high. The analog multiplexer AMP, including switches SW1 and SW2, controls whether the potential at one or the other or both of integrated light emitting touch sensors TL1 and TL2 become input **61** of AND gate AND, the output AND_OUT of which forms the touch sensor response output of the matrix of integrated light emitting touch sensors. Inputs LSELECT1 and LSELECT2 control active devices M5 and M6, which in turn control the light producing current through the integrated light emitting touch sensors, such that, for example, when LSELECT1 is low, active device M5 is biased on and RS1 is high. Capacitance $C_{isolate}$ can isolate AND gate AND from the effects of the light emitting operation of the drive circuit. As discussed above, although active devices M5 and M6 are shown as PMOS devices, NMOS, bipolar or other active devices can also be used.

[**0061**] According to **FIG. 8**A and the timing chart of **FIG. 8**B, at time T1, inputs oscillating signal OSC and CSELECT1 are both high causing output CS1 of AND gate AND5 to be high. Also at time T1, inputs LSELECT1 and LSELECT2 are both high, causing active devices M5 and M6 to be in high impedance mode, thus activating the integrated light emitting touch sensors TL1 and TL2. When input TRSELECT1 is high, switch SW1 will close and allow the signal from anode **121** of integrated light emitting touch sensor TL1 to reach AND gate AND, whose output AND_OUT is the response output of the drive circuit. Similar requirements exist for the activation of other individual integrated light emitting touch sensors or rows or columns thereof. As shown in **FIG. 8**B, when there is a touch stimulus to integrated light emitting touch sensor TL1, response output AND_OUT will persist for a relatively smaller portion of time T1 than when there is no stimulus. Stimulation of the other integrated light emitting touch sensors produces a similar response at response output AND_OUT. To activate the light emitting properties of

integrated light emitting touch sensor TL1, output CS1 of AND gate AND5 must be low and input RS1 must be high. Under these conditions, current can flow from the anode to the cathode of the integrated light emitting touch sensors, causing them to emit light. As can be understood from **FIG. 8**B, active device M5 will be biased when its gate potential is lower than its source, as will occur when input LSELECT1 is low. When biased on, active device M5 will allow current to flow from anode **121** to cathode **123** of integrated light emitting touch sensor TL1. Integrated light emitting touch sensors TL2-TL4 operate in a similar manner. As can be understood from the drive circuit of **FIG. 8**A and the timing diagram of **FIG. 8**B, rows and columns of integrated light emitting touch sensors can be lit simultaneously as well. The timing diagram of **FIG. 8B** shows how the light emitting properties of the integrated light emitting touch sensors is synchronized. As discussed above, inputs CSELECT1, CSELECT2, TRSELECT1, TRSELECT2, LSELECT1 and LSELECT2 can be controlled by a logic circuit (not shown) to make the two modes of the system dependent on one another in any manner required for the particular application.

[**0062**] FIGS. **9**A-**9**D illustrate the separate layers and construction of a touch switch with an integrated control circuit according to FIGS. **4**A-**4**B physically integrated with, but electrically separate from, a bottom-emitting light emitting device. **FIG. 9A** shows the separate layers of the light emitting device, including anode **21**, emissive stack **22** and cathode **23**. Traces **36** and **37** connect to anode **21** and cathode **23**, respectively. Anode **21** is preferably transparent to allow light from emissive stack **22** to reach surface **19** of substrate **20**, but can be otherwise, as discussed above. **FIG. 9C** shows the touch switch with integrated control circuit of FIGS. **4**A-**4**B, including electrode **31**, integrated control circuit **32**, electrode **33**, trace **34** connecting electrode **31** to integrated control circuit **32** and trace **35** connecting electrode **33** to integrated control circuit **32**. **FIGS. 9B and 9D** show how the separate layers of **FIGS. 9A and 9C** are integrated. **FIG. 9D** shows how the integrated assembly of **FIG. 9B** can be borne on substrate **20**. Insulating layer **50** separates the touch sensor components of the touch switch assembly of **FIG. 9C** from the light emitting device and could also serve a decorative function. At least a portion of insulating layer **50** and substrate **20** should be transparent or translucent in order to allow light to pass therethrough from the light emitting device to surface **19**.

[**0063**] **FIG. 9E** shows a possible drive circuit for the touch switch with integrated control circuit and integrated light emitting device of FIGS. **9**A-**9**D arranged in a two-by-two matrix. As will be understood from **FIG. 9**E and from the preceding discussion, inputs of the drive circuit can be controlled by a logic circuit (not shown) to make the activation and operation of the touch switches and light emitting devices of the matrix behave dependently. The drive circuit of **FIG. 9E** includes buffers B2-B7 connected to inputs TRSELECT1, TRSELECT2, LRSELECT1, LRSELECT2 and outputs TCRETURN1 and TCRETURN2, respectively, and active devices M7 and M8, the gates of which are connected to LCSELECT1 and LCSELECT2, respectively. Inputs TRSELECT1 and TRSELECT2 control the activation of touch switch with integrated control circuit assemblies TSA1-TSA4. Outputs TCRETURN1 and TCRETURN2 respond to changes induced in the touch sensors of the touch switch with integrated control circuit assemblies TSA1-TSA4.

[**0064**] As shown in the timing diagram of **FIG. 9**F, touch switch with integrated control circuit assemblies TSA1 and TSA3 are activated, receiving signals and can respond to stimuli to the electric fields about their electrodes when TRS1 of buffer B2 is high, activating the integrated control circuits **32** and touch sensors of touch switch with integrated control circuit assemblies TSA1 and TSA3. The output of the integrated control circuits **32** of the touch switch with integrated control circuit assemblies can involve a low voltage when the respective touch switches are not stimulated and a high voltage when they are. Outputs TCR1 and TCR2 can develop a current across resistors $R_{output1}$, and $R_{output2}$ that can be sent through buffers B6 and B7 to outputs TCRETURN1 and TCRETURN2 and ultimately to an end device.

[**0065**] Light emitting devices L1-L4 receive inputs LRS1, LRS2, from buffers B4 and B5, respectively, and inputs LCS1 and LCS2 from active devices M7 and M8. Light emitting device L1 will turn on and emit light at time T1 when, as shown in **FIG. 9**F, output LRS1 of buffer B4 is high, i.e., when input LCSELECT is high, and input LCS1 is low. In this condition, active device M7 will be biased on and provide a current path from anode **21** to cathode **23** of light emitting device L1. It will be understood, as discussed above and from **FIGS. 9E and 9F**, how other light emitting devices or rows or columns of light emitting devices can be similarly activated. Though the activation and operation of the touch switch with integrated control circuit and light emitting device assemblies is shown as being synchronized in **FIG. 9**F, other methods of activating and operating the assemblies and devices are possible.

[**0066**] FIGS. **10**A-**10**E illustrate the separate layers and construction of a bottom-emitting integrated light emitting touch switch with integrated control circuit assembly wherein the inner electrode **121** of the touch switch with integrated control circuit assembly is a conductive layer of the light emitting device. **FIG. 10A** shows the separate layers of the integrated light emitting touch switch with integrated control circuit, including anode **121**, emissive stack **22** and cathode **23**. **FIG. 10C** shows the touch switch with integrated control circuit assembly, including anode **121**, electrode **33** and integrated control circuit **32**. **FIG. 10B** shows the layers assembled into an integrated light emitting touch switch with integrated control circuit assembly. In **FIG. 10**B, traces **36**, **37** and **35** connect anode **121**, cathode **23** and electrode **33**, respectively, to integrated control circuit **32**. **FIG. 10D** shows a cross-section view of how the integrated light emitting touch switch with integrated control circuit assembly can be borne on substrate **20**. In **FIG. 10**D, anode **121** overlies emissive stack **22**, which in turn overlies cathode **23**. Electrode **33** is borne on substrate **20** substantially surrounding the integrated light emitting touch switch with integrated control circuit assembly. **FIG. 10E** shows a schematic representation of capacitance C1 at surface **19** of substrate **20** and capacitance C_{LED} between anode **121** and cathode **23**. Integrated control circuit **32** of **FIG. 10B** can control the activation and operation of the touch switch and light emitting layers **22** of the integrated light emitting touch switch assembly. The integrated light emitting touch switch assembly of **FIG. 10B** can form a low impedance touch sensing device. Anode **121** is preferably, though not neces-

sarily, transparent. The integrated light emitting touch switch with integrated control circuit assembly of FIGS. **10A-10E** can be controlled by the control circuit depicted in FIGS. **11A-11B**.

[**0067**] FIGS. **11A-11B** show schematic representations of control circuits capable of controlling the integrated light emitting touch switch with integrated control circuit assemblies of **FIG. 10**. In FIGS. **11A-11B**, integrated control circuit **32** produces a differential response output through logic and decision circuit **40** and latch circuit **41**. In **FIG. 11A**, oscillating signal OSC from logic and decision circuit **40** activates electrodes **121** and **33** through the buffering configuration of active devices M14 and M15 and through electrodes R_{inner} and R_{outer}, respectively. Anode **121** is activated by oscillating signal OSC through the relatively large coupling capacitance of light emitting device LED. Active device M13 is shown connected to logic and decision circuit **40**, to anode **121** of light emitting device LED through resistance R_{LED1} and to chip select signal VDD. Active device M12 is shown connected to cathode **23** of light emitting device LED through resistance R_{LED2}, diode D1 and active device M14. During the touch sensing operation of the control circuit, active devices M13 and M12 are unbiased and in a non-conducting high impedance state and the operation of the control circuit is similar to the operation of the control circuits described with reference to **FIG. 4C** and in U.S. Pat. No. 6,320,282. During the LED drive operation of the control circuit, active devices M14, M13 and M12 will be biased on, conducting and low impedance, and chip select signal VDD will be applied to the source of active device M13, allowing current to flow with low impedance through resistance R_{LED1}, anode and cathode **21** and **23** of light emitting device LED and resistances R_{inner} and R_{LED2}. The current flowing through light emitting device LED will cause it to emit light.

[**0068**] **FIG. 11B** shows how oscillating signal OSC can drive anode **121** directly, instead of through the relatively large coupling capacitance of light emitting device LED. The control circuit of **FIG. 11B** includes active device M13, connected to logic and decision circuit **40**, chip select signal VDD and anode **121** and active device M20, connected to logic and decision circuit **40** and to cathode **23** of light emitting device LED through resistance R_{LED1}. Also, capacitance C_{block} can isolate the touch sensing circuit from DC current through light emitting device LED during LED drive operation of the drive circuit. Optional active device M21 can provide an AC ground for the touch sensor. The control circuit of **FIG. 11B** works as does the drive circuit of **FIG. 11A** during touch sensing operation. During LED drive operation, active devices M20, M13 and M12 will be biased on, conducting and low impedance, and chip select signal VDD will be applied, allowing current to flow through light emitting device LED and resistances R_{LED1} and R_{LED2}. In both **FIGS. 11A and 11B**, current can be limited by altering the values of the various resistances and characteristics of the active devices. Although PMOS or NMOS devices have been shown in certain locations within the control circuit, it will be understood that other devices, including bipolar devices, could be used as well. **FIG. 13F** illustrates a timing diagram that can correspond to the operation of a matrix of touch sensors with integrated control circuits **32** like the one depicted in **FIGS. 11A** or **11B**.

[**0069**] FIGS. **12A-12E** illustrate the separate layers and construction of a bottom-emitting integrated light emitting touch switch with integrated control circuit assembly wherein the single electrode **121** of the touch switch assembly is a conductive layer of the light emitting device. **FIG. 12A** shows the separate layers of the integrated light emitting touch sensor, including anode **121**, emissive stack **22** and cathode **123**. Trace **37** can connect cathode **123** to integrated control circuit **32**, as shown in **FIG. 12B**. **FIG. 12C** shows the touch sensor including anode **121** and trace **36** connecting anode **121** to integrated control circuit **32** in single electrode mode. **FIG. 12B** shows how the separate layers can be assembled to form an integrated light emitting touch switch with integrated control circuit assembly. **FIG. 12D** shows a cross-section view of how the assembly of **FIG. 12B** can be borne on substrate **20**. In **FIG. 12D**, anode **121** overlies emissive stack **22**, which overlies cathode **123**. **FIG. 12E** shows a schematic representation of capacitance C1 between surface **19** of substrate **20** and capacitance C_{LED} between anode **121** and cathode **123**. Integrated control circuit **32** of **FIG. 10B** can control the activation and operation of the touch switch and light emitting layers of the integrated light emitting touch switch assembly. The integrated light emitting touch switch assembly of **FIG. 10B** can form a low impedance touch sensing device. Anode **121** is preferably, though not necessarily, transparent. Also, at least a portion of substrate **20** should be transparent or translucent to allow light to pass therethrough from the light emitting device to surface **19**.

[**0070**] FIGS. **13A-13D** illustrate the separate layers and construction of a top-emitting integrated light emitting touch switch with integrated control circuit assembly wherein the single electrode **121** of the touch switch assembly is a conductive layer of the light emitting device. FIGS. **13A-13D** are as described with reference to FIGS. **12A-12D**, except that anode **121**, emissive stack **22** and cathode **123** of the FIGS. **13A-13D** embodiment are borne on surface **19** of substrate **20** and covered by decorative layer **59**, while integrated control circuit **32** is borne on the other side of substrate **20**, opposite surface **19**, and connected to anode **121** and cathode **123** through substrate **20** via traces **36** and **37**, respectively. To accommodate traces **36** and **37**, substrate **20** can, but need not, include cutout sections or can be formed around the traces during manufacture of the touch switch with integrated control circuit assembly. Traces **36** and **37** also could be connected to integrated control circuit **32** using separate traces built into substrate **20**. As discussed above, decorative layer **59** could be replaced by a second substrate (not shown) and can include transparent areas to allow light from emissive stack **22** to reach the user of the integrated light emitting touch switch with integrated control circuit assembly.

[**0071**] The activation and operation of a two-by-two matrix of the integrated light emitting touch switch with integrated control circuit assemblies of FIGS. **12A-13D** can be controlled by the drive circuit of **FIG. 13E** according to the timing diagram of **FIG. 13F**. Other drive circuits and timing schemes also can be used. The drive circuit of **FIG. 13E** advantageously requires only four address lines, which, as discussed above with respect to **FIG. 8A**, conserves space and reduces the complexity of the touch switch matrix configuration and its manufacture. The drive circuit of **FIG. 13E** includes inputs CS1 and CS2, which control the touch switch activation of columns of integrated light emitting

touch switch with integrated control circuit assemblies within the matrix, and inputs LEDSEL1 and LEDSEL2, which control the light activation of rows of integrated light emitting touch switch assemblies. Returns RS1 and RS2 are touch switch response outputs of the integrated control circuits **32** of the two rows of integrated light emitting touch switch assemblies. Buffers B9-B10 buffer the input signals and buffers B11-B12 buffer the response output signals. Active devices M10 and M11 can be biased on by inputs LEDSEL1 and LEDSEL2 to allow current to flow from the anode through the emissive layers and to the cathode of the integrated light emitting touch switch with integrated control circuit assemblies TL1-TL4 to produce light. The signals of the timing diagram of **FIG. 13F** are shown synchronized, but as discussed above, could be otherwise. At time T1, the touch sensor function of integrated light emitting touch switch assemblies TL1 and TL2 is activated because input CS1 is high. The touch sensor function of integrated light emitting touch switch with integrated control circuit assemblies TL3 and TL4 is not activated because input CS2 is low. Thus, at time T1, either one or both of integrated light emitting touch switch with integrated control circuit assemblies TL1 and TL2 could relay a touch stimulated signal to response output RS1 or RS2, respectively.

[**0072**] At time T5, integrated light emitting touch switch with integrated control circuit assembly TL1 emits light and its touch sensor function is activated because input CS1 is high at times T4 and T5. Also, input LEDSEL1 is high and consequently active device M10 is biased on, allowing current to flow through it.

[**0073**] The touch sensor and light activation of the other integrated light emitting touch switch with integrated control circuit assemblies is similar to the activation of integrated light emitting touch switch with integrated control circuit assembly TL1. It will be understood for **FIGS. 13E and 13F** that rows and columns of integrated light emitting touch switch with integrated control circuit assemblies can also act as touch switches and emit light as well. The touch sensor operation and light emission of the integrated light emitting touch switch with integrated control circuit assemblies of **FIG. 13E** are therefore shown synchronized such that an integrated light emitting touch switch with integrated control circuit assembly will emit light only when touch stimulated. Other patterns of activation could also be advantageous as discussed above.

[**0074**] FIGS. **14A-14C** illustrate the separate layers and construction of a bottom-emitting touch switch with integrated control circuit assembly according to the present invention including a touch switch with integrated control circuit assembly of FIGS. **5A-5B** and an integrated light emitting device. **FIG. 14A** shows the separate layers of the light emitting device and the touch sensor, including anode **21**, emissive stack **22**, cathode **23** and electrode **31**. **FIG. 14B** shows how the separate layers can be assembled and connected through traces **34**, **36** and **37** to integrated control circuit **32**. **FIG. 14C** shows a cross-section view of how the assembly of **FIG. 14B** can be borne on substrate **20**. In **FIGS. 14B and 14C**, electrode **33** is shown overlying anode **21**, which in turn overlies emissive stack **22** and cathode **23**. Insulating layer **50** separates electrode **31** from the layers of the light emitting device. Insulating layer **51** is preferably transparent and can be SiO_2 or any other suitable dielectric material. Electrode **31** and anode **21** are also preferably transparent but, as described above, need not be. As shown in FIGS. **14A-14C**, electrode **31** and anode **21** could be smaller than emissive stack **22**, allowing the light emitting device to form a border or halo around even a non-transparent electrode **31** or anode **21**. Thus, in certain applications, a transparent electrode and anode need not be used. A possible control circuit for the integrated light emitting touch switch assembly of **FIG. 14C** is described with reference to FIGS. **15C-15D**.

[**0075**] FIGS. **15A-15B** show schematic representations of possible control circuits capable of controlling the integrated light emitting touch switch with integrated control circuit assemblies of **FIGS. 12D and 13D**, involving anode **121**. Anode **121** in FIGS. **15A-15B** is connected to integrated control circuit **32** as described with reference to FIGS. **11A-11B**. Here, resistance R_{inner} has been renamed R_{touch}, because the integrated light emitting touch switch with integrated control circuit assemblies of **FIGS. 12D and 13D** do not include inner and outer electrodes. During the touch sensing operation of the control circuit, active devices M12 and M13 will be unbiased, nonconducting and high impedance, and the control circuit will operate in a manner similar to the manner described with reference to FIGS. **11A-11D**, except that logic and decision circuit **40** will have only one input and therefore will not provide a differential output to latch circuit **41**. **FIG. 15B** shows a control circuit capable of activating anode **121** directly and not through the relatively large coupling capacitance of light emitting device LED. During LED drive operation, the control circuit of **FIG. 15B** operates as described with reference to **FIG. 11B**.

[**0076**] **FIG. 15C** illustrates a schematic representation of a possible control circuit capable of controlling the integrated light emitting touch switch with integrated control circuit assembly of **FIG. 14C**. During touch sensing operation, the control circuit of **FIG. 15C** works as described above with reference to **FIG. 15B**. Also, during touch sensing operation there is no DC path for current flow through light emitting device LED, other than leakage current, for this control circuit. During light emitting device LED drive operation, capacitance C3 between electrode **31** and anode **21** isolates the touch switch operation circuitry from the current of the LED drive operation of the circuit. As shown in **FIG. 14C**, capacitance C3, represented schematically in **FIG. 15C**, is provided by isolating layer **50**, which may be any suitable material including SiO_2.

[**0077**] **FIG. 15D** illustrates a schematic representation of a possible control circuit capable of controlling the integrated light emitting touch switch assembly shown generally in **FIG. 14C**, but further including an outer electrode **33**. The control circuit in **FIG. 15D** works as described above with reference to **FIG. 15C**, except that electrode **33**, active devices M18 and M19 and resistance R_{outer} provide input to logic and decision circuit **40**, which can be capable of providing a differential output to latch circuit **40**.

[**0078**] **FIG. 16A** shows the electrodes **31** and **32** and traces **34** and **35** of a touch pad. FIGS. **16B-16J** show light emitting devices LEDV, which can be, for example, inorganic semiconducting diodes, having anode **21**, emissive junction **22** and cathode **23** coupled to electrodes **31** and **33** of the touch pad of **FIG. 16A** at anode **21** and cathode **23**, respectively. The configurations depicted in FIGS. **16B-16J** show how inorganic semiconducting diodes and other light

emitting devices can, according to the present invention, be located in various locations relative to the touch pad with which they are coupled, including remote from the electrodes of the touch pad. Such configurations can provide flexibility in the design of integrated light emitting touch sensor devices and can at the same time offer simple addressing schemes, as shown in **FIG. 19**, described below. In **FIG. 16**B, light emitting device LEDV is oriented between electrodes **31** and **33** so that light can reach surface **19** of substrate **20** without having to pass through either electrode **31** or **33**. Thus, electrodes **31** and **33** need not be transparent to allow light to reach surface **19** of substrate **20**, shown in **FIG. 16B**. To allow light from light emitting device LEDV to reach surface **19**, substrate **20** is preferably transparent. FIGS. **16**C-**16**J, like **FIG. 16**B, each illustrate touch switches where a light emitting device is coupled with the touch detection electrodes **31** and **33** but is neither atop nor underneath them, allowing light emitted from light emitting device LEDV to reach surface **19** and obviating the need for transparent electrodes.

[**0079**] In **FIGS. 16C and 16D**, emissive stack **22** of light emitting device LEDV is located between electrode **31** and electrode **33**. Anode **21** and cathode **23** are coupled to electrode **31** and electrode **33** in **FIG. 16**C, and vice versa in **FIG. 16D**. Anode **21** and cathode **23** could also be directly composed of electrode **31** or electrode **33**, eliminating the need from small circuit traces or integration of the electrodes. In **FIGS. 16E and 16F**, light emitting device LEDV is located remote from electrodes **31** and **33** and anode **21** and cathode **23** are coupled to electrodes **31** or **33** through traces **34** and **35**. Electrodes **31** and **33** could be coupled to a control circuit (not shown) either through traces **34** and **35** as well or through other, separate traces (not shown). In **FIGS. 16G and 16H**, each touch switch has four light emitting devices LEDV located between electrode **31** and electrode **33**. In **FIG. 16**G, traces **58** connect anode to electrode **31**, where in **FIG. 16**H, traces **58** connect cathode **23** to electrode **31**. In **FIGS. 16I and 16J**, electrode **31** has a notch **52** that accommodates light emitting device LEDV. In **FIG. 16**I, anode **21** is coupled to electrode **31** and cathode **23** is coupled to electrode **33** through trace **57**, where in **FIG. 16**J, cathode **23** is coupled to electrode **31** and anode **21** is coupled to electrode **33** through trace **57**. In both **FIGS. 16I and 16J**, notch **52**, and consequently light emitting device LEDV, is shown located in the center of electrode **31**. Other such configurations and variations on the configurations shown in these drawings are possible as well.

[**0080**] In addition to obviating the need for transparent electrodes, configurations according to this embodiment of the present invention (where a light emitting device LEDV is alongside the electrodes of a touch pad) can also provide other benefits. For instance, light emitted from light emitting devices LEDV in FIGS. **16**E-**16**F can reach surface **19** at a location remote from the electrodes of the touch pad while also being integrated according to the principles of the present invention. FIGS. **17**A-**17**J illustrate the configurations of **FIG. 16**A-**16**J where the touch switches also include an integrated control circuit **32** proximate the touch detection electrodes **31** and **33**.

[**0081**] FIGS. **18**A-**18**D illustrate a touch switch with integrated control circuit where light emitting device LEDV and an aperture **53** in touch detection electrode **31** are aligned with window **54** in substrate **20**. In **FIG. 18**D, showing a cross-section view of the assembled touch switch with integrated control circuit and light emitting device, decorative layer **51** is disposed on substrate **20** atop electrodes **31** and **33**. Decorative layer **51** is preferably either transparent or translucent, at least in an area aligned with light emitting device LEDV and window **54**, to allow light from light emitting device LEDV to reach surface **18** of decorative layer **51**. **FIG. 18A** shows electrodes **31** and **33** coupled to traces **34** and **35**, respectively. In **FIG. 18**A, electrode **31** includes aperture **53**. **FIG. 18B** shows integrated control circuit **32** coupled to traces **34** and **35**. In **FIG. 18**B, trace **35** is also coupled to light emitting device LEDV. **FIGS. 18C and 18D** show the configurations of **FIGS. 18A and 18B** assembled together. In **FIGS. 18C and 18D**, aperture **53** is shown aligned with light emitting device LEDV. In **FIG. 18**D, substrate **20** is shown with window **54**, which is also aligned with light emitting device LEDV. Window **54** is preferably also either translucent or transparent to allow light from light-emitting device LEDV to reach surface **18** of decorative layer **51**. Alternatively, substrate **20** could be entirely translucent or transparent in place of incorporating window **54** into substrate **20**. The touch switch depicted in **FIG. 18D** also has decorative layer **51**, which can have a translucent portion (not shown) aligned with window **54** of substrate **19** or can be completely translucent and the like. Since electrodes **31** and **33** are on side **19** of substrate **20** opposite the side bearing integrated control circuit **32** and light emitting device LEDV, traces **34** and **35** must penetrate substrate **20** to be coupled to electrodes **31** and **33** as well as integrated control circuit **32** and light emitting device LEDV.

[**0082**] **FIG. 19** illustrates an arrangement of four touch pads electrically coupled to four light emitting devices. In **FIG. 19**, light emitting devices LEDV1-LEDV4 are coupled to touch pads TP1-TP4, respectively, and both touch pads TP1-TP4 and corresponding light emitting devices LEDV1-LEDV4 are coupled to input/output pins P1-P4, respectively, which in turn can be coupled to an integrated control circuit (not shown). As shown in **FIG. 19**, light emitting devices LEDV1-LEDV4 can be remote from the touch pads of a touch switch and can at the same time be integrated according to the present invention.

[**0083**] **FIGS. 20A and 20B** depict a touch switch having an electroluminescent device borne on substrate **20** including electrodes **221** and **223** separated from electroluminescent layer **122** by insulating layers **150**. In **FIG. 20**B, an alternating current source AC is coupled to electrodes **221** and **223**. Electrode **221** is preferably either transparent or translucent to allow light from the electroluminescent device to reach surface **19** of substrate **20**. The lighting operation of the electroluminescent device will be understood by those skilled in the art of electroluminescent devices. Also shown schematically in **FIG. 20B** are capacitances C_{touch} and C_{AC}, which represent the capacitance across substrate **20** and across the electroluminescent device including insulating layers **150** and electroluminescent layer **122**, respectively.

[**0084**] **FIG. 21A** illustrates a possible configuration of inputs to and outputs from a logic circuit **40** for the touch switch with integrated electroluminescent device of FIGS. **20**A-**20**B. In **FIG. 21**A, surface **19** and electrodes **221** and **223** form capacitances C_{touch} and C_{AC}, as also shown in **FIG. 20B**. Electrode **221** is coupled through trace DRIVE 2 to the drains of active devices M33 and M34, the gates of

which are coupled to outputs DRIVE 2H and DRIVE 2L, respectively, of **20** logic circuit **40**. Electrode **223** is coupled through outputs DRIVE 1 to the drains of active devices M31 and M32, the gates of which are coupled to outputs DRIVE 1H and DRIVE 1L, respectively, of logic and decision circuit **40**. Electrode **221** is also coupled to input RETURN 1 and to resistance R1, which is coupled to the drain of active device M40, the gate of which is coupled to output SELECT 1 of logic and decision circuit **40**. **FIG. 21B** illustrates a timing diagram for the configuration in **FIG. 21A**. Electrodes **221** and **223** receive alternating current signals from signal source AC (shown in **FIG. 20B**), which, in **FIG. 21**A, can originate in logic and decision circuit **40** and is communicated on traces DRIVE 1H, DRIVE 1L, DRIVE 2H and DRIVE 2L. The operation of the buffering configurations of active devices M31 and M32 and active devices M33 and M34, will be understood to allow an alternating current to develop on traces DRIVE 1 and DRIVE 2 when appropriately signaled by logic and decision circuit **40**. **FIG. 21B** shows how the signals on traces DRIVE 1 and DRIVE 2 are opposite one another such that when the signal on trace DRIVE 1 is high, the signal on trace DRIVE 2 is low, and vice versa.

[**0085**] The light emitting electroluminescent device depicted in **FIG. 20B** can function as a touch switch when configured and signaled as shown in FIGS. **21**A-**21**B. Trace DRIVE 1 will be high when output DRIVE 1H is high, biasing on active device M31 and allowing voltage PLUS to appear on trace DRIVE 1. When output SELECT 1 of logic and decision circuit **40** is high, as shown in **FIG. 21**B, active device M40 will allow current to pass through resistance R1 such that a voltage will develop on input RETURN 1. Also, when output SELECT 1 is high, the no signal appears on trace DRIVE 2. The voltage appearing on input RETURN 1 will be one value when no stimulus appears at surface **19** and a lower value when a stimulus does appear at surface **19**. Specifically, a stimulus at surface **19** will increase the effective capacitance C_{touch} and shunt to ground current that would otherwise develop a high voltage across resistance R1. This increased effective capacitance and shunting to ground will correspond to a smaller voltage associated with the stimulated state on trace DRIVE 2 and input RETURN 1 than would develop if there were no stimulus and no increased capacitance. This is shown in **FIG. 21B**. The configuration of **FIG. 21**A and the timing shown in **FIG. 21B** are illustrative only. Other configurations and other timing patterns, using either the configuration of **FIG. 21A** or another configuration, are possible as well, and will be understood by those skilled in the art of circuit design.

[**0086**] **FIG. 22A** illustrates a possible configuration of the input lines of a logic circuit for a two-by-two matrix of electroluminescent light emitting touch switches. In **FIG. 22**A, four electroluminescent touch switches ELTS1-ELTS4 are arranged in a two-by-two matrix and coupled through buffering devices including active devices M31-M38 to logic and decision circuit **40**. Each electroluminescent touch switch operates in a manner similar to the manner described with reference to **FIGS. 21A and 21B**. **FIG. 22B** illustrates a timing diagram for the configuration in **FIG. 22A**. The configuration in **FIG. 22**A and the timing diagram of **FIG. 22B** illustrate how either one of two electroluminescent touch switches ELTS1-ELTS4 in a two touch switch column can create a signal on an input line RETURN 1 or RETURN 2 asscoiated with a stimulated state of the column. For instance, either touch switch ELTS2 or ELTS4 can be stimulated, shunt current and reduce the voltage on input RETURN 2, coupled to resistance R2 coupled to the drain of active device M41, when output SELECT 2 is high, as shown in **FIG. 22B**. For a stimulus to touch switch ELTS2 to create a reduced voltage on input RETURN 2, trace DRIVE 1 must be high and creating a potential on electrode **223** of touch switch ELTS2. For a stimulus to touch switch ELTS4 to create such a reduced voltage on input RETURN 1, trace DRIVE 2 must be high. As discussed above, other configuration or timing schemes are possible as well, as will be understood from the foregoing description.

[**0087**] **FIG. 23** illustrates a touch switch with a liquid crystal integrated light emitting device that can replace the electroluminescent touch switches in the schematics of **FIGS. 21A and 22A**. In **FIG. 23** alternating signal source AC is coupled to electrodes **221** and **223**, which are on either side of liquid crystal layer **222** and are supported by spacers **64**. Glass layer **60** and polarizer layer **62** are, in turn, on the outermost side of electrodes **221** and **223**. Electrodes **221** and **223** form capacitance C_{AC} and topmost glass and polarizer layers **60** and **62** form capacitance C_{touch}. The light emitting operation of the liquid crystal light emitting device of **FIG. 23** will be understood by those skilled in the art and the touch switch operation will be understood from the foregoing description of FIGS. **21**A-**22**B.

[**0088**] Although some embodiments of the present invention have been described and illustrated using only one specific type of touch sensor, e.g., a touch sensor with integrated control circuit, it will be understood that any embodiment of the present invention can be used in conjunction with any type of touch switch. Moreover, the various aspects of the present invention described above can be combined in any way according to the requirements of the application for which the touch sensor is intended. The invention may also be embodied in other forms not explicitly depicted in a drawing without departing from its spirit or essential character. The described embodiments are to be considered in all respects only as illustrative and not restrictive. The scope of the invention is indicated by the appended claims rather than by the foregoing description. All changes which come within the meaning and range of equivalency of the claims therefore are to be embraced within that scope.

What is claimed is:

1. A selectively self-illuminating switching apparatus, comprising:

a touch responsive switching device adapted to provide an electrical response in response to an external stimulus;

a light emitting device electrically coupled to said touch responsive switching device.

2. The apparatus of claim 1 wherein said touch responsive switching device comprises at least one electrode and wherein said light emitting device is electrically coupled to said at least one electrode.

3. The apparatus of claim 2 wherein said touch responsive switching device further comprises at least one active component electrically coupled to said at least one electrode.

4. The apparatus of claim 2 wherein said touch responsive switching device further comprises at least one integrated control circuit electrically coupled to said at least one electrode.

5. The apparatus of claim 2 wherein said light emitting device further comprises at least one electrode and wherein said at least one electrode of said light emitting device comprises said at least one electrode of said touch responsive switching device.

6. A selectively self-illuminating switching apparatus, comprising:

a substrate;

a touch responsive switching device disposed on said substrate;

said touch responsive switching device adapted to provide an electrical response in response to an external stimulus;

said touch responsive switching device comprising at least one electrode;

a light emitting device disposed on said substrate; and

a dielectric separating said light emitting device from said touch responsive switching device.

* * * * *