TRANSCRIPT MARKED CONFIDENTIAL

IN THE UNITED STATES DISTRICT COURT
FOR THE EASTERN DISTRICT OF TEXAS
MARSHALL DIVISION

PICTIVA DISPLAYS INTERNATIONAL LTD., Plaintiff,	
vs.	Civil Action No. 2:23-cv-00495-JRG
SAMSUNG ELECTRONICS CO., LTD., SAMSUNG ELECTRONICS AMERICA, INC., Defendants.	

ZOOM VIDEOTAPED DEPOSITION OF FRED SCHUBERT
Troy, New York
Wednesday, December 11, 2024
Volume I

Reported by:
LORI M. BARKLEY
CSR No. 6426
Job No. 7046685
PAGES 1 - 171

Pictiva EX2016
Samsung v Pictiva
IPR2024-01095

IN THE UNITED STATES DISTRICT COURT
FOR THE EASTERN DISTRICT OF TEXAS
MARSHALL DIVISION

PICTIVA DISPLAYS INTERNATIONAL LTD.,	
Plaintiff,	
vs.	Civil Action No. 2:23-cv-00495-JRG
SAMSUNG ELECTRONICS CO., LTD., SAMSUNG ELECTRONICS AMERICA, INC.,	
Defendants.	

Zoom Videotaped deposition of Fred Schubert, Volume I, taken on behalf of Plaintiff, at Troy, New York, beginning at 9:51 a.m. and ending at 6:29 p.m. on Wednesday, December 11, 2024, before LORI M. BARKLEY, Certified Shorthand Reporter No. 6426.

Pictiva EX2016
Samsung v Pictiva
IPR2024-01095

APPEARANCES:

IRELL & MANELLA LLP
BY: Rebecca Carson
Attorney at Law
840 Newport Center Drive, Suite 400
Newport Beach, CA 92660
949-760-0991
Rcarson@irell.com

QUINN EMANUEL URQUHART & SULLIVAN, LLP
BY: Melissa Bailey
Attorney at Law
50 California Street, 22nd Floor
San Francisco, California 94111
415-875-6336
MELISSABAILY@quinnemanuel.com

Videographer: JoAnn Yager

I N D E X

WITNESS
FRED SCHUBERT

	PAGE
Examination by Ms. Carson	6

EXHIBITS

NUMBER	DESCRIPTION	PAGE
Exhibit 1	Schubert Declaration	7
Exhibit 2	'223 Patent	49
Exhibit 3	Petition For Inter Partes Review of Patent '223	50
Exhibit 4	'389 Patent	67
Exhibit 5	Patent '433, the Fujii Reference	80
Exhibit 6	Patent Application Publication Number US2002/0140347	86
Exhibit 7	July 19, 2004 Response by Applicants	94
Exhibit 8	'164 Patent	105
Exhibit 9	Japanese Patent Application Gazette, Published April 20, 2001	113
Exhibit 11	'547 Patent	135
Exhibit 12	'492 Patent	161

Pictiva EX2016
Samsung v Pictiva
IPR2024-01095

Troy, New York; Wednesday, December 11, 2024

9:51 a.m.

VIDEO OPERATOR: Good morning. We are on 07:51:09
the record at 9:51 a.m. on December 11th, 2024. 07:51:10
Please note that this deposition is being 07:51:17
conducted virtually. Quality of the recording 07:51:20
depends on the quality of camera and internet 07:51:23
connection of participants. 07:51:28
What is seen from the witness and heard on 07:51:29
screen is what will be recorded. Audio and video 07:51:31
recording will continue to take place unless all 07:51:34
parties agree to go off the record. 07:51:38
This is media number one of the recorded 07:51:39
deposition of Dr. E. Frank Schubert in the matter of 07:51:43
Pictiva Displays International LTD versus Samsung 07:51:48
Electronics Company LTD, filed in the United States 07:51:52
District Court for the Eastern District of Texas, 07:51:56
Marshall Division. Case number 2:23-cv-00495-JRG. 07:51:59
This deposition is being conducted remotely 07:52:11
using virtual technology. My name is JoAnn Yager, 07:52:13
representing Veritext Legal Solutions and I'm the 07:52:17
videographer. The court reporter is Lori Barkley 07:52:22
from the firm Veritext Legal Solutions. 07:52:25

Pictiva EX2016
Samsung v Pictiva
IPR2024-01095

I am not related to any party in this action 07:52:27
nor am I financially interested in the outcome. If 07:52:30
there are any objections to proceeding, please state 07:52:34
them at the time of your appearance. 07:52:36
Counsel and all present will now state their 07:52:37
appearances and affiliations for the record beginning 07:52:39
with the noticing attorney. 07:52:42
MS. CARSON: This is Rebecca Carson of Irell 07:52:43
& Manella on behalf of Pictiva. 07:52:48
MS. BAILY: Melissa Baily from Quinn Emanuel 07:52:50
on behalf of the Samsung defendants. 07:52:54

FRED SCHUBERT,
having been administered an oath, was examined and
testified as follows:

EXAMINATION

BY MS. CARSON: 07:53:19
Q. Could you please state your name for the 07:53:19
record. 07:53:21
A. Eric Fred Schubert. 07:53:21
Q. And, sir, you've been retained as an expert 07:53:28
on claim construction issues by Samsung; is that 07:53:31
right? 07:53:39

Pictiva EX2016
Samsung v Pictiva
IPR2024-01095

A. I've been retained, I believe, by the Quinn 07:53:40
Emanuel law firm. 07:53:45
Q. And they retained you on behalf of Samsung? 07:53:49
A. Yes. That is my understanding. 07:53:52
Q. When were you retained? 07:54:00
A. It was the June 2024 timeframe. 07:54:14
Q. And you've submitted a declaration in this 07:54:18
case; is that right? 07:54:23
A. Yes. 07:54:33
Q. How long did you spend reviewing materials 07:54:33
and preparing that declaration? 07:54:36
A. Overall, I spent more than 100 hours on the 07:55:00
case. But less than 200 hours. 07:55:05
MS. CARSON: I've added Exhibit 1 to the 07:55:13
Exhibit Share folder. 07:55:17
(Exhibit 1 was marked for identification by
the court reporter and is attached hereto.)
BY MS. CARSON:
Q. If you could just open that up. Let me know 07:55:18
when you've got access to it. 07:55:44
A. I've received it. 07:55:46
Q. Is that a copy of your declaration that you 07:55:47
submitted in this case? 07:55:50
A. Yes. 07:56:07
Q. And did you write this declaration yourself? 07:56:08

Pictiva EX2016
Samsung v Pictiva
IPR2024-01095

A. This declaration is a product of 07:56:26
collaboration with counsel. I wrote it in part. 07:56:28
Q. Did anyone else write any portions of it? 07:56:37
A. Yes. 07:56:43
Q. And who wrote other portions of the 07:56:43
declaration? 07:56:46
A. The legal portion was written by counsel. 07:56:49
Q. Were any of the portions related to the 07:56:53
terms that you're opining on for construction written 07:56:57
by counsel? 07:57:00
A. Ultimately, I wrote the report. I authored 07:57:27
the report. It's my report. But some parts, they 07:57:32
have been drafted by counsel. 07:57:41
Q. Are you able to tell me what percentage of 07:57:44
the declaration you wrote versus counsel? 07:57:52
A. Counsel wrote the legal portion, the table 07:58:04
of contents. But I am the one who is responsible for 07:58:11
the technical content. 07:58:26
Q. I understand your response as you signed it. 07:58:32
My question is a little bit different. I'm just 07:58:34
asking if you're able to tell me what percentage of 07:58:37
the rest of the declaration did you do a first draft 07:58:39
versus counsel? 07:59:03
MS. BAILY: Asked and answered. Go ahead, 07:59:04
Fred. 07:59:06

Pictiva EX2016
Samsung v Pictiva
IPR2024-01095

THE WITNESS: I don't recall a specific 07:59:10
percentage. 07:59:11
BY MS. CARSON: 07:59:13
Q. Just to be clear, sitting here right now, 07:59:26
you're not able to tell me what percentage of your 07:59:28
declaration you were the drafter for; is that right? 07:59:32
MS. BAILY: Asked and answered. 07:59:40
Mischaracterizes the testimony. 07:59:47
MS. CARSON: I'm not sure, Ms. Baily, if 07:59:51
you're familiar with the rules in the Eastern 07:59:53
District of Texas. But you're not allowed to do any 07:59:55
objection other than form or privileged. So I'd just 07:59:58
ask you to comply with those rules. 08:00:01
Q. Could you answer the question, sir? 08:00:14
A. Can I hear the question again? 08:00:16
Q. Sure. The question was sitting here right 08:00:17
now, you're not able to tell me what percentage of 08:00:22
your declaration you drafted as opposed to counsel; 08:00:24
is that right? 08:00:45
A. I am responsible for the technical content. 08:00:45
I authored the declaration including its technical 08:00:50
content. But as I said, counsel has written 08:00:58
sections. 08:01:10
For example, the legal section was 08:01:10
exclusively written by counsel. 08:01:12

Pictiva EX2016
Samsung v Pictiva
IPR2024-01095

Q. Are you able to testify under oath as to 08:01:18
whether counsel wrote any of the sections on specific 08:01:20
terms? 08:01:23
MS. BAILY: Object to form. 08:01:26
THE WITNESS: The specific term sections 08:01:37
were a collaboration between myself and counsel. And 08:01:39
I authored -- I am the author of these sections. And 08:01:47
these sections have been a product of my 08:01:56
collaboration with counsel. 08:02:03
BY MS. CARSON: 08:02:07
Q. When you say you're the author, does that 08:02:07
mean you yourself drafted and wrote them? 08:02:15
MS. BAILY: Object to form. 08:02:18
THE WITNESS: The declaration is the product 08:02:22
of my opinions. 08:02:26
MS. CARSON: Move to strike as 08:02:31
nonresponsive. 08:02:36
Q. When you say you were the author of these 08:02:37
sections, did you personally draft and write them? 08:02:39
MS. BAILY: Object to form. 08:02:44
THE WITNESS: I have provided my opinions to 08:02:50
counsel. I have communicated with counsel. I have 08:02:55
conveyed my opinions to counsel. And I received 08:02:59
assistance from counsel with respect to the typing 08:03:06
process. 08:03:10

Pictiva EX2016
Samsung v Pictiva
IPR2024-01095

BY MS. CARSON: 08:03:13
Q. Do you have a paper copy of your declaration 08:03:22
with you today? 08:03:26
A. No. 08:03:34
Q. Do you have any other documents or materials 08:03:35
with you today? 08:03:37
A. Printed documents? 08:03:44
Q. Yes. 08:03:45
A. No. 08:03:47
Q. Do you have any documents opened on your 08:03:47
computer screen other than the exhibit that I have 08:03:50
introduced? 08:03:52
A. No other documents. 08:03:55
Q. What materials did you review before you 08:04:07
formed your opinions in this case? 08:04:09
A. With respect to claim construction, I 08:04:16
reviewed the asserted patents, their file histories, 08:04:25
the preliminary claim constructions offered by the 08:04:37
parties, and the documents that are cited in my claim 08:04:45
construction declaration. 08:05:00
Q. Did you read each of the patents at issue in 08:05:01
this case from front to bottom? 08:05:07
A. Yes. 08:05:11
Q. And did you read the entirety of every one 08:05:12
of the file histories? 08:05:15

Pictiva EX2016
Samsung v Pictiva
IPR2024-01095

A. Not the entirety of the file histories. But 08:05:27
the relevant parts. 08:05:30
Q. Did you read the entirety of any of the file 08:05:31
histories for any of the patents in suit? 08:05:37
A. I read all the file histories. Some of the 08:05:53
references may have been in a different language. 08:06:00
And I read the relevant parts. 08:06:07
But if you want to be specific, I would need 08:06:11
to have a look at the file histories. Maybe there 08:06:15
was a short one there that I read completely. Maybe 08:06:20
there's a long one there that I haven't read 08:06:22
completely but just the relevant parts. 08:06:25
But generally I read the author sections. I 08:06:27
read what the applicant states or communicates with 08:06:32
the USPTO. I read the modification of the claim 08:06:44
language. I may read some of the prior art 08:06:55
references that I find in the file histories. 08:07:04
But I'm not reading -- typically I'm not 08:07:08
reading every single prior art that is found in the 08:07:12
file history. 08:07:22
Q. Did you read all of the prior art that is 08:07:25
specifically discussed in an office action or 08:07:28
response? 08:07:30
A. Some of it, yes. 08:07:41
Q. But not all of it? 08:07:42

Pictiva EX2016
Samsung v Pictiva
IPR2024-01095

A. Sometimes I may read all of it. Sometimes I 08:07:50
may not read all of it. 08:07:52
Q. Did you review Samsung's invalidity 08:08:02
contentions? 08:08:04
A. I have started reviewing some of the IPRs, 08:08:22
inter partes reviews or petitions. And those 08:08:30
petitions include some of the asserted prior art. 08:08:47
But I have not completed that process. 08:08:56
Q. Did you review any of those IPR petitions 08:08:59
before you submitted your declaration in this case? 08:09:01
A. In part, yes. 08:09:25
Q. Which IPR petitions did you review prior to 08:09:27
forming your opinions in the declaration? 08:09:35
A. I recall that all of the petitions were 08:09:53
available to me. And I recall that there are six 08:10:01
asserted patents and seven IPR petitions. 08:10:10
And I started reviewing them in a 08:10:19
chronological manner. And I may have gotten to 08:10:23
petition number 2 or 3. That is my recollection. 08:10:28
Q. When you say chronological order, do you 08:10:38
mean the order in which they were filed? 08:10:40
A. No. 08:10:45
Q. What do you mean by chronological order? 08:10:45
A. I mean the chronological order of the issue 08:10:50
dates of the asserted patents. 08:10:55

Pictiva EX2016
Samsung v Pictiva
IPR2024-01095

Q. Is there a reason you didn't review all of 08:11:05
the IPR petitions that have been filed before you 08:11:13
formed the opinions in your declaration? 08:11:16
MS. BAILY: Object to form. 08:11:23
THE WITNESS: The time available played a 08:11:53
role. 08:12:01
BY MS. CARSON: 08:12:03
Q. So you didn't have time to review all of 08:12:03
them before you submitted your declaration? 08:12:06
MS. BAILY: Object to form. 08:12:13
THE WITNESS: I'm in the process of 08:12:18
reviewing the prior art. And I have not completed 08:12:19
that process with respect to my claim construction 08:12:27
declaration. 08:12:35
I did not see a need to review the petitions 08:12:38
in their entirety. I reviewed some parts of the 08:12:45
petition. But at this point, I have not reviewed the 08:12:54
IPR petitions or the prior art in its entirety. 08:13:03
BY MS. CARSON: 08:13:17
Q. And that's not something that you thought 08:13:17
was critical before you opined on claim construction 08:13:19
in this case; is that right? 08:13:24
MS. BAILY: Object to form. 08:13:25
THE WITNESS: Some parts of the petitions 08:13:37
and some parts of the patent owner preliminary 08:13:40

Pictiva EX2016
Samsung v Pictiva
IPR2024-01095

1 response, I consider relevant. 08:13:47
2 I'm also aware that for some of the IPRs, 08:13:55
3 there have been a preliminary reply and a preliminary 08:14:01
4 sur-reply. 08:14:12
5 And I have reviewed at least one of those. 08:14:15
6 But I have not reviewed all the IPR documents in 08:14:24
7 their entirety. 08:14:33
8 BY MS. CARSON: 08:14:40
9 Q. Do you know if the PTAB has issued any 08:14:40
10 decisions in any of those IPRs? 08:14:47
11 A. I have heard there was one decision by the 08:14:56
12 PTAB. But I have not seen related documents. 08:15:07
13 Q. So did you read the decision? 08:15:12
14 A. No. 08:15:19
15 Q. Your background is in electrical and 08:15:31
16 computer engineering; is that right? 08:15:34
17 A. Here in academia my affiliation is with 08:15:46
18 electrical and computer engineering. However, my 08:15:50
19 research activities and work activities have gone 08:15:55
20 somewhat beyond electrical engineering. 08:16:02
21 Q. All of the degrees you received from your 08:16:09
22 schooling were in electrical engineering, correct? 08:16:12
23 A. Correct. 08:16:24
24 Q. You don't hold yourself out to be an expert 08:16:25
25 in chemistry; is that right? 08:16:36

Pictiva EX2016
Samsung v Pictiva
IPR2024-01095

MS. BAILY: Object to form. 08:16:37
THE WITNESS: During my Ph.D., I worked for 08:16:42
four years in a solid state chemistry department. 08:16:47
Subsequently, when I worked in industry, I 08:16:54
worked for eight years in the material science 08:16:56
division of AT&T. 08:17:02
So I have been exposed to a lot of 08:17:09
chemistry, material science, materials processing 08:17:17
during my professional career. 08:17:21
BY MS. CARSON: 08:17:26
Q. Do you hold yourself out as an expert in 08:17:26
chemistry? 08:17:31
MS. BAILY: Object to form. 08:17:32
THE WITNESS: I have acquired some expertise 08:18:02
in the field of chemistry. But I have not 08:18:06
represented myself as an expert in chemistry. 08:18:12
BY MS. CARSON: 08:18:20
Q. You don't have any degrees in chemistry, 08:18:20
correct? 08:18:25
A. I have no academic degree in chemistry. But 08:18:28
I have worked for four years in the solid state 08:18:35
chemistry department of a research institute. And I 08:18:43
have worked for eight years in the Material Science 08:18:56
Division of the AT&T Research Laboratories. 08:19:01
Q. And when was that? 08:19:12

Pictiva EX2016
Samsung v Pictiva
IPR2024-01095

A. I worked in the Solid State Chemistry 08:19:28
Department of the Max Planck Institute from 1981 to 08:19:36
1985. And I worked in the Material Science Division 08:19:49
of AT&T Research Division from 1988 to 1995. 08:20:03
Q. Since 19 -- you said 1995? 08:20:24
A. Correct. 08:20:37
Q. Since 1995, have you done any research in 08:20:41
the area of chemistry? 08:20:44
MS. BAILY: Object to form. 08:20:49
THE WITNESS: I have done research in 08:20:51
microelectronics, optoelectronics, materials 08:20:57
deposition, materials removal. And that inevitably 08:21:01
included chemistry. 08:21:07
For example, I have built a chemically 08:21:11
assisted ion beam etching system. And in that type 08:21:16
of work, chemistry is inevitably part of it. 08:21:29
BY MS. CARSON: 08:22:08
Q. Do you have any degrees or research 08:22:08
experience with organic chemistry? 08:22:10
MS. BAILY: Object to form. 08:22:15
THE WITNESS: Yes. 08:22:23
BY MS. CARSON:
Q. And what is that that you're referring to? 08:22:23
A. I have worked in the field of organic light 08:22:29
emitting diodes and displays made of organic light 08:22:33

Pictiva EX2016
Samsung v Pictiva
IPR2024-01095

emitting diodes. 08:22:41
Q. Could you turn to paragraph 13 of your 08:23:27
declaration? Let me know when you're there. 08:23:29
A. Yes. 08:23:46
Q. And in paragraph 13, you discuss your 08:23:47
experience at AT&T Bell Laboratories; is that right? 08:23:51
A. Yes. 08:24:01
Q. And was that the experience that you 08:24:01
mentioned in the early '90s? 08:24:03
A. The first sentence of paragraph 13 refers to 08:24:08
the time when I worked for AT&T. The second sentence 08:24:23
refers to technical consulting services that are more 08:24:34
recent, that happened after my employment with AT&T. 08:24:41
Q. By technical consulting services, do you 08:24:49
mean expert work? 08:24:53
MS. BAILY: Object to form. 08:25:01
THE WITNESS: Most of it, yes. But not 08:25:02
limited to expert witness technical consulting. 08:25:05
BY MS. CARSON: 08:25:14
Q. Okay, I see. In this paragraph, you have a 08:25:15
sentence here that says, "one project concerned the 08:25:18
enhancement of carrier mobility in amorphous and 08:25:23
polycrystalline silicon TFTs." 08:25:27
Where did you do that work? 08:25:32
A. Here at my home institution, RPI, Rensselear 08:25:45

Pictiva EX2016
Samsung v Pictiva
IPR2024-01095

Polytechnic Institute. 08:25:50
Q. And how long ago did you work on that? 08:25:53
A. Are you asking for that particular project? 08:26:30
Or generally my activities in OLEDs? 08:26:32
Q. That particular project. 08:26:38
A. That particular project was probably 08:26:50
somewhere around 2010. 08:26:52
Q. And you state that it was, "concerned with 08:26:59
the enhancement of the carrier mobility in amorphous 08:27:00
and polycrystalline silicon TFTs." 08:27:07
Just for the record, what is "TFTs." 08:27:10
A. Thin film transistors. 08:27:13
Q. And can you tell me a little bit more about 08:27:20
what you were doing? 08:27:23
A. We investigated the properties of TFTs and 08:27:40
their dependence on device parameters including the 08:27:48
carrier mobility. 08:27:55
Q. And your goal was to enhance carrier 08:28:04
mobility? 08:28:07
A. I can't recall all the details. But your 08:28:33
statement may be correct. 08:28:35
Q. What is carrier mobility? 08:28:37
A. Carrier mobility is a quantity that connects 08:29:04
the carrier velocity to an electric field that the 08:29:10
carrier is subjected to. 08:29:19

Pictiva EX2016
Samsung v Pictiva
IPR2024-01095

Q. And what types of things were you doing to 08:29:24
try to enhance carrier mobility in this project? 08:29:46
MS. BAILY: Object to form. 08:29:53
THE WITNESS: The carrier mobility may 08:29:55
depend strongly on the properties of the material. 08:30:38
And we investigated different materials. 08:30:50
BY MS. CARSON: 08:30:53
Q. And did you measure the carrier mobility of 08:30:53
those materials? 08:30:56
A. We measured the properties of the TFT. And 08:31:10
the properties of the TFT as a result of various 08:31:20
parameters including the carrier mobility. 08:31:26
Q. And did you compare the measurements of the 08:31:37
various materials? 08:31:40
A. I don't have a specific recollection. But I 08:31:42
would assume so. 08:31:53
Q. What was the conclusion of that project? 08:31:56
A. The conclusion was that the properties of 08:32:40
TFTs depend on the silicon material and the type of 08:32:46
silicon material. For example, amorphous silicon or 08:33:00
polycrystalline silicon. And additionally, on the 08:33:13
fabrication method of those materials. 08:33:27
Q. Were you able to determine which particular 08:33:34
materials had better carrier mobility for TFTs? 08:33:39
A. Can I hear the question again? 08:33:54

Pictiva EX2016
Samsung v Pictiva
IPR2024-01095

Q. Were you able to determine which particular 08:33:55
materials had better carrier mobility for TFTs? 08:33:58
A. The only material we worked with at that 08:34:09
time was silicon. We did not work with other 08:34:11
materials for this TFT project. 08:34:20
Q. Were you able to determine whether amorphous 08:34:25
silicon or polycrystalline silicon had better carrier 08:34:29
mobility? 08:34:44
A. My recollection is that polycrystalline 08:34:44
silicon has a higher mobility. 08:34:47
Q. So during that research, you were able to 08:34:53
compare the carrier mobility of those two different 08:35:00
types of silicon and determine which had a higher 08:35:04
carrier mobility; is that right? 08:35:09
A. I would not express it in this manner. I 08:35:16
would say that we investigated the properties of the 08:35:22
TFTs. 08:35:30
And the properties of the TFTs depend on 08:35:31
various parameters such as geometrical parameters and 08:35:36
other non-geometrical parameters including the 08:35:48
carrier mobility. 08:35:54
Q. And I think you testified that your 08:35:59
recollection is that polycrystalline silicon has a 08:36:00
higher carrier mobility. 08:36:03
How did you determine that during that 08:36:07

Pictiva EX2016
Samsung v Pictiva
IPR2024-01095

investigation? 08:36:10
A. I don't have a good recollection. But my 08:36:38
recollection is that we investigated the properties 08:36:40
of the TFTs. 08:36:48
Q. What properties are you referring to? 08:36:58
A. The threshold voltage, the transconductance, 08:37:16
and the breakdown wattage. 08:37:30
Q. And when you say you investigated those 08:37:43
properties, did you measure them somehow? 08:37:45
MS. BAILY: Object to form. 08:37:48
THE WITNESS: Yes. 08:37:56
BY MS. CARSON: 08:37:57
Q. How did you measure them? 08:37:57
A. Using measurement instruments. 08:38:06
Q. And then you compared those measurements 08:38:19
between the two materials to determine which had 08:38:23
better carrier mobility? 08:38:28
MS. BAILY: Object to form. 08:38:32
THE WITNESS: I would express it in the 08:38:40
following manner: We investigated the properties of 08:38:41
the TFTs. And the properties of the TFTs are the 08:38:48
quantity we are interested in. The properties of the 08:39:03
TFT is what we are interested in. 08:39:09
The TFT and its quality is expressed through 08:39:16
the parameters that I mentioned. And those 08:39:27

Pictiva EX2016
Samsung v Pictiva
IPR2024-01095

parameters were of interest to us. And these 08:39:31
parameters, we measured using electronic measurement 08:39:38
instruments. 08:39:46
BY MS. CARSON: 08:39:53
Q. And then how did you use those to try to 08:39:55
enhance carrier mobility? 08:40:03
MS. BAILY: Object to form. 08:40:10
THE WITNESS: I'm not sure if I understand 08:40:37
your question. But what we did was we fabricated 08:40:39
TFTs, thin film transistors made of silicon. And the 08:40:46
silicon was either in its amorphous or 08:40:58
polycrystalline form. 08:41:04
And these two forms were grown or deposited 08:41:08
or fabricated by different methods. And we compared 08:41:18
the properties of the TFTs that we had fabricated. 08:41:28
BY MS. CARSON: 08:41:40
Q. And then based on that comparison, you were 08:41:40
able to conclude which one of them had better carrier 08:41:43
mobility? 08:41:52
MS. BAILY: Object to form. 08:41:52
THE WITNESS: We did not assess or measure 08:42:08
the carrier mobility. But we measured the properties 08:42:17
of the TFTs. And the properties of the TFTs are a 08:42:23
result of various parameters. And one of these 08:42:34
parameters is the carrier mobility. 08:42:41

Pictiva EX2016
Samsung v Pictiva
IPR2024-01095

BY MS. CARSON: 08:42:51
Q. And based on your work investigating these 08:42:51
issues and making these measurements, you were able 08:42:58
to determine that polycrystalline silicon has higher 08:43:06
carrier mobility than amorphous silicon; is that 08:43:10
right? 08:43:14
MS. BAILY: Object to form. 08:43:14
THE WITNESS: I don't recall the details. 08:43:20
But generally I recall that the mobility of 08:43:21
polycrystalline silicon is higher than the mobility 08:43:35
of amorphous silicon. 08:43:42
BY MS. CARSON: 08:43:49
Q. Did you publish any papers? Or document 08:43:49
this project in anyway? 08:43:54
A. Usually there is paperwork associated with 08:44:16
any project. There are project reports. But I don't 08:44:30
recall a journal publication that we would have 08:44:38
published in conjunction with this project. 08:44:44
Q. What did you do with the results of the 08:44:52
project? 08:44:56
A. I don't recall the details. But I would 08:45:12
assume that the results of the project found their 08:45:14
way into a project report. 08:45:23
Q. And what's a project report? 08:45:28
A. Say that again? 08:45:33

Pictiva EX2016
Samsung v Pictiva
IPR2024-01095

Q. What is a project report? 08:45:34
A. The project report is a written document 08:45:44
that reports on the project including its results. 08:45:56
And specifically given to a sponsor of the project. 08:46:12
Q. Do you recall who sponsored this project? 08:46:16
A. I do not. 08:46:30
Q. Do you keep copies of project reports for 08:46:30
the work that you do? 08:46:33
A. Usually I do. But in around 2015 to 2020, I 08:46:47
made a transition from local computer to cloud 08:46:57
computing. And at that time, I did not transfer 08:47:10
everything to the cloud. 08:47:13
So currently, it's not on the computer 08:47:17
system that I am using. Here in my office, I have 08:47:21
some other computers, some backup things, some old 08:47:30
hard drives. 08:47:37
And I don't know what's on them. I have not 08:47:38
looked at them for at least five years. 08:47:43
Q. So do you know if you have a copy of the 08:47:51
project report for this project? 08:47:53
A. I do not have a copy on the computer system 08:47:59
that I'm currently using. And my current computer 08:48:02
system is a cloud computer. And it's not in the 08:48:05
cloud. 08:48:10
Q. But you're not sure if you have a copy in 08:48:11

Pictiva EX2016
Samsung v Pictiva
IPR2024-01095

your backup computing systems? 08:48:13
A. Yeah. I wouldn't call it backup computer 08:48:22
systems because they're not a backup anymore. All 08:48:24
the backup is done by the cloud provider. 08:48:27
But I have some unused computer equipment 08:48:30
here in my office. And this includes at least two 08:48:36
computers. It includes multiple hard drives that are 08:48:41
no longer in active use. 08:48:55
And at the present time, I don't know what's 08:48:57
on those local computer storage components. So I 08:49:07
can't tell you what is on those older pieces of 08:49:22
equipment. 08:49:30
I have not used them for the last five years 08:49:30
because I don't need them at the present time. All 08:49:32
my documents are on a cloud computer. 08:49:40
MS. CARSON: Why don't we take a break. 08:49:46
VIDEO OPERATOR: Counsel, do you agree to go 08:49:48
off the record? 08:49:53
MS. BAILY: Yes. 08:49:53

VIDEO OPERATOR: Going off the record. The 08:49:55
time is 10:49 a.m. 08:49:56
08:54:00
(Recess taken.)
09:02:05

Pictiva EX2016
Samsung v Pictiva
IPR2024-01095

VIDEO OPERATOR: We're back on the record at 09:02:06
11:02 a.m. 09:02:17
09:02:17
BY MS. CARSON:
Q. Could you turn to page 40 of your 09:02:19
declaration? 09:02:23
A. Yes. 09:02:44
Q. And on page 40 is the start of the section 09:02:46
of your declaration regarding the '223 patent. The 09:02:51
first term you have opined on here is metal complex; 09:02:58
is that right? 09:03:08
A. Correct. 09:03:09
Q. What is a metal complex? 09:03:10
A. The construction that I support is that a 09:03:23
metal complex is not a compound composed of one or 09:03:35
more metal atoms and one or more oxygen atoms. 09:03:42
Q. And is it your understanding that that's the 09:03:53
plain-and-ordinary meaning of metal complex? 09:03:55
MS. BAILY: Object to form. 09:04:04
THE WITNESS: My understanding is that this 09:04:11
is the meaning in the context of the '223 patent, 09:04:12
including its prosecution history. And, I guess, 09:04:24
recent documents that are part of the prosecution 09:04:36
history. 09:04:38
/// 09:04:41

Pictiva EX2016
Samsung v Pictiva
IPR2024-01095

BY MS. CARSON:
Q. So if one of your students asked you what a 09:04:42
metal complex is, how would you respond? 09:04:44
MS. BAILY: Object to form. 09:04:50
THE WITNESS: Are you asking that outside 09:04:54
the context of the '223 patent? 09:04:55
BY MS. CARSON: 09:05:00
Q. Correct. 09:05:06
A. The field of technology is very wide. And 09:06:19
so it somewhat depends on the field that we are 09:06:24
talking about. And the context that we are talking 09:06:30
about. 09:06:34
And a metal complex is certainly a chemical 09:06:34
compound that includes a metal that is also a 09:06:41
complex. 09:06:48
But I have not formed an opinion outside the 09:06:49
'223 patent on the term metal complex. I have not 09:06:52
rendered an opinion on that topic. 09:06:58
Q. What is a complex? 09:07:03
A. I have not really formed an opinion on a 09:07:16
complex. And I assume that this is also outside the 09:07:42
context of the '223 patent? 09:07:50
But a complex has multiple components. And 09:07:55
is used in the field of metal complex chemistry. 09:08:16
Q. Can a complex have only two elements? 09:08:21

Pictiva EX2016
Samsung v Pictiva
IPR2024-01095

A. I would not wish to exclude that 09:08:53
possibility. It depends on the specifics. 09:09:08
Q. What specifics does it depend on? 09:09:10
A. I'm not certain. And I don't understand if 09:09:32
you're talking about the context of the '223 patent 09:09:32
or if you're talking about the word complex in 09:09:38
general. 09:09:45
Q. Let's start just in general. What specifics 09:09:45
would it depend on just based on your general 09:09:48
understanding of what a complex is as to whether a 09:09:53
compound with just two elements would qualify as a 09:09:59
complex? 09:10:03
MS. BAILY: Object to form. 09:10:04
THE WITNESS: I would not want to exclude 09:10:24
the possibility that a complex has two chemical 09:10:58
elements. 09:11:08
BY MS. CARSON: 09:11:09
Q. Can you give me any examples of complexes 09:11:09
that have just two elements? 09:11:12
A. No specific complex comes to mind at the 09:11:56
present time. 09:12:03
Q. Okay. So going back to your construction in 09:12:03
the context of the '223 patent, your construction is 09:12:05
a "metal complex that is not a compound composed of 09:12:10
one or more metal atoms and one or more oxygen 09:12:14

Pictiva EX2016
Samsung v Pictiva
IPR2024-01095

atoms."

Within that construction, what would a 09:12:29
person of skill in the art understand the portion of 09:12:30
your construction that refers to a "metal complex" to 09:12:34
mean? 09:12:37

MS. BAILY: Object to form. 09:12:50

THE WITNESS: Based on the construction or 09:12:51
based on the proposed construction, a person of skill 09:12:53
would understand that certain compounds are excluded. 09:13:01
And the compounds that I excluded are composed of at 09:13:15
least one metal atom and at least one oxygen atom. 09:13:24
BY MS. CARSON: 09:13:37
Q. Under your construction, would all compounds 09:13:37
other than those that are composed of one or more 09:13:41
metal atoms and one or more oxygen atoms be a metal 09:13:44
complex? 09:13:49

MS. BAILY: Object to form. 09:14:03

THE WITNESS: No. A metal complex is 09:14:17
understood to include a metal. 09:14:18
BY MS. CARSON: 09:14:24
Q. So under your construction, would all 09:14:24
compounds that include a metal but are not composed 09:14:29
of one or more metal atoms and one or more oxygen 09:14:37
atoms meet your construction of a metal complex? 09:14:41

MS. BAILY: Object to form. 09:15:04

Pictiva EX2016
Samsung v Pictiva
IPR2024-01095

1 THE WITNESS: Can I hear the question again? 09:15:05
2 BY MS. CARSON: 09:15:05
3 Q. Under your construction, would all compounds 09:15:05
4 that include a metal but that are not composed of one 09:15:08
5 or more metal atoms and one or more oxygen atoms meet 09:15:14
6 your construction? 09:15:18
7 MS. BAILY: Object to form. 09:15:23
8 THE WITNESS: No. For example, sodium 09:15:33
9 chloride, NaCl, is not a metal complex. 09:15:40
10 BY MS. CARSON: 09:15:53
11 Q. And why is that? 09:15:53
12 A. Sodium chloride is not understood to be a 09:16:18
13 metal complex in the art. 09:16:21
14 Q. Why? 09:16:28
15 A. It is understood as an alkaline metal salt. 09:16:32
16 Q. What elements make up sodium chloride? 09:17:10
17 A. Sodium and chlorine. 09:17:18
18 Q. Sodium is a metal, correct? 09:17:24
19 A. Correct. 09:17:30
20 Q. So not all compounds that include a metal 09:17:32
21 are metal complexes; is that fair? 09:17:42
22 A. Yes. 09:17:55
23 Q. Your construction notes that a metal complex 09:18:01
24 is not a compound composed of one or more metal atoms 09:18:06
25 and one or more oxygen atoms. You don't dispute that 09:18:11

Pictiva EX2016
Samsung v Pictiva
IPR2024-01095

a metal complex can include one or more metal atoms, 09:18:16
correct? 09:18:22
MS. BAILY: Object to form. 09:18:22
THE WITNESS: A metal complex can include 09:18:50
one metal atom. That is correct. And a metal 09:18:53
complex can include two metal atoms. That is also 09:19:01
correct.
BY MS. CARSON: 09:19:14
Q. So even though your construction says it is 09:19:14
a not a compound composed of one or more metal atoms, 09:19:17
you do concede that a metal complex does have to have 09:19:21
at least one metal atom, correct? 09:19:26
MS. BAILY: Object to form. 09:19:29
THE WITNESS: There may be an ambiguity 09:19:39
created by you not having read my construction in its 09:19:47
entirety. 09:19:47
So my construction is a metal complex that 09:19:47
is not a compound composed of one or two -- one or 09:19:51
more metal atoms and one or more oxygen atoms. 09:19:59
BY MS. CARSON: 09:20:12
Q. Is your construction intended to exclude 09:20:13
situations where a compound has one or more metal 09:20:16
atoms, one or more oxygen atoms, and one or more 09:20:20
additional elements such as carbon or hydrogen? 09:20:24
MS. BAILY: Object to form. 09:20:33

Pictiva EX2016
Samsung v Pictiva
IPR2024-01095

THE WITNESS: Can I hear the question again? 09:20:44
BY MS. CARSON: 09:20:46
Q. Sure. Is your construction intended to 09:20:46
exclude situations where a compound has one or more 09:20:48
metal atoms, one or more oxygen atoms, and one or 09:20:51
more additional elements such as a carbon or 09:20:56
hydrogen? 09:21:03
MS. BAILY: Object to form. 09:21:04
THE WITNESS: Yes. 09:21:11
BY MS. CARSON: 09:21:11
Q. So it is your position that a metal complex 09:21:11
can never include oxygen? 09:21:14
MS. BAILY: Object to form. 09:21:20
THE WITNESS: Based on statements that the 09:21:28
applicants made during prosecution, it is my 09:21:32
understanding that a metal complex is not a compound 09:21:39
that is composed of at least one metal atom and at 09:21:48
least one oxygen atom. 09:21:59
BY MS. CARSON: 09:22:03
Q. Even if it contains other types of elements? 09:22:03
MS. BAILY: Object to form. 09:22:16
THE WITNESS: Correct. 09:22:17
BY MS. CARSON: 09:22:18
Q. And that's based on a statement in the 09:22:18
prosecution history that the reference Pictiva 09:22:40

Pictiva EX2016
Samsung v Pictiva
IPR2024-01095

disclosed -- strike that. 09:22:52
Absent what you identify as an alleged 09:23:00
disclaimer in the prosecution history, would you 09:23:04
agree that metal complexes can include oxygen? 09:23:10
MS. BAILY: Object to form. 09:23:27
THE WITNESS: Outside the context of the 09:23:28
'223 patent, yes. 09:23:30
BY MS. CARSON: 09:23:32
Q. And you agree that metal complexes can be 09:23:37
made of more than two different elements, correct? 09:23:39
MS. BAILY: Object to form. 09:23:43
THE WITNESS: Yes. 09:24:02
BY MS. CARSON: 09:24:03
Q. Can you give me an example of a metal 09:24:03
complex that would satisfy your construction? 09:24:07
MS. BAILY: Object to form. 09:24:15
THE WITNESS: A metal complex that includes 09:24:19
a tungsten atom, carbon atoms, and hydrogen atoms 09:24:38
would not be excluded under this construction. 09:25:12
And would constitute a metal complex. Or I 09:25:15
should say could constitute a metal complex. 09:25:19
BY MS. CARSON: 09:25:33
Q. What is a metal oxide? 09:25:33
MS. BAILY: Object to form. 09:25:37
THE WITNESS: And your question is general? 09:26:25

Pictiva EX2016
Samsung v Pictiva
IPR2024-01095

Not in the context of the '223 patent? 09:26:27
BY MS. CARSON: 09:26:30
Q. Yes. What does a person of skill in the art 09:26:30
generally understand a metal oxide to be? 09:26:32
A. I would like to answer the question with 09:26:52
respect to organic compounds and inorganic compounds. 09:26:54
If we have an inorganic compound and the inorganic 09:26:59
compound is referred to as a metal oxide, then the 09:27:06
compound typically includes metal atom and oxygen 09:27:18
atoms. 09:27:26
For example, aluminum oxide, Al2O3, is a 09:27:33
metal oxide. Or zinc oxide, ZNO, is a metal oxide. 09:27:50
In the context of organic compounds, I would 09:28:02
need to do a bit more research because I have not 09:28:14
opined on this question. 09:28:23
But I would say an organic compound that may 09:28:25
be described as an oxide, there could be additional 09:28:29
carbon atoms. 09:28:38
BY MS. CARSON: 09:28:45
Q. Are you able to identify any examples of 09:28:46
metal oxides that include elements other than metal 09:28:50
and oxygen? 09:29:01
A. In the context of inorganic compounds, yes. 09:29:06
In the context of organic compounds, I would need to 09:29:10
think a bit about it. 09:29:23

Pictiva EX2016
Samsung v Pictiva
IPR2024-01095

Q. So what metal oxide do you have in mind in 09:29:26
the context of inorganic compounds that consists of 09:29:32
something other than just metal and oxygen? 09:29:37
MS. BAILY: Object to form. 09:29:55
THE WITNESS: As I said earlier, for 09:30:19
inorganic compounds, we typically have one or more 09:30:32
metal atoms and one or more oxygen atoms. 09:30:39
For example, aluminium oxide, AL2O3, we have 09:30:44
two aluminium atoms and we have three oxygen atoms. 09:30:58
Now, if we go to a different compound, such as NAOH, 09:31:03
we can say that it's sodium hydroxide so -- 09:31:18
BY MS. CARSON: 09:31:34
Q. And it's your position that sodium hydroxide 09:31:34
is metal oxide? 09:31:37
A. I wasn't finished. 09:31:44
Q. Okay. 09:31:46
A. So I was just going to say that sodium 09:31:53
hydroxide is not strictly speaking an oxide. It's 09:32:02
hydroxide but it has oxygen in it. I'm finished. 09:32:09
Q. So would you consider sodium hydroxide to be 09:32:17
a metal oxide? 09:32:20
MS. BAILY: Object to form. 09:32:31
THE WITNESS: I would consider it as a metal 09:32:32
hydroxide as sodium hydroxide. I'm just pointing out 09:32:35
that the name of the compound, hydroxide, includes 09:32:39

Pictiva EX2016
Samsung v Pictiva
IPR2024-01095

oxide. 09:32:48
But sodium hydroxide is different from 09:32:50
sodium oxide. Those are different compounds. 09:32:52
BY MS. CARSON: 09:32:57
Q. I understand that. So I think maybe we got 09:32:58
a little bit astray. My question was whether you are 09:33:02
able to identify for me any metal oxide, an example 09:33:04
of a metal oxide, that includes something other than 09:33:08
metal atoms and oxygen atoms? 09:33:13
A. In the context of organic compounds? Or in 09:33:20
the context of inorganic compounds? 09:33:22
Q. Either. 09:33:25
A. In the context of inorganic compounds, the 09:33:36
metal oxide typically consists of metal atoms or a 09:33:43
metal atom and oxygen atoms or one oxygen atom. 09:33:56
If you're asking me in the context of 09:34:05
organic compounds, organic compounds based on 09:34:08
standard nomenclature include carbon. 09:34:17
And I would need to do a little bit more 09:34:27
research. I've not opined on that particular 09:34:28
question. 09:34:33
But I would not want to exclude that such 09:34:33
compounds exist that are metal oxides in the context 09:34:46
of organic compounds. 09:34:56
/// 09:34:59

Pictiva EX2016
Samsung v Pictiva
IPR2024-01095

BY MS. CARSON:
Q. But are you able to identify any example of 09:35:00
an organic compound that would be considered a metal 09:35:04
oxide that includes something other than metal and 09:35:09
oxygen? 09:35:14
MS. BAILY: Object to form. 09:35:20
THE WITNESS: I've not articulated an 09:35:29
opinion on that topic. I can just say that the 09:35:30
compound that I understand you are talking about has 09:35:34
at least a metal atom, has at least an oxygen atom, 09:35:38
and because your question related to organic 09:35:45
compounds, would include also carbon. 09:35:52
But I would need to do further research to 09:36:01
be more specific. 09:36:03
BY MS. CARSON: 09:36:05
Q. So you're not able today to identify any 09:36:05
compound that would qualify as a metal oxide 09:36:12
regardless of whether it's organic or inorganic, that 09:36:15
contains something other than just metal and oxygen? 09:36:22
MS. BAILY: Object to form. 09:36:26
THE WITNESS: You mean off the top of my 09:36:34
head? 09:36:35
BY MS. CARSON: 09:36:36
Q. I'm saying, yes, in response to my question 09:36:36
here today. 09:36:39

Pictiva EX2016
Samsung v Pictiva
IPR2024-01095

A. I would need to do further research to 09:37:18
answer the question. 09:37:20
Q. That's not something you looked into before 09:37:22
forming your opinions in this case, correct? 09:37:28
A. I looked quite a bit. And I considered the 09:37:52
issues at hand quite a bit, including the specifics 09:37:55
that we are talking about right now. 09:38:02
But as I said, based on my review of the 09:38:07
relevant documents, I came to the conclusion that the 09:38:10
construction that is offered here, which is based on 09:38:15
clear statements of the applicants, is a viable -- is 09:38:28
a good -- is an appropriate construction. 09:38:41
Q. And just so that we're clear, the statement 09:38:46
you're referring to is the statement in paragraph 101 09:38:50
of your declaration where (as read): 09:38:57

The applicant stated a person of 09:39:06
ordinary skill in the art 09:39:09
understands that a metal oxide is a 09:39:11
compound composed of one or more 09:39:14
metal atoms and one or more oxygen 09:39:16
atoms. 09:39:19
09:39:20
Is that right? 09:40:35
A. I believe what you said. And I don't recall 09:40:35

Pictiva EX2016
Samsung v Pictiva
IPR2024-01095

exactly what you said. But, if you know, if you look 09:40:39
at paragraph 103 of my declaration, I state here that 09:40:41
(as read):

Based on the statements made by 09:40:50
applicant, applicant disclaims any 09:40:57
metal complexes that were a compound 09:41:02
composed of one or more metal atoms 09:41:08
and one or more oxygen atoms. 09:41:12

Q. And you're reading that statement to 09:41:18
disclaim compounds that contain oxygen atoms. But 09:41:20
not compounds that contain metal atoms; is that 09:41:25
right? 09:41:41
A. I'm not sure if I understand your question. 09:41:41
But what is excluded are compounds composed of at 09:41:43
least one metal atom and at least one oxygen atom. 09:41:57
Q. You're not opining that this is a disclaimer 09:42:09
of compounds that contain metal atoms, correct? 09:42:11
A. Can I hear the question again? 09:42:23
Q. You're not reading this as a disclaimer of 09:42:24
any compound that contains a metal atom, correct? 09:42:26
A. Correct. 09:42:38
Q. But you are reading it as a disclaimer of 09:42:38
any compound that contains an oxygen atom? 09:42:41

Pictiva EX2016
Samsung v Pictiva
IPR2024-01095

A. I'm reading this as a disclaimer for any 09:42:54
compound that is composed of at least one metal atom 09:42:59
and at least one oxygen atom. 09:43:08
Q. A metal complex has to have at least one 09:43:10
metal atom, correct? 09:43:13
MS. BAILY: Object to form. 09:43:19
THE WITNESS: Correct. 09:43:28
BY MS. CARSON: 09:43:29
Q. So you're reading the statement as just 09:43:29
excluding oxygen from metal complexes? 09:43:35
MS. BAILY: Object to form. 09:43:38
THE WITNESS: If it includes one metal atom 09:44:05
and one oxygen atom, that compound would not qualify 09:44:07
as metal complex because applicants have disclaimed 09:44:17
such compounds. 09:44:27
BY MS. CARSON: 09:44:39
Q. You agree that they did not disclaim 09:44:39
compounds that contain metal, correct? 09:44:44
A. A compound that includes a metal may be 09:44:59
excluded or may not be excluded. And the exclusion 09:45:02
is given by the claim construction. 09:45:17
The specific specifics, the specific 09:45:20
conditions, the specific configuration of what is 09:45:26
excluded has been spelled out by the applicants 09:45:28
during the prosecution. 09:45:36

Pictiva EX2016
Samsung v Pictiva
IPR2024-01095

Q. Does this disclaimer apply to anything other 09:45:39
than a compound that contains oxygen? 09:45:43
A. I don't understand the question. 09:46:02
Q. What does this alleged disclaimer disclaim 09:46:03
other than any compound that has oxygen in your view? 09:46:07
MS. BAILY: Object to form. 09:46:18
THE WITNESS: The disclaimer relates to 09:46:22
compounds that are composed of at least one metal 09:46:27
atom and at least one oxygen atom. 09:46:32
BY MS. CARSON: 09:46:43
Q. Given that by definition, a metal complex 09:46:43
includes a metal atom, is there anything other than a 09:46:47
compound -- any compound containing oxygen that would 09:46:51
be excluded by this disclaimer? 09:46:56
MS. BAILY: Object to form. 09:47:00
THE WITNESS: I'm not sure if I understand 09:47:20
your question.
But if we have a compound and we find in 09:47:22
this compound -- we find that the compound is 09:47:29
composed of at least one metal atom and at least one 09:47:36
oxygen atom, then this compound is this specific 09:47:39
compound or one of the specific compounds that are 09:47:44
disclaimed by the applicants. 09:47:53
I'm just going by the words that applicants 09:48:00
used. 09:48:08

Pictiva EX2016
Samsung v Pictiva
IPR2024-01095

BY MS. CARSON: 09:48:11
Q. Do you dispute that the definition of metal 09:48:11
oxide is a binary compound of oxygen element and 09:48:17
another metal -- strike that. 09:48:22
Do you dispute that the ordinary meaning of 09:48:26
a metal oxide is a binary compound composed of an 09:48:30
oxygen element and another metal chemical element? 09:48:36
MS. BAILY: Object to form. 09:48:55
THE WITNESS: In the framework of inorganic 09:48:56
chemistry, I would agree to that. 09:48:58
BY MS. CARSON: 09:49:02
Q. And a binary compound is a chemical 09:49:02
substance that's made of two different elements only, 09:49:05
correct? 09:49:10
MS. BAILY: Object to form. 09:49:13
THE WITNESS: I have rendered an opinion on 09:49:40
binary compounds. But in the field of inorganic 09:49:41
chemistry, two-element compounds based on my 09:49:47
recollection, can be referred to as binary compounds. 09:49:55
BY MS. CARSON: 09:50:12
Q. In your declaration on page 42, you quote a 09:50:12
passage from the Ikeda reference, which is what the 09:50:15
applicants were distinguishing in the prosecution 09:50:20
history, correct? 09:50:24
A. Yes. 09:50:34

Pictiva EX2016
Samsung v Pictiva
IPR2024-01095

Q. And this was that disclosure from Ikeda that 09:50:36
the examiner had relied on as allegedly disclosing a 09:50:41
metal complex, correct? 09:50:46
MS. BAILY: Object to form. 09:51:02
THE WITNESS: I don't recall what the 09:51:19
examiner relied on. But this may have been one piece 09:51:20
that the examiner relied on. 09:51:27
BY MS. CARSON: 09:51:32
Q. All of the metal oxides identified in your 09:51:32
declaration on page 42 are binary compounds, correct? 09:51:39
A. No. 09:51:56
Q. Which one's not a binary compound? 09:51:58
A. ITO. 09:52:07
Q. And what does that contain other than metal 09:52:09
and oxygen? 09:52:13
A. It includes two metal elements and oxygen. 09:52:21
It's not a binary compound. 09:52:29
Q. Does it include anything other than metal 09:52:32
elements and oxygen elements? 09:52:36
A. ITO just includes indium, tin, and oxygen. 09:52:45
So three elements. 09:52:59
Q. And indium and tin are metals, correct? 09:53:00
A. Correct. 09:53:14
Q. So ITO includes only metal and oxygen, 09:53:14
correct? 09:53:33

Pictiva EX2016
Samsung v Pictiva
IPR2024-01095

A. Correct. 09:53:33
Q. If you look at the last little paragraph 09:53:35
above the paragraph 102 on this page, there's a 09:53:45
statement there from the prosecution history that 09:53:50
says (as read): 09:53:52

"In direct contrast, applicants 09:53:53
assert that in the presently claimed 09:53:55
application, the organic electronic 09:53:57
layer is obtained by joint 09:54:01
vaporation of a metal complex, which 09:54:04
comprises a central metal atom with 09:54:08
an organic compound. 09:54:11

Do you see that? 09:54:13
A. Yes. 09:54:42
Q. Oxygen can be part of an organic compound, 09:54:45
correct? 09:54:49
MS. BAILY: Object to form. 09:54:57
THE WITNESS: If you're just talking about 09:55:16
organic compounds in general, outside the context of 09:55:17
the '223 patent, then, yes, organic compounds can 09:55:25
include oxygen. 09:55:31
BY MS. CARSON: 09:55:39
Q. If you neutralize vinegar with sodium 09:55:53

Pictiva EX2016
Samsung v Pictiva
IPR2024-01095

carbonate, you'd get sodium acetate, correct? 09:55:59
MS. BAILY: Object to form. 09:56:02
THE WITNESS: I would need to see the 09:56:23
chemical reaction equation in front of me to answer 09:56:25
the question. 09:56:38
BY MS. CARSON: 09:56:38
Q. Sodium acetate is composed of sodium, which 09:56:38
is a metal, oxygen, carbon, and hydrogen; is that 09:56:41
right? 09:57:08
A. I would need to see either the chemical 09:57:08
formula or the chemical structure, atomic structure, 09:57:10
and the associated names in front of me in order to 09:57:20
answer the question. 09:57:23
Q. Do you consider sodium acetate to be a metal 09:57:24
oxide? 09:57:30
MS. BAILY: Object to form. 09:57:31
THE WITNESS: I'm sorry. I did not hear the 09:57:35
name of the compound. 09:57:38
BY MS. CARSON: 09:57:39
Q. Sodium acetate? 09:57:39
A. And can I hear the question again? 09:57:57
Q. Is sodium acetate a metal oxide? 09:58:00
A. I would need to see the chemical formula or 09:58:22
the atomic structure in order to answer the question. 09:58:25
Q. So you don't know whether sodium acetate is 09:58:35

Pictiva EX2016
Samsung v Pictiva
IPR2024-01095

a metal oxide without doing some further research? 09:58:37
MS. BAILY: Object to form. 09:58:47
THE WITNESS: I intend that had my answer 09:59:00
does not include any speculation. I am currently 09:59:02
under oath and would like to give you an accurate 09:59:05
answer. 09:59:11
You mentioned the compound sodium acetate. 09:59:11
I think I know what you're talking about. But I'm 09:59:20
not 100 percent sure. So I would need to have the 09:59:23
chemical formula in front of me or the atomic 09:59:27
structure. 09:59:32
And I don't wish to speculate. And for that 09:59:33
reason, I would need more information to answer your 09:59:39
question.
BY MS. CARSON: 09:59:46
Q. Do you know what the reaction product is 09:59:46
when sodium reacts with methanol? 09:59:48
A. I'm not sure. I would need to speculate. 10:01:03
Q. What's your guess? 10:01:06
MS. BAILY: Object to form. 10:01:14
THE WITNESS: Well, my guess is that sodium 10:01:15
as an element is very reactive. And it is known that 10:01:20
sodium reacts readily with water. 10:01:31
Now, methanol, we have a carbon atom, we 10:01:43
have three hydrogen atoms, we have an OH group. And 10:01:50

Pictiva EX2016
Samsung v Pictiva
IPR2024-01095

when sodium reacts with water, sodium hydroxide is 10:02:07
being formed. 10:02:20
So I wouldn't be surprised if there would be 10:02:22
a reaction between metallic sodium and methanol. 10:02:25
MS. CARSON: Why don't we take a break? 10:02:51
VIDEO OPERATOR: Counsel, okay to go off the 10:02:53
record? 10:02:54
MS. BAILY: Yes. 10:02:54
10:02:55
VIDEO OPERATOR: Going off the record. The 10:02:56
time is 10:02 p.m. (sic). 10:02:57
10:13:47
(Recess taken.)
10:13:52
VIDEO OPERATOR: Back on the record. The 10:13:58
time is 12:13 p.m. 10:14:01

BY MS. CARSON: 10:14:07
Q. Did you review the patent specification of 10:14:07
the '223 patent to see whether it disclosed any 10:14:11
examples of metal complexes that contain oxygen? 10:14:15
A. I reviewed the patent specification. And I 10:14:25
reviewed it more than once, specific parts more than 10:14:38
once. I don't recall if I reviewed it regarding the 10:14:45
specific point you mentioned. 10:14:54

Pictiva EX2016
Samsung v Pictiva
IPR2024-01095

MS. CARSON: I've introduced Exhibit 2 into 10:14:56
the folder. 10:15:01
(Exhibit 2 was marked for identification by
the court reporter and is attached hereto.)
BY MS. CARSON:
Q. Let me know when you've been able to open 10:15:20
it. 10:15:23
A. Yes. I've been able to open it. 10:15:39
Q. And could you turn to figure 3. 10:15:41
A. Yes. 10:15:54
Q. And the compound in the middle of this 10:15:57
figure 3, the ir(ac), that compound would be excluded 10:16:01
from your definition of metal complex, correct? 10:16:10
MS. BAILY: Object to form. 10:16:23
THE WITNESS: Based on my recollection, the 10:16:42
middle compound shown in figure 3 is a light-emitting 10:17:29
material. 10:17:47
And in that sense, it's not a transport 10:17:52
material. But if we would apply that construction to 10:18:00
this particular compound, then it would be excluded. 10:18:08
BY MS. CARSON: 10:18:14
Q. And that's because that compound contains 10:18:16
metal atoms and oxygen atoms, correct? 10:18:22
A. Based on my recollection, this metal 10:19:15
compound is a light-emitting material. And this 10:19:22

Pictiva EX2016
Samsung v Pictiva
IPR2024-01095

1 light-emitting material is not intended to coordinate 10:19:28
2 during full vaporization. 10:19:39
3 And so the application of this particular 10:19:44
4 chemical is different from what we are talking about 10:19:50
5 in the context of the metal complexes that are 10:19:58
6 identified in the claim construction. 10:20:04
7 But putting that aside, the claim 10:20:08
8 construction that I support would exclude this 10:20:16
9 particular compound because applicants said that this 10:20:21
10 particular compound is not what applicants have in 10:20:33
11 mind.
12 MS. CARSON: I'm introducing Exhibit 3. 10:21:07
13 (Exhibit 3 was marked for identification by
14 the court reporter and is attached hereto.)
15 BY MS. CARSON:
16 Q. Let me know once you've been able to pull it 10:21:45
17 up. 10:21:47
18 A. I have it. 10:21:47
19 Q. One second, I'm trying to find the right 10:22:16
20 page. Okay. Could you turn to PDF page 62? 10:22:21
21 And by the way, did you review -- was this 10:22:28
22 one of the petitions that you reviewed before forming 10:22:36
23 your opinions? 10:22:38
24 A. Not in its entirety. 10:22:44
25 Q. So if you go to the bottom of the page -- it 10:22:46

Pictiva EX2016
Samsung v Pictiva
IPR2024-01095

1 says 55 but it is PDF page 62. 10:22:51
2 Are you there? 10:22:55
3 A. Yes. Page 55. 10:23:01
4 Q. And you see that the second sentence in the 10:23:02
5 first full paragraph there reads (as read): 10:23:07
6
7
8 The electron transport layer is 10:23:09
9 electron conducting and formed by 10:23:12
10 joint vaporization of (1) a metal 10:23:15
11 complex LIQ as an n-dopant. 10:23:21
12
13 Do you see that? And that's referring to 10:23:31
14 the diagram on the left, that's lithium Q, correct? 10:23:32
15 A. Yes. 10:23:48
16 MS. BAILY: Object to form. 10:23:48
17 BY MS. CARSON: 10:23:49
18 Q. And your construction of metal complex would 10:23:49
19 exclude lithium Q from being a metal complex, 10:23:54
20 correct? 10:23:59
21 MS. BAILY: Object to form. 10:23:59
22 THE WITNESS: Yes. 10:24:23
23 BY MS. CARSON: 10:24:24
24 Q. Were you aware that Samsung had taken the 10:24:24
25 position before the PTAB that lithium Q was a metal 10:24:26

Pictiva EX2016
Samsung v Pictiva
IPR2024-01095

complex when you formed your claim construction 10:24:30
opinion? 10:24:34
A. It is my understanding that the molecule 10:25:14
structure that shows the Liq originates in the Ma, 10:25:22
M-A, publication. And the Ma publication is not 10:25:52
subject to the disclaimer made by the applicants of 10:26:01
the '223 patent.
So we're talking about two different 10:26:12
contexts. That's all I'm saying. 10:26:15
Q. You understand this is a petition, an IPR 10:26:17
petition for the '223 patent, right? 10:26:20
A. Yes. 10:26:28
Q. And you understand that Samsung has taken 10:26:28
the position that within the context of the '223 10:26:29
patent for purposes of this IPR petition, lithium Q 10:26:32
is a metal complex? 10:26:38
MS. BAILY: Object to form. 10:26:49
THE WITNESS: I do not have enough context 10:26:50
to understand all the aspects that are involved here. 10:26:52
And I do not know if Samsung responded to something 10:27:00
else. 10:27:09
I do not have enough context. And I would 10:27:10
just need to have a closer look at this petition in 10:27:13
order to answer your question. 10:27:22
///

Pictiva EX2016
Samsung v Pictiva
IPR2024-01095

BY MS. CARSON: 10:27:24
Q. But your independent opinion is that within 10:27:24
the context of the '223 patent, lithium Q is not a 10:27:30
metal complex; is that correct? 10:27:37
MS. BAILY: Object to form. 10:27:41
THE WITNESS: It is my position that this 10:27:59
particular compound, lithium Q, has been disclaimed 10:28:01
by the applicants of the '223 patent. 10:28:07
BY MS. CARSON: 10:28:14
Q. And so therefore the claims of the '223 10:28:14
patent in your independent view would not include -- 10:28:17
strike that. 10:28:29
In your independent view, lithium Q could 10:28:31
not qualify as a metal complex within the context of 10:28:41
the '223 patent, correct? 10:28:44
MS. BAILY: Object to form. 10:28:50
THE WITNESS: Correct because applicants 10:28:52
have disclaimed this compound. 10:29:05
BY MS. CARSON: 10:29:12
Q. I want to move on to wherein the organic 10:29:12
compound coordinates to the metal complex due to the 10:29:17
joint vaporization. 10:29:20
This is on page 44 of your declaration. And 10:29:25
your proposed construction is (as read): 10:29:28

Pictiva EX2016
Samsung v Pictiva
IPR2024-01095

1 Wherein the organic compound 10:29:29
2 coordinates to the metal complex in 10:29:32
3 the gas phase after the organic 10:29:35
4 compound and the metal complex are 10:29:36
5 jointly vaporized. 10:29:38
6
7 Is that right? 10:30:09
8 A. Yes. 10:30:09
9 Q. Okay. You agree that "due to" in the claim 10:30:10
10 connotes causal relationship? 10:30:15
11 A. The wording "due to" indicates a causal 10:30:29
12 relationship. Yes, I agree. 10:30:31
13 Q. And would you agree that just because X 10:30:35
14 happens after Y does not mean that Y caused X? 10:30:45
15 MS. BAILY: Object to form. 10:30:53
16 THE WITNESS: In your example, Y may be 10:31:04
17 caused by X. Or Y may not be caused by X. 10:31:07
18 BY MS. CARSON: 10:31:12
19 Q. So the term "after" you used in your 10:31:13
20 proposed construction may indicate causation. But it 10:31:16
21 doesn't necessarily indicate causation; is that 10:31:20
22 right? 10:31:25
23 MS. BAILY: Object to form. 10:31:25
24 THE WITNESS: The word "after" in my 10:31:39
25 construction indicates that the two compounds need to 10:31:43

Pictiva EX2016
Samsung v Pictiva
IPR2024-01095

be in the vapor state. 10:31:57
For example, if we have two evaporation 10:32:09
sources that are physically separate, then 10:32:12
coordination between the two compounds cannot happen. 10:32:23
So the two compounds need to be accessible 10:32:28
to each other in the vapor phase. And when the 10:32:33
compounds are in their crucible or source container, 10:32:42
they are separate. 10:33:01
But after they have transitioned to the 10:33:04
vapor phase, for example, by evaporation, the two 10:33:08
compounds can access each other and can coordinate to 10:33:18
each other. 10:33:23
MS. CARSON: I'm going to move to strike 10:33:29
everything after vapor state. 10:33:30
Q. So this is just a simple question: "After" 10:33:32
does not mean caused by, correct? 10:33:35
MS. BAILY: Object to form. 10:33:39
THE WITNESS: In your example, if Y happens 10:33:59
after X, Y can be caused by X. Or Y may not be 10:34:18
caused by X. So both possibilities are available. 10:34:27
If we just look at the word "after," it 10:34:39
indicates a temporal sequence. And the compounds 10:34:48
need to enter the vapor state in order to coordinate 10:34:52
to each other. 10:35:00
///

Pictiva EX2016
Samsung v Pictiva
IPR2024-01095

BY MS. CARSON: 10:35:19
Q. Is your construction intended to exclude 10:35:19
situations where coordination occurs during joint 10:35:26
evaporation as opposed to at some point after joint 10:35:33
evaporation -- joint vaporization? 10:35:37
MS. BAILY: Object to form. 10:35:37
THE WITNESS: What my construction indicates 10:35:54
is that the organic compound and the metal complex 10:35:55
initially may be in a liquid or a solid state. In 10:36:01
that state, the two materials are physically 10:36:06
separated. 10:36:14
Now, once the two materials have transferred 10:36:24
to the vapor state and are in a joint space or are in 10:36:27
the same space above the evaporation sources, then 10:36:36
the two compounds have physical access to each other. 10:36:40
And when they have physical access to each other, 10:36:47
they can coordinate. 10:36:49
BY MS. CARSON:
Q. Do you dispute that coordination that 10:36:57
occurred during joint vaporization would satisfy the 10:36:59
claim --
(Reporter clarification.)
Do you dispute that coordination that 10:37:14
occurred during joint vaporization would satisfy the 10:37:20
claim under the construction? 10:37:25

Pictiva EX2016
Samsung v Pictiva
IPR2024-01095

MS. BAILY: Object to form. 10:37:30

THE WITNESS: During joint vaporization, the 10:37:54
way I see it is originally the two materials are in 10:38:01
their respective source containers. They may be in 10:38:05
the liquid state or solid state. 10:38:12

At that time in that state, no coordination 10:38:14
can occur because they are physically separated. 10:38:21
Once the two compounds have been vaporized, they are 10:38:26
in a vapor state or gas state. 10:38:32

And they are located in the same general 10:38:37
space. If they are located in the same space, the 10:38:40
molecules have access to each other and can 10:38:48
coordinate. 10:38:55

So I can say during the states where we have 10:38:57
both compounds in the vapor phase in the same space, 10:39:06
coordination can occur. 10:39:20

BY MS. CARSON: 10:39:45

Q. Is there a difference between simultaneous 10:39:45
vaporization and joint vaporization? 10:39:49

MS. BAILY: Object to form. 10:39:53

THE WITNESS: I would say it depends on the 10:40:20
context. I don't wish to over interpret words. 10:40:22

"Jointly vaporized" is one term. 10:40:26
"Simultaneously vaporized" is another term. 10:40:38

Joint vaporization in my understanding 10:40:46

Pictiva EX2016
Samsung v Pictiva
IPR2024-01095

1 conveys that we have two compounds and both of them 10:40:54
2 are vaporized. 10:41:06
3 Simultaneous vaporization, I would say is 10:41:12
4 pretty similar. We have two compounds and they are 10:41:22
5 initially in a liquid or solid state. And they are 10:41:24
6 transferred to the vapor state. And that happens at 10:41:30
7 the same time.
8 BY MS. CARSON: 10:41:44
9 Q. Could you take a look at column one, line 10:41:44
10 60, of the '223 patent? And there is a statement in 10:41:48
11 the patent there that (as read): 10:42:01
12
13 By virtue of the joint 10:42:02
14 vaporization of the metal complex 10:42:04
15 within organic compound, these two 10:42:08
16 compounds interact with one another 10:42:10
17 in the gas phase or when they meet 10:42:13
18 one another on a substrate surface. 10:42:16
19
20 Do you see that? 10:42:20
21 A. Yes. 10:42:26
22 Q. You'd agree that the specification 10:42:28
23 contemplates two different times when coordination 10:42:32
24 can occur by virtue of joint vaporization either in 10:42:34
25 the gas phase or when the compounds meet one another 10:42:38

Pictiva EX2016
Samsung v Pictiva
IPR2024-01095

on the substrate surface? 10:42:43
MS. BAILY: Object to form. 10:42:46
THE WITNESS: Based on my understanding, the 10:42:53
specification is broader than the claims. 10:42:55
BY MS. CARSON: 10:42:57
Q. Okay. 10:42:57
A. The specification that you point to is 10:42:58
broader than what is claimed. 10:43:05
Q. Okay, and claim 2, which is where the term 10:43:10
that you construed appears, doesn't specifically 10:43:17
mention the gas phase, correct? 10:43:20
MS. BAILY: Object to form. 10:43:34
THE WITNESS: I missed a few other words 10:43:34
that you said. 10:43:36
BY MS. CARSON: 10:43:38
Q. Claim 2, which contains the phrase that you 10:43:38
construed, does not specifically reference the gas 10:43:42
phase, correct? 10:43:46
MS. BAILY: Object to form.
THE WITNESS: Claim 2 includes the wording, 10:44:01
"due to joint vaporization?" Vaporization in my view 10:44:03
implies transitioning from the solid phase or liquid 10:44:15
phase to the gas phase. 10:44:23
BY MS. CARSON: 10:44:28
Q. So you in your construction limited claim 2 10:44:28

Pictiva EX2016
Samsung v Pictiva
IPR2024-01095

1 to the gas phase, correct? 10:44:32
2 MS. BAILY: Object to form. 10:44:45
3 THE WITNESS: In my construction, I said 10:45:07
4 that the coordination between the two compounds 10:45:10
5 occurs -- needs to occur in the gas phase when the 10:45:21
6 molecules have an opportunity to meet each other. 10:45:34
7 And that claim is based on -- the claim 10:45:45
8 interpretation is based on the wording, "Due to the 10:45:53
9 joint vaporization." 10:45:56
10 BY MS. CARSON: 10:46:06
11 Q. Are you familiar with the concept of claim 10:46:06
12 differentiation? 10:46:08
13 A. Yes. I have heard of it. 10:46:15
14 Q. Before you formed your opinions, did you 10:46:17
15 review the claims of the '223 patent to see whether 10:46:18
16 any of them mentioned "in the gas phase." 10:46:20
17 A. I reviewed all the asserted claims. 10:46:29
18 Q. Did you specifically check to see whether 10:46:34
19 any of them included the limitation, "in the gas 10:46:38
20 phase." 10:46:53
21 A. I reviewed all the claims. And kept all 10:46:53
22 relevant points in mind during my review. 10:46:57
23 MS. CARSON: Move to strike as 10:47:02
24 nonresponsive. 10:47:03
25 Q. If you could just answer. Did you review 10:47:03

Pictiva EX2016
Samsung v Pictiva
IPR2024-01095

the claims to see whether there were any claims that 10:47:05
referred specifically to coordination occurring in 10:47:09
the gas phase? 10:47:13
MS. BAILY: Object to form. 10:47:28
THE WITNESS: I reviewed all the claims. 10:47:31
And kept the relevant points in mind. 10:47:35
BY MS. CARSON: 10:47:38
Q. Do you know without going back and looking 10:47:41
whether there are any claims that specifically refer 10:47:43
to coordination occurring in the gas phase? 10:47:47
A. I do not know off the top of my head. 10:48:20
Q. Okay. Let's talk about "chain-like 10:48:23
structure" for a moment. And your construction for 10:48:26
"chain-like structure," is (as read): 10:48:39

A structure where two metal 10:48:43
complexes are linked by an organic 10:48:46
compound. Or a structure where two 10:48:48
organic compounds are linked by a 10:48:52
metal complex. 10:48:54

Would your construction -- or under your 10:49:01
interpretation of the claim, would a structure where 10:49:03
two metal complexes are linked by more than one 10:49:09
organic compound qualify as a chain-like structure? 10:49:15

Pictiva EX2016
Samsung v Pictiva
IPR2024-01095

MS. BAILY: Object to form. 10:49:28
THE WITNESS: So we moving to the next term, 10:49:33
"chain-like structure," correct? 10:49:36
BY MS. CARSON: 10:49:40
Q. That was what my question was about, yes. 10:49:40
A. On page 50 of my report? 10:49:42
Q. Yeah. 10:49:45
A. And can I hear the question again? 10:49:51
Q. Sure. The question is, is your proposed 10:49:53
construction intended to exclude a situation where 10:49:57
two metal complexes are linked by multiple organic 10:50:02
compounds as opposed to an organic compound? 10:50:05
MS. BAILY: Object to form. 10:50:22
THE WITNESS: And in that example, the 10:50:23
multiple organic compounds are bonded to each other? 10:50:24
BY MS. CARSON: 10:50:36
Q. Yes. 10:50:36
A. I don't see that bond between the two 10:50:48
organic compounds being contemplated in the '223 10:50:51
patent. We have oligo-mers, O-L-I-G-O-M-E-R-S. 10:50:56
And the number of subcomponents is limited 10:51:24
and specified to be approximately two to eight. And 10:51:42
I don't see those two organic compounds form a 10:52:05
connection via a chemical bond. I don't see this 10:52:13
concept that you are envisioning disclosed in the 10:52:16

Pictiva EX2016
Samsung v Pictiva
IPR2024-01095

'223 patent. 10:52:25
Q. So I'm just trying to get a simple answer as 10:52:25
to whether "chain-like" would include a situation 10:52:29
where you have metal complex, organic compound, 10:52:33
organic compound, metal complex in a row. 10:52:37
MS BAILY: Object to form.
THE WITNESS: Understood. So the organic 10:52:43
complex -- the organic compound has coordinated with 10:52:50
the metal complex. Then we have basically two 10:52:52
molecules. 10:52:57
But they are separate. I don't see -- in 10:53:01
your question, I don't see how are the two organic 10:53:06
compounds linked? I don't see that. 10:53:10
BY MS. CARSON: 10:53:15
Q. So it's your position that that wouldn't 10:53:15
constitute "chain-like." 10:53:17
A. Maybe I don't understand your question. If 10:53:25
you can show me in the '223 patent that there is a 10:53:28
bonding between the two organic compounds or between 10:53:38
two organic compounds contemplated, I may be able to 10:53:42
answer your question but -- 10:53:48
Q. I'm really, sir, just trying to understand 10:53:51
what your construction means. Because your 10:53:53
construction is, "a structure where two metal 10:53:54
complexes are linked by an organic compound. Or a 10:53:58

Pictiva EX2016
Samsung v Pictiva
IPR2024-01095

structure where two organic compounds are linked by a 10:54:01
metal complex." 10:54:06
So is it your position that the only thing 10:54:06
that would qualify as a chain-like structure under 10:54:09
the '223 patent is where there are three components 10:54:21
linked in one of the orders that you identify in your 10:54:25
construction? 10:54:29
MS. BAILY: Object to form. 10:54:33
BY MS. CARSON: 10:54:34
Q. Or can chain-like include more than those 10:54:34
three components? 10:54:38
MS. BAILY: Object to form. 10:54:41
THE WITNESS: So if we have those 10:54:50
configurations: Metal complex bonded to an organic 10:54:51
compound, then the organic compound is in turn bonded 10:54:58
to a metal complex. 10:55:02
If we have that configuration, then we have 10:55:07
a chain-like structure. Alternatively, if we have an 10:55:09
organic compound bonded to a metal complex and that
metal complex in turn is bonded to a second organic
compound, then we also have a chain-like structure.
BY MS. CARSON:
Q. And in your view, are those the only two
structures that qualify as chain-like?
MS. BAILY: Object to form.

Pictiva EX2016
Samsung v Pictiva
IPR2024-01095

THE WITNESS: I wouldn't characterize it as my view. I would characterize it as the view of the '223 patent, the specification of the '223 patent.

BY MS. CARSON:

Q. Your proposed construction would exclude any other structures, correct?

MS. BAILY: Object to form.

THE WITNESS: My construction for a chain-like structure to be present would need to have configurations as disclosed in the proposed construction. That is a series of metal complex, organic compound, metal complex. Or organic compound, metal complex, organic compound.

You can have other things. But for a chain-like structure, those are the configurations that are envisioned in the '223 patent.

BY MS. CARSON:

Q. So because of that, your opinion is chain-like structure is limited to only the specific configurations that you identify in your proposed construction, correct?

MS. BAILY: Object to form.

THE WITNESS: I follow that construction because it is based on the '223 patent.

///

Pictiva EX2016
Samsung v Pictiva
IPR2024-01095

BY MS. CARSON:

Q. So the answer is, yes, your construction is limited to just the precise configurations that are identified in the construction, no more, no less?

MS. BAILY: Object to form.

THE WITNESS: These configurations based on the '223 patent are required. You can have other configurations. But these configurations are the required configurations.

THE REPORTER: Rebecca, I need to go off the record because my Real Time stopped.

MS. CARSON: Sure.

VIDEO OPERATOR: Going off the record. The time is 12:58 p.m.

(Whereupon at the hour of 12:58 p.m., a luncheon recess was taken. The deposition was resumed at 1:41 11:42:00
p.m., the same persons being present.)
11:41:27
VIDEO OPERATOR: Back on the record. The 11:41:27
time is 1:41 p.m. 11:41:59
11:42:02

Pictiva EX2016
Samsung v Pictiva
IPR2024-01095

MS. CARSON: On the break, I added some 11:42:03
exhibits to the Exhibit Share folder. I want to 11:42:05
start with Exhibit 4, which is a copy of the '389 11:42:07
patent. 11:42:12
(Exhibit 4 was marked for identification by
the court reporter and is attached hereto.)
BY MS. CARSON:
Q. Could you open that one up? 11:42:14
A. Yes. 11:42:32
Q. If you could scroll back to the claims. And 11:42:33
in particular, I want to draw your attention to claim 11:42:35
34. 11:42:38
One of the elements of claim 34 is, 11:43:03
"selectively depositing at least one planarization 11:43:06
layer upon said devices," correct? 11:43:11
A. Correct. 11:43:17
Q. And you've provided a number of 11:43:17
constructions for terms within that limitation, 11:43:20
correct? 11:43:23
A. Yes. 11:43:29
Q. The term refers to "selectively depositing 11:43:30
at least one planarization layer." You agree that 11:43:37
that would encompass a situation where only one 11:43:46
planarization layer is deposited upon the devices? 11:43:50
A. Yes. 11:44:01

Pictiva EX2016
Samsung v Pictiva
IPR2024-01095

Q. And it would also encompass a situation 11:44:01
where multiple planarization layers are deposited 11:44:04
upon the devices? 11:44:07
A. Yes. 11:44:12
Q. And the first term from this limitation that 11:44:22
a you construed is, "upon said devices." 11:44:24
Is that right? On page 11 of your 11:44:30
declaration? 11:45:00
A. Yes. 11:45:00
Q. And you've opined that "upon said devices" 11:45:02
should be construed as "directly on said devices." 11:45:06
A. Yes. 11:45:13
Q. Just to be clear, it's your position that a 11:45:17
layer that is indirectly on the device would not meet 11:45:22
the limitation, correct? 11:45:25
MS. BAILY: Object to form. 11:45:30
THE WITNESS: A layer that is not directly 11:45:42
on the said devices would not meet the claim 11:45:45
limitation. 11:45:49
BY MS. CARSON: 11:45:49
Q. So under your proposed construction, is it 11:45:51
fair to say that only one planarization layer would 11:45:55
be able to be upon the device because only one of 11:46:02
them would be directly on the device? 11:46:05
MS. BAILY: Object to form. 11:46:08

Pictiva EX2016
Samsung v Pictiva
IPR2024-01095

THE WITNESS: If we have two planarization 11:46:20
layers as contemplated in claim 34, then the group of 11:46:24
planarization layers would need to be directly on 11:46:43
said devices. 11:46:48
BY MS. CARSON: 11:46:53
Q. So it's your position that if there are 11:46:53
multiple planarization layers, the second or third or 11:46:57
fourth layer would still be upon the device under 11:47:04
your construction even though it's not directly 11:47:07
touching the devices? 11:47:10
MS. BAILY: Object to form. 11:47:15
THE WITNESS: No. My opinion is that if we 11:47:20
have a group of planarization layers, such as two 11:47:23
planarization layers, then the group of planarization 11:47:29
layers needs to be directly on and in contact with 11:47:37
said devices. 11:47:43
BY MS. CARSON: 11:47:47
Q. In a situation where there are multiple 11:47:47
planarization layers, only one layer would directly 11:47:50
touch the device, correct? 11:47:53
MS. BAILY: Object to form. 11:47:58
THE WITNESS: Only the bottom part of the 11:48:11
lower-most planarization layer would touch said 11:48:15
devices. 11:48:25
/// 11:48:26

Pictiva EX2016
Samsung v Pictiva
IPR2024-01095

BY MS. CARSON:
Q. And the other planarization layers in the 11:48:27
group of planarization layers would be indirectly on 11:48:32
the device via the intervening first planarization 11:48:34
layer, correct? 11:48:40
MS. BAILY: Object to form. 11:48:50
THE WITNESS: The way I look at it is that 11:48:51
the group of planarization layers, such as two 11:48:53
planarization layers, would be directly on and in 11:49:00
contact with said devices. 11:49:10
BY MS. CARSON: 11:49:16
Q. But the only one that would directly contact 11:49:16
the said devices would be the bottom planarization 11:49:20
layer, correct? 11:49:24
MS. BAILY: Object to form. 11:49:34
THE WITNESS: If there are two planarization 11:49:39
layers or a group of planarization layers, then the 11:49:41
group is directly on and in contact with said devices 11:49:45
in this example. 11:49:54
BY MS. CARSON: 11:49:56
Q. So in a situation where there's a group of 11:49:56
planarization layers, it would be your position that 11:50:00
the second layer could still satisfy your 11:50:05
construction because the group is directly on the 11:50:11
devices? 11:50:18

Pictiva EX2016
Samsung v Pictiva
IPR2024-01095

MS. BAILY: Object to form. 11:50:18
THE WITNESS: No. My position is that if 11:50:30
there is a group of planarization layers and the 11:50:34
group of planarization layers is directly on and in 11:50:40
contact with said devices, then the claim limitation 11:50:49
is met. 11:50:57
BY MS. CARSON: 11:51:05
Q. And the part of the group of planarization 11:51:05
layers that would be directly in contact with the 11:51:07
said devices would be the bottom layer, correct? 11:51:09
MS. BAILY: Object to form. 11:51:14
THE WITNESS: I would view it as the group 11:51:20
being directly on and in contact with said devices. 11:51:21
BY MS. CARSON: 11:51:33
Q. Does the patent use the term group of 11:51:33
planarization layers -- actually we can strike that. 11:51:36
I don't want to waste the time because we're running 11:52:25
short on time. 11:52:27
So when a planarization layer is 11:52:29
deposited -- strike that. 11:52:34
Do you deposit one planarization layer at a 11:52:35
time? Or a group of planarization layers typically? 11:52:39
MS. BAILY: Object to form. 11:52:49
THE WITNESS: It may depend on the 11:52:58
circumstances. It may depend on the intention of the 11:52:59

Pictiva EX2016
Samsung v Pictiva
IPR2024-01095

1 person of skill performing the process. 11:53:06
2 BY MS. CARSON: 11:53:19
3 Q. And in a situation where -- strike that. 11:53:21
4 So claim 34 doesn't specify whether in a 11:53:24
5 device that has multiple planarization layers, 11:53:30
6 whether they need to be deposited one at time or all 11:53:35
7 together, correct? 11:53:38
8 MS. BAILY: Object to form. 11:54:01
9 THE WITNESS: I'm not sure if I understand 11:54:03
10 the question. If we have multiple planarization 11:54:05
11 layers -- 11:54:11
12 BY MS. CARSON: 11:54:11
13 Q. Okay. Let's backup. 11:54:11
14 Suppose you have a system where one 11:54:15
15 planarization is selectively deposited on the 11:54:21
16 devices? 11:54:26
17 Are you with me? 11:54:26
18 A. Yes. 11:54:29
19 Q. And then subsequently a second planarization 11:54:33
20 layer is selectively deposited on top of the first 11:54:37
21 planarization layer. 11:54:42
22 Under your construction, would that second 11:54:46
23 layer be "upon said devices." Or would it be upon 11:54:49
24 the first planarization layer? 11:54:58
25 MS. BAILY: Object to the form. 11:55:03

Pictiva EX2016
Samsung v Pictiva
IPR2024-01095

THE WITNESS: The example that you propose would practice the limitation in my opinion. 11:55:04 11:55:07

BY MS. CARSON: 11:55:17

Q. So the second planarization layer that I mentioned could be used to satisfy the claim? 11:55:17 11:55:21

MS. BAILY: Object to form. 11:55:30

BY MS. CARSON: 11:55:30

Q. In my example. 11:55:31

A. I don't think so. I would say that if there are two planarization layers and the two planarization layers have been deposited directly on and in contact with the devices, then these two planarization layers fall within the spirit and word of the claim limitation that we are talking about. 11:55:32 11:55:37 11:55:41 11:55:45 11:55:50 11:55:56

Q. Even though only one of them is directly touching the devices, correct? 11:56:03 11:56:06

MS. BAILY: Object to form. 11:56:13

THE WITNESS: In my view, the two layers or the two planarization layers considered collectively -- considered collectively that it's the group of planarization layers is deposited directly on and in contact with the devices. 11:56:13 11:56:16 11:56:25 11:56:33 11:56:41

And for that reason, meets the claim limitation. 11:56:44 11:56:49

/// 11:56:49

Pictiva EX2016
Samsung v Pictiva
IPR2024-01095

BY MS. CARSON:
Q. Which layer in the group directly touches 11:56:49
the devices? 11:56:52
MS. BAILY: Object to form. 11:56:58
THE WITNESS: The touching is enabled by the 11:57:17
devices being in physical contact with the two 11:57:20
planarization layers that we're considering here. 11:57:29
BY MS. CARSON: 11:57:32
Q. Do the devices in that scenario physically 11:57:32
touch those layers? 11:57:37
A. I would phrase it in the following way: The 11:57:51
devices touch and are in contact with the bottom part 11:57:59
or the bottom surface of the two planarization 11:58:05
layers. 11:58:13
Q. You'd agree with me that the devices don't 11:58:13
touch any part of the second layer in that scenario, 11:58:17
correct? 11:58:28
MS. BAILY: Object to form. 11:58:28
THE WITNESS: I think it would be useful to 11:58:29
look at the whole picture. And if we look at the 11:58:31
whole picture, we look at the two planarization 11:58:36
layers. 11:58:41
We look at them as a group. Or we look at 11:58:41
them as two of them. And the planarization layers or 11:58:46
the group of planarization layers is in contact with 11:58:56

Pictiva EX2016
Samsung v Pictiva
IPR2024-01095

and is directly on said devices. 11:59:06

MS. CARSON: So move to strike as 11:59:11

nonresponsive. I want you to listen really closely 11:59:13

to my question 'cause I'm not asking whether it's in 11:59:16

contact with some part of the group. 11:59:19

Q. I'm asking a really simple question. Are 11:59:21

the devices in direct physical contact with the 11:59:24

second planarization layer? 11:59:28

MS. BAILY: Object to form. 11:59:37

THE WITNESS: It is in physical contact with 11:59:40

the said devices. And that includes -- the group 11:59:43

includes the first planarization layer and the second 11:59:49

planarization layer. 11:59:53

MS. CARSON: Move to strike as 11:59:59

nonresponsive.

Q. You're still not answering my question. My 12:00:00

question is not with the group. My question is just 12:00:03

if we're considering only that second planarization 12:00:06

layer. 12:00:09

Does that second planarization layer 12:00:10

physically touch the devices? 12:00:12

MS. BAILY: Object to the form. 12:00:19

THE WITNESS: A person of skill would look 12:00:34

at the planarization layers collectively. And come 12:00:36

to the conclusion that they are in physical contact 12:00:47

Pictiva EX2016
Samsung v Pictiva
IPR2024-01095

and directly on said devices. 12:00:53
BY MS. CARSON: 12:00:59
Q. Are you refusing to answer my question, sir? 12:00:59
I'm not asking you about the group. I'm asking about 12:01:02
the second layer. Does the second layer touch the 12:01:05
devices? 12:01:08
MS. BAILY: Object to form. Argumentative. 12:01:09
Asked and answered. 12:01:11
THE WITNESS: If the second planarization 12:01:32
layer is directly on the first planarization layer. 12:01:33
And the first planarization layer is directly on said 12:01:42
devices, then the planarization layers, plural, are 12:01:47
in direct contact and directly on said devices. 12:01:59
BY MS. CARSON: 12:02:06
Q. Is the second planarization layer, singular, 12:02:07
directly on the said devices in that scenario? 12:02:11
MS. BAILY: Same objection. 12:02:23
THE WITNESS: The two planarization layers, 12:02:30
including the first and the second planarization 12:02:34
layer, are in physical contact and directly on said 12:02:37
devices in this example. 12:02:45
BY MS. CARSON: 12:02:49
Q. So for the ladies and gentlemen of the jury, 12:02:49
you are either unable or unwilling to answer my 12:02:53
question as to whether just the second planarization 12:02:57

Pictiva EX2016
Samsung v Pictiva
IPR2024-01095

layer in that scenario is in physical contact with 12:03:00
the said devices. 12:03:03
MS. BAILY: All the same objections. You're 12:03:07
mischaracterizing the testimony. You're arguing with 12:03:09
the witness. He's already answered the question, Ms. 12:03:11
Carson. 12:03:13
THE WITNESS: I will be happy to convey my 12:03:14
view to the jury that if there is more than one 12:03:27
planarization layer, and the two planarization layers 12:03:30
are deposited sequentially, then the bottom surface 12:03:35
of the two planarization layers are directly on and 12:03:50
in physical contact with said devices, which in my 12:03:55
opinion satisfies the claim limitation. 12:04:05
BY MS. CARSON: 12:04:26
Q. Could you take a look at figure 1? You 12:04:26
there? 12:04:41
A. Yes. 12:04:42
Q. Is layer 110 upon the devices? 12:04:42
MS. BAILY: Object to form. 12:05:00
THE WITNESS: Layer 110 is directly on and 12:05:58
in contact with layer 108. 12:06:04
BY MS. CARSON: 12:06:19
Q. Are you finished? 12:06:19
A. Yes. 12:06:20
Q. So in this scenario, would layer 110 satisfy 12:06:20

Pictiva EX2016
Samsung v Pictiva
IPR2024-01095

your construction of "upon the devices." 12:06:26
MS. BAILY: Object to form. 12:06:38
THE WITNESS: I understand that layer 108 is 12:06:59
a barrier layer. And a barrier layer is not really 12:07:03
part of a device. But it's the barrier layer. 12:07:24
So in this particular case, layer 110 is not 12:07:28
directly on the device. But rather directly on the 12:07:48
barrier layer 108. 12:07:52
BY MS. CARSON: 12:08:08
Q. So is your answer, no, 110 would not satisfy 12:08:08
your construction of being upon the devices? 12:08:13
MS. BAILY: Object to the form. 12:08:52
THE WITNESS: Correct. 12:08:53
BY MS. CARSON: 12:08:54
Q. Your position that "upon" requires 12:08:54
depositing the planarization layer directly on the 12:08:57
devices is based on an argument that the applicant 12:09:00
disclaimed the position that "upon" could mean 12:09:08
indirectly on when it distinguished the Fujii 12:09:10
reference in the prosecution history, correct? 12:09:14
A. Yes. 12:09:26
Q. And in particular, you point to figures 1A 12:09:26
and 1B of the Fujii reference. And those are 12:09:29
depicted on page 13 of your declaration? 12:09:34
A. Yes. 12:09:44

Pictiva EX2016
Samsung v Pictiva
IPR2024-01095

Q. Fujii discloses a method for forming 12:09:45
fluorescent screens of a plasma display, correct? 12:09:53
A. I don't recall at the moment if Fujii 12:10:08
discloses a plasma display. But it discloses a 12:10:10
display. 12:10:17
Q. Is it your understanding that the two 12:10:22
figures that you show on page 13 show the full method 12:10:23
that was disclosed by Fujii? 12:10:32
MS. BAILY: Object to form. 12:10:50
THE WITNESS: The two figures show part of 12:10:51
the process where a layer 4 is deposited on an 12:10:58
underlaying structure, underlying structure. 12:11:08
BY MS. CARSON: 12:11:17
Q. There's several additional steps in the 12:11:17
method disclosed by Fujii, correct? 12:11:22
A. Can I hear the question again? 12:11:32
Q. There are several subsequent steps in the 12:11:33
method disclosed by Fujii that occur after 1A and 1B, 12:11:35
correct? 12:11:41
A. I would need a copy of the Fujii patent to 12:11:47
be sure. But probably additional steps follow the 12:11:57
figure 1B image. 12:12:11
Q. Do you know whether the portion you include 12:12:13
in your report constitute the whole figure 1? 12:12:18
MS. BAILY: Object to form. 12:12:29

Pictiva EX2016
Samsung v Pictiva
IPR2024-01095

THE WITNESS: I do not recall at the moment. 12:12:40
I reviewed a lot of prior art articles. And I do not 12:12:42
recall at the moment. 12:12:45
BY MS. CARSON: 12:12:46
Q. Was Fujii one of the references that you 12:12:46
read in it's entirety? 12:12:48
A. No. I read it with respect to the relevant 12:12:59
parts. 12:13:04
Q. So on you didn't read the whole reference, 12:13:05
right? 12:13:14
A. That is probably correct. I have not read 12:13:16
the Fujii reference in its entirety. I limited my 12:13:19
review to relevant parts. 12:13:25
MS. CARSON: Okay. Could you take a look at 12:13:28
Exhibit 5, which is the Fujii reference. 12:13:33
(Exhibit 5 was marked for identification by
the court reporter and is attached hereto.)
BY MS. CARSON:
Q. And you'll see on page two of the PDF that's 12:13:53
where figures 1A and 1B come from, correct? 12:13:58
A. Yes. 12:14:07
Q. And you'll see there's additional steps 1C 12:14:07
through you 1H depicted, correct? 12:14:12
A. Yes. 12:14:29
Q. And the planarization layer or the alleged 12:14:30

Pictiva EX2016
Samsung v Pictiva
IPR2024-01095

planarization layer that was discussed in the 12:14:39
prosecution history was item 4, correct, of the 12:14:42
photoresist? 12:14:48
A. Correct. 12:14:53
Q. And in Fujii, the photoresist is selectively 12:14:54
removed after UV curing, correct? 12:14:59
A. It appears that way. 12:15:05
Q. And once we get to step 1D and beyond, the 12:15:32
photoresist is not above the devices, which are 12:15:43
depicted as 9, correct? 12:15:47
MS. BAILY: Object to form. 12:15:55
THE WITNESS: Can I hear the question again? 12:16:03
By MS. CARSON: 12:16:06
Q. Once we get to step 1D and beyond in Fujii, 12:16:06
the photoresist is not above the devices, which are 12:16:10
depicted as item 9, correct? 12:16:17
MS. BAILY: Object to form. 12:16:30
THE WITNESS: You say feature 7 is not above 12:16:44
feature 9? 12:16:47
BY MS. CARSON: 12:16:48
Q. Correct. 12:16:48
A. The way I look at figure 1D, I see feature 7 12:16:56
being at a higher level than feature 9. And being at 12:17:02
a higher level, one may describe as above or at a 12:17:09
higher level. 12:17:22

Pictiva EX2016
Samsung v Pictiva
IPR2024-01095

Q. So it's your position that in figure 1D, 12:17:24
item 7 is on or above item 9? 12:17:35
MS. BAILY: Object to form. 12:17:49
THE WITNESS: I just would like to clarify 12:18:15
your usage of "on." And so "on" we are not talking 12:18:18
about upon, right, I mean, not directly on. 12:18:31
So you're just saying on. And so on 12:18:34
means -- can mean directly on or indirectly on. 12:18:38
BY MS. CARSON:
Q. So either one of those, right? I'm just 12:18:48
trying to like see what you're saying. 12:18:50
So are you saying that when you view figure 12:18:53
1D, it is your professional opinion that item 7 is on 12:18:57
either directly or indirectly item 9? 12:19:11
MS. BAILY: Object to form. 12:19:24
THE WITNESS: I can readily answer your 12:19:25
question if you go to figure 1C. 12:19:27
BY MS. CARSON: 12:19:32
Q. Please so I don't have to move to strike and 12:19:33
we don't waste more time. Just focus on my question: 12:19:35
In figure 1D, is item 7, in your professional expert 12:19:38
opinion, on either directly or indirectly item 9, the 12:19:42
devices? 12:19:50
MS. BAILY: Object to form. 12:19:53
THE WITNESS: It's a little bit a boundary 12:19:54

Pictiva EX2016
Samsung v Pictiva
IPR2024-01095

case. 12:19:59
If we take the middle of feature 9, and if 12:20:07
we would draw a vertical line that goes upward, we 12:20:16
would not have that line intersect feature number 7. 12:20:26
However, if we consider on or above to mean 12:20:30
just to be at a higher level, then I would say 12:20:41
feature number 7 is at a higher level than feature 12:20:46
number 9. 12:20:53
MS. CARSON: Move to strike everything from 12:20:55
"however" on. 12:20:57
MS. BAILY: Obviously we'll oppose that. 12:21:02
And the other motions to strike. 12:21:04
BY MS. CARSON: 12:21:26
Q. What is your understanding of what it means 12:21:26
to make something more planar? 12:21:28
MS. BAILY: Object to form. 12:21:34
THE WITNESS: To make something more planar, 12:22:00
could imply to make it more plane-like. 12:22:03
BY MS. CARSON: 12:22:16
Q. Is another word for that "flatter"? 12:22:16
MS. BAILY: Object to form. 12:22:22
THE WITNESS: One could express it in this 12:22:35
manner. But there is no requirement to express it in 12:22:38
this manner. 12:22:43
///

Pictiva EX2016
Samsung v Pictiva
IPR2024-01095

BY MS. CARSON:
Q. That's how you, yourself, expressed it in your declaration, correct? 12:22:46 12:22:48
MS. BAILY: Object to form. 12:22:55
BY MS. CARSON: 12:22:56
Q. If we look at paragraph 56, you state (as read): 12:22:57

The '389 patent makes clear throughout that the material in that planarization layer acts to add a layer on top of another layer that makes the surface more planar or flatter. 12:22:59 12:23:02 12:23:04 12:23:06 12:23:09 12:23:11

Correct? 12:23:12
MS. BAILY: Object to form. 12:23:19
THE WITNESS: What paragraph?
BY MS. CARSON: 12:23:23
Q. 56. 12:23:23
A. Yes, correct. 12:23:40
Q. It's your position that if a layer of material provides a more planar or flatter surface but it doesn't interrupt the propagation of defects from one layer to another that would not count as a 12:23:41 12:23:46 12:23:55 12:23:59

Pictiva EX2016
Samsung v Pictiva
IPR2024-01095

planarization layer within the context of the '389 patent, correct? 12:24:03 12:24:06

MS. BAILY: Object to form. 12:24:12

THE WITNESS: If the propagation of defects is not interrupted, if the defects propagate, then the planarization layer does not meet its intended purpose and would not qualify as planarization layer as claimed. 12:24:30 12:24:33 12:24:47 12:24:53 12:25:00

BY MS. CARSON:

Q. Under your construction, a layer would only qualify as a planarization layer if it both interrupts the propagation of defects from one layer to another layer as well as -- does it reproduce the topography of the underlying layer, correct? 12:25:05 12:25:07 12:25:11 12:25:15 12:25:24

A. Can I hear the question again? 12:25:39

Q. Sure. It was kind of a bad question. So I'll rephrase. 12:25:40 12:25:43

I'm just trying to get at whether if a layer interrupts the propagation of defects from one layer to another but it doesn't -- but it reproduces the topography of the underlying layer, that wouldn't be enough under your construction to count as a planarization layer, correct? 12:25:43 12:25:51 12:25:54 12:25:58 12:26:02 12:26:06

MS. BAILY: Object to form. 12:26:11

THE WITNESS: I generally agree that both 12:26:25

Pictiva EX2016
Samsung v Pictiva
IPR2024-01095

conditions need to be met. One condition is the 12:26:27
interruption of defects. And the other condition is 12:26:30
the planarization aspect that is the topography of 12:26:35
the underlayer, of the underlying layer is not 12:26:40
reproduced. 12:26:51
BY MS. CARSON: 12:26:51
Q. So just to be clear, if you have a layer 12:26:51
that makes it flatter and it interrupts the 12:26:55
propagation defects, but it reproduces the topography 12:26:58
of the underlying layer, that would not qualify as a 12:27:03
planarization layer under your construction, correct? 12:27:06
MS. BAILY: Object to form. 12:27:17
THE WITNESS: If it is a conforming layer, 12:27:18
if it reproduces the topography of the underlying 12:27:21
layer, then it would not meet the claim limitation, I 12:27:27
agree. 12:27:34
MS. CARSON: So can you take a look at 12:27:36
Exhibit 6. 12:28:02
(Exhibit 6 was marked for identification by
the court reporter and is attached hereto.)
BY MS. CARSON:
Q. Exhibit 6 is US Patent Application 12:28:03
Publication number US2002/0140347. 12:28:07
Have you seen this before? 12:28:17
A. It looks somewhat familiar. But I'm not 100 12:28:46

Pictiva EX2016
Samsung v Pictiva
IPR2024-01095

1 percent sure. 12:28:51
2 Q. If you could look at figure 6. 12:28:51
3 A. Yes. 12:29:01
4 Q. Do you agree that layer 151A reproduces the 12:29:07
5 topology of the underlying layer 140? 12:29:15
6 MS. BAILY: Object to form. 12:29:25
7 THE WITNESS: Can I hear the question again? 12:29:54
8 BY MS. CARSON: 12:29:56
9 Q. Do you agree that layer 151A reproduces the 12:29:57
10 topology of the underlying layer 140? 12:30:01
11 MS. BAILY: Object to form. 12:30:12
12 THE WITNESS: I heard you use the word 12:30:13
13 topology. That's not the word I used. I used 12:30:16
14 topography. 12:30:26
15 BY MS. CARSON: 12:30:27
16 Q. Sorry. Does 151A reproduce the topography 12:30:27
17 of the underlying layer 140? 12:30:31
18 MS. BAILY: Object to the form. 12:30:51
19 THE WITNESS: That's not really something I 12:30:52
20 opined on in my expert report. 12:30:53
21 BY MS. CARSON: 12:30:56
22 Q. You're not able to tell from looking at the 12:30:56
23 diagram that it reproduces the corners there? 12:30:58
24 MS. BAILY: Object to form. 12:31:06
25 THE WITNESS: Well, I understand that the 12:31:13

Pictiva EX2016
Samsung v Pictiva
IPR2024-01095

'389 patent has some statements about metal layers 12:31:19
and potentially about the conformality of metal 12:31:25
layers. 12:31:36
And at the present time, I do not know what 12:31:42
151A is. It looks like a conformal layer to me -- 12:31:45
(Reporter clarification.)
-- conformal layer to me. So I have not 12:32:00
formed an opinion -- expressed an opinion on this 12:32:08
particular patent. 12:32:16
And given that there are various statements 12:32:20
in the '389 patent relating to metal layers and what 12:32:22
constitutes a planarization layer and what doesn't, I 12:32:28
would hesitate to make -- to express an opinion here. 12:32:36
For example, I do not know if 151A is an 12:32:49
organic layer? Or what kind of layer it is. 12:32:56
BY MS. CARSON: 12:33:02
Q. So the specification of this patent 12:33:02
describes it as a polymer layer. 12:33:05
MS. BAILY: Object to form. 12:33:25
BY MS. CARSON: 12:33:26
Q. I'm assuming that layer 151A is a polymer 12:33:26
layer. Would you agree that it reproduces the 12:33:30
topography of the underlying layer 140? 12:33:37
MS. BAILY: Object to form. 12:33:40
THE WITNESS: It's not an opinion that I 12:34:01

Pictiva EX2016
Samsung v Pictiva
IPR2024-01095

1 write up in my report. I don't think the Weaver 12:34:06
2 application is a publication that I relied on. 12:34:10
3 This is a complex subject matter. And I 12:34:21
4 hesitate to give an answer that does not take into 12:34:25
5 account all the aspects that are disclosed in the 12:34:30
6 '389 patent. 12:34:37
7 I would need to study this in greater 12:34:38
8 detail. And a quick answer may not do justice to the 12:34:42
9 complexity of the matter at hand. 12:34:56
10 BY MS. CARSON: 12:34:58
11 Q. Yeah, I'm just trying to get a sense of how 12:34:58
12 you would apply your construction. So if you were 12:35:00
13 attempting to apply your construction of 12:35:04
14 planarization layer to layer 151A, would it meet your 12:35:08
15 construction? 12:35:15
16 MS. BAILY: Object to form. 12:35:18
17 THE WITNESS: At this point, I have no 12:35:29
18 knowledge on the ability of layer 151A to interrupt 12:35:30
19 defects such as dust particles. 12:35:42
20 BY MS. CARSON: 12:35:52
21 Q. Are you able to tell whether it reproduces 12:35:52
22 the topography of the underlying layer by looking at 12:35:55
23 the diagram? 12:35:59
24 MS. BAILY: Object to form. 12:36:02
25 THE WITNESS: To answer your question, I 12:37:30

Pictiva EX2016
Samsung v Pictiva
IPR2024-01095

1 would like to review the relevant parts of the Weaver 12:37:32
2 patent in greater detail. 12:37:41
3 As shown, I would assume that at some point 12:37:44
4 layer 151 would have extended further to the right or 12:37:52
5 to the left. The structure that is shown here is 12:37:57
6 somewhat schematic. It is like an artist's view. 12:38:02
7 And if we would have -- if I would have the 12:38:13
8 real structure as it practically occurs on a wafer -- 12:38:20
9 if I would have access to that information, I could 12:38:28
10 more easily answer your question. 12:38:34
11 BY MS. CARSON: 12:38:36
12 Q. How about 152C? Does that layer reproduce 12:38:36
13 the topography of the underlying layer 151C? Or 12:38:47
14 would you also have to look at the actual wafer to 12:38:50
15 determine it for that layer? 12:38:54
16 MS. BAILY: Object to form. 12:38:58
17 THE WITNESS: I would have to look at the 12:39:03
18 patent in greater detail. And also at the '389 12:39:04
19 patent because there are some specific statements 12:39:07
20 about metal layers and conformal depositions. 12:39:11
21 And I think figure 6 looks like a sketch to 12:39:17
22 me. This is how I envision it. The inventor might 12:39:25
23 have drawn the structure as the inventor envisioned 12:39:32
24 the structure rather than as the structure ultimately 12:39:37
25 looks like in practice. 12:39:47

Pictiva EX2016
Samsung v Pictiva
IPR2024-01095

BY MS. CARSON: 12:39:51
Q. So if all one had was this figure to 12:39:51
evaluate whether the topography was reproduced, 12:39:58
you're saying that wouldn't be possible just based on 12:40:01
looking at this figure alone without more 12:40:04
information? 12:40:06
MS. BAILY: Object to form. 12:40:19
THE WITNESS: To give you a good answer, I 12:40:20
would like to see how Weaver for this '347 patent 12:40:30
describes figure 6. 12:40:42
And I would also like to see the specific 12:40:47
disclosures of the '389 patent with respect to 12:40:53
conformal layers or metal layers. 12:41:00
And it was not part of my expert report. 12:41:06
And was not an opinion that I rendered in my expert 12:41:12
report. 12:41:17
So I would appreciate the opportunity to 12:41:18
have a closer look at Weaver for the '347 patent and 12:41:24
also the '389 patent to express or to articulate -- 12:41:33
to find my opinion. 12:41:38
BY MS. CARSON: 12:41:42
Q. Can you turn your attention real quick to 12:41:42
figure 5? 12:41:46
A. Yes. 12:41:52
Q. In your expert opinion, does this figure 5 12:41:52

Pictiva EX2016
Samsung v Pictiva
IPR2024-01095

1 show the topography of any of the layers shown? 12:41:57
2 MS. BAILY: Object to form. 12:42:04
3 THE WITNESS: If I look at these images, 12:42:31
4 they look like boundary cases to me. 12:42:33
5 For example, if the top surface of a 12:42:40
6 planarization layer is completely flat, then it would 12:42:44
7 be easier to answer your question. And I would say 12:42:53
8 that the topography in that case is not reproduced. 12:42:57
9 But the topography has become flatter. 12:43:06
10 And if we have another situation where let's 12:43:15
11 say we have a metal layer and that a metal layer 12:43:30
12 deposits just on the top of a island or feature but 12:43:42
13 not on the side walls, then such a metal layer would 12:43:56
14 not be considered a planarization layer. 12:44:03
15 And it is in fact excluded as a 12:44:09
16 planarization layer in the '389 patent. 12:44:11
17 BY MS. CARSON: 12:44:21
18 Q. Could you take a look at paragraph 58 of 12:44:21
19 your report or your declaration? 12:44:23
20 A. Yes. 12:44:39
21 Q. In paragraph 58, you note some statements by 12:44:39
22 the application in a July 19th, 2004 response to a 12:44:43
23 non-final rejection. 12:44:52
24 Is it your position that this statement is a 12:44:59
25 disclaimer of planarization layers that do not 12:45:06

Pictiva EX2016
Samsung v Pictiva
IPR2024-01095

interrupt the propagation of defects from one layer 12:45:09
to another layer? 12:45:12
MS. BAILY: Object to form. 12:46:24
BY MS. CARSON:
Q. Are you able to answer my question? 12:46:25
A. Yes. I have been trying to see which is the 12:46:26
sealing material, sealing material, seal, like a 12:46:35
seal, sealing material, 20 prime. 12:46:41
And I have looked at my report to find out 12:46:45
to -- to identify the sealing material 20 prime. And 12:46:50
that's taken some time because the statement that the 12:46:56
applicants made is that this particular layer, the 12:47:06
sealing material 20, is not a planarization layer 12:47:17
since it does not -- since it is not used to 12:47:21
interrupt the propagation of defects. 12:47:27
To me, this statement means that the 12:47:31
propagation of defects from one layer to another 12:47:44
layer must not occur for the planarization layers 12:47:47
envisioned by the inventors. 12:48:05
Q. Do you know if the inventors distinguished 12:48:09
this particular reference or the sealing material 20 12:48:11
in any other ways? 12:48:18
MS. BAILY: Object to form. 12:48:46
THE WITNESS: To answer your question, I 12:48:46
would need to have a look at the July 19, 2004 12:48:47

Pictiva EX2016
Samsung v Pictiva
IPR2024-01095

1 response by the applicants. 12:48:54
2 MS. CARSON: Why don't we look at it, 12:49:08
3 Exhibit 7. 12:49:11
4 (Exhibit 7 was marked for identification by
5 the court reporter and is attached hereto.)
6 BY MS. CARSON:
7 Q. And page 283. 12:49:14
8 A. I have it. 12:49:34
9 Q. So on page 283, this is where your quote 12:49:36
10 comes from, correct? And you'll note that the 12:49:39
11 sealing material, the applicant described as an 12:49:43
12 adhesive. 12:49:47
13 Do you see that?
14 A. 283? 12:49:55
15 Q. Yeah, page 283. About the middle of the 12:49:55
16 first paragraph, you'll see the applicant stated (as 12:49:58
17 read):
18
19 Rather than being a planarization 12:50:01
20 layer, the sealing material 20 of 12:50:02
21 Boronson is an adhesive that's used 12:50:06
22 to bond the encapsulation enclosure 12:50:08
23 30 to the substrate 10? 12:50:11
24
25 Do you see that. 12:50:13

Pictiva EX2016
Samsung v Pictiva
IPR2024-01095

A. Are you saying 283 or 383? 12:50:14
Q. 283. 12:50:17
A. 283. And you reading from the first 12:50:38
paragraph?
Q. You see in the middle of the paragraph, 12:50:39
there's a word that's underlined that says adhesive? 12:50:41
A. I do. 12:50:45
Q. So the applicant said (as read): 12:50:45

Rather than being a planarization 12:50:46
layer, the sealing material 20 of 12:50:48
Boronson is adhesive that's used to 12:50:51
bond the encapsulation enclosure 30 12:50:54
to the substrate 10. 12:50:57

Do you see that? 12:51:00
A. Yes. 12:51:06
Q. Do you also see down a few sentences, it 12:51:06
says, "the sealing material 20 of Boronson is not 12:51:08
deposited upon said devices as specified in claim 12:51:12
one." 12:51:15
Do you see that? 12:51:16
A. Yes. 12:51:28
Q. So would you agree with me, sir, that the 12:51:29
applicant distinguished this Boronson reference on 12:51:31

Pictiva EX2016
Samsung v Pictiva
IPR2024-01095

1 grounds other than the facts or in addition to the 12:51:33
2 facts that the sealing material 20 is not used to 12:51:36
3 interrupt the propagation of defects from one layer 12:51:41
4 to another layer? 12:51:44
5 MS. BAILY: Object to form. 12:51:53
6 THE WITNESS: Generally, yes, I would say 12:51:56
7 that the applicants identified more than one 12:51:58
8 difference. One of the differences being that the 12:52:05
9 layer 20 could not serve as a planarization layer 12:52:15
10 because it does not interrupt the propagation of 12:52:25
11 defects such as dust particles. 12:52:28
12 BY MS. CARSON: 12:52:43
13 Q. So the difference that you identified in 12:52:43
14 paragraph 58 of your report was just one of multiple 12:52:58
15 differences that the applicant identified in this 12:53:03
16 remarks? 12:53:12
17 A. I generally agree. And I focused on the 12:53:31
18 statements that I thought and I believe is relevant 12:53:36
19 in the present context. 12:53:46
20 Q. Did you read the Boronson reference? 12:53:51
21 A. I believe that I had a lot of references 12:54:01
22 available to me. And I do not recall off the top of 12:54:07
23 my head if I have reviewed the Boronson reference. 12:54:14
24 Q. Paragraph 59 is what you use as the source 12:54:26
25 for the portion of your construction that requires a 12:54:30

Pictiva EX2016
Samsung v Pictiva
IPR2024-01095

planarization layer to not reproduce the topography 12:54:41
of the underlying layer, correct? 12:54:44
A. Yes. 12:55:01
Q. And if you could go ahead and turn to page 12:55:02
237 of the file history that we were just reviewing? 12:55:08
A. 237, yes. 12:55:30
Q. And the remarks that you quote were in 12:55:32
connection with the applicant's arguments 12:55:36
distinguishing the Palmans references that's 12:55:41
discussed on this page, correct? 12:55:46
A. Yes. 12:55:52
Q. Did you read the Palmans reference? 12:55:52
A. Same answer as I gave before: I have 12:56:03
received many prior art references. I do not recall 12:56:06
off the top of my head if Palmans was one of them. 12:56:16
I can say that if I reviewed the Palmans 12:56:23
reference, I reviewed it to a limited extent. And 12:56:29
not from A to Z or from front to back. 12:56:39
Q. Were you aware that the metal studs that the 12:56:45
examiner had identified as the planarization layer in 12:56:52
the Palmans reference did not provide a flat surface? 12:56:56
MS. BAILY: Object to form. 12:57:05
THE WITNESS: I would have to -- I would 12:57:13
need to have a look at the metal studs. 12:57:14
///

Pictiva EX2016
Samsung v Pictiva
IPR2024-01095

BY MS. CARSON:

Q. Do you see here in the last paragraph on the 12:57:22
page, the applicant argued, "moreover the metal studs 12:57:28
5 cannot be used as a planarization layer because the 12:57:32
metal studs 5 do not provide a flat surface." 12:57:35
Do you see that? 12:57:39
A. I do. 12:57:47
Q. You didn't include anything in your 12:57:48
declaration disputing or contradicting that statement 12:57:50
by the applicant, correct? 12:57:51
A. Can I hear the question again? 12:58:27
Q. You didn't -- strike that. 12:58:29
You didn't include anything in your 12:58:32
declaration disputing or contradicting that statement 12:58:35
by the applicant that the metal studs of the Palmans 12:58:38
reference did create a flat surface, right? 12:58:45
MS. BAILY: Object to form. 12:59:22
THE WITNESS: My argument is based on the 12:59:22
last sentence in this paragraph. And the last 12:59:28
sentence in this paragraph refers to metal. And 12:59:33
discloses that metals do not cover up imperfections 12:59:45
but reproduce the topography of these defects. 12:59:53
That's what I relied upon. And I see there 13:00:03
are additional statements relating to metal studs. 13:00:06
At the moment, I do not recall what the 13:00:10

Pictiva EX2016
Samsung v Pictiva
IPR2024-01095

1 studs 5 are. So to answer your question, it would be 13:00:17
2 helpful for me to look at the detailed disclosure of 13:00:24
3 the metal studs. 13:00:32
4 MS. CARSON: So, sir, please just listen to 13:00:34
5 my question. I move to strike as nonresponsive. 13:00:36
6 Q. My question wasn't about what you think 13:00:38
7 about the metal studs. Or what analysis you could 13:00:39
8 do. 13:00:41
9 I'm simply asking you to confirm that you 13:00:42
10 did not dispute or address that sentence -- the first 13:00:43
11 sentence of that paragraph, saying that the metal 13:00:47
12 studs do not create a flat surface in your 13:00:50
13 declaration?
14 There's nothing in your declaration about 13:00:53
15 that, correct? 13:00:56
16 MS. BAILY: Object to form. 13:00:58
17 THE WITNESS: I do make statements about 13:01:21
18 metals in general. And metal studs are a particular 13:01:22
19 metal configuration. 13:01:29
20 But I agree that I don't recall using metal 13:01:32
21 studs as a point of discussion in my declaration. 13:01:40
22 BY MS. CARSON: 13:01:47
23 Q. In your declaration, you did not reference, 13:01:57
24 discuss, or mention the fact that the applicants 13:02:01
25 distinguished the Palmans reference by stating (as 13:02:07

Pictiva EX2016
Samsung v Pictiva
IPR2024-01095

read):

The metal studs 5 cannot be used 13:02:10
as a planarization layer because the 13:02:12
metal studs 5 do not provide a flat 13:02:14
surface. 13:02:17

Correct? That sentence is not addressed in 13:02:17
your declaration, correct? 13:02:21
A. I don't see that sentence quoted in my 13:03:02
declaration. 13:03:06
Q. If you could go back to the '389 patent. 13:03:07
And take a look at column 6, line 6 to 16. 13:03:20
Do you see there that's describing figures 13:03:51
4A and 4B? 13:03:53
A. Yes. 13:03:55
Q. And if you look about midway in the 13:04:01
paragraph, this is describing (as read): 13:04:03

An embodiment where the barrier 13:04:06
layer 408 is selectively deposited 13:04:09
in a manner known in the art -- e.g. 13:04:12
through a mask or screen -- situated 13:04:15
on top of the OLED devices. 13:04:22

Pictiva EX2016
Samsung v Pictiva
IPR2024-01095

1 Do you see that? 13:04:24
2 A. I do. 13:04:27
3 Q. And if you look at the figures that this is 13:04:28
4 describing, figures 4A and 4B, do you agree that the 13:04:31
5 shape of 408, the barrier layer, is different in 13:04:43
6 figure 4B than it is in figure 4A? 13:04:47
7 A. The top surface is similar. But the side 13:05:12
8 surfaces are somewhat different. 13:05:15
9 Q. In figure 4B, some of the portion on the 13:05:21
10 side is removed, correct? 13:05:24
11 A. I'm not sure if I understand the question. 13:05:39
12 But 408 has been selectively deposited. 13:05:40
13 And the deposition process is area 13:05:48
14 selective. So we do not find 408 in all areas. But 13:05:54
15 we find 408 only in specific areas. 13:06:02
16 MS. CARSON: Move to strike as 13:06:07
17 nonresponsive. 13:06:07
18 Q. My question was, if you look at figure 4A 13:06:08
19 versus 4B, a portion of 408 that you can see in 4A is 13:06:12
20 removed when we look at 4B, correct? 13:06:19
21 MS. BAILY: Object to form. 13:06:38
22 THE WITNESS: Can I hear the question again, 13:07:13
23 please? 13:07:15
24 BY MS. CARSON: 13:07:16
25 Q. If you compare figure 4A with 4B, 4B 13:07:16

Pictiva EX2016
Samsung v Pictiva
IPR2024-01095

reflects that a portion on the side of the items 13:07:25
labeled 408 has been removed or changed, correct? 13:07:33
MS. BAILY: Object to form. 13:07:40
THE WITNESS: My understanding is that layer 13:07:44
406 of has been removed at certain points. If you go 13:07:47
back to 406 and you read the last sentence, the last 13:07:52
sentence says, "figure 4B shows the next step in the 13:07:59
processing after that portion of the unwanted organic 13:08:07
layer 406 is removed by methods known in the art." 13:08:15
This was the last sentence. And it 13:08:21
indicates that layer 406 has been removed. 13:08:24
BY MS. CARSON: 13:08:31
Q. And in the process of removing layer 406, 13:08:31
the shape of 408 changed, correct? 13:08:35
MS. BAILY: Object to form. 13:09:13
THE WITNESS: If we just go by what the 13:09:14
figures disclose, I would agree. But if we go by 13:09:16
what has been described in column 6, we remove layer 13:09:19
406 and the removal of that layer should not affect 13:09:31
feature 408 in a major fashion. 13:09:44
MS. CARSON: Move to strike everything from 13:09:54
"but" onward. 13:09:55
Q. I'd like -- 13:09:58
MS. BAILY: We obviously oppose that motion. 13:10:01
Can I have a standing -- I don't know, Rebecca, can I 13:10:04

Pictiva EX2016
Samsung v Pictiva
IPR2024-01095

1 have a standing -- 13:10:07
2 MS. CARSON: Sure. I've never heard of 13:10:09
3 somebody doing that on the record. But that's fine. 13:10:10
4 Okay, I want to take a break now. But I 13:10:13
5 just want to note for the record, sir, I really 13:10:16
6 appreciate that you're trying to be careful. 13:10:19
7 But we've had like a lot of lengthy delays 13:10:21
8 after my questions, a lot of nonresponsive answers. 13:10:27
9 And I just want to make a formal request to counsel 13:10:29
10 to speak to the witness and to try to encourage him 13:10:32
11 on the break to be a little bit more responsive to my 13:10:35
12 questions. 13:10:38
13 Otherwise, I do think we're probably going 13:10:38
14 to have to move to seek additional time with the 13:10:41
15 witness through the court because I feel like my 13:10:43
16 questions are being obstructed. 13:10:46
17 And the witness is not responding. And I 13:10:48
18 hope it's not intentional. But it's just -- there's 13:10:51
19 been a lot of delays just after I've asked questions. 13:10:54
20 And in terms of just providing a lot of 13:10:57
21 information that I'm not seeking through the 13:11:01
22 questions. 13:11:03
23 MS. BAILY: Okay, I'm not sure I -- yeah, I 13:11:05
24 disagree with the characterization. There's 13:11:08
25 definitely no intent to delay. I will talk to the 13:11:13

Pictiva EX2016
Samsung v Pictiva
IPR2024-01095

1 witness at the break. 13:11:13
2 Obviously, I don't think anything has 13:11:15
3 happened that justifies more time at all. But we'll 13:11:16
4 see what we can do. 13:11:21
5 MS. CARSON: Yeah. We can take that up 13:11:22
6 later. But I just want to flag it. And we 13:11:23
7 definitely will be here for the full seven hours 13:11:25
8 given that we haven't gotten through very much 13:11:27
9 material yet. 13:11:31
10 So let's take our break. 13:11:32
11
12 VIDEOGRAPHER: Going off the record. The 13:11:34
13 time is 3:11 p.m. 13:11:35
14
15 (Recess taken.)
16 13:23:37
17 VIDEO OPERATOR: Back on the record. The 13:23:37
18 time 3:23 p.m. 13:23:39
19 13:23:42
20 BY MS. CARSON:
21 Q. I want to turn to the '164 patent. For that 13:23:43
22 patent, you propose different constructions for 13:23:47
23 matrix and matrix material, correct? 13:23:52
24 A. Yes. 13:23:57
25 Q. So you'd agree that a matrix material and a 13:23:59

Pictiva EX2016
Samsung v Pictiva
IPR2024-01095

matrix are two distinct things, correct? 13:24:03
A. Correct. 13:24:08
MS. CARSON: In case you need to reference 13:24:15
it, I've introduced as Exhibit 8 a copy of the '164 13:24:16
patent. 13:24:24
(Exhibit 8 was marked for identification by
the court reporter and is attached hereto.)
BY MS. CARSON:
Q. But can you confirm for me that none of the 13:24:25
claims of the '164 patent recite a matrix as opposed 13:24:30
to a matrix material? 13:24:38
A. Yes. I can confirm that the claims use the 13:24:58
word matrix in conjunction with matrix material. 13:25:04
Q. So there's no separate limitation in the 13:25:10
claims for just a matrix, correct? 13:25:15
A. Matrix is not used in isolation in the 13:25:42
claims. 13:25:46
Q. So in other words, in claim one, the claim 13:25:46
required a first matrix material, a second matrix 13:25:49
material and a third matrix material. But it doesn't 13:25:56
actually recite or require a matrix, correct? 13:26:01
A. Yes. Based on my understanding and based on 13:26:22
the claim construction of matrix, the mixture of the 13:26:23
first, second, and third matrix material is the 13:26:27
matrix. 13:26:37

Pictiva EX2016
Samsung v Pictiva
IPR2024-01095

Q. But the claim doesn't recite an element that 13:26:39
says "a matrix," correct? 13:26:47
MS. BAILY: Object to the form. 13:26:52
THE WITNESS: Correct. Matrix is not used 13:26:53
in isolation. But matrix is used in conjunction with 13:26:55
material. So matrix material. 13:26:59
BY MS. CARSON: 13:27:07
Q. Claim one of the '164 patent recites at 13:27:07
least one organic functional layer, correct? 13:27:18
A. Correct. 13:27:23
Q. And you'd agree that the element of at least 13:27:23
one organic functional layer could include a device 13:27:27
that comprises multiple organic functional layers? 13:27:31
A. Yes. 13:27:45
Q. Do the claims of the '164 patent recite or 13:27:46
specify the number of matrices included in the at 13:27:54
least one organic functional layer? 13:28:01
MS. BAILY: Object to form. 13:28:07
THE WITNESS: Can I hear the question again? 13:28:16
BY MS. CARSON: 13:28:19
Q. Do the claims of the '164 patent specify the 13:28:19
number of matrices included in the at least one 13:28:23
organic functional layer? 13:28:28
MS. BAILY: Object to form. 13:28:32
THE WITNESS: And for the term matrix, 13:28:45

Pictiva EX2016
Samsung v Pictiva
IPR2024-01095

you're assuming the construction that I proposed? 13:28:47
BY MS. CARSON: 13:29:02
Q. I'm not assuming any construction. I'm just 13:29:02
asking whether the claim specifies how many matrices 13:29:05
are included in the at least one organic functional 13:29:15
layer? 13:29:18
A. In one organic functional layer, there is 13:29:26
based on my understanding one matrix. 13:29:29
Q. Where is that in the claim? Does the claim 13:29:34
recite that? 13:29:36
MS. BAILY: Object to form. 13:29:42
THE WITNESS: In isolation? 13:29:42
BY MS. CARSON: 13:29:48
Q. I'm just saying, does the claim -- does 13:29:48
claim one specify how many matrices there are? 13:29:50
A. I go by the identification of the matrix as 13:30:06
disclosed in the specification. And the 13:30:20
specification essentially says that one matrix or the 13:30:28
matrix is composed of three matrix materials. 13:30:35
Q. Sure. So I understand the specifications. 13:30:42
But I'm asking about the claim. The claim doesn't 13:30:44
recite a matrix, correct? 13:30:49
A. It's not recited in isolation, correct. 13:30:52
Q. And the claim doesn't specify the number of 13:30:56
matrices that can be included in the at least one 13:31:02

Pictiva EX2016
Samsung v Pictiva
IPR2024-01095

organic functional layer, correct? 13:31:05

A. I would say it this way: That the organic 13:31:13

function layer that is recited in claim one is 13:31:15

identified as a emission layer in claim one. 13:31:18

So if we have one emission layer and the 13:31:23

emission layer is composed of the three matrix 13:31:29

materials, then we have one matrix. And that matrix 13:31:32

is composed of the three matrix materials. 13:31:35

If we have more than one organic function 13:31:43

layer, then we have multiple emission layers. 13:31:45

Q. And the patent describes embodiment in the 13:32:02

specification where each layer can have a matrix, 13:32:05

correct? 13:32:08

MS. BAILY: Object to form. 13:32:20

THE WITNESS: My recollection is that the 13:32:20

'164 patent defines a matrix as something that is 13:32:22

composed of three matrix materials. So for the 13:32:33

matrix to exist, we need the three different matrix 13:32:37

materials. 13:32:48

MS. CARSON: Move to strike as 13:32:49

nonresponsive. That wasn't my question. 13:32:50

Q. My question was, the patent describes 13:32:52

embodiments where each layer can have a matrix, 13:32:54

correct? 13:33:14

MS. BAILY: Object to form. 13:33:14

Pictiva EX2016
Samsung v Pictiva
IPR2024-01095

1 THE WITNESS: Each layer -- which layer are 13:33:19
2 you referring to? Are you referring to the hole 13:33:22
3 transport layer, the electron transport layer, and 13:33:25
4 the first matrix material? 13:33:33
5 BY MS. CARSON: 13:33:38
6 Q. I'm referring to the organic functional 13:33:38
7 layers that are discussed. And you agree with me 13:33:40
8 that the patent contemplates that there can be 13:33:43
9 multiple organic functional layers, right? 13:33:47
10 A. There can be multiple emission layers. The 13:33:49
11 organic function layer is identified as an emission 13:33:52
12 layer. And there can be multiple emission layers. 13:34:00
13 But this is a bit rare. But it is within 13:34:03
14 the scope of the claim that we have multiple emission 13:34:07
15 layers. 13:34:11
16 But usually there's only one emission layer 13:34:11
17 in OLED, O-L-E-D, organic light emitting diode. 13:34:14
18 Q. And the patent says that in addition, there 13:34:25
19 can be other functional organic layers, such as a 13:34:32
20 hole induction layer, a hole transport layer, and an 13:34:34
21 intermediate layer, and an electron transport layer, 13:34:37
22 and electron injection layer in addition to the 13:34:45
23 emission layer, correct? 13:34:48
24 A. In claim one, I don't see that possibility 13:34:58
25 because the organic functional layer is identified as 13:35:00

Pictiva EX2016
Samsung v Pictiva
IPR2024-01095

emission layer. 13:35:05
The last limitation -- the last limitation 13:35:09
identifies the organic functional layer as an 13:35:17
emission layer. 13:35:23
MS. CARSON: Try to focus on my question. 13:35:26
And move to strike as nonresponsive. 13:35:27
Q. I'm not asking about the claim. I'm asking 13:35:30
about the embodiments in the specification. 13:35:32
Could you turn your attention to column 4? 13:35:35
A. Yes. 13:35:49
Q. In column 4, lines 16 to 28, the patent 13:35:49
discusses an embodiment where there are multiple 13:35:57
organic functional layers and each of these layers 13:36:02
has a matrix, correct? 13:36:06
A. Can I have the question again. 13:37:14
Q. In column 4, lines 16 to 28, the patent 13:37:15
discusses an embodiment where there are multiple 13:37:21
organic functional layers. And each of these layers 13:37:24
has a matrix, correct? 13:37:27
A. Yes. 13:38:04
Q. Could you turn your attention to column 5, 13:38:05
lines 3 to 17? 13:38:18
Column 5, lines 3 to 17, describe an 13:38:25
embodiment where the recombination zone can be 13:38:39
distributed within one functional layer or over 13:38:43

Pictiva EX2016
Samsung v Pictiva
IPR2024-01095

several layers, correct? 13:38:47
A. I have read the paragraph you indicated. 13:39:48
And I would like to hear your question again. 13:39:51
Q. Column 5, lines 3 to 17, describes 13:39:57
embodiments where the recombination zone can be 13:40:02
distributed within one functional layer or over 13:40:07
several layers, correct? 13:40:10
MS. BAILY: Object to form. 13:40:25
THE WITNESS: Your question has two aspects. 13:40:41
And maybe we can look at these two aspect separately. 13:40:43
So what I see here in the paragraph is that 13:40:49
the recombination zone can be shifted within the 13:40:52
light-emitting layer. 13:41:08
For example, from the borders of the 13:41:09
light-emitting layer to the middle. That I can 13:41:11
verify. And I agree with you that it is disclosed in 13:41:16
this paragraph. 13:41:20
BY MS. CARSON: 13:41:21
Q. Do you see the second sentence, sir? Can 13:41:21
you read that for me? 13:41:24
A. "The recombination zone can thereby be 13:41:30
distributed within one layer or over several layers." 13:41:33
Q. Okay. So the patent describes that 13:41:41
embodiment -- strike that. 13:41:45
The patent describes embodiments where the 13:41:50

Pictiva EX2016
Samsung v Pictiva
IPR2024-01095

recombination zone can be distributed within one 13:41:53
layer or over several layers, correct? That's what 13:41:56
you just read? 13:42:11
A. Yes. 13:42:12
Q. It's your position that a matrix is a 13:42:18
continuous phase of the mixture of matrix material. 13:42:20
What do you mean by "continuous phase." 13:42:28
A. Continuous phase means that there are no 13:42:38
regions in which we have voids? Or in which we have 13:42:42
phase separation. 13:42:55
And continuous phase in my view also 13:42:55
includes the fact that we have the three matrix 13:42:59
materials present throughout -- continuously 13:43:08
throughout the matrix. 13:43:17
Q. Outside the context of the '164 patent, can 13:43:23
you have a matrix that only includes one material? 13:43:27
A. Completely outside the context of the '164 13:43:41
patent, I would assume that matrix material can have 13:43:44
different meanings and there can be materials in 13:43:48
which there is only one matrix material. 13:43:54
Q. And outside the context of the '164 patent, 13:44:00
a person of skill would understand that you could 13:44:04
also have a matrix that includes two materials, 13:44:05
correct? 13:44:10
A. I'm not sure if I understand the question. 13:44:21

Pictiva EX2016
Samsung v Pictiva
IPR2024-01095

But one can have a mixture of two materials. I agree 13:44:22
with that. 13:44:28
MS. CARSON: If you could take a look at 13:44:59
Exhibit 9. 13:45:00
(Exhibit 9 was marked for identification by
the court reporter and is attached hereto.)
BY MS. CARSON:
Q. Have you seen Exhibit 9 before? 13:45:17
A. I think I saw an image of it. 13:45:37
Q. Do you see on page two -- did you review 13:45:46
this in connection with your declaration or somewhere 13:45:49
else? 13:46:04
A. Certainly not in its entirety. I have seen 13:46:05
the figure of the title page before. And saw 13:46:08
discussions on that page, on that figure. 13:46:15
Q. Based on your opinions regarding the 13:46:20
constructions of matrix and matrix materials would 3C 13:46:27
and 3B in this diagram be considered matrix materials 13:46:38
or only 3A? 13:46:43
MS. BAILY: Object to form. 13:46:55
THE WITNESS: Initially, I would be open. 13:47:12
And not foreclose the possibility that 3B or 3C can 13:47:14
be referred to as a matrix material. 13:47:26
BY MS. CARSON: 13:47:33
Q. What additional information would you need 13:47:33

Pictiva EX2016
Samsung v Pictiva
IPR2024-01095

to have in order to make that determination? 13:47:35
A. The '164 patent gives a number of examples 13:47:54
of matrix materials. And these examples are given 13:48:06
just before the claims section. 13:48:26
And the collection of materials enclosed in 13:48:30
the '164 patent includes a charge-transporting 13:48:43
material. This figure, the figure of Sugiura, 13:48:53
S-U-G-I-U-R-A, includes a region labeled as region 3B 13:49:07
that is a charge-transporting material. 13:49:20
And I wouldn't want to exclude that this 13:49:26
material, 3B, can be referred to as a matrix 13:49:32
material. 13:49:38
Q. Does the figure show a continuous phase of 13:49:42
the mixture of 3A, 3B, and 3C? 13:49:48
MS. BAILY: Object to the form. 13:49:53
THE WITNESS: If these little circles 13:50:20
contain only one matrix material, then I would say 13:50:22
that this is not a matrix because it does not include 13:50:24
a continuous phase of matrix materials. But rather 13:50:29
agglomerations of materials as expressed by the 13:50:48
circle features or circular features. 13:50:54
BY MS. CARSON: 13:51:01
Q. Can a dopant be a matrix material? 13:51:01
MS. BAILY: Object to form. 13:51:07
THE WITNESS: A matrix material may be 13:51:28

Pictiva EX2016
Samsung v Pictiva
IPR2024-01095

1 referred to as a dopant if a material or if a matrix 13:51:30
2 includes multiple matrix materials. 13:51:36
3 One of the matrix materials may be referred 13:51:48
4 to as a dopant. For example, a patent may include -- 13:51:50
5 may disclose, a matrix containing two materials. One 13:51:58
6 material is present in greater quantity. Another 13:52:05
7 material is present in a smaller quantity. 13:52:08
8 The material in a smaller quantity may be 13:52:13
9 referred to as a second matrix material or may be 13:52:15
10 referred to as a dopant. 13:52:24
11 It is pretty much up to the choice of words 13:52:26
12 made by the inventor. 13:52:35
13 BY MS. CARSON:
14 Q. If the dopant only forms islands in a 13:52:42
15 matrix, would that be considered a matrix material? 13:52:46
16 MS. BAILY: Object to form. 13:53:09
17 THE WITNESS: The way I have interpreted 13:53:26
18 matrix is that a matrix is a continuous phase of a 13:53:31
19 mixture of matrix material. 13:53:36
20 So if we have a mixture of materials, it can 13:53:42
21 be a matrix. But if we do not have a mixture, then I 13:53:44
22 would not call it a matrix because it is not a 13:53:52
23 mixture of matrix materials. 13:53:56
24 BY MS. CARSON: 13:54:04
25 Q. So is it fair to say that -- strike that. 13:54:04

Pictiva EX2016
Samsung v Pictiva
IPR2024-01095

1 You opined that the term "charge carrier 13:54:42
2 mobility" is indefinite in the '164 patent, correct? 13:54:45
3 A. Correct. 13:55:01
4 Q. Is it your position that a person of skill 13:55:01
5 in the art would not know what charge carrier 13:55:03
6 mobility is? 13:55:10
7 A. Outside the context of the '164 patent, 13:55:16
8 charge carrier mobility has a meaning. But the way 13:55:20
9 it is used in the claim and the way it is used in the 13:55:23
10 specification is problematic. And I can be more 13:55:30
11 specific if you wish. 13:55:35
12 Q. Outside the context of the '164 patent, what 13:55:47
13 would a person of skill understand the term charge 13:55:50
14 carrier mobility to refer to? 13:55:56
15 A. Charge carrier mobility relates the velocity 13:56:02
16 of a charge carrier to the electric field that the 13:56:07
17 charge carrier is subjected to. 13:56:19
18 If we have a certain electric field in the 13:56:25
19 high mobility, we obtain a high carrier velocity. If 13:56:28
20 we have a certain electric field and have a low 13:56:33
21 mobility, we obtain a small carrier velocity. 13:56:36
22 Q. And in paragraph 138 of your declaration, 13:57:02
23 you opine that the principal reason for why charge 13:57:07
24 carrier mobility is allegedly indefinite in the 13:57:14
25 context of the '164 patent is because it's highly 13:57:19

Pictiva EX2016
Samsung v Pictiva
IPR2024-01095

dependent on surrounding environment and is not an 13:57:25
intrinsic property of a material; is that right? 13:57:29
A. That is one of the reasons, yes. It is not 13:57:38
an intrinsic property of the material. It is not an 13:57:40
inherent property of the material. But depends on 13:57:44
various factors. 13:57:48
Q. So is it your position that it's not 13:57:52
possible to compare two materials and determine which 13:57:55
one has a higher charge carrier mobility? 13:58:01
MS. BAILY: Object to form. 13:58:25
THE WITNESS: There are two points to my 13:58:26
answer. 13:58:29
And one relates to the claim language. And 13:58:30
to make my answer as short as possible, if we look at 13:58:39
claim number 4, claim number 4 mentions a charge 13:58:46
carrier mobility of the first matrix material. 13:58:57
The first matrix material is usually the 13:59:03
light-emitting material and is specified as 13:59:10
light-emitting material in claim number one. 13:59:13
And in this material, we have electrons and 13:59:20
holes. So we would have a electron or hole mobility. 13:59:24
Now which one are we comparing to the other 13:59:27
mobilities? That is an ambiguity that would make it 13:59:30
difficult or impossible for a POSA to compare the 13:59:41
mobilities that are specified in claim number 4 13:59:50

Pictiva EX2016
Samsung v Pictiva
IPR2024-01095

because there are for the light-emitting layer two 13:59:57
mobilities. 14:00:03
This was the first aspect. There's a second 14:00:06
aspect. 14:00:11
And if you go to the specification, there's 14:00:13
an equation. And the equation is described as that 14:00:17
the mobility can be determined by the equation. 14:00:27
There are two problems with the equation. 14:00:35
The first problem is a POSA could not apply -- could 14:00:37
not use the equation to determine the mobilities that 14:00:45
are specified in the claims. 14:00:50
The second problem is the equation does not 14:00:55
give mobility. But instead it gives a frequency. So 14:00:59
the equation that allegedly allows a POSA to 14:01:06
determine the mobility doesn't give the mobility. It 14:01:10
gives a frequency. And that's the second problem. 14:01:13
BY MS. CARSON: 14:01:17
Q. Is it your position that there weren't any 14:01:17
well-known techniques at the time of the '164 14:01:19
invention for measuring charge carrier mobility? 14:01:27
A. Yes and no. If we take a hole transport 14:01:48
layer, HTL, in isolation, we can measure the 14:01:52
mobility. If we take the electron transport layer, 14:02:01
ETL, in isolation, we can measure the mobility. 14:02:08
However, claim 4 requires that we compare 14:02:16

Pictiva EX2016
Samsung v Pictiva
IPR2024-01095

that to the mobility of the first matrix material, 14:02:19
the light-emitting layer. 14:02:29
And in the light-emitting layer, we do not 14:02:30
have single carrier transport. We have electrons and 14:02:34
holes that recombine.
And neither the specification nor the claims 14:02:46
make clear which mobility of the light-emitting layer 14:02:48
are we supposed to compare. 14:03:01
So in other words, there is no established 14:03:05
measurement technique for measuring simultaneously 14:03:08
the electron mobility and the hole mobility within 14:03:15
matrix -- within the light-emitting matrix that is 14:03:25
disclosed as the light-emitting layer. 14:03:38
To make that point more clear, I wish to 14:03:39
refer to figure 4, which is the simulation -- figure 14:03:45
4 of the '164 patent, which is a simulation. 14:03:52
And there we have feature number 30, 3-0, 14:03:59
which is the emission layer. And in this emission 14:04:09
layers we have electrons and holes. 14:04:14
There is no technique that would allow us to 14:04:17
measure electron and hole mobility in this emission 14:04:19
layer. 14:04:28
Q. In paragraphs 139 to 142 of your report, you 14:04:47
identify some things that you say could change the 14:04:55
charge carrier mobility; is that right? 14:05:02

Pictiva EX2016
Samsung v Pictiva
IPR2024-01095

Environmental factors, the presence of a dopant? 14:05:04
A. Correct. 14:05:15
Q. Did you do any testing or studies to support 14:05:15
your opinion that the things you mentioned in these 14:05:18
paragraphs would cause charge carrier mobility to 14:05:21
change significantly? 14:05:24
MS. BAILY: Object to form. 14:05:31
THE WITNESS: I have based these statements 14:05:43
on my experience and knowledge in the field. But I 14:05:44
have not conducted experimental tests. 14:05:46
BY MS. CARSON: 14:05:49
Q. And did you cite any publications or 14:05:50
third-party testing or studies to support your 14:05:55
opinions in this paragraph? 14:06:02
A. I referred to the '164 patent itself. If 14:06:23
you look at the quotes found at the end of paragraph 14:06:26
139, the '164 patent states that (as read): 14:06:39

The mobility of electrons and 14:06:44
holes can depend on the molecule 14:06:49
distance and which in turn depends 14:06:53
on the relative concentrations of 14:07:03
the materials. And these relative 14:07:06
concentrations play a role. 14:07:11

Pictiva EX2016
Samsung v Pictiva
IPR2024-01095

1 So based on that statement, the distance can 14:07:19
2 vary, the distance between the charge transporting 14:07:23
3 molecules can vary. 14:07:27
4 And the gap between these molecules has a 14:07:28
5 great influence on the mobility. And the inventors 14:07:37
6 expressed this fact by the equation that is disclosed 14:07:43
7 in the '164 patent. 14:07:55
8 So my support was, in part, also the '164 14:07:56
9 patent. 14:08:02
10 MS. CARSON: So move to strike as 14:08:05
11 nonresponsive. 14:08:07
12 Q. Did you cite any publications or third-party 14:08:07
13 testings or studies to support your opinions in 14:08:10
14 paragraphs 139 to 142? 14:08:14
15 And by third-party publications or studies, 14:08:26
16 that would exclude the patent itself. 14:08:31
17 Are you able to answer the question? 14:09:05
18 A. Yes. I'm able to answer the question. I 14:09:07
19 don't see any, as you put it, third-party 14:09:10
20 publications. I'm happy to name a third-party 14:09:14
21 publication if you wish. 14:09:23
22 But I have not cited one here in these 14:09:25
23 paragraphs that you asked me that look at. 14:09:27
24 Q. Did you ask Samsung whether they perform any 14:09:33
25 testing of their own products to determine charge 14:09:40

Pictiva EX2016
Samsung v Pictiva
IPR2024-01095

carrier mobility for the materials that they use in 14:09:46
the accused devices? 14:09:51
A. I have not asked questions of the Samsung 14:10:00
company. 14:10:08
Q. Did you ask to review any documents from 14:10:11
Samsung regarding the testing of their products to 14:10:22
determine the charge carrier mobility for the 14:10:29
materials used in those products? 14:10:33
A. For purposes of claim construction, I have 14:10:41
not done this because I believe that the patent 14:10:46
itself and the trial history are relevant for claim 14:10:56
construction and not so much what people in the field 14:11:08
may do. 14:11:12
Q. So the answer is, no, you did not review any 14:11:12
documents from Samsung regarding whether they're able 14:11:17
to measure the charge carrier mobility for the 14:11:21
materials that are used in the accused products? 14:11:25
A. I don't think I am in possession of such 14:11:36
documents. 14:11:39
Q. Did you ask whether any such documents 14:11:39
exist? 14:11:41
A. I have not inquired in this regard. 14:12:01
Q. You have also opined that claim 13, which 14:12:03
recites a method for the production of an electronic 14:12:06
device according to claim 1, is indefinite, correct? 14:12:09

Pictiva EX2016
Samsung v Pictiva
IPR2024-01095

A. Yes. 14:12:29
Q. Do you agree that claim 13 recites a method 14:12:30
for producing an electronic device? 14:12:33
A. Not entirely. It is my understanding that 14:12:43
claim one is incorporated into claim 13. And claim 14:12:45
one does not disclose a method. 14:12:51
Q. I'm asking about claim 13 though. So claim 14:12:55
13 states a method for the production of an 14:12:59
electronic device, according to claim one. 14:13:05
So do you agree with me that the claim 14:13:08
states on its face that it's a method for producing 14:13:11
an electronic device? 14:13:14
A. Well, as I said before, based on my 14:13:20
understanding, claim one is incorporated in claim 13. 14:13:22
And claim one is not a method claim. 14:13:27
Therefore, claim 13 because it incorporates 14:13:32
claim one, is not limited to a method claim. 14:13:36
Q. Do you understand that in patent law there's 14:13:52
a difference between a method for producing or 14:13:54
manufacturing a device and a method for using a 14:13:56
device? 14:14:01
MS. BAILY: Object to form. 14:14:11
THE WITNESS: I have only limited 14:14:11
familiarity with patent law. 14:14:12
///

Pictiva EX2016
Samsung v Pictiva
IPR2024-01095

BY MS. CARSON: 14:14:15
Q. Does claim 13 recite a method for using a 14:14:15
device? Or a method for producing a device? 14:14:19
MS. BAILY: Object to form. 14:14:26
THE WITNESS: My understanding is that claim 14:14:34
13 incorporates claim 1. Claim 1 is an apparatus 14:14:36
claim. And claim 13 appears to be a mixed claim. 14:14:45
BY MS. CARSON: 14:15:00
Q. What's your understanding of what a mixed 14:15:00
claim is? 14:15:03
A. I'm just saying that claim 13 includes 14:15:10
method steps and also apparatus features. So is 14:15:17
includes both. And that's what I refer to. 14:15:28
Q. Do you dispute that a person of skill in the 14:15:33
art would be able to produce the device described in 14:15:50
claim 1 using the steps recited in claim 13? 14:15:54
A. In my view, a person of skill would be 14:16:19
confused by claim 13 because it has -- it discloses a 14:16:30
method but also discloses an apparatus for -- in 14:16:42
claim 1, it's called a device. 14:16:50
So claim 1 is a device claim or apparatus 14:16:53
claim. Claim 13 discloses both: A method and then 14:17:01
by means of incorporating claim number 1, it also 14:17:12
includes a device or an apparatus. 14:17:16
Q. And when you say claim 13 discloses a 14:17:22

Pictiva EX2016
Samsung v Pictiva
IPR2024-01095

1 method, it's a method for producing a device, 14:17:45
2 correct? 14:17:46
3 A. If I read claim 13, there is a method. But 14:17:48
4 it's not limited to a method because claim 1 is 14:18:16
5 incorporated. 14:18:21
6 Q. And it's the method for producing the 14:18:23
7 device, correct? 14:18:26
8 MS. BAILY: Object to form. 14:18:33
9 MS. CARSON: Strike that. Let me clarify. 14:18:34
10 The method part of claim 13 is a method for 14:18:37
11 producing the device -- not for using the device, 14:18:40
12 correct. 14:18:44
13 MS. BAILY: Object to form. 14:18:48
14 THE WITNESS: If we just go by the first 14:19:06
15 line of claim number 13, it discloses a method for 14:19:07
16 the production of an electronic device. 14:19:11
17 But if you look at claim 13 in its entirety, 14:19:16
18 including the incorporation of claim 1, we have 14:19:20
19 method, steps and device features. And it is unclear 14:19:27
20 to me how they are incorporated in one claim. 14:19:37
21 MS. CARSON: All right. I'm going to move 14:19:50
22 on to another patent. But let's maybe take a quick 14:19:51
23 break because I need to get something to drink. 14:19:54
24 VIDEO OPERATOR: Counsel, do you agree to go 14:19:57
25 off the record? 14:19:58

Pictiva EX2016
Samsung v Pictiva
IPR2024-01095

MS. BAILY: I just want to note for the 14:20:01
record before we go off that my audio dropped from 14:20:09
around 1:08 to 1:11 p.m. Pacific Time. 14:20:12
So I had no audio at that time and then I 14:20:16
reconnected. I'm sure it's fine. I'm just noting 14:20:19
for the record. And I haven't gone back to look at 14:20:24
the transcript during that time either. 14:20:25
But we can go off the record and take break. 14:20:27

VIDEO OPERATOR: Going off the record. The 14:20:30
time is 4:20 p.m. 14:20:30

(Recess taken.)
14:32:39
VIDEO OPERATOR: Back on the record. The 14:32:39
time is 4:33 p.m. 14:33:36
14:33:39
BY MS. CARSON:
Q. I want to turn to the '425 patent. And just 14:33:40
before we get into the terms, are you aware that 14:33:49
Pictiva has recently moved to amend to add a patent 14:33:53
related to the '425 that recently issued, the '250 14:33:59
patent? 14:34:04
A. I have heard of that. But I have not seen 14:34:10
the patent. 14:34:14

Pictiva EX2016
Samsung v Pictiva
IPR2024-01095

Q. So you have not reviewed the '250 patent? 14:34:14
A. Correct. 14:34:17
Q. And in connection with forming your opinions 14:34:21
for the claim construction terms for the '425 patent, 14:34:23
did you review any of the other patents in the patent 14:34:29
family? 14:34:34
A. I recall only the '425. 14:34:41
Q. So the first term you opined on for the '425 14:34:52
is the (as read): 14:34:56

Organic layer sequence comprises 14:34:57
at least one radiation-emitting 14:34:59
region configured to generate 14:35:03
electromagnetic radiation in a 14:35:05
spectral range from infrared 14:35:09
radiation to UV radiation during 14:35:11
operation. 14:35:15

Is that right? 14:35:16
A. Correct. 14:35:27
Q. And essentially the portion of that term 14:35:32
that you construed is, "in a spectral range from 14:35:39
infrared radiation to UV radiation during operation," 14:35:43
correct? 14:35:48
A. Yes. 14:36:04

Pictiva EX2016
Samsung v Pictiva
IPR2024-01095

Q. And you have construed that to mean in a 14:36:05
spectral range that includes the full spectrum from 14:36:08
infrared radiation to UV operation during operation? 14:36:12
A. Yes. 14:36:36
Q. What is a spectral range? 14:36:37
MS. BAILY: Object to form. 14:36:46
THE WITNESS: A spectral range is a range of 14:37:02
wavelengths starting at one particular wave length 14:37:04
and ending at another particular wavelength. 14:37:08
BY MS. CARSON: 14:37:15
Q. When you say that includes the full spectrum 14:37:16
from infrared radiation to UV radiation, what range 14:37:22
is that referring to? 14:37:37
A. It ranges from the infrared. And the 14:37:50
infrared is about 750 nanometer. That's where the 14:37:55
IR, infrared or IR, range starts. 14:38:04
And it reaches to the UV range. And the UV 14:38:12
range starts at about 400 nanometer. 14:38:25
And the spectral range therefore includes 14:38:33
the visible spectrum. And the visible spectrum is in 14:38:42
the middle between the IR, infrared, and UV, 14:38:47
ultraviolet, spectrum. 14:38:59
Q. Okay, are you -- strike that. 14:39:04
So is it your position that when you say the 14:39:11
full spectrum, does that refer to 400 nanometers to 14:39:14

Pictiva EX2016
Samsung v Pictiva
IPR2024-01095

750 nanometers? 14:39:26

A. At least. Correct. It could reach into the 14:39:30

UV, it could reach into the IR. But given the claim 14:39:32

language, "from infrared to UV means" that the 14:39:41

spectral range at least encompasses the visible 14:39:49

spectral range. 14:39:57

Q. So would a sequence that generates 14:40:08

electromagnetic radiation in a spectral range from 14:40:11

400 nanometers to 750 nanometers satisfy your 14:40:17

construction? 14:40:25

MS. BAILY: Object to the form. 14:40:44

THE WITNESS: Yes. 14:40:45

BY MS. CARSON: 14:40:46

Q. And would a organic layer sequence -- strike 14:40:50

that. 14:41:02

Would an organic layer sequence comprising 14:41:08

at least one radiation emitting region configured to 14:41:14

generate electromagnetic radiation in a spectral 14:41:19

range from say 250 to 460 nanometers also satisfy 14:41:23

your construction? 14:41:34

MS. BAILY: Object to form. 14:41:48

THE WITNESS: The spectral range that you 14:41:50

mentioned does not reach to the IR, infrared, end of 14:41:52

the spectrum. So the spectral range that you 14:41:57

proposed is not a spectral range from the IR to the 14:42:02

Pictiva EX2016
Samsung v Pictiva
IPR2024-01095

UV. 14:42:11
BY MS. CARSON: 14:42:12
Q. I think I misspoke, sorry. Let me try 14:42:13
again. 14:42:15
I guess what I'm trying to get at is that -- 14:42:16
so would any range that starts below 400 nanometers 14:42:19
and goes to above 750 nanometers satisfy your 14:42:35
construction? 14:42:41
MS. BAILY: Object to form. 14:42:44
THE WITNESS: Can I hear the question again? 14:42:55
BY MS. CARSON: 14:42:57
Q. Would any region that starts below 400 14:42:57
nanometers and goes to above 350 (sic) nanometers, 14:43:01
satisfy your construction? 14:43:07
MS. BAILY: Object to form. 14:43:15
THE WITNESS: I heard you said 350. Did you 14:43:16
mean 750? 14:43:18
BY MS. CARSON: 14:43:23
Q. So let's start over. Where does UV 14:43:23
radiation start? 14:43:26
A. At about 400 nanometer. 14:43:28
Q. And where does infrared start? 14:43:35
A. At about 750 nanometer. 14:43:37
Q. So would any spectral range that starts 14:43:39
below 400 and goes to above 750 satisfy your 14:43:43

Pictiva EX2016
Samsung v Pictiva
IPR2024-01095

construction? 14:43:55
MS. BAILY: Object to form. 14:43:57
THE WITNESS: If the radiation emitting 14:44:11
region emits from the two wavelengths you mentioned 14:44:14
or between the two wavelengths you mentioned, then, 14:44:17
yes, it would satisfy the proposed construction. 14:44:22
BY MS. CARSON: 14:44:40
Q. So in your construction when you refer to 14:44:40
full spectrum, you're not referring to the full 14:44:44
spectrum of infrared radiation, right? 14:44:51
A. Infrared radiation does not need to be 14:45:02
included. But it needs to reach to the infrared 14:45:04
radiation. 14:45:10
Q. So you're not saying it needs to include the 14:45:13
full spectrum of all UVA radiation and all infrared 14:45:16
radiation. You're just saying it has to go from some 14:45:21
point in UVA or UV to some point in infrared? 14:45:26
A. Yes. At a minimum, it has to reach from the 14:45:38
long-wavelength end of the UV spectrum to the 14:45:41
short-wavelength end of the IR spectrum. 14:45:45
Q. And just to make sure we have a clear 14:45:52
record, when you say long-wavelength end of the UV 14:45:55
spectrum, what are you referring to? 14:45:59
A. I refer to 400 nanometer. 14:46:01
Q. And when you're referring to the 14:46:04

Pictiva EX2016
Samsung v Pictiva
IPR2024-01095

1 short-wavelength end of the IR spectrum, what are you 14:46:06
2 referring to? 14:46:11
3 A. I refer to 750 nanometer. Pictiva refers to 14:46:12
4 a wavelength of 730 nanometers. That wavelength is 14:46:35
5 equally acceptable. 14:46:44
6 Q. So if it went from 400 nanometers -- if it 14:46:52
7 went at least from 400 nanometers to 730 nanometers, 14:46:56
8 that would meet your construction? 14:47:02
9 A. If the emission goes from the 400 nanometer 14:47:06
10 to the 730 nanometers, that would be equally 14:47:11
11 acceptable. That would meet my construction. 14:47:17
12 And I'm just pointing out that the boundary 14:47:19
13 between visible and IR is not a strict quantity. It 14:47:21
14 can vary from 700 to 750 nanometer. So 750 is 14:47:29
15 acceptable, 730 is acceptable. Even 700 would be 14:47:37
16 acceptable. 14:47:41
17 Q. So what part of Pictiva's construction do 14:47:48
18 you disagree with? 14:47:51
19 A. Based on my understanding, Pictiva refers to 14:48:07
20 a spectral range. And it is not clear to me -- it is 14:48:23
21 not clear from the proposed construction, where the 14:48:26
22 radiation emitting region starts to emit. 14:48:46
23 That means at which wavelength, the 14:48:57
24 light-emitting region starts to emit. And at what 14:49:03
25 wavelength the light-emitting region ends to emit. 14:49:05

Pictiva EX2016
Samsung v Pictiva
IPR2024-01095

Q. So is it your position that it's clearer to say a spectral range that includes the full spectrum from infrared radiation to UV radiation without specifying specific points in the spectrum than to say a spectral range from the wavelength in the infrared range, which is between about 730 nanometers to about 300 micrometers to a wavelength in the UV radiation range between about 400 nanometers to about 40 nanometers? 14:49:12 14:49:15 14:49:21 14:49:26 14:49:31 14:49:36 14:49:45 14:49:50 14:49:55

MS. BAILY: Object to form. 14:49:59

THE WITNESS: Well, I can only give you my understanding of Pictiva's construction. And it appears to me that based on Pictiva's construction, any spectral range, for example 400 nanometer to 500 nanometer. Would satisfy the claim limitation. 14:50:14 14:50:15 14:50:20 14:50:24 14:50:31

However, based on my understanding, the radiation-emitting region needs to emit electromagnetic radiation in a spectral range that reaches from IR to UV. So it needs to include the entire visible spectrum. 14:50:36 14:50:44 14:50:48 14:50:55 14:51:04

BY MS. CARSON: 14:51:10

Q. I think I understand. 14:51:10

A. It needs to include the entire visible spectrum at a minimum. It can reach into the UV. It can reach into the IR. But doesn't have to reach. 14:51:14 14:51:17 14:51:23

Pictiva EX2016
Samsung v Pictiva
IPR2024-01095

It just needs to get to the boundary. So in 14:51:26
other words, the entire visible spectrum needs to be 14:51:29
emitted by the radiation-emitting region. 14:51:41
Q. So just by way of example, a blue light 14:52:07
typically covers the spectral range from 380 to 500 14:52:13
nanometers, correct? 14:52:23
A. Approximately, yes. 14:52:24
Q. And so that would not satisfy the 14:52:25
construction, correct? 14:52:27
A. Correct because it does not range from IR to 14:52:32
UV. 14:52:39
Q. And, similarly, a red light, which typically 14:52:42
covers spectral ranges starting at 620 nanometers 14:52:53
wouldn't satisfy the construction, correct? 14:52:58
A. Correct. Only red light without any green 14:53:04
or blue components would reach to the IR. But it 14:53:06
would not reach to the UV. And the claim requires IR 14:53:12
through UV. 14:53:20
Q. But what you're saying is that if it covers 14:53:29
the full spectrum of visible light from 400 to 730 14:53:31
nanometers, that would satisfy your construction? 14:53:39
A. Yes. 14:53:47
Q. Let's turn to the '547 patent. 14:54:53
Okay, so the first term that you address is 14:55:24
an, "organic layer sequence which emits an 14:55:28

Pictiva EX2016
Samsung v Pictiva
IPR2024-01095

electromagnetic radiation having a first wavelength 14:55:32
spectrum during operation." 14:55:37
Is that right? 14:55:48
A. Yes. 14:55:48
Q. And so I want to address the first part of 14:55:49
the construction first. So you've interpreted an 14:56:01
organic layer sequence to mean an active layer and 14:56:06
electrodes; is that right? 14:56:11
A. Yes. 14:56:19
Q. Does the specification use the term active 14:56:22
layer anywhere? 14:56:26
MS. CARSON: The '547 patent is Exhibit 11 14:56:40
in your Exhibit Share folder if you need to look at 14:56:43
it.
(Exhibit 11 was marked for identification by
the court reporter and is attached hereto.)
THE WITNESS: I see it as disclosing active 14:58:04
region. 14:58:07
BY MS. CARSON: 14:58:12
Q. Is there a difference between an active 14:58:12
region and an active layer? 14:58:16
A. Active implies that it is light-emitting. 14:58:29
And the active layer is a layer that emits light. An 14:58:37
active region is a region that emits light. And 14:58:47
active layer and active region are coextensive, 14:58:54

Pictiva EX2016
Samsung v Pictiva
IPR2024-01095

basically the same region. 14:59:06
Q. So you didn't intend active layer to mean 14:59:07
something different from active region? 14:59:10
A. If we look at the figures of the '547 14:59:22
patent, then we see that active region is region 11. 14:59:35
We also see that -- so if we go, for example, to 15:00:02
figure 1A, then 11 is the active region or 15:00:08
light-emitting region. 15:00:21
And 1 is the organic layer sequence. And 1 15:00:28
includes 10. And 10 is an electrode. 15:00:37
Q. So I'm not sure I understood the answer to 15:01:06
that question. Are you intending for active layer to 15:01:12
mean something distinction from how the patent refers 15:01:15
to active region? 15:01:19
A. No. I think they are pretty much the same 15:01:33
thing. It is a layer. It is also a region. And the 15:01:34
active region emits light, the active layer emits 15:01:37
light. Typically the OLEDs have layers. 15:01:43
Q. You agree that an organic layer sequence 15:02:01
could refer to multiple layers, correct? 15:02:06
MS. BAILY: Object to form. 15:02:15
THE WITNESS: Yes. 15:02:18
BY MS. CARSON: 15:02:21
Q. Under your construction, you're converting 15:02:27
the term organic layer sequence to an active layer 15:02:30

Pictiva EX2016
Samsung v Pictiva
IPR2024-01095

and electrodes. 15:02:37
Are you intending to limit the claim to a 15:02:42
single layer? 15:02:46
MS. BAILY: Object to form. 15:02:52
THE WITNESS: No. 15:03:07
BY MS. CARSON: 15:03:07
Q. Okay. 15:03:07
A. I'm just going by the terminology used in 15:03:24
the '547 patent. 15:03:28
Q. Going back to this figure that we were 15:03:36
looking at, figure 1, I think you mentioned that 10 15:03:38
is an electrode? 15:03:43
A. Correct. 15:03:49
Q. And in column 10, lines 5 to 6, it describes 15:03:50
10 as an electrode. Not electrodes plural, correct? 15:04:06
A. Correct. Ten is an electrode. 15:04:16
Q. So in figures 1A and 1B, the organic layer 15:04:19
sequence does not include both anodes and cathodes, 15:04:22
correct? It just includes an electrode? 15:04:28
A. Can I hear the question again? 15:04:35
Q. In column 10, lines 5 to 6, it describes 10 15:04:42
as an electrode, not electrodes plural? 15:04:53
A. Correct. 15:05:00
Q. So the organic layer sequence shown in 15:05:00
figures 1A and 1B does not necessarily include both 15:05:04

Pictiva EX2016
Samsung v Pictiva
IPR2024-01095

anodes and cathodes, correct? 15:05:11
MS. BAILY: Object to form. 15:05:15
THE WITNESS: Only one electrode is shown in 15:05:39
figure 1A and figure 1B. But it would be understood 15:05:41
that they are two electrodes. 15:05:54
One can be referred to as anode. And the 15:06:00
other one can be referred to as cathode. 15:06:04
BY MS. CARSON: 15:06:10
Q. But the description of this organic layer 15:06:10
sequence that's depicted in 1A and 1B just refers to 15:06:12
a single electrode, correct? 15:06:16
A. Only a single electrode is shown in these 15:06:27
images. But it would be understood that an OLED has 15:06:30
two electrodes. 15:06:40
Q. All right. When a person of skill in the 15:06:42
arts read columns 10, lines 5 to 6, you're saying -- 15:06:46
it's your opinion they would understand an electrode 15:06:52
10 to refer to two electrodes? 15:07:00
MS. BAILY: Object to form. 15:07:06
THE WITNESS: No. Not necessarily. I'm 15:07:08
just saying that if you look at the pictorial 15:07:10
disclosure of figure 1A, we have element 1. 15:07:17
And element 1 includes electrodes 10. And 15:07:23
based on the pictorial disclosure, the organic layer 15:07:35
sequence 1 includes electrode 10. 15:07:39

Pictiva EX2016
Samsung v Pictiva
IPR2024-01095

BY MS. CARSON: 15:07:50
Q. Your proposed construction requires 15:07:50
electrodes plural, correct? To be in the active 15:07:54
layer? 15:07:58
A. Correct. 15:08:02
Q. And actually strike that. 15:08:03
Your construction requires that the organic 15:08:05
layer sequence has multiple electrodes, correct? 15:08:10
A. That would be understood that there are two 15:08:23
electrodes, one referred to as anode. And the other 15:08:28
one referred to as cathode. 15:08:32
Q. So your proposed construction would exclude 15:08:39
the embodiment described in column 10 where there's 15:08:42
an optoelectronic device that has an organic layer 15:08:45
sequence 1 and an electrode, singular, in an active 15:08:50
region, correct? 15:08:55
MS. BAILY: Object to form. 15:09:18
THE WITNESS: I'm not sure if I follow you. 15:09:19
Any OLED will have two electrodes. And the 15:09:21
embodiment that is described here in column 10 also 15:09:26
has two electrodes. 15:09:29
And I don't see that embodiments being 15:09:37
excluded by the claim construction that I propose. 15:09:41
BY MS. CARSON: 15:09:51
Q. Are you disputing that it describes the 15:09:51

Pictiva EX2016
Samsung v Pictiva
IPR2024-01095

1 embodiment as the device that has an organic layer 15:09:53
2 sequence 1 and an electrode 10 and an active region 15:09:57
3 11? 15:10:14
4 MS. BAILY: Object to form. 15:10:14
5 THE WITNESS: I think that description is 15:10:18
6 fine. 15:10:19
7 However, it is understood that there are two 15:10:19
8 electrodes. And I have not come across an OLED with 15:10:26
9 only one electrode. 15:10:30
10 There is always without exception an anode 15:10:36
11 and a cathode that is associated with a OLED. 15:10:41
12 BY MS. CARSON: 15:10:50
13 Q. I'm not asking about an OLED, though. I'm 15:10:50
14 asking about the claim and the patent, right? So the 15:10:52
15 patent discloses an organic layer sequence which 15:10:57
16 emits a electromagnetic radiation having a first 15:11:00
17 wavelength spectrum during operation. 15:11:03
18 And you proposed to construe an organic 15:11:05
19 layer sequence as an active layer and electrodes. 15:11:08
20 And I guess I'm just here in column 10 of the patent, 15:11:15
21 it's describing an embodiment where it has an organic 15:11:20
22 layer sequence and an electrode, singular, right? 15:11:25
23 A. Correct, my -- 15:11:34
24 Q. And that would be excluded from your 15:11:37
25 construction unless we added another electrode that 15:11:39

Pictiva EX2016
Samsung v Pictiva
IPR2024-01095

is not referenced in this paragraph or shown on the 15:11:44
figure. 15:11:48
MS. BAILY: Object to form. 15:11:53
THE WITNESS: No. That's not how I see it. 15:11:55
I see it in the following way. If we look 15:12:00
at figure 1A, we see that the electrode 10 is part of 15:12:02
the organic layer sequence 1. 15:12:11
So numeral one is the organic layer 15:12:17
sequence. And based on figure 1A, electrodes 10 is 15:12:20
included in the organic layered sequence. 15:12:28
Now, the other electrode, which I say must 15:12:33
exist, is not shown in figure 1A. However, trying to 15:12:36
be fair, if the '547 patent includes one electrode, 15:12:49
number 10, feature number 10, in the organic layer 15:13:02
sequence, feature number 1, then the undoubtedly 15:13:08
existing second electrode in the spirit of fairness 15:13:15
could also be included in the organic layer sequence. 15:13:22
BY MS. CARSON:
Q. And -- 15:13:29
(Speaking simultaneously.) 15:13:29
A. -- found in my proposed construction. 15:13:29
Q. Could it also be included somewhere else 15:13:32
besides this organic layer sequence? 15:13:35
MS. BAILY: Object to form. 15:13:53
THE WITNESS: I think the most reasonable 15:14:17

Pictiva EX2016
Samsung v Pictiva
IPR2024-01095

thing, the natural thing for a POSITA would do, is 15:14:21
come to the conclusion that the second electrode is 15:14:28
not shown, but it does exist. 15:14:37
And following the annotation or better 15:14:43
following the content of figure 1A, the electrode 15:14:54
shown is part of the organic layer sequence. 15:15:05
And the electrode not shown naturally would 15:15:08
also be part of the organic layer sequence. 15:15:13
BY MS. CARSON: 15:15:20
Q. But you haven't identified any portion of 15:15:20
the patent that says that second electrode must be 15:15:24
part of the organic layer sequence, correct? 15:15:28
A. Well, without reading the '547 patent, I can 15:15:57
say that the spirit and the wording of the '547 15:16:00
patent conveys that there are two electrodes -- 15:16:06
Q. In paragraph 75, the portion -- 15:16:13
MS. BAILY: He wasn't done with his answer. 15:16:16
BY MS. CARSON: 15:16:25
Q. The portion of the specification that you 15:16:25
quote in paragraph 75 to support your proposed 15:16:26
construction, refers to an electrode, not electrodes, 15:16:31
correct? 15:16:38
A. Yes. But other parts of the '547 patent 15:17:05
certainly make clear that there are two electrodes. 15:17:08
Q. You didn't quote any other portions of the 15:17:34

Pictiva EX2016
Samsung v Pictiva
IPR2024-01095

specification referring to electrodes in paragraph 75 15:17:39
or 76, correct? 15:17:46
A. I have no specific citation. But I maintain 15:18:50
my view that a person of skill would not exclude that 15:18:56
there are two electrodes. And an embodiment with a 15:19:05
single electrode does not exist. 15:19:11
Q. Except for the one in column 10, where it 15:19:15
describes the figure as including an electrode in the 15:19:20
organic layer sequence, correct? 15:19:23
MS. BAILY: Object to form. 15:19:26
THE WITNESS: No. I would say that a person 15:19:31
of skill would understand that the OLED has two 15:19:32
electrodes. That's pretty much an inherent feature 15:19:35
that an OLED has a cathode and an anode. 15:19:46
To envision a single-electrode OLED, would 15:19:49
not function, would not work. The electrical current 15:19:53
flows into the device by means of the anode. And the 15:20:08
electrical current flows out of the device by means 15:20:14
of the cathode. 15:20:18
And for that reason, we need both anode and 15:20:22
cathode. 15:20:25
BY MS. CARSON: 15:20:26
Q. And it's your position that there's no way 15:20:26
to design an OLED device where one of the electrodes 15:20:28
is not part of the organic layer sequence? 15:20:36

Pictiva EX2016
Samsung v Pictiva
IPR2024-01095

MS. BAILY: Object to form. 15:21:02
THE WITNESS: One could limit the meaning of 15:21:03
organic layer sequence to just organic materials. 15:21:08
However, figure 1A discloses that an 15:21:19
electrode is part of the organic layer sequence. So 15:21:27
the way the '547 patent describes the features of the 15:21:39
OLED, the electrode, which is not -- which typically 15:21:55
is not an organic material but rather a metal or a 15:22:08
conductive transparent oxide is part of the organic 15:22:19
layer sequence. 15:22:27
That is the choice that the inventors made. 15:22:29
And I'm just following what the inventors have 15:22:33
disclosed. 15:22:42
BY MS. CARSON:
Q. So a couple followups. So just to be clear, 15:22:44
you're saying that in order to have an OLED device, 15:22:46
you have to have an active layer with two electrodes, 15:22:51
all OLED devices have that structure. 15:23:00
Is that what you're saying? 15:23:02
A. Yes. An OLED device has to have two 15:23:08
electrodes, an anode and a cathode. 15:23:10
Q. So any OLED device would satisfy this claim 15:23:13
element because you're saying inherently OLED devices 15:23:17
have to have an active layer with two electrodes? 15:23:21
MS. BAILY: Object to form. 15:23:27

Pictiva EX2016
Samsung v Pictiva
IPR2024-01095

THE WITNESS: No. That's not really what I'm saying. I mean there is additional features or requirements in the proposed construction. 15:23:32 15:23:34 15:23:41

BY MS. CARSON: 15:23:47

Q. Can you take a look at column 4, line 46 through 54. Here it's describing (as read): 15:23:48 15:23:58

> An embodiment where the first electrode can be arranged on a substrate. The organic layer or the layer sequence comprising one or more functional layers composed of organic materials can be applied over the first electrode. 15:24:03 15:24:06 15:24:10 15:24:15 15:24:16 15:24:18 15:24:21

Do you see that? 15:24:23

A. Yes. 15:24:27

Q. So is it your position that that is disclosing an embodiment where the first electrode is part of the organic layer sequence? 15:24:28 15:24:30 15:24:34

MS. BAILY: Object to form. 15:24:53

THE WITNESS: The pictorial disclosure of figure 1A shows an electrode being part of the organic layer sequence. 15:24:53 15:24:59 15:25:08

And if we apply that disclosure consistently 15:25:10

Pictiva EX2016
Samsung v Pictiva
IPR2024-01095

across the patent, if we are consistent with this 15:25:14
disclosure, if we follow what the inventors are 15:25:24
teaching us, if we use the guidance of the '547 15:25:33
patent, then we would say in the figure 1A example, 15:25:46
the electrodes is part of the organic layer sequence. 15:25:53
And if we follow that teaching throughout 15:26:03
the patent, then we would come to the conclusion that 15:26:08
the electrodes are part of the organic layer 15:26:12
sequence. 15:26:21
BY MS. CARSON:
Q. Is it your understanding, sir, that the 15:26:21
patent claims are limited to -- strike that. 15:26:28
Is it your understanding that that's shown 15:26:31
in a figure that describes one embodiment limits the 15:26:33
claims? 15:26:37
A. No. 15:26:45
Q. And in this column 4, this section I just 15:26:45
referred you to, it discusses having an organic layer 15:26:47
sequence that is applied over the first electrode, 15:26:52
correct? 15:26:58
A. Correct. 15:27:01
Q. And if you apply a layer over the first 15:27:02
electrode, that electrode is not part of the layer, 15:27:05
correct? 15:27:11
A. One would think so. But look at figure 1A, 15:27:11

Pictiva EX2016
Samsung v Pictiva
IPR2024-01095

there the disclosure, the information conveyed is 15:27:23
different so -- 15:27:27
Q. I'm not talking about figure 1 or the 15:27:32
embodiment described in figure 1. I'm talking about 15:27:33
the embodiment that's described in column 4. 15:27:36
And in column 4, it describes an embodiment 15:27:38
where you have a first electrode. And then you have 15:27:42
organic layer sequence that's applied over the first 15:27:48
electrode. 15:27:51
And then you have functional layers, which 15:27:52
can comprise the active region that connect. And 15:27:56
then the second electrode is applied over the 15:28:04
functional layers. Or over the at least one organic 15:28:06
layer. 15:28:13
So in that embodiment that's described in 15:28:13
column 4, are you saying that one of skill in the art 15:28:16
would understand that when the inventor said you 15:28:20
apply the organic layer sequence over the electrode, 15:28:24
that what they really meant was that the organic 15:28:31
layer sequence included the electrode? 15:28:32
MS. BAILY: Object to form. 15:28:40
THE WITNESS: I follow your reasoning. I 15:28:41
fully follow your reasoning. However, we need to be 15:28:42
consistent. 15:28:47
Either the electrodes are part of the 15:28:50

Pictiva EX2016
Samsung v Pictiva
IPR2024-01095

organic layer sequence or they're not. And either 15:28:53
way is fine with me. 15:28:58
However, we want to be consistent. And 15:29:00
being inconsistent here, having a different 15:29:04
disclosure here and there is not satisfying. 15:29:09
So the problem is to some extent, the 15:29:12
inconsistency that we find in the '547 patent. 15:29:17
And by the construction that I have chosen, 15:29:23
I have tried to overcome the inconsistency that is 15:29:29
described in the '547 patent. And that you are 15:29:33
pointing out. 15:29:37
Basically what you're doing is you point out 15:29:40
look here, in this description, the electrode is not 15:29:42
part of the organic layer sequence. But in that 15:29:46
description, the electrode is part of the organic 15:29:52
layer sequence. 15:29:56
And so I cannot change the inconsistent 15:29:58
disclosure of the '547 patent in this regard. 15:30:09
And it's not a -- in my view, it's more like 15:30:12
an naming, a nomenclature issue. It's not a 15:30:16
fundamental issue. 15:30:23
I'm just saying there are different 15:30:29
disclosures in the '547 patent. And I have followed 15:30:31
a certain disclosure that is made in the '547 patent. 15:30:33
///

Pictiva EX2016
Samsung v Pictiva
IPR2024-01095

BY MS. CARSON: 15:30:38
Q. And do you understand that it is a common 15:30:38
canon of claim construction that the claims should be 15:30:43
interpreted to encompass all of the embodiments 15:30:46
disclosed in the patent specification? 15:30:54
MS. BAILY: Object to form. 15:30:59
THE WITNESS: Correct. And my construction 15:31:00
does not exclude any embodiment based on the facts. 15:31:02
Or based on the contention that there would be an 15:31:06
LED -- there would OLED having only one electrode 15:31:10
because such OLED does not exist. 15:31:17
BY MS. CARSON: 15:31:24
Q. But your construction would exclude a 15:31:31
situation where the electrodes are not included in 15:31:34
the organic layer sequence and are instead included 15:31:36
either below or above the organic layer sequence as 15:31:42
described in the embodiment that we were just looking 15:31:47
at from column 4, right? 15:31:52
MS. BAILY: Object to form. 15:32:11
THE WITNESS: I would not see an exclusion 15:32:28
based on that. 15:32:29
BY MS. CARSON: 15:32:32
Q. So it's your opinion that the portion of 15:32:32
your construction that refers to an organic layer 15:32:39
sequence being an active layers and electrodes would 15:32:45

Pictiva EX2016
Samsung v Pictiva
IPR2024-01095

1 not exclude a situation where the electrodes were not 15:32:50
2 part of the organic layer sequence. And were instead 15:32:57
3 positioned below and above the organic layer sequence 15:33:06
4 as well as perhaps a functional layer if it's 15:33:15
5 included? 15:33:19
6 MS. BAILY: Object to form. 15:33:27
7 THE WITNESS: My view is that any prior art 15:33:27
8 product -- that any prior art device or any accused 15:33:31
9 device will have a light-emitting active layer and 15:33:39
10 will also have electrodes. 15:33:49
11 So the feature or the features that I 15:33:51
12 mentioned in my construction, active layer and 15:33:54
13 electrodes, you will find in all prior art devices 15:33:59
14 and you will find in all accused devices. 15:34:05
15 Therefore, I don't see the exclusion that 15:34:09
16 you're mentioning. 15:34:14
17 BY MS. CARSON: 15:34:19
18 Q. So is it not actually your position that an 15:34:20
19 organic layer sequence requires an active layer and 15:34:23
20 electrodes to be -- 15:34:30
21 A. Sorry. 15:34:35
22 MS. BAILY: Could you ask the question 15:34:42
23 again? 15:34:46
24 MS. CARSON: Sure. 15:34:46
25 Q. I'm just describing to figure out when you 15:34:47

Pictiva EX2016
Samsung v Pictiva
IPR2024-01095

construe an organic layer sequence to mean an active 15:34:49
layer and electrodes, are you taking the position 15:34:52
that the electrodes have to be part of the active 15:34:57
layer? 15:35:01
A. Some publications will say so. Some other 15:35:08
publications will not say so. 15:35:10
Q. I'm asking what you're saying. It's your 15:35:12
construction. 15:35:15
MS. BAILY: Object to form. 15:35:25
THE WITNESS: Based on the description of 15:35:27
the '547 patent that there are two electrodes and 15:35:29
based on the pictorial disclosure of figure 1A, which 15:35:32
includes electrodes 10 as part of the organic layer 15:35:39
sequence, I have followed the teachings of the '547 15:35:47
patent. And interpreted the organic layer sequence 15:35:56
as the active layer and the electrodes. 15:35:59
But there is no exclusion that would be 15:36:02
based on these terms because every OLED in the prior 15:36:08
art and every accused device will have an active 15:36:16
layer and will have two electrodes. 15:36:23
BY MS. CARSON: 15:36:29
Q. Okay. So you're not saying the electrodes 15:36:29
have to be part of or in the same layer as the active 15:36:32
layer. 15:36:39
A. The active layer typically is between the 15:36:43

Pictiva EX2016
Samsung v Pictiva
IPR2024-01095

two electrodes. 15:36:46

Q. And a system that had additional layers 15:36:47

between the two electrodes would not be excluded by 15:36:51

your construction? 15:36:56

A. Correct. If there is like a hole transport 15:36:57

layer or an electron transport layer, those layers 15:37:01

may be present as well. 15:37:09

Q. The other part of your construction is that 15:37:15

you've construed would emit an electromagnetic 15:37:20

radiation having a first wavelength spectrum during 15:37:24

operation to mean a wavelength spectrum which 15:37:27

corresponds to the entire wavelength spectrum of the 15:37:41

electromagnetic radiation emitted by the organic 15:37:45

layer sequence during operation; is that right? 15:37:47

A. Correct. 15:37:55

15:38:12

Q. And I think we went over this with an 15:38:12

earlier patent. But what is the wavelength spectrum? 15:38:13

A. The wavelength spectrum starts at a starting 15:38:20

wavelength and ends at a ending wavelength. 15:38:25

And if we look at the claim of the '547 15:38:32

patent -- if we look at claim one of the '547 patent, 15:38:45

you can see that a first wavelength spectrum is 15:38:57

disclosed, for example, in column 14, line 57. 15:39:01

And then if you go further down in claim 15:39:15

Pictiva EX2016
Samsung v Pictiva
IPR2024-01095

one. If you go to column 15, line number 4, you see 15:39:20
what is being disclosed here is one part of the 15:39:38
second wavelength spectrum. 15:39:46
So the claims disclose part of a wavelength 15:39:50
spectrum. And they disclose the wavelength spectrum. 15:39:59
And so when we say part of, we mean a part 15:40:07
of. And if we say, the spectrum, we mean not part of 15:40:14
the spectrum but the full spectrum. That is my 15:40:23
reasoning. 15:40:28
We have a clear disclosure of the spectrum. 15:40:30
And the part of the spectrum. And so part of the 15:40:34
spectrum is a fraction of the spectrum. And the 15:40:39
spectrum naturally is the whole spectrum or the 15:40:44
entire spectrum. 15:40:50
Q. In your opinion, what is the difference 15:41:11
between "in as unimpeded manner as possible" and 15:41:16
"substantially without alteration of its spectral 15:41:24
components" in the parties competing constructions of 15:41:29
transparent? 15:41:33
MS. BAILY: Object to form. 15:41:41
THE WITNESS: In an "as unimpeded manner as 15:42:02
possible" means to me there is no intention of 15:42:04
impeding.
We design the optical structure in such a 15:42:11
way that the light is getting through -- we transmit 15:42:14

Pictiva EX2016
Samsung v Pictiva
IPR2024-01095

the light. 15:42:19
But even a window pane, a window glass pane, 15:42:21
modifies the intensity by a small amount. 15:42:42
And so we design a window to be transparent. 15:42:49
The light is going through the window in as an 15:42:54
unimpeded manner as possible. 15:43:01
And the same principle holds here. That is 15:43:03
we have a (inaudible) layer that is a transparent. 15:43:08
And if it's transparent, it will let the light go 15:43:18
through, it will let the light pass through. 15:43:24
And we intend it to go fully through. But 15:43:34
sometimes practical circumstances have some 15:43:41
limitations. 15:43:50
BY MS. CARSON: 15:43:53
Q. So to evaluate whether a particular device 15:43:53
or a particular component satisfied your construction 15:43:56
of "in as an unimpeded manner as possible," would you 15:44:02
have to look at the intent of those who designed it? 15:44:08
A. No. 15:44:12
MS. BAILY: Object to form. 15:44:12
BY MS. CARSON: 15:44:17
Q. No? Are you able to identify any objective 15:44:17
criteria sitting here today that a person of skill in 15:44:20
the art could use to determine if something is "in as 15:44:25
unimpeded manner as possible. " 15:44:29

Pictiva EX2016
Samsung v Pictiva
IPR2024-01095

A. I can give you examples. For example, a window glass pane is transparent. The glasses of eyeglasses are transparent. I can give you more examples. 15:44:33 15:44:37 15:44:48 15:45:00

MS. CARSON: Let's take a break. 15:45:01

VIDEO OPERATOR: Counsel, do you agree to go off the record? 15:45:07 15:45:14

MS. BAILY: Yes. 15:45:14

VIDEO OPERATOR: Going off the record. The time is 5:45 p.m. 15:45:16 15:45:17

15:59:26

(Recess taken.)

15:59:29

VIDEO OPERATOR: Back on the record. The time is 5:59 p.m. 15:59:32 15:59:33

BY MS. CARSON: 15:59:36

Q. All right. I want to turn to the '492 patent. 15:59:36 15:59:43

And you've provided constructions for optoelectronic component and passive electric component, correct? 15:59:48 15:59:55 15:59:57

A. Yes. 16:00:15

Q. Are the proposed constructions that you 16:00:16

Pictiva EX2016
Samsung v Pictiva
IPR2024-01095

provided for those terms what you would consider to 16:00:17
be the plain-and-ordinary meaning? 16:00:23
MS. BAILY: Object to form. 16:00:31
THE WITNESS: I would say they are the 16:00:42
plain-and-ordinary meaning in the context of the '492 16:00:59
patent. 16:01:10
BY MS. CARSON: 16:01:14
Q. Your proposed construction for 16:01:16
optoelectronic component would exclude an electronic 16:01:20
component that sensed or detected electromagnetic 16:01:28
radiation if it didn't convert that energy, correct? 16:01:31
MS. BAILY: Object to form. 16:01:42
THE WITNESS: No. A detector receives 16:01:49
optical energy and converts it into electrical 16:01:51
energy. So a photo detector would be included in 16:01:59
that construction. 16:02:04
Similarly, a sensor which senses optical 16:02:05
energy -- senses it by converting it into electrical 16:02:13
energy. And the electrical energy is then provided 16:02:19
to some sensing instrument. 16:02:24
But I would say that detectors and sensors 16:02:27
are included in this construction. 16:02:32
BY MS. CARSON: 16:02:51
Q. Is it your opinion that optoelectronic 16:02:51
components and passive components are mutually 16:02:56

Pictiva EX2016
Samsung v Pictiva
IPR2024-01095

exclusive within the context of the patent? 16:02:58
A. Yes. 16:03:41
Q. Within the context of the patent, would you 16:03:41
consider a photo resistor to be a passive component 16:03:43
or an optoelectronic component? 16:03:47
MS. BAILY: Object to form. 16:04:10
THE WITNESS: A photo resistor would receive 16:04:11
optical energy that would modify electrical energy or 16:04:14
that that would be converted into electrical energy. 16:04:27
And therefore a photo resistor in my opinion would be 16:04:35
an optoelectronic component. 16:04:39
BY MS. CARSON: 16:04:44
Q. Outside the context of this patent, are 16:04:44
photo resisters typically considered passive 16:04:46
electronic components? 16:04:52
MS. BAILY: Object to form. 16:04:54
THE WITNESS: I've not looked into this 16:05:03
question. Photo resistor didn't come up. But if a 16:05:07
component is used to detect optical energy and 16:05:14
converts this optical energy into some kind of 16:05:21
electrical energy, I would consider it to be an 16:05:25
optoelectronic component. 16:05:30
BY MS. CARSON: 16:05:34
Q. What if it only detects optical energy but 16:05:34
doesn't convert it? 16:05:38

Pictiva EX2016
Samsung v Pictiva
IPR2024-01095

MS. BAILY: Object to form. 16:05:40
THE WITNESS: I do not understand what kind 16:05:50
of device you are envisioning. 16:05:53
BY MS. CARSON: 16:06:03
Q. Are you testifying that all photo resisters 16:06:03
convert energy? 16:06:06
A. Based on my understanding, photo resisters 16:06:14
receive optical energy. And their resistance changes 16:06:18
when being illuminated. 16:06:34
And this change in resistance leads to a 16:06:37
current flow or to a change in current flow. And 16:06:44
this change in current flow can be further used to 16:06:52
sense or to detect an optical signal. 16:07:00
Q. Your construction of passive electronic 16:07:19
component refers to the examples of the capacitor or 16:07:23
a resistor, correct? 16:07:29
A. Correct. 16:07:32
Q. There are other types of passive electronic 16:07:35
components other than capacitors and resistors, 16:07:38
correct? 16:07:42
A. Yes. For example an inductor. But 16:07:46
inductors are relatively rare. 16:07:49
Q. Is it your position that a component that 16:08:17
absorbs electromagnetic radiation would be an 16:08:20
optoelectronic component or a passive component? 16:08:29

Pictiva EX2016
Samsung v Pictiva
IPR2024-01095

A. Well, just absorbing is not enough. 16:08:39
Anything -- any object will absorb some 16:08:42
electromagnetic radiation. 16:08:47
And it needs to convert it to an electrical 16:08:51
signal. So if you have an optical stimulus, an 16:08:56
optical signal or optical energy, that optical signal 16:09:05
is impinging on the device. 16:09:14
And as a result of the detection process, we 16:09:23
obtain an electrical signal. 16:09:26
Q. All right. Your response was "just 16:09:30
absorbing is not enough." 16:09:36
Did you mean a component that just absorbs 16:09:38
electromagnetic radiation would not be considered an 16:09:41
optoelectronic component? Or what are you referring 16:09:46
to? 16:09:48
A. I'm referring to the fact that the optical 16:09:52
energy needs to be converted into electrical energy. 16:09:54
We could say light needs to be converted to a 16:10:00
current. Or light causes a current. Or we could say 16:10:08
a change of the light intensity causes a change in 16:10:16
the current flow. 16:10:22
So we have like electrical current, we have 16:10:29
electrical voltage, those are the electrical signals. 16:10:33
And we can generally talk about these electrical 16:10:37
signals as electrical energy. 16:10:39

Pictiva EX2016
Samsung v Pictiva
IPR2024-01095

Q. So not quite my question. My question is 16:10:45
just really simple. It's would you consider a 16:10:47
component that only absorbs electromagnetic radiation 16:10:50
to be an optoelectronic component within the context 16:10:57
of the patent? 16:11:01
A. I would need to have some more information. 16:11:04
Would that component that you're envisioning, would 16:11:06
that have any electrical signal that would change 16:11:09
based on the optical signal? 16:11:18
Would it work as a detector? Would it sense 16:11:26
if light is absorbed by some means? Would the 16:11:29
electrical signal, the output signal, would that 16:11:33
change in any way if light is being absorbed? 16:11:36
That is the information that I would need. 16:11:40
Q. So under your proposed construction, you'd 16:11:43
need more information than just that a component 16:11:49
absorbs electromagnetic radiation to determine 16:11:53
whether it was an optoelectronic component or a 16:11:56
passive electronic component? 16:11:59
A. If that component converts optical energy to 16:12:08
electrical energy, it's an optoelectronic component. 16:12:14
And that's the information I would need to know. I 16:12:21
can envision both possibilities. 16:12:36
Q. In your proposed -- or in Samsung's proposed 16:12:40
construction for passive electronic component, 16:12:50

Pictiva EX2016
Samsung v Pictiva
IPR2024-01095

there's a note in the box, "phrase is limiting to the 16:12:55
extent it's a preamble." 16:12:57
And I just want to confirm you didn't 16:13:00
provide any opinions in that section of your report 16:13:07
from paragraph 161 to 167 to support or evidence that 16:13:09
the preambles of claim 1 and 16 are limiting, 16:13:20
correct? 16:13:28
A. I think that's a fair statement, correct. 16:13:28
MS. CARSON: Introduce an exhibit. 16:14:22
(Exhibit 12 was marked for identification by
the court reporter and is attached hereto.)
BY MS. CARSON:
Q. Let me know when you've had a chance to pull 16:14:23
it up. And if you could direct your attention to 16:14:26
claim 10. 16:14:43
Are you there? 16:15:07
A. Not yet. Yes, I am there. 16:15:25
Q. So claim 10 recites a method for producing 16:15:28
an optoelectronic assembly, correct? 16:15:33
A. Correct. 16:15:41
Q. And an optoelectronic assembly can have both 16:15:41
passive components and optoelectronic components, 16:15:44
correct? 16:15:50
A. Correct. 16:15:53
Q. And so the first step is forming a passive 16:15:54

Pictiva EX2016
Samsung v Pictiva
IPR2024-01095

electronic component, correct? 16:15:59
A. Yes. 16:16:15
Q. And part of forming that passive electronic 16:16:16
component is that the passive electronic component 16:16:18
comprises a second electronically conductive layer on 16:16:27
the first electronically conductive layer, correct? 16:16:31
A. Yes. 16:16:40
Q. And if you look further down in the claim, 16:16:40
the second layer demarcates a component region 16:16:44
performing an optoelectronic component, correct? 16:16:47
A. Yes. 16:17:15
Q. And that component region is part of the 16:17:16
passive electronic component? 16:17:18
A. Say that again, please. 16:17:40
Q. The component region is part of the passive 16:17:41
electronic component? 16:17:47
Do you see the limitation that says, 16:18:22
"applying the dielectric in a structured fashion to 16:18:22
the second layer such that dielectric demarcates a 16:18:25
component region." 16:18:30
A. Yes. I see that. 16:18:36
Q. And the second layer that they're referring 16:18:37
to where you would demarcate the component region is 16:18:39
part of the passive electronic component, correct? 16:18:43
A. No. 16:18:54

Pictiva EX2016
Samsung v Pictiva
IPR2024-01095

Q. Above it says, "the passive electronic 16:18:55
component comprising a second electronically 16:18:57
conductive layer." 16:19:01
Do you see that? 16:19:02
A. Yes. 16:19:19
Q. Are you saying that in the later element 16:19:20
where it refers to the second layer, it's not 16:19:22
referring back to a second electronically conductive 16:19:25
layer? 16:19:30
A. Can you please repeat your question? 16:19:34
Q. When it says the second layer in the element 16:19:40
that starts, "applying the dielectric in a structured 16:19:44
fashion," that's referring to the second layer that's 16:19:47
described as being part of the passive electronic 16:19:52
component above, correct? 16:19:56
A. I do not agree with your characterization. 16:20:14
And let me explain why. 16:20:16
If you go to the '492 patent, and if we look 16:20:19
at figure 16, figure 16 is the embodiment that is 16:20:35
being described in claim 10. 16:20:47
And you see that the dielectric layer 28 is 16:20:57
applied in multiple regions. 28 is applied in the 16:21:14
capacitor region on the left-hand side. 16:21:21
And 28 is also applied in the optoelectronic 16:21:29
component region, which is shown as a diode on the 16:21:34

Pictiva EX2016
Samsung v Pictiva
IPR2024-01095

1 right-hand side. 16:21:39
2 And we see that the passive component, the 16:21:42
3 capacitor, on the left-hand side is clearly separated 16:21:46
4 and not part of the optoelectronic component, which 16:21:55
5 is shown on the right-hand side of figure 16. 16:22:02
6 Q. Do you dispute that an OLED layer is an 16:22:30
7 optoelectronic component? 16:22:33
8 A. No. An OLED is an optoelectronic component. 16:22:40
9 Q. You've opined that plurality of capacitors 16:22:45
10 and or resisters in claim 6 is indefinite, correct? 16:22:54
11 A. Correct. 16:23:11
12 Q. And your reasoning is that neither claim 1 16:23:12
13 nor claim 2 recites a resistor? 16:23:20
14 A. Correct. 16:23:32
15 Q. The preamble of claim 1 is a method for 16:23:33
16 producing a passive electronic component, correct? 16:23:40
17 A. Correct. 16:23:50
18 Q. And you've proposed that passive electronic 16:23:50
19 component should be construed to mean an electronic 16:23:53
20 component such as a capacitor or resistor? 16:24:00
21 A. Correct. 16:24:09
22 Q. So under your construction, claim 1 would be 16:24:09
23 describing a method for producing a passive 16:24:12
24 electronic component, which could include a capacitor 16:24:16
25 or resistor, correct? 16:24:19

Pictiva EX2016
Samsung v Pictiva
IPR2024-01095

A. No. In claim 1 what is being described is a 16:24:26
capacitor. And claim 1 would also -- based on your 16:24:36
interpretation, would also include an inductor 16:24:48
because an inductor is a passive electronic component 16:24:51
as well. 16:24:55
But neither an inductor nor a resistor are 16:24:59
described or taught in claim 1. And for that reason, 16:25:03
I have come to the conclusion that a capacitor is 16:25:09
being disclosed. 16:25:18
A person of skill reading claim 1 would 16:25:22
understand that based on the layer sequence and based 16:25:25
on the structure, a capacitor is disclosed. And not 16:25:28
a resistor and not an inductor. 16:25:32
Q. So despite your construction of passive 16:25:42
electronic component encompassing both capacitors and 16:25:48
resistors, you're saying that it's your belief that 16:25:52
claim 1 is limited to disclosing a capacitor? 16:25:57
A. What is being detailed after the preamble is 16:26:07
the capacitor. And is not a resistor. 16:26:10
What is detailed after the preamble is not 16:26:15
an inductor. What is detailed is a capacitor. And 16:26:20
based on that, there is neither a resistor nor an 16:26:30
inductor described in claim 1. 16:26:37
Q. So does the term passive electronic 16:26:48
component in the preamble of claim 1 describe the 16:26:55

Pictiva EX2016
Samsung v Pictiva
IPR2024-01095

1 invention? 16:27:06
2 MS. BAILY: Object to form. 16:27:16
3 MS. CARSON: Actually strike that. 16:27:22
4 Q. Does the term passive electronic component 16:27:23
5 in the preamble of claim 1 impact the scope of the 16:27:27
6 claim at all in view of your opinion that the steps 16:27:33
7 limit it to a capacitor? 16:27:38
8 MS. BAILY: Object to form. 16:27:44
9 THE WITNESS: Yes. I believe that the 16:27:51
10 preamble excludes optoelectronic components for what 16:27:53
11 is being described in claim 1. 16:28:06
12 BY MS. CARSON: 16:28:11
13 Q. All right, I have no further questions. 16:28:23
14 You're a mute. Or we can't hear you. 16:28:31
15 MS. BAILY: I was thinking out loud. I 16:28:37
16 don't think there was any confidential information 16:28:39
17 discussed. 16:28:43
18 I'm going to preliminarily designate the 16:28:47
19 transcript. And I should be able to withdraw it 16:28:49
20 tomorrow. I just want to make sure there's that 16:28:52
21 confidential information in the transcript. 16:28:54
22 MS. CARSON: I'm pretty sure I didn't 16:28:56
23 introduce anything so yeah -- 16:28:57
24 MS. BAILY: I'm 99 percent sure. I'll just 16:29:02
25 check. And then I should be able to withdraw it in 16:29:05

Pictiva EX2016
Samsung v Pictiva
IPR2024-01095

its entirety. 16:29:08

MS. CARSON: Okay. 16:29:09

MS. BAILY: That's it. 16:29:11

MS. CARSON: So we can go off the record. 16:29:13

VIDEO OPERATOR: This completes today's 16:29:16

deposition. We are going off the record. The time 16:29:17

is 6:29. 16:29:20

Pictiva EX2016
Samsung v Pictiva
IPR2024-01095

I declare under penalty of perjury under the laws of the State of California that the foregoing is true and correct.

Executed on _____, 2024, at

_____, _____.

_____

SIGNATURE OF WITNESS

Pictiva EX2016
Samsung v Pictiva
IPR2024-01095

STATE OF CALIFORNIA) ss.
COUNTY OF LOS ANGELES)

I, Lori M. Barkley, CSR No. 6426, do hereby certify:

That the foregoing deposition proceedings were taken before me at the time and place therein set forth and were recorded stenographically by me, and were thereafter transcribed under my direction and supervision, and that the foregoing pages contain a full, true and accurate record of all proceedings and testimony to the best of my skill and ability.

I further certify that I am neither counsel for any party to said action, nor am I related to any party to said action, nor am I in any way interested in the outcome thereof.

IN WITNESS WHEREOF, I have subscribed my name this 18th day of December, 2024.

LORI M. BARKLEY, CSR No. 6426

Pictiva EX2016
Samsung v Pictiva
IPR2024-01095

REBECCA CARSON, ESQ.
Rcarson@irell.com

December 18, 2024

RE: Pictiva Displays International LTD v.
Samsung Electronics Co. LTD
12/11/2024, Fred Schubert, Volume I, (# 7058037).
The above-referenced transcript has been
completed by Veritext Legal Solutions and
review of the transcript is being handled as follows:

__ Per CA State Code (CCP 2025.520 (a)-(e)) – Contact Veritext to schedule a time to review the original transcript at a Veritext office.

__ Per CA State Code (CCP 2025.520 (a)-(e)) – Locked .PDF Transcript - The witness should review the transcript and make any necessary corrections on the errata pages included below, notating the page and line number of the corrections. The witness should then sign and date the errata and penalty of perjury pages and return the completed pages to all appearing counsel within the period of time determined at the deposition or provided by the Code of Civil Procedure. Contact Veritext when the sealed original is required.

__ Waiving the CA Code of Civil Procedure per Stipulation of Counsel - Original transcript to be released for signature as determined at the deposition.

__ Signature Waived – Reading & Signature was waived at the time of the deposition.

Pictiva EX2016
Samsung v Pictiva
IPR2024-01095

__ Federal R&S Requested (FRCP 30(e)(1)(B)) – Locked .PDF Transcript - The witness should review the transcript and make any necessary corrections on the errata pages included below, notating the page and line number of the corrections. The witness should then sign and date the errata and penalty of perjury pages and return the completed pages to all appearing counsel within the period of time determined at the deposition or provided by the Federal Rules.

_X_Federal R&S Not Requested - Reading & Signature was not requested before the completion of the deposition.

Pictiva EX2016
Samsung v Pictiva
IPR2024-01095

&

& 3:3,11 6:9 170:24 171:9

0

00495 1:11 2:7 5:20

1

1 1:25 4:9 7:14 7:16 51:10 77:15 79:24 122:25 124:6,6 124:16,20,21 124:23 125:4 125:18 136:9,9 137:11 138:22 138:23,25 139:15 140:2 141:7,15 147:3 147:4 161:6 164:12,15,22 165:1,2,7,10,17 165:23,25 166:5,11 171:1
10 94:23 95:14 136:10,10 137:11,14,15 137:21,21 138:16,18,23 138:25 139:13 139:20 140:2 140:20 141:6,9 141:14,14 143:7 151:13 161:15,18 163:20
100 7:12 47:9 86:25
101 39:14
102 45:3
103 40:2
105 4:17
108 77:21 78:3 78:8
10:02 48:11
10:49 26:22
11 1:19 2:17 4:20 5:1 68:7 135:12,15 136:5,7 140:3
110 77:18,20,25 78:6,10
113 4:18
11:02 27:2
11th 5:6
12 4:21 161:10
12/11/2024 170:5
12:13 48:16
13 18:2,5,10 78:24 79:7 122:23 123:2,5 123:7,8,14,16 124:2,6,7,11,16 124:18,22,25 125:3,10,15,17
135 4:20
138 116:22
139 119:23 120:17 121:14
14 152:24
140 87:5,10,17 88:23
142 119:23 121:14
15 153:1
151 90:4
151a 87:4,9,16 88:5,14,21 89:14,18
151c 90:13
152c 90:12
16 100:13 110:11,16 161:6 163:19 163:19 164:5
161 4:21 161:5
164 4:17 104:21 105:4 105:10 106:8 106:15,21 108:16 112:15 112:17,21 114:2,6 116:2 116:7,12,25 118:19 119:16 120:15,17 121:7,8
167 161:5
17 110:22,23 111:4
171 1:25
18 170:3
18th 169:18
19 4:16 17:5 93:25
1981 17:2
1985 17:3
1988 17:4
1995 17:4,5,7
19th 92:22
1:08 126:3
1:11 126:3
1:41 66:19,24
1a 78:22 79:18 80:20 136:7 137:17,25 138:4,10,22 141:6,9,12 142:5 144:4 145:23 146:4 146:25 151:12
1b 78:23 79:18 79:22 80:20 137:17,25 138:4,10
1c 80:22 82:17
1d 81:8,14,22 82:1,13,21
1h 80:23

2

2 4:10 13:19 49:1,3 59:9,16 59:20,25 164:13
20 4:19 93:8,10 93:13,21 94:20 95:11,19 96:2 96:9

Pictiva EX2016
Samsung v Pictiva
IPR2024-01095

200 7:13
2001 4:19
2004 4:16 92:22 93:25
2010 19:7
2015 25:9
2020 25:9
2024 1:19 2:17 5:1,6 7:6 168:4 169:18 170:3
2025.520 170:9 170:12
223 4:10,11 27:9,21 28:6 28:17,22 29:5 29:23 34:7 35:1 45:22 48:20 52:7,11 52:14 53:3,8 53:10,15 58:10 60:15 62:19 63:1,18 64:5 65:3,3,16,24 66:7
22nd 3:14
237 97:5,6
250 126:22 127:1 129:19
28 110:11,16 163:21,22,24
283 94:7,9,14 94:15 95:1,2,3
2:23 1:11 2:7 5:20

3

3 4:11 13:19 49:9,12,16 50:12,13 110:22,23 111:4
3-0 119:17
30 94:23 95:13 119:17 171:1
300 133:7
34 67:12,13 69:2 72:4
347 91:9,18
350 130:13,16
380 134:5
383 95:1
389 4:12 67:3 84:9 85:1 88:1 88:11 89:6 90:18 91:12,19 92:16 100:12
3:11 104:13
3:23 104:18
3a 113:19 114:14
3b 113:18,22 114:8,11,14
3c 113:17,22 114:14

4

4 4:12 67:3,5 79:11 81:2 110:9,11,16 117:15,15,25 118:25 119:15 119:16 145:5 146:17 147:5,6 147:16 149:18 153:1
40 27:5,8 133:9
400 3:6 128:18 128:25 129:9 130:6,12,21,25 131:24 132:6,7 132:9 133:8,14 134:20
406 102:5,6,9 102:11,13,19
408 100:21 101:5,12,14,15 101:19 102:2 102:14,20
415-875-6336 3:16
42 43:21 44:10
425 126:19,22 127:4,7,8
433 4:13
44 53:23
46 145:5
460 129:19
49 4:10
492 4:21 155:19 156:5 163:18
4:20 126:11
4:33 126:16
4a 100:15 101:4,6,18,19 101:25
4b 100:15 101:4,6,9,19,20 101:25,25 102:7

5

5 4:13 80:15,16 91:23,25 98:4 98:5 99:1 100:3,5 110:21 110:23 111:4 137:14,21 138:16
50 3:14 4:11 62:6
500 133:14 134:5
54 145:6
547 4:20 134:23 135:12 136:4 137:9 141:13 142:13 142:14,23 144:6 146:3 148:7,10,18,23 148:24 151:11 151:14 152:21 152:22
55 51:1,3
56 84:6,20
57 152:24
58 92:18,21 96:14
59 96:24
5:45 155:11

Pictiva EX2016
Samsung v Pictiva
IPR2024-01095

5:59 155:16

6

6 4:5,14 86:18 86:19,22 87:2 90:21 91:10 100:13,13 102:18 137:14 137:21 138:16 164:10
60 58:10
62 50:20 51:1
620 134:13
6426 1:23 2:18 169:4,21
67 4:12
6966 169:20
6:29 2:16 167:7

7

7 4:9,16 81:18 81:22 82:2,13 82:21 83:4,7 94:3,4
700 132:14,15
7046685 1:24
7058037 170:5
730 132:4,7,10 132:15 133:6 134:20
75 142:16,20 143:1
750 128:15 129:1,9 130:7 130:17,23,25 132:3,14,14
76 143:2

8

8 4:17 105:4,6
80 4:13
840 3:6
86 4:14

9

9 4:18 81:10,16 81:19,23 82:2 82:14,22 83:2 83:8 113:4,5,8
90s 18:9
92660 3:7
94 4:16
94111 3:15
949-760-0991 3:8
99 166:24
9:51 2:16 5:2,6

a

a.m. 2:16 5:2,6 26:22 27:2
ability 89:18 169:12
able 8:14,21 9:5,17 10:1 20:23 21:1,6 21:11 23:18 24:3 35:20 37:7 38:2,16 49:6,8 50:16 63:20 68:23 87:22 89:21 93:5 121:17,18 122:15 124:15 154:22 166:19 166:25
above 45:3 56:14 81:9,15 81:18,24 82:2 83:5 130:7,13 130:25 149:16 150:3 163:1,15 170:6
absent 34:2
absorb 159:2
absorbed 160:11,13
absorbing 159:1,11
absorbs 158:24 159:12 160:3 160:17
ac 49:12
academia 15:17
academic 16:20
acceptable 132:5,11,15,15 132:16
access 7:20 55:11 56:15,16 57:12 90:9
accessible 55:5
account 89:5
accurate 47:5 169:11
accused 122:2 122:17 150:8 150:14 151:19
acetate 46:1,7 46:14,20,22,25 47:7
acquired 16:14
action 1:10 2:7 6:1 12:22 169:14,15
active 26:8 135:7,10,17,20 135:21,22,23 135:24,25,25 136:2,3,5,7,12 136:14,17,17 136:25 139:3 139:15 140:2 140:19 144:17 144:24 147:11 149:25 150:9 150:12,19 151:1,3,16,19 151:23,25
activities 15:19 15:19 19:4
acts 84:11
actual 90:14
actually 71:16 105:21 139:6 150:18 166:3
add 84:11 126:21
added 7:14 67:1 140:25
addition 96:1 109:18,22

Pictiva EX2016
Samsung v Pictiva
IPR2024-01095

additional 32:24 33:6 35:17 79:14,21 80:22 98:24 103:14 113:25 145:2 152:2
additionally 20:21
address 99:10 134:24 135:5
addressed 100:8
adhesive 94:12 94:21 95:6,12
administered 6:14
affect 102:19
affiliation 15:17
affiliations 6:6
agglomerations 114:20
ago 19:2
agree 5:14 26:17 34:4,9 41:17 43:10 54:9,12,13 58:22 67:22 74:15 85:25 86:16 87:4,9 88:22 95:24 96:17 99:20 101:4 102:17 104:25 106:11 109:7 111:16 113:1 123:2,10 125:24 136:19 155:6 163:16
ahead 8:24 97:4
al2o3 35:11 36:8
alkaline 31:15
alleged 34:2 42:4 80:25
allegedly 44:2 116:24 118:14
allow 119:20
allowed 9:11
allows 118:14
alteration 153:17
alternatively 64:18
aluminium 36:8,9
aluminum 35:11
ambiguity 32:14 117:23
amend 126:21
america 1:13 2:9
amorphous 18:22 19:9 20:20 21:6 23:11 24:5,11
amount 154:3
analysis 99:7
angeles 169:2
annotation 142:4
anode 138:6 139:10 140:10 143:14,17,20 144:21
anodes 137:18 138:1
answer 9:14 35:5 39:2 46:4 46:13,24 47:3 47:6,13 52:24 60:25 63:2,21 66:2 76:3,24 78:10 82:16 89:4,8,25 90:10 91:8 92:7 93:5,24 97:13 99:1 117:12,14 121:17,18 122:14 136:11 142:17
answered 8:24 9:7 76:8 77:5
answering 75:16
answers 103:8
anymore 26:3
anyway 24:14
apparatus 124:6,12,19,21 124:24
appearance 6:4
appearances 3:1 6:6
appearing 170:18 171:7
appears 59:10 81:7 124:7 133:13
applicant 12:14 39:17 40:6,6 78:17 94:11,16 95:8,25 96:15 98:3,10,15
applicant's 97:8
applicants 4:16 33:15 39:11 41:14,24 42:23 42:24 43:23 45:7 50:9,10 52:6 53:8,17 93:12 94:1 96:7 99:24
application 4:14,18 45:9 50:3 86:22 89:2 92:22
applied 145:13 146:19 147:8 147:12 163:22 163:22,24
apply 42:1 49:19 89:12,13 118:9 145:25 146:22 147:18

Pictiva EX2016
Samsung v Pictiva
IPR2024-01095

applying 162:18 163:12
appreciate 91:17 103:6
appropriate 39:12
approximately 62:22 134:7
april 4:19
area 17:8 101:13
areas 101:14,15
argued 98:3
arguing 77:4
argument 78:17 98:18
argumentative 76:7
arguments 97:8
arranged 145:9
art 12:16,19,21 13:7 14:12,18 30:3 31:13 35:3 39:18 80:2 97:14 100:22 102:9 116:5 124:15 147:16 150:7,8 150:13 151:19 154:24
articles 80:2
articulate 91:19
articulated 38:7
artist's 90:6
arts 138:16
aside 50:7
asked 8:24 9:7 28:2 76:8 103:19 121:23 122:3
asking 8:21 19:3 28:5 37:16 75:4,6 76:4,4 99:9 107:4,21 110:7 110:7 123:7 140:13,14 151:7
aspect 86:3 111:10 118:3,4
aspects 52:19 89:5 111:9
assembly 161:19,21
assert 45:8
asserted 11:17 13:7,16,25 60:17
assess 23:21
assistance 10:24
assisted 17:15
associated 24:15 46:12 140:11
assume 20:16 24:22 28:21 90:3 112:18
assuming 88:21 107:1,3
astray 37:6
at&t 16:6,24 17:4 18:6,11 18:13
atom 30:11,11 32:5,12 33:17 33:18 34:18 35:9 37:15,15 38:10,10 40:17 40:17,22,25 41:2,3,5,12,13 42:9,9,12,20,21 45:12 47:24
atomic 46:11 46:24 47:10
atoms 27:16,16 29:25 30:1,15 30:15,23,24 31:5,5,24,25 32:1,6,10,19,19 32:23,23 33:5 33:5 34:18,18 35:10,18 36:7 36:7,9,9 37:9,9 37:14,15 39:21 39:22 40:8,9 40:12,13,19 47:25 49:23,23
attached 7:17 49:4 50:14 67:6 80:17 86:20 94:5 105:7 113:6 135:16 161:11
attempting 89:13
attention 67:11 91:22 110:9,21 161:14
attorney 3:5,13 6:7
audio 5:12 126:2,4
author 10:7,11 10:18 12:13
authored 8:11 9:21 10:7
available 13:15 14:5 55:20 96:22
aware 15:2 51:24 97:19 126:20

b

b 171:1
back 27:1 29:22 48:15 61:8 66:23 67:10 97:18 100:12 102:6 104:17 126:6 126:15 137:10 155:15 163:8
background 15:15

backup 25:15 26:1,2,3,4 72:13
bad 85:16
bailey 3:12
baily 6:10,10 8:24 9:7,9 10:4 10:13,20 14:4 14:10,23 16:1 16:13 17:9,20 18:16 20:3 22:10,18 23:7 23:20 24:7 26:19 27:19 28:4 29:13 30:6,17,25 31:7 32:3,13 32:25 33:8,13 33:21 34:5,11 34:16,24 36:4 36:22 38:6,20 41:6,11 42:6 42:15 43:8,15 44:4 45:19 46:2,16 47:2 47:20 48:8 49:14 51:16,21 52:17 53:5,16 54:15,23 55:17 56:6 57:1,20 59:2,12,19 60:2 61:4 62:1 62:13 63:6 64:8,12,25 65:7,22 66:5 68:16,25 69:11 69:21 70:6,15 71:1,11,23 72:8,25 73:6 73:17 74:4,18 75:9,22 76:7 76:17 77:3,19 78:2,12 79:9 79:25 81:11,17 82:3,15,24 83:11,16,21 84:4,17 85:3 85:24 86:12 87:6,11,18,24 88:19,24 89:16 89:24 90:16 91:7 92:2 93:3 93:23 96:5 97:22 98:17 99:16 101:21 102:3,15,24 103:23 106:3 106:18,24 107:11 108:14 108:25 111:8 113:20 114:15 114:24 115:16 117:10 120:7 123:22 124:4 125:8,13 126:1 128:6 129:11 129:21 130:9 130:15 131:2 133:10 136:21 137:4 138:2,19 139:17 140:4 141:3,24 142:17 143:10 144:1,25 145:21 147:21 149:6,19 150:6 150:22 151:9 153:20 154:20 155:8 156:3,12 157:6,16 158:1 166:2,8,15,24 167:3
barkley 1:22 2:18 5:24 169:4,21
barrier 78:4,4 78:5,8 100:20 101:5
based 23:17 24:2 29:9 30:7 30:8 33:14,24 37:17 39:8,10 40:5 43:18 49:15,24 59:3 60:7,8 65:24 66:6 78:17 91:4 98:18 105:22,22 107:8 113:16 120:8 121:1 123:13 132:19 133:13,16 138:24 141:9 149:8,9,21 151:10,12,18 158:7 160:9 165:2,11,11,22
basically 63:9 136:1 148:12
beach 3:7
beam 17:15
beginning 2:16 6:6
behalf 2:15 6:9 6:11 7:3
belief 165:16
believe 7:1 39:25 96:18,21 122:10 166:9
bell 18:6
best 169:12
better 20:24 21:2,7 22:17 23:18 142:4
beyond 15:20 81:8,14
binary 43:3,6 43:12,17,19 44:10,12,17
bit 8:20 19:13 35:14,25 37:6 37:19 39:5,6 82:25 103:11 109:13
blue 134:4,16
bond 62:18,24 94:22 95:13
bonded 62:15 64:14,15,19,20

Pictiva EX2016
Samsung v Pictiva
IPR2024-01095

bonding 63:19
borders 111:14
boronson 94:21 95:12,19,25 96:20,23
bottom 11:22 50:25 69:22 70:13 71:10 74:12,13 77:10
boundary 82:25 92:4 132:12 134:1
box 161:1
break 26:16 48:5 67:1 103:4,11 104:1 104:10 125:23 126:8 155:5
breakdown 22:7
broader 59:4,8
built 17:14

c

ca 3:7 170:9,12 170:21
california 3:14 3:15 168:2 169:1
call 26:2 115:22
called 124:20
camera 5:9
canon 149:3
capacitor 158:15 163:23 164:3,20,24 165:2,8,12,17 165:19,21 166:7
capacitors 158:19 164:9 165:15
carbon 32:24 33:6 34:18 35:18 37:18 38:12 46:8 47:24
carbonate 46:1
career 16:9
careful 103:6
carrier 18:22 19:9,17,18,22 19:23,24,25 20:2,4,8,12,24 21:2,7,12,14,21 21:24 22:17 23:6,18,22,25 24:5 116:1,5,8 116:14,15,16 116:17,19,21 116:24 117:9 117:16 118:20 119:4,25 120:5 122:1,7,16
carson 3:4 4:5 6:8,8,19 7:14 7:18 9:3,9 10:10,16 11:1 14:7,19 15:8 16:10,17 17:17 17:22 18:19 20:7 22:12 23:4,16 24:1 24:12 26:16 27:4 28:1,7 29:17 30:12,20 31:2,10 32:8 32:20 33:2,10 33:19,23 34:8 34:13,22 35:2 35:19 36:12 37:4 38:1,15 38:23 41:8,16 42:10 43:1,11 43:20 44:8 45:24 46:6,19 47:15 48:5,18 49:1,5,21 50:12,15 51:17 51:23 53:1,9 53:19 54:18 55:13 56:1,18 57:17 58:8 59:5,15,24 60:10,23 61:7 62:4,16 63:14 64:9,22 65:4 65:17 66:1,12 67:1,7 68:20 69:5,17 70:1 70:11,20 71:7 71:14 72:2,12 73:3,7 74:1,8 75:2,14 76:2 76:14,22 77:6 77:14,22 78:9 78:14 79:13 80:4,14,18 81:13,20 82:9 82:18 83:9,13 83:19 84:1,5 84:19 85:9 86:6,17,21 87:8,15,21 88:16,20 89:10 89:20 90:11 91:1,21 92:17 93:4 94:2,6 96:12 98:1 99:4,22 101:16 101:24 102:12 102:21 103:2 104:5,20 105:3 105:8 106:7,20 107:2,13 108:20 109:5 110:5 111:18 113:3,7,24 114:22 115:13 115:24 118:17 120:11 121:10 124:1,8 125:9 125:21 126:18 128:10 129:13 130:2,11,18 131:7 133:21 135:12,19 136:23 137:6 138:8 139:1,24 140:12 141:18

Pictiva EX2016
Samsung v Pictiva
IPR2024-01095

142:9,18 143:22 144:14 145:4 146:10 149:1,12,22 150:17,24 151:21 154:14 154:21 155:5 155:18 156:7 156:23 157:12 157:23 158:4 161:9,12 166:3 166:12,22 167:2,4 170:1
case 5:20 7:8 7:13,23 11:15 11:22 13:10 14:22 39:4 78:6 83:1 92:8 105:3
cases 92:4
cathode 138:7 139:11 140:11 143:14,19,21 144:21
cathodes 137:18 138:1
causal 54:10,11
causation 54:20,21
cause 75:4 120:5
caused 54:14 54:17,17 55:16 55:19,20
causes 159:19 159:20
ccp 170:9,12
center 3:6
central 45:12
certain 29:4 30:9 102:5 116:18,20 148:24
certainly 28:13 113:13 142:24
certified 2:18
certify 169:5,13
chain 61:12,14 61:25 62:3 63:3,16 64:4 64:10,18,21,24 65:9,15,19
chance 161:13
change 119:24 120:6 148:17 158:10,11,12 159:20,20 160:8,13
changed 102:2 102:14
changes 158:8
characterizati... 103:24 163:16
characterize 65:1,2
charge 114:6,9 116:1,5,8,13,15 116:16,17,23 117:9,15 118:20 119:25 120:5 121:2,25 122:7,16
check 60:18 166:25
chemical 28:13 29:15 43:7,12 46:4,10,11,23 47:10 50:4 62:24
chemically 17:14
chemistry 15:25 16:3,8 16:12,15,16,18 16:20,22 17:1 17:8,13,16,19 28:24 43:10,18
chloride 31:9 31:12,16
chlorine 31:17
choice 115:11 144:11
chosen 148:8
chronological 13:18,20,23,24
circle 114:21
circles 114:16
circular 114:21
circumstances 71:25 154:12
citation 143:3
cite 120:12 121:12
cited 11:19 121:22
civil 1:10 2:7 170:19,21
claim 6:24 11:16,18,19 12:15 14:13,21 41:21 50:6,7 52:1 54:9 56:21,25 59:9 59:16,20,25 60:7,7,11 61:23 67:11,13 68:18 69:2 71:5 72:4 73:5 73:14,23 77:13 86:15 95:20 105:18,18,23 106:1,8 107:4 107:9,9,14,15 107:21,21,24 108:3,4 109:14 109:24 110:7 116:9 117:13 117:15,15,19 117:25 118:25 122:9,11,23,25 123:2,5,5,5,7,7 123:9,10,14,14 123:15,15,16 123:17,17 124:2,5,6,6,7,7 124:7,10,11,16 124:16,18,20 124:21,21,22

Pictiva EX2016
Samsung v Pictiva
IPR2024-01095

124:22,23,25 125:3,4,10,15 125:17,18,20 127:4 129:3 133:15 134:17 137:2 139:23 140:14 144:22 149:3 152:21 152:22,25 161:6,15,18 162:8 163:20 164:10,12,13 164:15,22 165:1,2,7,10,17 165:23,25 166:5,6,11
claimed 45:8 59:8 85:8
claims 53:10 59:4 60:15,17 60:21 61:1,1,5 61:9 67:10 105:10,12,15 105:17 106:15 106:21 114:4 118:11 119:6 146:12,15 149:3 153:4
clarification 56:22 88:6
clarify 82:4 125:9
clear 9:4 39:11 39:13 68:13 84:9 86:7 119:7,14 131:21 132:20 132:21 142:24 144:15 153:10
clearer 133:1
clearly 164:3
closely 75:3
closer 52:23 91:18
cloud 25:10,12 25:23,24 26:4 26:15
code 170:9,12 170:19,21
coextensive 135:25
collaboration 8:2 10:6,9
collection 114:5
collectively 73:20,20 75:24
column 58:9 100:13 102:18 110:9,11,16,21 110:23 111:4 137:14,21 139:13,20 140:20 143:7 145:5 146:17 147:5,6,16 149:18 152:24 153:1
columns 138:16
come 75:24 80:20 140:8 142:2 146:7 157:18 165:8
comes 29:20 94:10
common 149:2
communicated 10:22
communicates 12:14
company 5:18 122:4
compare 20:13 21:12 101:25 117:8,24 118:25 119:8
compared 22:15 23:14
comparing 117:22
comparison 23:17
competing 153:18
completed 13:8 14:12 170:7,17 171:6
completely 12:10,12 92:6 112:17
completes 167:5
completion 171:10
complex 27:10 27:13,15,18 28:3,13,15,17 28:19,21,23,24 28:25 29:6,10 29:12,15,20,24 30:4,16,18,24 31:9,13,23 32:1,4,6,11,17 33:11,16 34:15 34:17,20,21 41:4,14 42:11 44:3 45:11 49:13 51:11,18 51:19 52:1,16 53:4,14,21 54:2,4 56:8 58:14 61:20 63:4,5,8,9 64:2 64:14,16,19,20 65:11,12,13 89:3
complexes 29:18 31:21 34:4,9 40:7 41:10 48:21 50:5 61:17,24 62:11 63:25
complexity 89:9
comply 9:13
component 154:16 155:22 155:23 156:9 156:10 157:4,5

157:11,19,22 158:15,23,25 158:25 159:12 159:14 160:3,4 160:7,16,18,19 160:20,21,25 162:1,4,4,9,10 162:12,13,15 162:16,20,23 162:24 163:2 163:15,25 164:2,4,7,8,16 164:19,20,24 165:4,15,25 166:4
components 26:10 28:23 64:5,11 134:16 153:18 156:25 156:25 157:15 158:19 161:22 161:22 166:10
composed 27:15 29:24 30:10,14,22 31:4,24 32:10 32:18 33:17 39:20 40:8,16 41:2 42:8,20 43:6 46:7 107:19 108:6,8 108:17 145:12
compound 27:15 28:14 29:11,24 31:24 32:10,18,22 33:4,16 35:7,8 35:9,16 36:10 36:25 38:3,9 38:17 39:20 40:7,22,25 41:2,13,19 42:2,5,13,13,18 42:19,19,21,22 43:3,6,12 44:12,17 45:13 45:17 46:18 47:7 49:11,12 49:16,20,22,25 50:9,10 53:7 53:18,21 54:1 54:4 56:8 58:15 61:18,25 62:12 63:4,5,8 63:25 64:15,15 64:19,21 65:12 65:13,13
compounds 30:9,10,13,22 31:3,20 35:6,6 35:13,23,24 36:2,6 37:3,10 37:11,13,17,17 37:23,24 38:12 40:12,13,16,19 41:15,18 42:8 42:22 43:17,18 43:19 44:10 45:21,22 54:25 55:4,5,7,11,22 56:15 57:8,15 58:1,4,16,25 60:4 61:19 62:12,15,19,23 63:13,19,20 64:1
comprise 147:11
comprises 45:12 106:13 127:11 162:5
comprising 129:16 145:11 163:2
computer 11:11 15:16,18 25:10,13,21,22 25:23 26:2,5 26:10,15
computers 25:15 26:7
computing 25:11 26:1
concede 32:11
concentrations 120:22,24
concept 60:11 62:25
concerned 18:21 19:8
conclude 23:18
conclusion 20:17,18 39:9 75:25 142:2 146:7 165:8
condition 86:1 86:2
conditions 41:23 86:1
conducted 5:8 5:21 120:10
conducting 51:9
conductive 144:9 162:5,6 163:3,8
confidential 1:1 166:16,21
configuration 41:23 64:17 99:19
configurations 64:14 65:10,15 65:20 66:3,6,8 66:8,9
configured 127:13 129:17
confirm 99:9 105:9,12 161:3
conformal 88:5 88:7 90:20 91:13
conformality 88:2
conforming 86:13
confused 124:18
conjunction 24:18 105:13

Pictiva EX2016
Samsung v Pictiva
IPR2024-01095

106:5
connect 147:11
connection 5:10 62:24 97:8 113:11 127:3
connects 19:23
connotes 54:10
consider 15:1 36:20,23 46:14 83:5 156:1 157:4,21 160:2
considered 38:3 39:5 73:19,20 92:14 113:18 115:15 157:14 159:13
considering 74:7 75:18
consistent 146:1 147:24 148:3
consistently 145:25
consists 36:2 37:14
constitute 34:20,21 63:16 79:24
constitutes 88:12
construction 6:24 8:9 11:16 11:20 14:13,21 27:14 29:22,23 30:2,4,7,8,13 30:21,24 31:3 31:6,23 32:9 32:15,17,21 33:3 34:15,19 39:10,12 41:21 49:19 50:6,8 51:18 52:1 53:24 54:20,25 56:2,7,25 59:25 60:3 61:13,22 62:10 63:23,24 64:7 65:5,8,11,21,23 66:2,4 68:21 69:9 70:24 72:22 78:1,11 85:10,22 86:11 89:12,13,15 96:25 105:23 107:1,3 122:9 122:12 127:4 129:10,20 130:8,14 131:1 131:6,8 132:8 132:11,17,21 133:12,13 134:9,14,21 135:6 136:24 139:2,7,12,23 140:25 141:21 142:21 145:3 148:8 149:3,7 149:13,24 150:12 151:8 152:4,8 154:16 156:8,16,22 158:14 160:15 160:25 164:22 165:14
constructions 11:18 67:18 104:22 113:17 153:18 155:21 155:25
construe 140:18 151:1
construed 59:10,17 68:6 68:11 127:22 128:1 152:9 164:19
consulting 18:12,14,18
contact 69:15 70:10,12,18 71:5,9,13 73:12,22 74:6 74:12,25 75:5 75:7,10,25 76:13,20 77:1 77:12,21 170:9 170:20
contain 40:12 40:13,19 41:18 44:14 48:21 114:17 169:10
container 55:7
containers 57:4
containing 42:13 115:5
contains 33:20 38:19 40:22,25 42:2 49:22 59:16
contemplated 62:19 63:20 69:2
contemplates 58:23 109:8
content 8:18 9:20,22 142:5
contention 149:9
contentions 13:4
contents 8:17
context 27:21 28:6,11,22 29:5,23 34:6 35:1,13,23,24 36:2 37:10,11 37:13,16,23 45:21 50:5 52:14,18,22 53:3,14 57:22 85:1 96:19 112:15,17,21 116:7,12,25 156:5 157:1,3 157:13 160:4
contexts 52:9
continue 5:13

Pictiva EX2016
Samsung v Pictiva
IPR2024-01095

continuous 112:6,7,8,11 114:13,19 115:18
continuously 112:13
contradicting 98:9,14
contrast 45:7
convert 156:11 157:25 158:6 159:4
converted 157:9 159:17 159:18
converting 136:24 156:18
converts 156:14 157:20 160:20
convey 77:7
conveyed 10:23 147:1
conveys 58:1 142:15
coordinate 50:1 55:11,23 56:17 57:13
coordinated 63:8
coordinates 53:21 54:2
coordination 55:4 56:3,19 56:23 57:6,16 58:23 60:4 61:2,10
copies 25:7
copy 7:22 11:2 25:19,21,25 67:3 79:20 105:4
corners 87:23
correct 15:22 15:23 16:19 17:6 19:21 27:12 28:8 31:18,19 32:2 32:5,7,12 33:22 34:10 39:4 40:19,22 40:23 41:5,7 41:18 43:14,24 44:3,10,22,23 44:25 45:1,18 46:1 49:13,23 51:14,20 53:4 53:15,17 55:16 59:11,18 60:1 62:3 65:6,21 67:15,16,19 68:15 69:20 70:5,14 71:10 72:7 73:16 74:17 78:13,20 79:2,15,19 80:11,20,23 81:2,4,6,10,16 81:21 84:3,16 84:21 85:2,14 85:23 86:11 94:10 97:2,10 98:10 99:15 100:8,9 101:10 101:20 102:2 102:14 104:23 105:1,2,15,21 106:2,4,9,10 107:22,23 108:1,13,24 109:23 110:14 110:19 111:1,7 112:2,24 116:2 116:3 120:2 122:25 125:2,7 125:12 127:2 127:20,24 129:2 134:6,9 134:10,14,15 136:20 137:13 137:15,16,19 137:23 138:1 138:11 139:3,5 139:8,16 140:23 142:12 142:22 143:2,9 146:20,21,24 149:7 152:5,15 155:23 156:11 158:16,17,20 161:7,8,19,20 161:23,24 162:1,6,10,24 163:15 164:10 164:11,14,16 164:17,21,25 168:3
corrections 170:14,15 171:3,4
corresponds 152:12
counsel 6:5 8:2 8:7,10,13,15,16 8:23 9:18,22 9:25 10:2,6,9 10:22,22,23,24 26:17 48:6 103:9 125:24 155:6 169:13 170:18,22 171:7
count 84:25 85:22
county 169:2
couple 144:15
court 1:3 2:1 5:19,24 7:17 49:4 50:14 67:6 80:17 86:20 94:5 103:15 105:7 113:6 135:16 161:11
cover 98:21
covers 134:5,13 134:19
create 98:16 99:12

Pictiva EX2016
Samsung v Pictiva
IPR2024-01095

created 32:15
criteria 154:23
critical 14:21
crucible 55:7
csr 1:23 169:4 169:21
curing 81:6
current 25:22 143:16,18 158:11,11,12 159:19,19,21 159:22
currently 25:13 25:22 47:4
cv 1:11 2:7 5:20

d

d 4:1 109:17
date 170:16 171:5
dates 13:25
day 169:18
december 1:19 2:17 5:1,6 169:18 170:3
decision 15:11 15:13
decisions 15:10
declaration 4:9 7:7,11,22,25 8:1,6,15,22 9:6 9:18,21 10:14 11:2,20 13:10 13:13 14:3,9 14:14 18:3 27:6,9 39:15 40:2 43:21 44:10 53:23 68:8 78:24 84:3 92:19 98:9,14 99:13 99:14,21,23 100:9,11 113:11 116:22
declare 168:1
defects 84:24 85:4,5,12,19 86:2,9 89:19 93:1,15,17 96:3,11 98:22
defendants 1:14 2:11 6:11
defines 108:16
definitely 103:25 104:7
definition 42:11 43:2 49:13
degree 16:20
degrees 15:21 16:18 17:18
delay 103:25
delays 103:7,19
demarcate 162:23
demarcates 162:9,19
department 16:3,22 17:2
depend 20:5,19 21:18 29:3,9 71:24,25 120:20
dependence 19:16
dependent 117:1
depends 5:9 28:10 29:2 57:21 117:5 120:21
depicted 78:24 80:23 81:10,16 138:10
deposit 71:21
deposited 23:13 67:24 68:2 71:20 72:6,15,20 73:11,21 77:10 79:11 95:20 100:21 101:12
depositing 67:14,21 78:16
deposition 1:17 2:14 5:7,16,21 17:12 66:19 101:13 167:6 169:6 170:19 170:23,25 171:8,10
depositions 90:20
deposits 92:12
describe 81:24 110:23 165:25
described 35:17 94:11 102:18 118:6 124:15 139:13 139:20 147:4,5 147:15 148:10 149:17 163:14 163:20 165:1,7 165:23 166:11
describes 88:18 91:10 108:11 108:22 111:4 111:23,25 137:14,21 139:25 143:8 144:6 146:14 147:6
describing 100:14,18 101:4 140:21 145:6 150:25 164:23
description 4:8 138:9 140:5 148:13,15 151:10
design 143:24 153:24 154:4
designate 166:18
designed 154:18
despite 165:14
detail 89:8 90:2 90:18

Pictiva EX2016
Samsung v Pictiva
IPR2024-01095

detailed 99:2 165:18,20,21
details 19:20 24:8,21
detect 157:19 158:13
detected 156:10
detection 159:8
detector 156:13 156:15 160:10
detectors 156:21
detects 157:24
determination 114:1
determine 20:23 21:1,6 21:13,25 22:16 24:4 90:15 117:8 118:10 118:15 121:25 122:7 154:24 160:17
determined 118:7 170:18 170:23 171:7
device 19:16 68:14,23,24 69:8,20 70:4 72:5 78:5,7 106:12 122:25 123:3,9,12,20 123:21 124:3,3 124:15,20,21 124:24 125:1,7 125:11,11,16 125:19 139:14 140:1 143:17 143:18,24 144:16,20,22 150:8,9 151:19 154:15 158:3 159:7
devices 67:15 67:24 68:3,6 68:10,11,18 69:4,10,16,24 70:10,13,18,25 71:5,10,13 72:16,23 73:12 73:16,22 74:3 74:6,9,12,15 75:1,7,11,21 76:1,6,12,13,16 76:21 77:2,12 77:18 78:1,11 78:17 81:9,15 82:23 95:20 100:24 122:2 144:18,23 150:13,14
diagram 51:14 87:23 89:23 113:18
dielectric 162:18,19 163:12,21
difference 57:18 96:8,13 123:19 135:20 153:15
differences 96:8,15
different 8:20 12:6 20:6 21:12 23:14 34:10 36:10 37:2,3 43:13 50:4 52:8 58:23 101:5,8 104:22 108:18 112:19 136:3 147:2 148:4,22
differentiation 60:12
difficult 117:24
diode 109:17 163:25
diodes 17:25 18:1
direct 45:7 75:7 76:13 161:14
direction 169:9
directly 68:11 68:17,24 69:3 69:9,15,19 70:9,12,18,24 71:4,9,13 73:11,15,21 74:2 75:1 76:1 76:10,11,13,16 76:20 77:11,20 78:7,7,16 82:6 82:8,14,22
disagree 103:24 132:18
disclaim 40:12 41:17 42:4
disclaimed 41:14 42:23 53:7,18 78:18
disclaimer 34:3 40:18,21,24 41:1 42:1,4,7 42:14 52:6 92:25
disclaims 40:6
disclose 102:17 115:5 123:6 153:4,5
disclosed 34:1 48:20 62:25 65:10 79:8,15 79:18 89:5 107:17 111:16 119:13 121:6 144:13 149:5 152:24 153:2 165:9,12
discloses 79:1,4 79:4 98:21 124:18,19,22 124:25 125:15 140:15 144:4
disclosing 44:2 135:17 145:19 165:17
disclosure 44:1 99:2 138:22,24

145:22,25 146:2 147:1 148:5,18,24 151:12 153:10
disclosures 91:12 148:23
discuss 18:5 99:24
discussed 12:22 81:1 97:10 109:7 166:17
discusses 110:12,17 146:18
discussion 99:21
discussions 113:15
display 79:2,4 79:5
displays 1:8 2:5 5:17 17:25 170:4
dispute 31:25 43:2,5 56:19 56:23 99:10 124:14 164:6
disputing 98:9 98:14 139:25
distance 120:21 121:1,2
distinct 105:1
distinction 136:13
distinguished 78:19 93:20 95:25 99:25
distinguishing 43:23 97:9
distributed 110:25 111:6 111:22 112:1
district 1:3,4 2:1,2 5:19,19 9:11
division 1:5 2:3 5:20 16:6,24 17:3,4
document 24:13 25:2
documents 11:5,7,10,13,19 15:6,12 26:15 27:23 39:9 122:5,15,19,20
doing 19:14 20:1 47:1 103:3 148:12
dopant 51:11 114:23 115:1,4 115:10,14 120:1
dr 5:16
draft 8:22 10:19
drafted 8:13 9:18 10:12
drafter 9:6
draw 67:11 83:3
drawn 90:23
drink 125:23
drive 3:6
drives 25:16 26:7
dropped 126:2
due 53:21 54:9 54:11 59:21 60:8
dust 89:19 96:11

e

e 4:1 5:16 62:20 109:17 170:9 170:12 171:1
e.g. 100:22
earlier 36:5 152:18
early 18:9
easier 92:7
easily 90:10
eastern 1:4 2:2 5:19 9:10
eight 16:5,23 62:22
either 23:11 37:12 46:10 58:24 76:24 82:10,14,22 126:7 147:25 148:1 149:16
electric 19:24 116:16,18,20 155:22
electrical 15:15 15:18,20,22 143:16,18 156:14,18,19 157:8,9,21 159:4,9,17,22 159:23,23,24 159:25 160:8 160:12,21
electrode 136:10 137:12 137:15,16,19 137:22 138:3 138:11,12,17 138:25 139:15 140:2,9,22,25 141:6,11,13,16 142:2,5,7,11,21 143:6,8,15 144:5,7 145:9 145:14,19,23 146:19,23,23 147:7,9,12,18 147:20 148:13 148:15 149:10
electrodes 135:8 137:1,15 137:22 138:5 138:14,18,23 139:3,8,10,19 139:21 140:8 140:19 141:9 142:15,21,24 143:1,5,13,24

Pictiva EX2016
Samsung v Pictiva
IPR2024-01095

144:17,21,24 146:5,8 147:25 149:14,25 150:1,10,13,20 151:2,3,11,13 151:16,20,22 152:1,3
electromagne... 127:14 129:8 129:18 133:18 135:1 140:16 152:9,13 156:10 158:24 159:3,13 160:3 160:17
electron 51:8,9 109:3,21,22 117:21 118:23 119:11,21 152:6
electronic 23:2 45:9 122:24 123:3,9,12 125:16 156:9 157:15 158:14 158:18 160:19 160:25 162:1,3 162:4,13,16,24 163:1,14 164:16,18,19 164:24 165:4 165:15,24 166:4
electronically 162:5,6 163:2 163:8
electronics 1:12,13 2:8,9 5:18 170:4
electrons 117:20 119:4 119:19 120:19
element 43:3,7 43:7,18 47:22 106:1,11 138:22,23 144:23 163:6 163:11
elements 28:25 29:11,16,19 31:16 32:24 33:6,20 34:10 35:21 43:13 44:16,19,19,21 67:13
emanuel 3:11 6:10 7:2
embodiment 100:20 108:11 110:12,17,24 111:24 139:13 139:20 140:1 140:21 143:5 145:8,19 146:14 147:4,5 147:6,15 149:8 149:17 163:19
embodiments 108:23 110:8 111:5,25 139:22 149:4
emission 108:4 108:5,6,10 109:10,11,12 109:14,16,23 110:1,4 119:18 119:18,21 132:9
emit 132:22,24 132:25 133:17 152:9
emits 131:4 134:25 135:23 135:24 136:17 136:17 140:16
emitted 134:3 152:13
emitting 17:25 18:1 49:16,25 50:1 109:17 111:13,15 117:18,19 118:1 119:2,3 119:7,12,13 127:12 129:17 131:3 132:22 132:24,25 133:17 134:3 135:22 136:8 150:9
employment 18:13
enabled 74:5
encapsulation 94:22 95:13
enclosed 114:5
enclosure 94:22 95:13
encompass 67:23 68:1 149:4
encompasses 129:5
encompassing 165:15
encourage 103:10
ends 132:25 152:20
energy 156:11 156:14,15,18 156:19,19 157:8,8,9,19,20 157:21,24 158:6,8 159:6 159:17,17,25 160:20,21
engineering 15:16,18,20,22
enhance 19:18 20:2 23:6
enhancement 18:22 19:9
enter 55:23
entire 133:20 133:23 134:2 152:12 153:14
entirely 123:4
entirety 11:24 12:1,3 14:16

14:18 15:7 32:16 50:24 80:6,12 113:13 125:17 167:1
environment 117:1
environmental 120:1
envision 90:22 143:15 160:23
envisioned 65:16 90:23 93:19
envisioning 62:25 158:3 160:7
equally 132:5 132:10
equation 46:4 118:6,6,7,8,10 118:12,14 121:6
equipment 26:5,12
eric 6:22
errata 170:14 170:16 171:3,5
esq 170:1
essentially 107:18 127:21
established 119:9
etching 17:15
etl 118:24
evaluate 91:3 154:15
evaporation 55:2,10 56:4,5 56:14
evidence 161:5
exactly 40:1
examination 4:5 6:17
examined 6:14
examiner 44:2 44:6,7 97:20
example 9:24 17:14 20:20 31:8 34:14 35:11 36:8 37:7 38:2 54:16 55:2,10 55:18 62:14 70:19 73:1,8 76:21 88:14 92:5 111:14 115:4 133:14 134:4 136:6 146:4 152:24 155:1 158:21
examples 29:18 35:20 48:21 114:2,3 155:1 155:4 158:15
except 143:7
exception 140:10
exclude 29:1,14 32:21 33:4 37:22 50:8 51:19 56:2 62:10 65:5 114:10 121:16 139:12 143:4 149:8,13 150:1 156:9
excluded 30:9 30:10 34:19 40:16 41:20,20 41:24 42:14 49:12,20 92:15 139:23 140:24 152:3
excludes 166:10
excluding 41:10
exclusion 41:20 149:20 150:15 151:17
exclusive 157:1
exclusively 9:25
executed 168:4
exhibit 4:9,10 4:11,12,13,14 4:16,17,18,20 4:21 7:14,15 7:16 11:11 49:1,3 50:12 50:13 67:2,3,5 80:15,16 86:18 86:19,22 94:3 94:4 105:4,6 113:4,5,8 135:12,13,15 161:9,10
exhibits 4:7 67:2
exist 37:23 108:18 122:21 141:12 142:3 143:6 149:11
existing 141:16
experience 17:19 18:6,8 120:9
experimental 120:10
expert 6:23 15:24 16:11,16 18:15,18 82:21 87:20 91:14,15 91:25
expertise 16:14
explain 163:17
exposed 16:7
express 21:15 22:19 83:22,23 88:13 91:19
expressed 22:24 84:2 88:8 114:20 121:6
extended 90:4
extent 97:17 148:6 161:2
eyeglasses 155:3

f

fabricated 23:9 23:14,15
fabrication 20:22
face 123:11
fact 92:15 99:24 112:12 121:6 159:16
factors 117:6 120:1
facts 96:1,2 149:8
fair 31:21 68:22 115:25 141:13 161:8
fairness 141:16
fall 73:13
familiar 9:10 60:11 86:25
familiarity 123:24
family 127:6
fashion 102:20 162:18 163:13
feature 81:18 81:19,22,23 83:2,4,7,7 92:12 102:20 119:17 141:14 141:15 143:13 150:11
features 114:21 114:21 124:12 125:19 144:6 145:2 150:11
federal 171:1,8 171:9
feel 103:15
field 16:15 17:24 19:24 28:9,10,24 43:17 116:16 116:18,20 120:9 122:12
figure 49:9,12 49:16 77:15 79:22,24 81:22 82:1,12,17,21 87:2 90:21 91:2,5,10,23,25 101:6,6,9,18,25 102:7 113:14 113:15 114:7,7 114:13 119:15 119:15 136:7 137:10,11 138:4,4,22 141:2,6,9,12 142:5 143:8 144:4 145:23 146:4,14,25 147:3,4 150:25 151:12 163:19 163:19 164:5
figures 78:22 79:7,10 80:20 100:14 101:3,4 102:17 136:4 137:17,25
file 11:17,25 12:1,3,5,9,17 12:20 97:5
filed 5:18 13:21 14:2
film 19:12 23:10
final 92:23
financially 6:2
find 12:17 42:18,19 50:19 91:20 93:9 101:14,15 148:7 150:13 150:14
fine 103:3 126:5 140:6 148:2
finished 36:15 36:19 77:23
firm 5:25 7:2
first 8:22 18:10 27:10 51:5 68:5 70:4 72:20,24 75:12 76:10,11,19 94:16 95:3 99:10 105:19 105:24 109:4 117:16,17 118:3,9 119:1 125:14 127:8 134:24 135:1,5 135:6 140:16 145:8,14,19 146:19,22 147:7,8 152:10 152:23 161:25 162:6
five 25:18 26:13
flag 104:6
flat 92:6 97:21 98:5,16 99:12 100:5
flatter 83:20 84:14,23 86:8 92:9
floor 3:14
flow 158:11,11 158:12 159:21
flows 143:17,18
fluorescent 79:2
focus 82:20 110:5
focused 96:17
folder 7:15 49:2 67:2 135:13
follow 65:23 79:21 139:18 146:2,6 147:22 147:23
followed 148:23 151:14
following 22:20 74:11 141:5 142:4,5 144:12

Pictiva EX2016
Samsung v Pictiva
IPR2024-01095

follows 6:15 170:8
followups 144:15
foreclose 113:22
foregoing 168:2 169:6,10
form 9:12 10:4 10:13,20 14:4 14:10,23 16:1 16:13 17:9,20 18:16 20:3 22:10,18 23:7 23:12,20 24:7 27:19 28:4 29:13 30:6,17 30:25 31:7 32:3,13,25 33:8,13,21 34:5,11,16,24 36:4,22 38:6 38:20 41:6,11 42:6,15 43:8 43:15 44:4 45:19 46:2,16 47:2,20 49:14 51:16,21 52:17 53:5,16 54:15 54:23 55:17 56:6 57:1,20 59:2,12,19 60:2 61:4 62:1 62:13,23 63:6 64:8,12,25 65:7,22 66:5 68:16,25 69:11 69:21 70:6,15 71:1,11,23 72:8,25 73:6 73:17 74:4,18 75:9,22 76:7 77:19 78:2,12 79:9,25 81:11 81:17 82:3,15 82:24 83:16,21 84:4,17 85:3 85:24 86:12 87:6,11,18,24 88:19,24 89:16 89:24 90:16 91:7 92:2 93:3 93:23 96:5 97:22 98:17 99:16 101:21 102:3,15 106:3 106:18,24 107:11 108:14 108:25 111:8 113:20 114:15 114:24 115:16 117:10 120:7 123:22 124:4 125:8,13 128:6 129:11,21 130:9,15 131:2 133:10 136:21 137:4 138:2,19 139:17 140:4 141:3,24 143:10 144:1 144:25 145:21 147:21 149:6 149:19 150:6 151:9 153:20 154:20 156:3 156:12 157:6 157:16 158:1 166:2,8
formal 103:9
formed 11:15 14:3 28:16,20 48:2 51:9 52:1 60:14 88:8
forming 13:13 39:4 50:22 79:1 127:3 161:25 162:3
forms 23:13 115:14
formula 46:11 46:23 47:10
forth 169:8
found 12:19 24:22 120:16 141:21
four 16:3,21
fourth 69:8
fraction 153:12
framework 43:9
francisco 3:15
frank 5:16
frcp 171:1
fred 1:17 2:14 4:3 6:13,22 8:25 170:5
frequency 118:13,16
front 11:22 46:4,12 47:10 97:18
fujii 4:13 78:19 78:23 79:1,3,8 79:15,18,20 80:5,12,15 81:5,14
full 50:2 51:5 79:7 104:7 128:2,11,25 131:9,9,15 133:2 134:20 153:8 169:11
fully 147:23 154:11
function 108:3 108:9 109:11 143:16
functional 106:9,12,13,17 106:23 107:5,7 108:1 109:6,9 109:19,25 110:3,13,18,25 111:6 145:12 147:10,13 150:4
fundamental 148:21

further 38:13 39:1 47:1 90:4 152:25 158:12 162:8 166:13 169:13

g

g 62:20 114:8
gap 121:4
gas 54:3 57:9 58:17,25 59:11 59:17,23 60:1 60:5,16,19 61:3,10
gazette 4:19
general 29:7,8 29:9 34:25 45:21 57:10 99:18
generally 12:13 19:4 24:9 35:4 85:25 96:6,17 159:24
generate 127:13 129:18
generates 129:7
gentlemen 76:23
geometrical 21:19,20
getting 153:25
give 29:18 34:14 47:5 89:4 91:8 118:13,15 133:11 155:1,3
given 25:4 41:21 42:11 88:10 104:8 114:3 129:3
gives 114:2 118:13,16
glass 154:2 155:2
glasses 155:2
go 5:14 8:24 26:17 36:10 48:6 50:25 66:10 82:17 97:4 100:12 102:5,16,17 107:16 118:5 125:14,24 126:2,8 131:16 136:6 152:25 153:1 154:9,11 155:6 163:18 167:4
goal 19:18
goes 83:3 130:7 130:13,25 132:9
going 26:21 29:22 36:17 42:24 48:10 55:13 61:8 66:14 103:13 104:12 125:21 126:10 137:8 137:10 154:5 155:10 166:18 167:6
good 5:5 22:2 39:12 91:8
gotten 13:18 104:8
great 121:5
greater 89:7 90:2,18 115:6
green 134:15
grounds 96:1
group 47:25 69:2,13,14 70:3,8,17,18,21 70:24 71:3,4,8 71:12,15,22 73:21 74:2,23 74:25 75:5,11 75:17 76:4
grown 23:13
guess 27:22 47:19,21 130:5 140:20
guidance 146:3

h

hand 39:6 89:9 163:23 164:1,3 164:5
handled 170:8
happen 55:4
happened 18:13 104:3
happens 54:14 55:18 58:6
happy 77:7 121:20
hard 25:16 26:7
head 38:22 61:11 96:23 97:15
hear 9:15 20:25 31:1 33:1 40:20 46:17,21 62:8 79:16 81:12 85:15 87:7 98:11 101:22 106:19 111:3 130:10 137:20 166:14
heard 5:11 15:11 60:13 87:12 103:2 126:24 130:16
helpful 99:2
hereto 7:17 49:4 50:14 67:6 80:17 86:20 94:5 105:7 113:6 135:16 161:11
hesitate 88:13 89:4
high 116:19,19
higher 21:10,13 21:24 24:4,10 81:23,24,25 83:6,7 117:9

Pictiva EX2016
Samsung v Pictiva
IPR2024-01095

highly 116:25
histories 11:17 11:25 12:1,4,5 12:9,17
history 12:20 27:22,24 33:25 34:3 43:24 45:4 78:20 81:2 97:5 122:11
hold 15:24 16:11
holds 154:7
hole 109:2,20 109:20 117:21 118:21 119:11 119:21 152:5
holes 117:21 119:5,19 120:20
home 18:25
hope 103:18
hour 66:17
hours 7:12,13 104:7
htl 118:22
hydrogen 32:24 33:7 34:18 46:8 47:25
hydroxide 36:11,13,18,19 36:20,24,24,25 37:2 48:1

i

identification 7:16 49:3 50:13 67:5 80:16 86:19 94:4 105:6 107:16 113:5 135:15 161:10
identified 44:9 50:6 66:4 96:7 96:13,15 97:20 108:4 109:11 109:25 142:10
identifies 110:3
identify 34:2 35:20 37:7 38:2,16 64:6 65:20 93:10 119:24 154:22
ikeda 43:22 44:1
illuminated 158:9
image 79:22 113:9
images 92:3 138:13
impact 166:5
impeding 153:23
imperfections 98:21
impinging 159:7
implies 59:22 135:22
imply 83:18
impossible 117:24
inaudible 154:8
include 13:7 30:19,22 31:4 31:20 32:1,4,6 33:12 34:4 35:21 37:18 38:12 44:18 45:23 47:4 53:11 63:3 64:10 79:23 98:8,13 106:12 114:18 115:4 131:14 133:19 133:23 137:18 137:25 164:24 165:3
included 17:13 60:19 106:16 106:22 107:5 107:25 131:12 141:10,17,22 147:20 149:14 149:15 150:5 156:15,22 170:14 171:3
includes 26:6,7 28:14 34:17 35:9 36:25 37:8 38:4 41:12,19 42:12 44:16,20,24 59:20 75:11,12 112:12,16,23 114:6,8 115:2 124:11,13,24 128:2,11,19 133:2 136:10 137:19 138:23 138:25 141:13 151:13
including 9:21 19:16 20:12 21:20 25:3 27:22 39:6 76:19 125:18 143:8
inconsistency 148:7,9
inconsistent 148:4,17
incorporated 123:5,14 125:5 125:20
incorporates 123:16 124:6
incorporating 124:23
incorporation 125:18
indefinite 116:2,24 122:25 164:10
independent 53:2,11,13

indicate 54:20 54:21
indicated 111:2
indicates 54:11 54:25 55:22 56:7 102:11
indirectly 68:14 70:3 78:19 82:8,14 82:22
indium 44:20 44:22
induction 109:20
inductor 158:21 165:3,4 165:6,13,21,23
inductors 158:22
industry 16:4
inevitably 17:12,16
influence 121:5
information 47:13 90:9 91:6 103:21 113:25 147:1 160:6,14,16,22 166:16,21
infrared 127:15,23 128:3,12,14,15 128:16,21 129:4,23 130:22 131:10 131:11,12,15 131:17 133:3,6
inherent 117:5 143:13
inherently 144:23
initially 56:9 58:5 113:21
injection 109:22
inorganic 35:6 35:7,7,23 36:2 36:6 37:11,13 38:18 43:9,17
inquired 122:22
institute 16:22 17:2 19:1
institution 18:25
instrument 156:20
instruments 22:14 23:3
intend 47:3 136:2 154:11
intended 32:21 33:3 50:1 56:2 62:10 85:6
intending 136:12 137:2
intensity 154:3 159:20
intent 103:25 154:18
intention 71:25 153:22
intentional 103:18
inter 4:11 13:6
interact 58:16
interest 23:1
interested 6:2 22:22,23 169:15
intermediate 109:21
international 1:9 2:5 5:17 170:4
internet 5:9
interpret 57:22
interpretation 60:8 61:23 165:3
interpreted 115:17 135:6 149:4 151:15
interrupt 84:24 89:18 93:1,15 96:3,10
interrupted 85:5
interruption 86:2
interrupts 85:12,19 86:8
intersect 83:4
intervening 70:4
intrinsic 117:2 117:4
introduce 161:9 166:23
introduced 11:12 49:1 105:4
introducing 50:12
invalidity 13:3
invention 118:20 166:1
inventor 90:22 90:23 115:12 147:17
inventors 93:19 93:20 121:5 144:11,12 146:2
investigated 19:15 20:6 21:16 22:3,8 22:20
investigating 24:2
investigation 22:1
involved 52:19
ion 17:15
ipr 13:9,12,16 14:2,18 15:6 52:10,15
iprs 13:5 15:2 15:10

ir 49:12 128:16 128:16,21 129:3,23,25 131:20 132:1 132:13 133:19 133:25 134:10 134:16,17
irell 3:3 6:8
irell.com 3:9 170:2
island 92:12
islands 115:14
isolation 105:16 106:5 107:12,23 118:22,24
issue 11:21 13:24 148:20 148:21
issued 15:9 126:22
issues 6:24 24:3 39:6
item 81:2,16 82:2,2,13,14,21 82:22
items 102:1
ito 44:13,20,24

j

japanese 4:18
joann 3:21 5:22
job 1:24
joint 45:10 51:10 53:22 56:3,4,5,13,20 56:24 57:2,19 57:25 58:13,24 59:21 60:9
jointly 54:5 57:23
journal 24:17
jrg 1:11 2:7 5:20
july 4:16 92:22 93:25
june 7:6
jury 76:23 77:8
justice 89:8
justifies 104:3

k

keep 25:7
kept 60:21 61:6
kind 85:16 88:15 157:20 158:2
know 7:19 15:9 18:3 25:17,19 26:9 40:1 46:25 47:8,16 49:6 50:16 52:20 61:8,11 79:23 88:4,14 93:20 102:25 116:5 160:22 161:13
knowledge 89:18 120:9
known 47:22 100:22 102:9 118:19

l

l 62:20 109:17
labeled 102:2 114:8
laboratories 16:24 18:6
ladies 76:23
language 12:6 12:16 117:13 129:4
law 3:5,13 7:2 123:18,24
laws 168:1
layer 45:10 51:8 67:15,22 67:24 68:14,17 68:22 69:8,19 69:23 70:5,14 70:23 71:10,19 71:21 72:20,21 72:23,24 73:4 74:2,16 75:8 75:12,13,19,20 76:5,5,10,10,11 76:15,20 77:1 77:9,18,20,21 77:25 78:3,4,4 78:5,6,8,16 79:11 80:25 81:1 84:11,12 84:12,22,25 85:1,6,7,10,11 85:12,13,14,18 85:19,21,23 86:4,7,10,11,13 86:15 87:4,5,9 87:10,17 88:5 88:7,12,15,15 88:18,21,22,23 89:14,14,18,22 90:4,12,13,15 92:6,11,11,13 92:14,16 93:1 93:2,12,13,17 93:18 94:20 95:11 96:3,4,9 96:9 97:1,2,20 98:4 100:4,21 101:5 102:4,9 102:11,13,18 102:19 106:9 106:12,17,23 107:6,7 108:1 108:3,4,5,6,10 108:12,23 109:1,1,3,3,11 109:12,16,20 109:20,21,21 109:22,23,25 110:1,3,4,25 111:6,13,15,22 112:2 118:1,22 118:23 119:2,3 119:7,13,18,22 127:11 129:14 129:16 134:25 135:7,7,11,21 135:23,23,25 136:2,9,12,16 136:17,19,25

Pictiva EX2016
Samsung v Pictiva
IPR2024-01095

136:25 137:3 137:17,24 138:9,24 139:4 139:8,14 140:1 140:15,19,19 140:22 141:7,8 141:14,17,23 142:6,8,12 143:9,25 144:3 144:5,10,17,24 145:10,11,20 145:24 146:5,8 146:18,22,23 147:8,14,18,20 148:1,14,16 149:15,16,24 150:2,3,4,9,12 150:19,19 151:1,2,4,13,15 151:16,20,23 151:24,25 152:6,6,14 154:8 162:5,6 162:9,19,22 163:3,7,9,11,13 163:21 164:6 165:11
layered 141:10
layers 68:2 69:2,3,7,13,14 69:15,19 70:2 70:3,8,9,17,17 70:22 71:3,4,9 71:16,22 72:5 72:11 73:10,11 73:13,18,19,21 74:7,10,14,22 74:24,25 75:24 76:12,18 77:9 77:11 88:1,3 88:11 90:20 91:13,13 92:1 92:25 93:18 106:13 108:10 109:7,9,10,12 109:15,19 110:13,13,18 110:18 111:1,7 111:22 112:2 119:19 136:18 136:20 145:12 147:10,13 149:25 152:2,6
leads 158:10
led 149:10
left 51:14 90:5 163:23 164:3
legal 5:23,25 8:7,16 9:24 170:7
length 128:8
lengthy 103:7
level 81:23,24 81:25 83:6,7
light 17:24,25 49:16,25 50:1 109:17 111:13 111:15 117:18 117:19 118:1 119:2,3,7,12,13 132:24,25 134:4,12,15,20 135:22,23,24 136:8,17,18 150:9 153:25 154:1,5,9,10 159:18,19,20 160:11,13
limit 137:2 144:2 166:7
limitation 60:19 67:18 68:5,15,19 71:5 73:2,14 73:24 77:13 86:15 105:14 110:2,2 133:15 162:17
limitations 154:13
limited 18:18 59:25 62:21 65:19 66:3 80:12 97:17 123:17,23 125:4 146:12 165:17
limiting 161:1 161:6
limits 146:14
line 58:9 83:3,4 100:13 125:15 145:5 152:24 153:1 170:15 171:4
lines 110:11,16 110:22,23 111:4 137:14 137:21 138:16
linked 61:17,19 61:24 62:11 63:13,25 64:1 64:6
liq 51:11 52:4
liquid 56:9 57:5 58:5 59:22
listen 75:3 99:4
lithium 51:14 51:19,25 52:15 53:3,7,13
little 8:20 19:13 37:6,19 45:2 82:25 103:11 114:16
llp 3:3,11
local 25:10 26:10
located 57:10 57:11
locked 170:12 171:1
long 7:10 12:11 19:2 131:19,22
longer 26:8
look 12:9 40:1 45:2 52:23 55:21 58:9 70:7 74:20,20 74:21,23,23

75:23 77:15 80:14 81:22 84:6 86:17 87:2 90:14,17 91:18 92:3,4 92:18 93:25 94:2 97:24 99:2 100:13,17 101:3,18,20 111:10 113:3 117:14 120:16 121:23 125:17 126:6 135:13 136:4 138:21 141:5 145:5 146:25 148:13 152:21,22 154:18 162:8 163:18
looked 25:18 39:3,5 93:9 157:17
looking 61:8 87:22 89:22 91:5 137:11 149:17
looks 86:25 88:5 90:21,25
lori 1:22 2:17 5:24 169:4,21
los 169:2
lot 16:7 80:2 96:21 103:7,8 103:19,20
loud 166:15
low 116:20
lower 69:23
luncheon 66:18

m

m 1:22 2:17 52:5 62:20 169:4,21
ma 52:4,5
made 17:25 23:10 25:10 33:15 34:10 40:5 43:13 52:6 93:12 115:12 144:11 148:24
maintain 143:3
major 102:20
make 31:16 83:15,17,18 88:13 99:17 103:9 114:1 117:14,23 119:7,14 131:21 142:24 166:20 170:14 171:3
makes 84:9,13 86:8
making 24:3
manella 3:3 6:9
manner 13:18 21:15 22:20 83:23,24 100:22 153:16 153:21 154:6 154:17,25
manufacturing 123:20
marked 1:1 7:16 49:3 50:13 67:5 80:16 86:19 94:4 105:6 113:5 135:15 161:10
marshall 1:5 2:3 5:20
mask 100:23
material 16:5,8 16:23 17:3 20:5,19,20 21:3 49:17,19 49:25 50:1 84:10,23 93:7 93:7,8,10,13,21 94:11,20 95:11 95:19 96:2 104:9,23,25 105:11,13,19 105:20,20,24 106:6,6 109:4 112:6,16,18,20 113:23 114:7,9 114:11,12,17 114:23,25 115:1,6,7,8,9 115:15,19 117:2,4,5,16,17 117:18,19,20 119:1 144:8
materials 7:10 11:5,14 16:8 17:11,12 20:6 20:9,14,22,24 21:2,5 22:16 56:10,12 57:3 107:19 108:7,8 108:17,19 112:13,19,23 113:1,17,18 114:3,5,19,20 115:2,3,5,20,23 117:8 120:23 122:1,8,17 144:3 145:13
matrices 106:16,22 107:4,15,25
matrix 104:23 104:23,25 105:1,10,11,13 105:13,15,16 105:19,19,20 105:21,23,24 105:25 106:2,4 106:5,6,25 107:8,16,18,19 107:19,22 108:6,7,7,8,12 108:16,17,18 108:18,23 109:4 110:14 110:19 112:5,6 112:12,14,16

Pictiva EX2016
Samsung v Pictiva
IPR2024-01095

112:18,20,23 113:17,17,18 113:23 114:3 114:11,17,18 114:19,23,25 115:1,2,3,5,9 115:15,15,18 115:18,19,21 115:22,23 117:16,17 119:1,12,12
matter 5:16 89:3,9
max 17:2
mean 10:12 13:21,23,24 18:15 30:5 38:21 54:14 55:16 78:18 82:6,8 83:5 112:7 128:1 130:17 135:7 136:2,13 145:2 151:1 152:11 153:6,7 159:12 164:19
meaning 27:18 27:21 43:5 116:8 144:2 156:2,5
meanings 112:19
means 63:23 82:8 83:14 93:16 112:8 124:23 129:4 132:23 143:17 143:18 153:22 160:11
meant 147:19
measure 20:8 22:9,13 23:21 118:22,24 119:21 122:16
measured 20:10 23:2,22
measurement 22:14 23:2 119:10
measurements 20:13 22:15 24:3
measuring 118:20 119:10
media 5:15
meet 30:24 31:5 58:17,25 60:6 68:14,18 85:6 86:15 89:14 132:8,11
meets 73:23
melissa 3:12 6:10
melissabaily 3:17
mention 59:11 99:24
mentioned 18:9 22:25 47:7 48:25 60:16 73:5 120:4 129:23 131:4,5 137:11 150:12
mentioning 150:16
mentions 117:15
mers 62:20
met 71:6 86:1
metal 27:10,13 27:15,16,18 28:3,13,14,17 28:24 29:24,25 30:4,11,15,15 30:18,19,22,23 30:24 31:4,5,9 31:13,15,18,20 31:21,23,24 32:1,1,4,5,5,6 32:10,11,12,17 32:19,22 33:5 33:11,16,17 34:4,9,14,17,20 34:21,23 35:4 35:8,9,12,12,21 35:21 36:1,3,7 36:14,21,23 37:7,8,9,14,14 37:15,23 38:3 38:4,10,17,19 39:19,21 40:7 40:8,13,17,19 40:22 41:2,4,5 41:10,12,14,18 41:19 42:8,11 42:12,20 43:2 43:4,6,7 44:3,9 44:14,16,18,24 45:11,12 46:8 46:14,22 47:1 48:21 49:13,23 49:24 50:5 51:10,18,19,25 52:16 53:4,14 53:21 54:2,4 56:8 58:14 61:16,20,24 62:11 63:4,5,9 63:24 64:2,14 64:16,19,20 65:11,12,13 88:1,2,11 90:20 91:13 92:11,11,13 97:19,24 98:3 98:5,15,20,24 99:3,7,11,18,19 99:20 100:3,5 144:8
metallic 48:4
metals 44:22 98:21 99:18
methanol 47:17 47:24 48:4
method 20:22 79:1,7,15,18 122:24 123:2,6 123:8,11,15,17 123:19,20 124:2,3,12,19

124:22 125:1,1 125:3,4,6,10,10 125:15,19 161:18 164:15 164:23
methods 23:14 102:9
microelectro... 17:11
micrometers 133:7
middle 49:11 49:16 83:2 94:15 95:5 111:15 128:21
midway 100:17
mind 29:20 36:1 50:11 60:22 61:6
minimum 131:18 133:24
mischaracteri... 9:8
mischaracteri... 77:4
missed 59:13
misspoke 130:3
mixed 124:7,9
mixture 105:23 112:6 113:1 114:14 115:19 115:20,21,23
mobilities 117:23,25 118:2,10
mobility 18:22 19:9,17,19,22 19:23 20:2,4,8 20:12,24 21:2 21:8,10,12,14 21:21,24 22:17 23:6,19,22,25 24:5,9,10 116:2,6,8,14,15 116:19,21,24 117:9,16,21 118:7,13,15,15 118:20,23,24 119:1,7,11,11 119:21,25 120:5,19 121:5 122:1,7,16
modification 12:15
modifies 154:3
modify 157:8
molecule 52:3 120:20
molecules 57:12 60:6 63:10 121:3,4
moment 61:13 79:3 80:1,3 98:25
morning 5:5
motion 102:24
motions 83:12
move 10:16 53:20 55:13 60:23 75:2,14 82:19 83:9 99:5 101:16 102:21 103:14 108:20 110:6 121:10 125:21
moved 126:21
moving 62:2
multiple 26:7 28:23 62:11,15 68:2 69:7,18 72:5,10 96:14 106:13 108:10 109:9,10,12,14 110:12,17 115:2 136:20 139:8 163:22
mute 166:14
mutually 156:25

n

n 4:1 51:11
nacl 31:9
name 5:22 6:20 36:25 46:18 121:20 169:18
names 46:12
naming 148:20
nanometer 128:15,18 130:21,23 131:24 132:3,9 132:14 133:14 133:15
nanometers 128:25 129:1,9 129:9,19 130:6 130:7,13,13 132:4,6,7,7,10 133:6,8,9 134:6,13,21
naoh 36:10
natural 142:1
naturally 142:7 153:13
necessarily 54:21 137:25 138:20
necessary 170:14 171:3
need 12:8 14:15 26:14 35:14,24 37:19 38:13 39:1 46:3,10 46:23 47:9,13 47:18 52:23 54:25 55:5,23 65:9 66:10 69:3 72:6 79:20 86:1 89:7 93:25 97:24 105:3 108:18 113:25 125:23 131:11 135:13 143:20 147:23 160:6 160:14,16,22
needs 60:5 69:15 131:12 131:14 133:17 133:19,23

Pictiva EX2016
Samsung v Pictiva
IPR2024-01095

134:1,2 159:4 159:17,18
neither 119:6 164:12 165:6 165:22 169:13
neutralize 45:25
never 33:12 103:2
new 1:18 2:15 5:1
newport 3:6,7
nomenclature 37:18 148:20
non 21:20 92:23
nonresponsive 10:17 60:24 75:3,15 99:5 101:17 103:8 108:21 110:6 121:11
notating 170:15 171:4
note 5:7 92:21 94:10 103:5 126:1 161:1
notes 31:23
noticing 6:7
noting 126:5
number 4:8,15 5:15,20 13:19 62:21 67:17 83:4,7,8 86:23 106:16,22 107:24 114:2 117:15,15,19 117:25 119:17 124:23 125:15 141:14,14,15 153:1 170:15 171:4
numeral 141:8

o

o 62:20,20 109:17
oath 6:14 10:1 47:5
object 10:4,13 10:20 14:4,10 14:23 16:1,13 17:9,20 18:16 20:3 22:10,18 23:7,20 24:7 27:19 28:4 29:13 30:6,17 30:25 31:7 32:3,13,25 33:8,13,21 34:5,11,16,24 36:4,22 38:6 38:20 41:6,11 42:6,15 43:8 43:15 44:4 45:19 46:2,16 47:2,20 49:14 51:16,21 52:17 53:5,16 54:15 54:23 55:17 56:6 57:1,20 59:2,12,19 60:2 61:4 62:1 62:13 63:6 64:8,12,25 65:7,22 66:5 68:16,25 69:11 69:21 70:6,15 71:1,11,23 72:8,25 73:6 73:17 74:4,18 75:9,22 76:7 77:19 78:2,12 79:9,25 81:11 81:17 82:3,15 82:24 83:16,21 84:4,17 85:3 85:24 86:12 87:6,11,18,24 88:19,24 89:16 89:24 90:16 91:7 92:2 93:3 93:23 96:5 97:22 98:17 99:16 101:21 102:3,15 106:3 106:18,24 107:11 108:14 108:25 111:8 113:20 114:15 114:24 115:16 117:10 120:7 123:22 124:4 125:8,13 128:6 129:11,21 130:9,15 131:2 133:10 136:21 137:4 138:2,19 139:17 140:4 141:3,24 143:10 144:1 144:25 145:21 147:21 149:6 149:19 150:6 151:9 153:20 154:20 156:3 156:12 157:6 157:16 158:1 159:2 166:2,8
objection 9:12 76:17
objections 6:3 77:3
objective 154:22
obstructed 103:16
obtain 116:19 116:21 159:9
obtained 45:10
obviously 83:11 102:24 104:2
occur 57:7,16 58:24 60:5 79:18 93:18
occurred 56:20 56:24
occurring 61:2 61:10

Pictiva EX2016
Samsung v Pictiva
IPR2024-01095

occurs 56:3 60:5 90:8
offered 11:18 39:10
office 12:22 25:14 26:6 170:11
oh 47:25
okay 18:20 29:22 36:16 48:6 50:20 54:9 59:6,9 61:12 72:13 80:14 103:4,23 111:23 128:23 134:24 137:7 151:22 167:2
old 25:15
older 26:11
oled 100:24 109:17 138:13 139:19 140:8 140:11,13 143:12,14,15 143:24 144:7 144:16,18,20 144:22,23 149:10,11 151:18 164:6,8
oleds 19:4 136:18
oligo 62:20
once 48:23,24 50:16 56:12 57:8 81:8,14
one's 44:12
onward 102:22
open 7:19 49:6 49:8 67:8 113:21
opened 11:10
operation 127:17,23 128:3,3 135:2 140:17 152:11 152:14
operator 5:5 26:17,21 27:1 48:6,10,15 66:14,23 104:17 125:24 126:10,15 155:6,10,15 167:5
opine 116:23
opined 14:21 27:10 35:15 37:20 68:10 87:20 116:1 122:23 127:8 164:9
opining 8:9 40:18
opinion 28:16 28:18,20 38:8 43:16 52:2 53:2 65:18 69:12 73:2 77:13 82:13,22 88:8,8,13,25 91:15,20,25 120:4 138:17 149:23 153:15 156:24 157:10 166:6
opinions 10:15 10:21,23 11:15 13:13 14:3 39:4 50:23 60:14 113:16 120:14 121:13 127:3 161:4
opportunity 60:6 91:17
oppose 83:11 102:24
opposed 9:18 56:4 62:12 105:10
optical 153:24 156:14,17 157:8,19,20,24 158:8,13 159:5 159:6,6,6,16 160:9,20
optoelectronic 139:14 155:22 156:9,24 157:5 157:11,22 158:25 159:14 160:4,18,21 161:19,21,22 162:10 163:24 164:4,7,8 166:10
optoelectronics 17:11
order 13:20,21 13:23,24 46:12 46:24 52:24 55:23 114:1 144:16
orders 64:6
ordinary 27:18 39:18 43:5 156:2,5
organic 17:19 17:24,25 35:6 35:13,16,24 37:10,17,17,24 38:3,11,18 45:9,13,17,21 45:22 53:20 54:1,3 56:8 58:15 61:17,19 61:25 62:11,12 62:15,19,23 63:4,5,7,8,12 63:19,20,25 64:1,14,15,19 64:20 65:12,12 65:13 88:15 102:8 106:9,12 106:13,17,23 107:5,7 108:1 108:2,9 109:6 109:9,11,17,19 109:25 110:3 110:13,18 127:11 129:14

129:16 134:25 135:7 136:9,19 136:25 137:17 137:24 138:9 138:24 139:7 139:14 140:1 140:15,18,21 141:7,8,10,14 141:17,23 142:6,8,12 143:9,25 144:3 144:3,5,8,9 145:10,13,20 145:24 146:5,8 146:18 147:8 147:13,18,19 148:1,14,15 149:15,16,24 150:2,3,19 151:1,13,15 152:13
original 170:10 170:20,22
originally 57:3
originates 52:4
outcome 6:2 169:16
output 160:12
outside 28:5,16 28:21 34:6 45:21 112:15 112:17,21 116:7,12 157:13
overall 7:12
overcome 148:9
own 121:25
owner 14:25
oxide 34:23 35:4,8,11,12,12 35:12,17 36:1 36:8,14,18,21 37:1,3,7,8,14 38:4,17 39:19 43:3,6 46:15 46:22 47:1 144:9
oxides 35:21 37:23 44:9
oxygen 27:16 29:25 30:11,15 30:23 31:5,25 32:19,23 33:5 33:12,18 34:4 35:9,22 36:3,7 36:9,19 37:9 37:15,15 38:5 38:10,19 39:21 40:9,12,17,25 41:3,10,13 42:2,5,9,13,21 43:3,7 44:15 44:16,19,20,24 45:17,23 46:8 48:21 49:23

p

p.m. 2:16 48:11 48:16 66:15,18 66:20,24 104:13,18 126:3,11,16 155:11,16
pacific 126:3
page 4:4,8 27:5 27:8 43:21 44:10 45:3 50:20,20,25 51:1,3 53:23 62:6 68:7 78:24 79:7 80:19 94:7,9 94:15 97:4,10 98:3 113:10,14 113:15 170:15 171:4
pages 1:25 169:10 170:14 170:17,17 171:3,6,6
palmans 97:9 97:12,15,16,21 98:15 99:25
pane 154:2,2 155:2
paper 11:2
papers 24:13
paperwork 24:15
paragraph 18:2,5,10,20 39:14 40:2 45:2,3 51:5 84:6,18 92:18 92:21 94:16 95:4,5 96:14 96:24 98:2,19 98:20 99:11 100:18 111:2 111:11,17 116:22 120:14 120:16 141:1 142:16,20 143:1 161:5
paragraphs 119:23 120:5 121:14,23
parameters 19:16 20:12 21:19,19,20 22:25 23:1,2 23:24,25
part 8:2 13:11 17:16 27:23 45:17 69:22 71:8 74:12,16 75:5 78:5 79:10 91:14 121:8 125:10 132:17 135:5 141:6 142:6,8 142:12 143:25 144:5,9 145:20 145:23 146:5,8 146:23 147:25 148:14,15

150:2 151:3,13 151:23 152:8 153:2,4,6,6,7 153:11,11 162:3,12,15,24 163:14 164:4
partes 4:11 13:6
participants 5:10
particles 89:19 96:11
particular 19:3 19:5,6 20:23 21:1 37:20 49:20 50:3,9 50:10 53:7 67:11 78:6,22 88:9 93:12,21 99:18 128:8,9 154:15,16
parties 5:14 11:19 153:18
parts 8:12 12:2 12:7,12 14:16 14:24,25 48:23 80:8,13 90:1 142:23
party 6:1 120:13 121:12 121:15,19,20 169:14,15
pass 154:10
passage 43:22
passive 155:22 156:25 157:4 157:14 158:14 158:18,25 160:19,25 161:22,25 162:3,4,13,15 162:24 163:1 163:14 164:2 164:16,18,23 165:4,14,24 166:4
patent 4:10,11 4:12,13,14,17 4:18,20,21 14:25 27:9,21 28:6,17,22 29:5,23 34:7 35:1 45:22 48:19,20,22 52:7,11,15 53:3,8,11,15 58:10,11 60:15 62:20 63:1,18 64:5 65:3,3,16 65:24 66:7 67:4 71:15 79:20 84:9 85:2 86:22 88:1,9,11,17 89:6 90:2,18 90:19 91:9,12 91:18,19 92:16 100:12 104:21 104:22 105:5 105:10 106:8 106:15,21 108:11,16,22 109:8,18 110:11,16 111:23,25 112:15,18,21 114:2,6 115:4 116:2,7,12,25 119:16 120:15 120:17 121:7,9 121:16 122:10 123:18,24 125:22 126:19 126:21,23,25 127:1,4,5 134:23 135:12 136:5,13 137:9 140:14,15,20 141:13 142:11 142:13,15,23 144:6 146:1,4 146:7,12 148:7 148:10,18,23 148:24 149:5 151:11,15 152:18,22,22 155:20 156:6 157:1,3,13 160:5 163:18
patents 11:17 11:21 12:4 13:16,25 127:5
pdf 50:20 51:1 80:19 170:12 171:1
penalty 168:1 170:16 171:5
people 122:12
percent 47:9 87:1 166:24
percentage 8:14,21 9:2,5 9:17
perform 121:24
performing 72:1 162:10
period 170:18 171:7
perjury 168:1 170:17 171:6
person 30:3,8 35:3 39:17 72:1 75:23 112:22 116:4 116:13 124:14 124:17 138:15 143:4,11 154:23 165:10
personally 10:19
persons 66:20
petition 4:11 13:19 14:17 52:10,11,15,23
petitions 13:6,7 13:9,12,14,16 14:2,15,18,24 50:22

Pictiva EX2016
Samsung v Pictiva
IPR2024-01095

ph.d. 16:2
phase 54:3 55:6 55:10 57:15 58:17,25 59:11 59:18,22,23,23 60:1,5,16,20 61:3,10 112:6 112:7,8,10,11 114:13,19 115:18
photo 156:15 157:4,7,10,14 157:18 158:5,7
photoresist 81:3,5,9,15
phrase 59:16 74:11 161:1
physical 56:15 56:16 74:6 75:7,10,25 76:20 77:1,12
physically 55:3 56:10 57:7 74:9 75:21
pictiva 1:8 2:5 5:17 6:9 33:25 126:21 132:3 132:19 170:4
pictiva's 132:17 133:12 133:13
pictorial 138:21,24 145:22 151:12
picture 74:20 74:21
piece 44:6
pieces 26:11
place 5:13 169:7
plain 27:18 156:2,5
plaintiff 1:10 2:6,15
planar 83:15 83:17 84:13,23
planarization 67:14,22,24 68:2,22 69:1,3 69:7,13,14,14 69:19,23 70:2 70:3,4,8,9,13 70:16,17,22 71:3,4,8,16,19 71:21,22 72:5 72:10,15,19,21 72:24 73:4,10 73:11,13,19,21 74:7,13,21,24 74:25 75:8,12 75:13,18,20,24 76:9,10,11,12 76:15,18,19,25 77:9,9,11 78:16 80:25 81:1 84:11 85:1,6,7,11,23 86:3,11 88:12 89:14 92:6,14 92:16,25 93:13 93:18 94:19 95:10 96:9 97:1,20 98:4 100:4
planck 17:2
plane 83:18
plasma 79:2,4
play 120:24
played 14:5
please 5:7 6:3 6:20 82:19 99:4 101:23 162:14 163:10
plural 76:12 137:15,22 139:3
plurality 164:9
point 14:17 48:25 56:4 59:7 78:22 89:17 90:3 99:21 119:14 131:17,17 148:12
pointing 36:24 132:12 148:11
points 60:22 61:6 102:5 117:11 133:4
polycrystalline 18:23 19:10 20:21 21:7,9 21:23 23:12 24:4,10
polymer 88:18 88:21
polytechnic 19:1
portion 8:7,16 30:3 79:23 96:25 101:9,19 102:1,8 127:21 142:10,16,19 149:23
portions 8:3,5 8:8 142:25
posa 117:24 118:9,14
posita 142:1
position 33:11 36:13 51:25 52:14 53:6 63:15 64:3 68:13 69:6 70:22 71:2 78:15,18 82:1 84:22 92:24 112:5 116:4 117:7 118:18 128:24 133:1 143:23 145:18 150:18 151:2 158:23
positioned 150:3
possession 122:18
possibilities 55:20 160:23

possibility 29:2 29:15 109:24 113:22
possible 91:4 117:8,14 153:16,22 154:6,17,25
potentially 88:2
practical 154:12
practically 90:8
practice 73:2 90:25
preamble 161:2 164:15 165:18 165:20,25 166:5,10
preambles 161:6
precise 66:3
preliminarily 166:18
preliminary 11:18 14:25 15:3,3
preparing 7:11
presence 120:1
present 6:5 26:9,14 29:21 65:9 66:21 88:4 96:19 112:13 115:6,7 152:7
presently 45:8
pretty 58:4 115:11 136:15 143:13 166:22
prime 93:8,10
principal 116:23
principle 154:7
printed 11:7
prior 12:16,19 12:21 13:7,12 14:12,18 80:2 97:14 150:7,8 150:13 151:18
privileged 9:12
probably 19:6 79:21 80:11 103:13
problem 118:9 118:12,16 148:6
problematic 116:10
problems 118:8
procedure 170:19,21
proceeding 6:3
proceedings 169:6,11
process 10:25 13:8 14:11,13 72:1 79:11 101:13 102:13 159:8
processing 16:8 102:8
produce 124:15
producing 123:3,11,19 124:3 125:1,6 125:11 161:18 164:16,23
product 8:1 10:8,14 47:16 150:8
production 122:24 123:8 125:16
products 121:25 122:6,8 122:17
professional 16:9 82:13,21
project 18:21 19:3,5,6 20:2 20:17 21:5 24:14,16,16,18 24:20,22,23,24 25:1,2,3,4,5,7 25:20,20
propagate 85:5
propagation 84:24 85:4,12 85:19 86:9 93:1,15,17 96:3,10
properties 19:15 20:5,10 20:11,18 21:16 21:18 22:3,5,9 22:20,21,22 23:15,22,23
property 117:2 117:4,5
propose 73:1 104:22 139:23
proposed 30:8 53:24 54:20 62:9 65:5,10 65:20 68:21 107:1 129:25 131:6 132:21 139:2,12 140:18 141:21 142:20 145:3 155:25 156:8 160:15,24,24 164:18
prosecution 27:22,23 33:15 33:25 34:3 41:25 43:23 45:4 78:20 81:2
provide 97:21 98:5 100:5 161:4
provided 10:21 67:17 155:21 156:1,19 170:19 171:8
provider 26:4
provides 84:23

Pictiva EX2016
Samsung v Pictiva
IPR2024-01095

providing 103:20
ptab 15:9,12 51:25
publication 4:14 24:17 52:5,5 86:23 89:2 121:21
publications 120:12 121:12 121:15,20 151:5,6
publish 24:13
published 4:19 24:18
pull 50:16 161:13
purpose 85:7
purposes 52:15 122:9
put 121:19
putting 50:7

q

qualify 29:11 38:17 41:13 53:14 61:25 64:4,24 85:7 85:11 86:10
quality 5:8,9 22:24
quantity 19:23 22:22 115:6,7 115:8 132:13
question 8:20 9:14,15,16 20:25 23:9 31:1 33:1 34:25 35:5,15 37:6,21 38:11 38:24 39:2 40:15,20 42:3 42:17 46:5,13 46:21,24 47:14 52:24 55:15 62:5,8,9 63:12 63:17,21 72:10 75:4,6,16,17,17 76:3,25 77:5 79:16 81:12 82:17,20 85:15 85:16 87:7 89:25 90:10 92:7 93:5,24 98:11 99:1,5,6 101:11,18,22 106:19 108:21 108:22 110:5 110:15 111:3,9 112:25 121:17 121:18 130:10 136:12 137:20 150:22 157:18 160:1,1 163:10
questions 103:8 103:12,16,19 103:22 122:3 166:13
quick 89:8 91:22 125:22
quinn 3:11 6:10 7:1
quinnemanue... 3:17
quite 39:5,6 160:1
quote 43:21 94:9 97:7 142:20,25
quoted 100:10
quotes 120:16

r

r 62:20 114:8
r&s 171:1,9
radiation 127:12,14,16 127:16,23,23 128:3,12,12 129:8,17,18 130:20 131:3 131:10,11,13 131:15,16 132:22 133:3,3 133:8,17,18 134:3 135:1 140:16 152:10 152:13 156:11 158:24 159:3 159:13 160:3 160:17
range 127:15 127:22 128:2,5 128:7,7,12,16 128:17,18,19 129:5,6,8,19,22 129:24,25 130:6,24 132:20 133:2,5 133:6,8,14,18 134:5,10
ranges 128:14 134:13
rare 109:13 158:22
rather 78:7 90:24 94:19 95:10 114:19 144:8
rcarson 3:9 170:2
reach 129:2,3 129:23 131:12 131:18 133:24 133:25,25 134:16,17
reaches 128:17 133:19
reaction 46:4 47:16 48:4
reactive 47:22
reacts 47:17,23 48:1
read 11:21,24 12:3,5,7,10,11 12:13,14,15,16 12:21 13:1,2 15:13 32:15 39:15 40:3 45:5 51:5 53:24 58:11

Pictiva EX2016
Samsung v Pictiva
IPR2024-01095

61:14 80:6,7,9 80:11 84:7 94:17 95:8 96:20 97:12 100:1,18 102:6 111:2,20 112:3 120:17 125:3 127:9 138:16 145:6
readily 47:23 82:16
reading 12:18 12:19 40:11,21 40:24 41:1,9 95:3 142:13 165:10 170:24 171:9
reads 51:5
real 66:11 90:8 91:22
really 28:20 63:22 75:3,6 78:4 87:19 103:5 145:1 147:19 160:2
reason 14:1 47:13 73:23 116:23 143:20 165:7
reasonable 141:25
reasoning 147:22,23 153:9 164:12
reasons 117:3
rebecca 3:4 6:8 66:10 102:25 170:1
recall 9:1 13:14 13:15 19:20 24:8,9,17,21 25:5 39:25 44:5 48:24 79:3 80:1,3 96:22 97:14 98:25 99:20 127:7
receive 157:7 158:8
received 7:21 10:23 15:21 97:14
receives 156:13
recent 18:13 27:23
recently 126:21 126:22
recess 26:24 48:13 66:18 104:15 126:13 155:13
recite 105:10 105:21 106:1 106:15 107:10 107:22 124:2
recited 107:23 108:3 124:16
recites 106:8 122:24 123:2 161:18 164:13
recollection 13:19 20:15 21:9,23 22:2,3 43:19 49:15,24 108:15
recombination 110:24 111:5 111:12,21 112:1
recombine 119:5
reconnected 126:5
record 5:6,14 6:6,21 19:11 26:18,21 27:1 48:7,10,15 66:11,14,23 103:3,5 104:12 104:17 125:25 126:2,6,8,10,15 131:22 155:7 155:10,15 167:4,6 169:11
recorded 5:12 5:15 169:8
recording 5:8 5:13
red 134:12,15
refer 61:9 116:14 119:15 124:13 128:25 131:8,24 132:3 136:20 138:18
reference 4:13 33:25 43:22 59:17 78:20,23 80:9,12,15 93:21 95:25 96:20,23 97:12 97:17,21 98:16 99:23,25 105:3
referenced 141:1 170:6
references 12:6 12:17 80:5 96:21 97:9,14
referred 35:8 43:19 61:2 113:23 114:11 115:1,3,9,10 120:15 138:6,7 139:10,11 146:18
referring 17:23 22:5 39:14 51:13 109:2,2 109:6 128:13 131:9,23,25 132:2 143:1 159:14,16 162:22 163:8 163:13
refers 18:10,12 30:4 67:21 98:20 132:3,19 136:13 138:10 142:21 149:24 158:15 163:7

Pictiva EX2016
Samsung v Pictiva
IPR2024-01095

reflects 102:1
refusing 76:3
regard 122:22 148:18
regarding 27:9 48:24 113:16 122:6,15
regardless 38:18
region 114:8,8 127:13 129:17 130:12 131:4 132:22,24,25 133:17 134:3 135:18,21,24 135:24,25 136:1,3,5,5,7,8 136:14,16,17 139:16 140:2 147:11 162:9 162:12,15,20 162:23 163:23 163:25
regions 112:9 163:22
rejection 92:23
related 6:1 8:8 15:12 38:11 126:22 169:14
relates 42:7 116:15 117:13
relating 88:11 98:24
relationship 54:10,12
relative 120:22 120:23
relatively 158:22
released 170:22
relevant 12:2,7 12:12 15:1 39:9 60:22 61:6 80:7,13 90:1 96:18 122:11
relied 44:2,6,7 89:2 98:23
remarks 96:16 97:7
remotely 5:21
removal 17:12 102:19
remove 102:18
removed 81:6 101:10,20 102:2,5,9,11
removing 102:13
rendered 28:18 43:16 91:15
rensselear 18:25
repeat 163:10
rephrase 85:17
reply 15:3,4
report 8:11,12 8:12 24:23,24 25:1,2,20 62:6 79:24 87:20 89:1 91:14,16 92:19 93:9 96:14 119:23 161:4
reported 1:22
reporter 2:18 5:24 7:17 49:4 50:14 56:22 66:10 67:6 80:17 86:20 88:6 94:5 105:7 113:6 135:16 161:11
reports 24:16 25:3,7
represented 16:16
representing 5:23
reproduce 85:13 87:16 90:12 97:1 98:22
reproduced 86:5 91:3 92:8
reproduces 85:20 86:9,14 87:4,9,23 88:22 89:21
request 103:9
requested 171:1,9,10
require 105:21
required 66:7,9 105:19 170:20
requirement 83:23
requirements 145:3
requires 78:15 96:25 118:25 134:17 139:2,7 150:19
research 15:19 16:22,24 17:4 17:7,10,18 21:11 35:14 37:20 38:13 39:1 47:1
resistance 158:8,10
resisters 157:14 158:5,7 164:10
resistor 157:4,7 157:10,18 158:16 164:13 164:20,25 165:6,13,19,22
resistors 158:19 165:16
respect 10:24 11:16 14:13 35:6 80:7 91:12
respective 57:4
respond 28:3
responded 52:20

Pictiva EX2016
Samsung v Pictiva
IPR2024-01095

responding 103:17
response 4:16 8:19 12:23 15:1 38:24 92:22 94:1 159:10
responsible 8:17 9:20
responsive 103:11
rest 8:22
result 20:11 23:24 159:8
results 24:19 24:22 25:3
resumed 66:19
retained 6:23 7:1,3,5
return 170:17 171:6
review 4:11 11:14 13:3,9 13:12 14:1,8 14:15 39:8 48:19 50:21 60:15,22,25 80:13 90:1 113:10 122:5 122:14 127:5 170:8,10,13 171:2
reviewed 11:17 14:16,17 15:5 15:6 48:22,23 48:24 50:22 60:17,21 61:5 80:2 96:23 97:16,17 127:1
reviewing 7:10 13:5,17 14:12 97:5
reviews 13:6
right 6:25 7:8 9:4,6,16,19 14:22 15:16,25 18:6 21:14 24:6 27:11 39:7,24 40:14 46:9 50:19 52:11 54:7,22 68:7 80:10 82:6,10 90:4 98:16 109:9 117:2 119:25 125:21 127:19 131:10 135:3,8 138:15 140:14 140:22 149:18 152:14 155:19 159:10 164:1,5 166:13
role 14:6 120:24
row 63:5
rpi 18:25
rules 9:10,13 171:8
running 71:17

s

s 62:20 114:8
salt 31:15
samsung 1:12 1:12 2:8,9 5:17 6:11,24 7:3 51:24 52:13,20 121:24 122:3,6 122:15 170:4
samsung's 13:3 160:24
san 3:15
satisfied 154:16
satisfies 77:13
satisfy 34:15 56:20,24 70:23 73:5 77:25 78:10 129:9,19 130:7,14,25 131:6 133:15 134:8,14,21 144:22
satisfying 148:5
saw 113:9,14
saying 38:24 52:9 82:7,11 82:12 91:4 95:1 99:11 107:14 124:11 131:14,16 134:19 138:16 138:21 144:16 144:19,23 145:2 147:16 148:22 151:7 151:22 163:6 165:16
says 18:21 32:9 45:5 51:1 95:6 95:19 102:7 106:2 107:18 109:18 142:11 162:17 163:1 163:11
scenario 74:9 74:16 76:16 77:1,25
schedule 170:10
schematic 90:6
schooling 15:22
schubert 1:17 2:14 4:3,9 5:16 6:13,22 170:5
science 16:5,8 16:23 17:3
scope 109:14 166:5
screen 5:12 11:11 100:23
screens 79:2
scroll 67:10
seal 93:7,8
sealed 170:20
sealing 93:7,7,8 93:10,13,21 94:11,20 95:11 95:19 96:2

second 18:11 50:19 51:4 64:20 69:7 70:23 72:19,22 73:4 74:16 75:8,12,18,20 76:5,5,9,15,19 76:25 105:19 105:24 111:19 115:9 118:3,12 118:16 141:16 142:2,11 147:12 153:3 162:5,9,19,22 163:2,7,8,11,13
section 9:24 27:8 114:4 146:17 161:4
sections 9:23 10:2,5,7,8,19 12:13
see 14:15 18:20 45:15 46:3,10 46:23 48:20 51:4,13 57:3 58:20 60:15,18 61:1 62:18,23 62:24 63:11,12 63:13 80:19,22 81:22 82:11 91:9,11 93:6 94:13,16,25 95:5,16,18,22 98:2,6,23 100:10,14 101:1,19 104:4 109:24 111:11 111:19 113:10 121:19 135:17 136:5,6 139:22 141:4,5,6 145:16 149:20 150:15 152:23 153:1 162:17 162:21 163:4 163:21 164:2
seek 103:14
seeking 103:21
seen 5:11 15:12 86:24 113:8,13 126:24
selective 101:14
selectively 67:14,21 72:15 72:20 81:5 100:21 101:12
sense 49:18 89:11 158:13 160:10
sensed 156:10
senses 156:17 156:18
sensing 156:20
sensor 156:17
sensors 156:21
sentence 18:10 18:11,21 51:4 98:19,20 99:10 99:11 100:8,10 102:6,7,10 111:19
sentences 95:18
separate 55:3,8 63:11 105:14
separated 56:11 57:7 164:3
separately 111:10
separation 112:10
sequence 55:22 127:11 129:7 129:14,16 134:25 135:7 136:9,19,25 137:18,24 138:10,25 139:8,15 140:2 140:15,19,22 141:7,9,10,15 141:17,23 142:6,8,12 143:9,25 144:3 144:5,10 145:11,20,24 146:5,9,19 147:8,18,20 148:1,14,16 149:15,16,25 150:2,3,19 151:1,14,15 152:14 165:11
sequentially 77:10
series 65:11
serve 96:9
services 18:12 18:14
set 169:8
seven 13:16 104:7
several 79:14 79:17 111:1,7 111:22 112:2
shape 101:5 102:14
share 7:15 67:2 135:13
shifted 111:12
short 12:10 71:18 117:14 131:20 132:1
shorthand 2:18
show 63:18 79:7,7,10 92:1 114:13
shown 49:16 90:3,5 92:1 137:24 138:3 138:12 141:1 141:12 142:3,6 142:7 146:13 163:25 164:5
shows 52:4 102:7 145:23
sic 48:11 130:13

Pictiva EX2016
Samsung v Pictiva
IPR2024-01095

side 92:13 101:7,10 102:1 163:23 164:1,3 164:5
sign 170:16 171:5
signal 158:13 159:5,6,6,9 160:8,9,12,12
signals 159:23 159:25
signature 168:10 169:20 170:22,24,24 171:9
signed 8:19
significantly 120:6
silicon 18:23 19:10 20:19,20 20:20,21 21:4 21:7,7,10,13,23 23:10,11 24:4 24:5,10,11
similar 58:4 101:7
similarly 134:12 156:17
simple 55:15 63:2 75:6 160:2
simply 99:9
simulation 119:15,16
simultaneous 57:18 58:3
simultaneously 57:24 119:10 141:20
single 12:19 119:4 137:3 138:11,12 143:6,15
singular 76:15 139:15 140:22
sir 6:23 9:14 63:22 76:3 95:24 99:4 103:5 111:19 146:11
sitting 9:4,16 154:23
situated 100:23
situation 62:10 63:3 67:23 68:1 69:18 70:21 72:3 92:10 149:14 150:1
situations 32:22 33:4 56:3
six 13:15
sketch 90:21
skill 30:3,8 35:3 39:18 72:1 75:23 112:22 116:4 116:13 124:14 124:17 138:15 143:4,12 147:16 154:23 165:10 169:12
small 116:21 154:3
smaller 115:7,8
sodium 31:8,12 31:16,17,18 36:11,13,17,20 36:24 37:2,3 45:25 46:1,7,7 46:14,20,22,25 47:7,17,21,23 48:1,1,4
solid 16:3,21 17:1 56:9 57:5 58:5 59:22
solutions 5:23 5:25 170:7
somebody 103:3
somewhat 15:20 28:10 86:25 90:6 101:8
sorry 46:17 87:16 130:3 150:21
source 55:7 57:4 96:24
sources 55:3 56:14
space 56:13,14 57:11,11,15
speak 103:10
speaking 36:18 141:20
specific 9:1 10:2,5 12:8 20:15 29:20 38:14 41:22,22 41:23 42:21,22 48:23,25 65:19 90:19 91:11 101:15 116:11 133:4 143:3
specifically 12:22 25:4 59:10,17 60:18 61:2,9
specification 48:19,22 58:22 59:4,7 65:3 88:17 107:17 107:18 108:12 110:8 116:10 118:5 119:6 135:10 142:19 143:1 149:5
specifications 107:20
specifics 29:2,3 29:8 39:6 41:22
specified 62:22 95:20 117:18 117:25 118:11
specifies 107:4

specify 72:4 106:16,21 107:15,24
specifying 133:4
spectral 127:15 127:22 128:2,5 128:7,19 129:5 129:6,8,18,22 129:24,25 130:24 132:20 133:2,5,14,18 134:5,13 153:17
spectrum 128:2 128:11,20,20 128:22,25 129:24 131:9 131:10,15,19 131:20,23 132:1 133:2,4 133:20,24 134:2,20 135:2 140:17 152:10 152:11,12,18 152:19,23 153:3,5,5,7,8,8 153:10,11,12 153:12,13,13 153:14
speculate 47:12 47:18
speculation 47:4
spelled 41:24
spend 7:10
spent 7:12
spirit 73:13 141:16 142:14
sponsor 25:4
sponsored 25:5
ss 169:1
standard 37:18
standing 102:25 103:1
start 27:8 29:8 67:3 130:19,20 130:22
started 13:5,17
starting 128:8 134:13 152:19
starts 128:16 128:18 130:6 130:12,24 132:22,24 152:19 163:12
state 6:3,5,20 16:3,21 17:1 19:8 40:2 55:1 55:14,23 56:9 56:10,13 57:5 57:5,6,9,9 58:5 58:6 84:6 168:2 169:1 170:9,12
stated 39:17 94:16
statement 19:21 33:24 39:13,14 40:11 41:9 45:4 58:10 92:24 93:11,16 98:9 98:14 121:1 161:8
statements 33:14 39:11 40:5 88:1,10 90:19 92:21 96:18 98:24 99:17 120:8
states 1:3 2:1 5:18 12:14 57:14 120:17 123:8,11
stating 99:25
stenographic... 169:8
step 81:8,14 102:7 161:25
steps 79:14,17 79:21 80:22 124:12,16 125:19 166:6
stimulus 159:5
stipulation 170:21
stopped 66:11
storage 26:10
street 3:14
strict 132:13
strictly 36:18
strike 10:16 34:1 43:4 53:12 55:13 60:23 71:16,20 72:3 75:2,14 82:19 83:9,12 98:12 99:5 101:16 102:21 108:20 110:6 111:24 115:25 121:10 125:9 128:23 129:14 139:6 146:12 166:3
strongly 20:5
structure 46:11 46:11,24 47:11 52:4 61:13,14 61:16,18,23,25 62:3 63:24 64:1,4,18,21 65:9,15,19 79:12,12 90:5 90:8,23,24,24 144:18 153:24 165:12
structured 162:18 163:12
structures 64:24 65:6
students 28:2
studies 120:3 120:13 121:13 121:15
studs 97:19,24 98:3,5,15,24 99:1,3,7,12,18

Pictiva EX2016
Samsung v Pictiva
IPR2024-01095

99:21 100:3,5
study 89:7
subcompone... 62:21
subject 52:6 89:3
subjected 19:25 116:17
submitted 7:7 7:23 13:10 14:9
subscribed 169:17
subsequent 79:17
subsequently 16:4 72:19
substance 43:13
substantially 153:17
substrate 58:18 59:1 94:23 95:14 145:10
sugiura 114:7
suit 12:4
suite 3:6
sullivan 3:11
supervision 169:10
support 27:14 50:8 120:3,13 121:8,13 142:20 161:5
suppose 72:14
supposed 119:8
sur 15:4
sure 9:9,16 23:8 25:25 33:3 40:15 42:16 47:9,18 62:9 66:12 72:9 79:21 85:16 87:1 101:11 103:2 103:23 107:20 112:25 126:5 131:21 136:11 139:18 150:24 166:20,22,24
surface 58:18 59:1 74:13 77:10 84:13,23 92:5 97:21 98:5,16 99:12 100:6 101:7
surfaces 101:8
surprised 48:3
surrounding 117:1
system 17:15 25:14,21,23 72:14 152:2
systems 26:1,3

t

table 8:16
take 5:13 26:16 48:5 58:9 77:15 80:14 83:2 86:17 89:4 92:18 100:13 103:4 104:5,10 113:3 118:21,23 125:22 126:8 145:5 155:5
taken 2:15 26:24 48:13 51:24 52:13 66:18 93:11 104:15 126:13 155:13 169:7
talk 61:12 103:25 159:24
talking 28:11 28:11 29:5,6 38:9 39:7 45:20 47:8 50:4 52:8 73:14 82:5 147:3,4
taught 165:7
teaching 146:3 146:6
teachings 151:14
technical 8:18 9:20,21 18:12 18:14,18
technique 119:10,20
techniques 118:19
technology 5:22 28:9
tell 8:14,21 9:5 9:17 19:13 26:11 87:22 89:21
temporal 55:22
ten 137:16
term 10:5 27:10 28:17 54:19 57:23,24 59:9 62:2 67:21 68:5 71:15 106:25 116:1,13 127:8 127:21 134:24 135:10 136:25 165:24 166:4
terminology 137:8
terms 8:9 10:3 67:18 103:20 126:20 127:4 151:18 156:1
testified 6:15 21:22
testify 10:1
testifying 158:5
testimony 9:8 77:4 169:12
testing 120:3 120:13 121:25 122:6
testings 121:13

Pictiva EX2016
Samsung v Pictiva
IPR2024-01095

tests 120:10
texas 1:4 2:2 5:19 9:11
tft 20:10,11 21:5 22:23,24
tfts 18:23 19:10 19:11,15 20:19 20:24 21:2,17 21:18 22:4,21 22:21 23:10,15 23:23,23
thereof 169:16
thin 19:12 23:10
thing 64:3 136:16 142:1,1
things 20:1 25:15 65:14 105:1 119:24 120:4
think 21:22 35:25 37:5 47:8 73:9 74:19 89:1 90:21 99:6 103:13 104:2 113:9 122:18 130:3 133:22 136:15 137:11 140:5 141:25 146:25 152:17 161:8 166:16
thinking 166:15
third 69:7 105:20,24 120:13 121:12 121:15,19,20
thought 14:20 96:18
three 36:9 44:21 47:25 64:5,11 107:19 108:6,8,17,18 112:12
threshold 22:6
time 6:4 14:5,8 18:11 21:4 25:11 26:9,14 26:22 29:21 48:11,16 57:6 58:7 66:11,15 66:24 71:17,18 71:22 72:6 82:20 88:4 93:11 103:14 104:3,13,18 118:19 126:3,4 126:7,11,16 155:11,16 167:6 169:7 170:10,18,25 171:7
timeframe 7:6
times 58:23
tin 44:20,22
title 113:14
today 11:3,6 38:16,25 154:23
today's 167:5
together 72:7
tomorrow 166:20
top 38:21 61:11 72:20 84:12 92:5,12 96:22 97:15 100:24 101:7
topic 28:18 38:8
topography 85:14,21 86:3 86:9,14 87:14 87:16 88:23 89:22 90:13 91:3 92:1,8,9 97:1 98:22
topology 87:5 87:10,13
touch 69:20,23 74:10,12,16 75:21 76:5
touches 74:2
touching 69:10 73:16 74:5
transconduct... 22:6
transcribed 169:9
transcript 1:1 126:7 166:19 166:21 170:6,8 170:10,13,13 170:22 171:2,2
transfer 25:11
transferred 56:12 58:6
transistors 19:12 23:10
transition 25:10
transitioned 55:9
transitioning 59:22
transmit 153:25
transparent 144:9 153:19 154:4,8,9 155:2,3
transport 49:18 51:8 109:3,3,20,21 118:21,23 119:4 152:5,6
transporting 114:6,9 121:2
trial 122:11
tried 148:9
troy 1:18 2:15 5:1
true 168:2 169:11
try 20:2 23:5 103:10 110:5 130:3

Pictiva EX2016
Samsung v Pictiva
IPR2024-01095

trying 50:19 63:2,22 82:11 85:18 89:11 93:6 103:6 130:5 141:12
tungsten 34:18
turn 18:2 27:5 49:9 50:20 64:15,20 91:22 97:4 104:21 110:9,21 120:21 126:19 134:23 155:19
two 21:12 22:16 23:13 26:6 28:25 29:11,15,19 32:6,18 34:10 36:9 43:13,18 44:16 52:8 54:25 55:2,4,5 55:10 56:10,12 56:15 57:3,8 58:1,4,15,23 60:4 61:16,18 61:24 62:11,18 62:22,23 63:9 63:12,19,20,24 64:1,23 69:1 69:13 70:8,16 73:10,10,12,18 73:19 74:6,13 74:21,24 76:18 77:9,11 79:6 79:10 80:19 105:1 111:9,10 112:23 113:1 113:10 115:5 117:8,11 118:1 118:8 131:4,5 138:5,14,18 139:9,19,21 140:7 142:15 142:24 143:5 143:12 144:17 144:20,24 151:11,20 152:1,3
type 17:15 20:19
types 20:1 21:13 33:20 158:18
typically 12:18 35:9 36:6 37:14 71:22 134:5,12 136:18 144:7 151:25 157:14
typing 10:24

u

u 114:8,8
ultimately 8:11 90:24
ultraviolet 128:22
unable 76:24
unclear 125:19
under 10:1 30:13,21 31:3 34:19 47:5 56:25 61:22 64:4 68:21 69:8 72:22 85:10,22 86:11 136:24 160:15 164:22 168:1,1 169:9
underlayer 86:4
underlaying 79:12
underlined 95:6
underlying 79:12 85:14,21 86:4,10,14 87:5,10,17 88:23 89:22 90:13 97:2
understand 8:19 23:8 29:4 30:3,9 35:4 37:5 38:9 40:15 42:3,16 52:10,13,19 63:17,22 72:9 78:3 87:25 101:11 107:20 112:22,25 116:13 123:18 133:22 138:17 143:12 147:17 149:2 158:2 165:11
understanding 7:4 27:17,20 29:10 33:16 52:3 57:25 59:3 79:6 83:14 102:4 105:22 107:8 123:4,14 124:5 124:9 132:19 133:12,16 146:11,13 158:7
understands 39:19
understood 30:19 31:12,15 63:7 136:11 138:4,13 139:9 140:7
undoubtedly 141:15
unimpeded 153:16,21 154:6,17,25
united 1:3 2:1 5:18
unused 26:5
unwanted 102:8
unwilling 76:24
upward 83:3
urquhart 3:11
us2002/0140... 4:15 86:23

usage 82:5
use 23:5 26:8 71:15 87:12 96:24 105:12 118:10 122:1 135:10 146:3 154:24
used 26:13 28:24 42:25 54:19 73:5 87:13,13 93:14 94:21 95:12 96:2 98:4 100:3 105:16 106:4,5 116:9 116:9 122:8,17 137:8 157:19 158:12
useful 74:19
using 5:22 22:14 23:2 25:14,22 99:20 123:20 124:2 124:16 125:11
uspto 12:15
usually 24:15 25:9 109:16 117:17
uv 81:6 127:16 127:23 128:3 128:12,17,17 128:21 129:3,4 130:1,19 131:17,19,22 133:3,7,19,24 134:11,17,18
uva 131:15,17

v

v 170:4
vapor 55:1,6,10 55:14,23 56:13 57:9,15 58:6
vaporation 45:11
vaporization 50:2 51:10 53:22 56:5,20 56:24 57:2,19 57:19,25 58:3 58:14,24 59:21 59:21 60:9
vaporized 54:5 57:8,23,24 58:2
various 20:11 20:14 21:19 23:24 88:10 117:6
vary 121:2,3 132:14
velocity 19:24 116:15,19,21
verify 111:16
veritext 5:23,25 170:7,9,11,20
versus 5:17 8:15,23 101:19
vertical 83:3
viable 39:11
video 5:5,12 26:17,21 27:1 48:6,10,15 66:14,23 104:17 125:24 126:10,15 155:6,10,15 167:5
videographer 3:21 5:24 104:12
videotaped 1:17 2:14
view 42:5 53:11 53:13 59:21 64:23 65:2,2 71:12 73:18 77:8 82:12 90:6 112:11 124:17 143:4 148:19 150:7 166:6
vinegar 45:25
virtual 5:22
virtually 5:8
virtue 58:13,24
visible 128:20 128:20 129:5 132:13 133:20 133:23 134:2 134:20
voids 112:9
voltage 22:6 159:23
volume 1:20 2:15 170:5
vs 1:11 2:7

w

wafer 90:8,14
waived 170:24 170:24
waiving 170:21
walls 92:13
want 12:8 29:14 37:22 53:20 67:2,11 71:17 75:3 103:4,5,9 104:6,21 114:10 126:1 126:19 135:5 148:3 155:19 161:3 166:20
waste 71:17 82:20
water 47:23 48:1
wattage 22:7
wave 128:8
wavelength 128:9 131:19 131:20,22 132:1,4,4,23,25 133:5,7 135:1 140:17 152:10 152:11,12,18 152:19,20,20 152:23 153:3,4 153:5

wavelengths 128:8 131:4,5
way 24:23 50:21 57:3 70:7 74:11 81:7,22 108:2 115:17 116:8,9 134:4 141:5 143:23 144:6 148:2 153:25 160:13 169:15
ways 93:22
we've 103:7
weaver 89:1 90:1 91:9,18
wednesday 1:19 2:17 5:1
went 132:6,7 152:17
whereof 169:17
wide 28:9
window 154:2 154:2,4,5 155:2
wish 29:1 47:12 57:22 116:11 119:14 121:21
withdraw 166:19,25
witness 4:2 5:11 9:1 10:5 10:14,21 14:5 14:11,24 16:2 16:14 17:10,21 18:17,18 20:4 22:11,19 23:8 23:21 24:8 27:20 28:5 29:14 30:7,18 31:1,8 32:4,14 33:1,9,14,22 34:6,12,17,25 36:5,23 38:7 38:21 41:7,12 42:7,16 43:9 43:16 44:5 45:20 46:3,17 47:3,21 49:15 51:22 52:18 53:6,17 54:16 54:24 55:18 56:7 57:2,21 59:3,13,20 60:3 61:5 62:2 62:14 63:7 64:13 65:1,8 65:23 66:6 68:17 69:1,12 69:22 70:7,16 71:2,12,24 72:9 73:1,18 74:5,19 75:10 75:23 76:9,18 77:5,7,20 78:3 78:13 79:10 80:1 81:12,18 82:4,16,25 83:17,22 84:18 85:4,25 86:13 87:7,12,19,25 88:25 89:17,25 90:17 91:8 92:3 93:24 96:6 97:23 98:18 99:17 101:22 102:4 102:16 103:10 103:15,17 104:1 106:4,19 106:25 107:12 108:15 109:1 111:9 113:21 114:16,25 115:17 117:11 120:8 123:23 124:5 125:14 128:7 129:12 129:22 130:10 130:16 131:3 133:11 135:17 136:22 137:5 138:3,20 139:18 140:5 141:4,25 143:11 144:2 145:1,22 147:22 149:7 149:20 150:7 151:10 153:21 156:4,13 157:7 157:17 158:2 166:9 168:10 169:17 170:13 170:16 171:2,5
word 29:6 54:24 55:21 73:13 83:20 87:12,13 95:6 105:13
wording 54:11 59:20 60:8 142:14
words 42:24 57:22 59:13 105:18 115:11 119:9 134:2
work 15:19 17:16 18:15,24 19:2 21:4 24:2 25:8 143:16 160:10
worked 16:2,4 16:5,21,23 17:1,3,24 18:11 21:3
write 7:25 8:3 10:19 89:1
written 8:7,9 9:22,25 25:2
wrote 8:2,5,11 8:15,16 10:2 10:12

x

x 4:1 54:13,14 54:17,17 55:19 55:19,20 171:9

y

y 54:14,14,16 54:17 55:18,19 55:19
yager 3:21 5:22
yeah 26:2 62:7 89:11 94:15 103:23 104:5 166:23
years 16:3,5,21 16:23 25:18 26:13
york 1:18 2:16 5:1

z

z 97:18
zinc 35:12
zno 35:12
zone 110:24 111:5,12,21 112:1
zoom 1:17 2:14

Federal Rules of Civil Procedure

Rule 30

(e) Review By the Witness; Changes.

(1) Review; Statement of Changes. On request by the deponent or a party before the deposition is completed, the deponent must be allowed 30 days after being notified by the officer that the transcript or recording is available in which:

(A) to review the transcript or recording; and

(B) if there are changes in form or substance, to sign a statement listing the changes and the reasons for making them.

(2) Changes Indicated in the Officer's Certificate. The officer must note in the certificate prescribed by Rule 30(f)(1) whether a review was requested and, if so, must attach any changes the deponent makes during the 30-day period.

DISCLAIMER: THE FOREGOING FEDERAL PROCEDURE RULES ARE PROVIDED FOR INFORMATIONAL PURPOSES ONLY. THE ABOVE RULES ARE CURRENT AS OF APRIL 1, 2019. PLEASE REFER TO THE APPLICABLE FEDERAL RULES OF CIVIL PROCEDURE FOR UP-TO-DATE INFORMATION.

VERITEXT LEGAL SOLUTIONS

COMPANY CERTIFICATE AND DISCLOSURE STATEMENT

Veritext Legal Solutions represents that the foregoing transcript is a true, correct and complete transcript of the colloquies, questions and answers as submitted by the court reporter. Veritext Legal Solutions further represents that the attached exhibits, if any, are true, correct and complete documents as submitted by the court reporter and/or attorneys in relation to this deposition and that the documents were processed in accordance with our litigation support and production standards.

Veritext Legal Solutions is committed to maintaining the confidentiality of client and witness information, in accordance with the regulations promulgated under the Health Insurance Portability and Accountability Act (HIPAA), as amended with respect to protected health information and the Gramm-Leach-Bliley Act, as amended, with respect to Personally Identifiable Information (PII). Physical transcripts and exhibits are managed under strict facility and personnel access controls. Electronic files of documents are stored in encrypted form and are transmitted in an encrypted

fashion to authenticated parties who are permitted to access the material. Our data is hosted in a Tier 4 SSAE 16 certified facility.

Veritext Legal Solutions complies with all federal and State regulations with respect to the provision of court reporting services, and maintains its neutrality and independence regardless of relationship or the financial outcome of any litigation. Veritext requires adherence to the foregoing professional and ethical standards from all of its subcontractors in their independent contractor agreements.

Inquiries about Veritext Legal Solutions' confidentiality and security policies and practices should be directed to Veritext's Client Services Associates indicated on the cover of this document or at www.veritext.com.

IN THE UNITED STATES DISTRICT COURT
FOR THE EASTERN DISTRICT OF TEXAS
MARSHALL DIVISION

PICTIVA DISPLAYS INTERNATIONAL LTD. Plaintiff, v. SAMSUNG ELECTRONICS CO. LTD., and SAMSUNG ELECTRONICS AMERICA, INC., Defendants.	Civil Action No. 2:23-cv-00495-JRG JURY TRIAL DEMANDED

DECLARATION OF DR. E. FRED SCHUBERT

Exhibit
0001

Pictiva EX2016
Samsung v Pictiva
IPR2024-01095

TABLE OF CONTENTS

I. Introduction 1

II. Qualifications and Experience 2

III. Legal Standards 5

IV. Level of Ordinary Skill in the Art 8

V. ’389 Patent Terms 11

A. “upon said devices” (cl. 34) and “upon said mask and said plurality of devices” (cl. 41) 11

B. “planarization layer” 15

C. “selectively depositing” 17

D. “depositing at least one planarization layer upon said mask and said plurality of devices; removing said mask from said substrate” 21

VI. ’547 Patent Terms 24

A. “an organic layer sequence which emits an electromagnetic radiation having a first wavelength spectrum during operation” 24

B. “the filter layer is transparent to the electromagnetic radiation having the first wavelength spectrum” 28

C. “a filter layer which is at least partially opaque to an electromagnetic radiation having a third wavelength spectrum which corresponds to at least one part of the second wavelength spectrum” 34

D. “an encapsulation one of disposed upstream and disposed downstream” 39

VII. ’223 Patent Terms 40

A. “metal complex” 40

B. “wherein the organic compound coordinates to the metal complex due to the joint vaporization” 44

C. “coordinate[s]” 46

D. “chain-like structure” 50

E. “network-like structure” 51

Pictiva EX2016
Samsung v Pictiva
IPR2024-01095

F. "degree of cross-linking of the electron-conducting layer" 52

VIII. '164 Patent Terms 55

A. "matrix" 55

B. "matrix material" 57

C. "charge carrier mobility" 59

D. "A method for the production of an electronic device according to claim 1, comprising the steps of:" 62

IX. '492 Patent Terms 63

A. "applied in a structured fashion" and "applying . . . in a structured fashion" 63

B. "optoelectronic component" 65

C. "passive electronic component" 69

D. "plurality of capacitors and/or resistors" 71

E. "a resistance region . . . which has a taper in a direction parallel to the electrically conductive layers" 73

F. "second trench" and "third trench" 77

G. "applying an electrically conductive electrode layer in a structured fashion to the dielectric above the first contact region and to the second contact region"; "an electrically conductive electrode layer, which is applied in a structured fashion to the dielectric above the first contact region and to the second contact region"; "an electrically conductive electrode layer, which is applied in a structured fashion on the dielectric above the first contact region and at least partly on the second contact region" 80

X. '425 Patent Terms 85

A. "the organic layer sequence comprises at least one radiation-emitting region configured to generate electromagnetic radiation in a spectral range from infrared radiation to UV radiation during operation" 85

B. "encapsulation" 88

Pictiva EX2016
Samsung v Pictiva
IPR2024-01095

I, Dr. E. Fred Schubert, declare as follows:

I. Introduction

1. I am qualified and authorized to attest to the matters set forth in this declaration. I have knowledge of the facts set forth in this declaration based on my own personal information or investigation into the relevant subject matter.

2. I have been retained as an expert to provide opinions regarding the understanding of a person of ordinary skill in the art in connection with certain terms in the claims of U.S. Patent Nos. 6,949,389 (the "'389 patent"), 8,314,547 (the "'547 patent"), 8,558,223 (the "'223 patent"), 8,723,164 (the "'164 patent"), 9,257,492 (the "'492 patent"), and 11,828,425 (the "'425 patent") (collectively, the "asserted patents").

3. I am being compensated at my usual hourly rate of $525 per hour. I am also being reimbursed for any out-of-pocket expenses. I have no financial interest in, or affiliation with, any party in this case. My compensation does not depend in any way on the outcome of this case, the substance of my testimony, or opinions that I express.

4. In rendering my opinions, I have considered the asserted patents, their file histories, the parties' claim construction disclosures, and any other documents referenced, discussed, or listed in my declaration, and my own knowledge and experience in the relevant fields. I have also reviewed the productions associated with the claim construction disclosures in this case.

5. My analysis of the materials produced in this matter is ongoing and I will continue to review any new material as it is provided. This declaration represents only those opinions I have formed to date. I reserve the right to amend or supplement my opinions based on additional documents or evidence I am presented, including without limitation any arguments or expert declarations advanced by the plaintiff in this case.

Pictiva EX2016
Samsung v Pictiva
IPR2024-01095

II. Qualifications and Experience

6. I have extensive experience in the design and implementation of flat panel display devices, including the design, fabrication, processing, and packaging of the light emitting diodes (LEDs), transistors, capacitors, electrodes and semiconductor materials that are commonly used in LED displays and organic LED (OLED) displays.

7. I am currently an active tenured full professor in the Department for Electrical, Computer, and Systems Engineering at the Rensselaer Polytechnic Institute ("RPI") located in Troy, New York.

8. I have also held additional positions at RPI. For example, from 2002 to 2012, I was a professor in the Department of Physics, Applied Physics, and Astronomy. From 2008 to 2009, I served as the founding director of RPI's Engineering Research Center for Smart Lighting, which was funded by the National Science Foundation (NSF).

9. Before I moved to RPI, from 1995 to 2002, I was a professor in the Department of Electrical and Computer Engineering at Boston University. I also served as the director of Boston University's Semiconductor Devices Research Laboratory.

10. Prior to my university career, from 1985 to 1995, I was a post-doctoral member of the technical staff, member of the technical staff, principal investigator, and member of management at AT&T Bell Laboratories in Holmdel, New Jersey, and Murray Hill, New Jersey.

11. I earned my Ph.D. degree in 1986, Master of Science degree in 1981, and Bachelor's degree in 1978, all in Electrical Engineering, from the University of Stuttgart in Germany.

12. I have published over 300 technical articles, most at highly competitive refereed conferences and rigorously reviewed technical journals. These papers relate to active-matrix displays, LCDs, LEDs, OLEDs, semiconductor electronics (e.g., field-effect transistors, thin-film

Pictiva EX2016
Samsung v Pictiva
IPR2024-01095

transistors, and bipolar junction transistors), semiconductor lasers and photo-detectors. These technologies are the foundations of flat panel display devices such as OLED display devices.

13. During my tenure in industry (AT&T Bell Laboratories), I was part of a working group on flat-panel displays. I have also performed technical consulting services in the field of OLED displays and associated TFTs (thin film transistors). One project concerned the enhancement of the carrier mobility in amorphous and poly-crystalline silicon TFTs. I have also served as technical expert witness in cases that concerned OLED displays, including the architecture of OLED pixel circuits.

14. At RPI, I regularly teach courses on microelectronic devices (such as TFTs) and displays (such as OLED displays). Light emitting diodes (LEDs and OLEDs) are routinely used as back lighting sources and emissive-pixel sources, and I have worked on and developed LEDs for these applications.

15. I am the author or editor of several books. For example, I authored the textbook "Light-Emitting Diodes," 1st, 2nd, 3rd and 4th editions, published by Cambridge University Press, Cambridge, UK (1st and 2nd editions) and Google Books (3rd and 4th editions). In this book, I provide a comprehensive review of the state-of-art technologies for designing, fabricating, processing, and manufacturing LEDs, including OLEDs. This textbook is well-known in the field of LEDs and it is routinely used by researchers and engineers working on LEDs and OLEDs.

16. In addition to my research, I have been teaching for more than 20 years. I have taught numerous undergraduate and advanced graduate courses on display devices, light-emitting diodes, integrated optoelectronics, microelectronics technology, solid-state devices, and semiconductor devices. I have also advised close to 50 Ph.D. and M.S. students while at the RPI

Pictiva EX2016
Samsung v Pictiva
IPR2024-01095

and Boston University, in areas such as LEDs, TFTs, semiconductor electronics, semiconductor lasers, and solar cells.

17. I have been actively involved in multiple technical communities, including the American Physical Society (APS), Institute of Electrical and Electronics Engineers (IEEE), Optical Society of America (OSA), Society for Optical Engineering (SPIE). I have served in the organizing committees of many technical conferences, including, for example:

- Program committee member and chair of "Display and Solid-State Lighting Devices" conference for OSA/IEEE Conference on Lasers and Electro-Optics (CLEO), 2003 - 2005.
- Member of the International Advisory Committee of First International Conference on Display LEDs (ICDL), Seoul, Korea, January 31 - February 2, 2007.
- Sub-Committee Chair of Track 6: Displays, Solid-State Lighting, Photovoltaics, and Energy-Efficient Photonics of Asia Communications and Photonics Conference (ACP), Shanghai, China, November 11 - 14, 2014. ACP is the largest and the most influential conference in Asia and Pacific Rim for communications and photonics technologies.

18. My research has been recognized by multiple organizations, universities, and institutions. The following is a set of honors and awards that I have received:

- Elected Fellow of the IEEE in 1999. According to the IEEE definition, "the grade of Fellow is one of unusual professional distinction conferred by the Board of Directors only upon a person of extraordinary qualifications and experience."
- Elected Fellow of the SPIE in 1999. According to the Society's bylaws, a Fellow "shall be distinguished through his achievements and shall have made outstanding contributions in the field of optics, or optoelectronics, or in a related scientific, technical, or engineering field."
- Elected Fellow of the OSA in 2001. OSA Fellows are elected by the OSA Board of Directors.
- Elected Fellow of the APS in 2001.
- Honored with RPI Medal as Senior Constellation Chair in 2002.

Pictiva EX2016
Samsung v Pictiva
IPR2024-01095

- Recipient of "Scientific American 50 Award" of 2007, as published in the January 2008 issue of Scientific American.
- Received "2008 Rensselaer Polytechnic Institute Trustee Faculty Achievement Award" in 2002, 2008, and 2012.

19. Additional details about my employment history, fields of expertise, and publications are further included in my attached curriculum vitae.

III. Legal Standards

20. I am not a lawyer, and I do not intend to offer any opinions as to the interpretation of the law. However, I have a general understanding of claim construction based on my experience with patents and my conversations with counsel.

21. I am informed that a patent may include two types of claims, independent claims and dependent claims. An independent claim stands alone and includes only the limitations it recites. A dependent claim can depend from an independent claim.

22. I am informed that claim construction is a matter of law to be decided by the Court. I understand that claim terms are presumed to have their plain and ordinary meaning, as understood by a person of ordinary skill in the art at the time of the invention, in the context of the patent specification, the prosecution history, and any other relevant evidence.

23. I am informed that to determine how a person of ordinary skill in the art would understand a claim term, one should look to those sources available that show what a person of skill in the art would have understood the disputed claim language to mean. Such sources include the words of the claims themselves, the remainder of the patent's specification, the prosecution history of the patent and the cited references (all considered "intrinsic" evidence), and "extrinsic" evidence, such as dictionary definitions, learned treatises and the opinions of qualified experts concerning relevant scientific principles, the meaning of technical terms, and the state of the art.

Pictiva EX2016
Samsung v Pictiva
IPR2024-01095

24. I am informed that, in construing a claim term, one looks primarily to the intrinsic patent evidence, including the words of the claims themselves, the remainder of the patent specification, and the prosecution history.

25. I am informed that extrinsic evidence, which is evidence external to the patent and the prosecution history, may also be useful in interpreting patent claims when the intrinsic evidence itself is insufficient.

26. I am informed that words or terms should be given their ordinary and accepted meaning unless it appears that the inventors were using them to mean something else. In making this determination, the claims, the patent specification, and the prosecution history are of paramount importance. Additionally, the specification and prosecution history must be consulted to confirm whether the patentee has acted as its own lexicographer (i.e., provided its own special meaning to any disputed terms), or intentionally disclaimed, disavowed, or surrendered any claim scope.

27. I understand that a person of ordinary skill in the art is deemed to read a claim term not only in the context of the particular claim in which the disputed term appears, but in the context of the entire patent, including the specification. For this reason, the words of the claim must be interpreted in view of the entire specification. The specification is the primary basis for construing the claims and provides a safeguard such that correct constructions closely align with the specification. Ultimately, the interpretation to be given a term can only be determined and confirmed with a full understanding of what the inventors actually invented and intended to envelope with the claim as set forth in the patent itself.

28. I understand that while intrinsic evidence is of primary importance, extrinsic evidence, *e.g.*, all evidence external to the patent and prosecution history, including expert and

inventor testimony, dictionaries, and learned treatises, can also be considered. For example, technical dictionaries may help one better understand the underlying technology and the way in which one of skill in the art might use the claim terms. Extrinsic evidence should not be considered, however, divorced from the context of the intrinsic evidence. Evidence beyond the patent specification, prosecution history, and other claims in the patent should not be relied upon unless the claim language is ambiguous in light of these intrinsic sources. Furthermore, while extrinsic evidence can shed useful light on the relevant art, it is less significant than the intrinsic record in determining the legally operative meaning of the claim language.

29. I understand that, through the patent claims, an applicant must particularly point out and distinctly claim the subject matter which it regards as its invention. I understand that a patent is invalid for indefiniteness if its claims, read in light of the specification delineating the patent, and the prosecution history, fail to inform, with reasonable certainty, those skilled in the art about the scope of the invention.

30. I understand that an applicant's arguments in the prosecution history that objectively convey to one of skill in the art that certain subject matter that is not included within the claimed invention can be used in litigation to restrict the scope of the claims. I understand that this doctrine of prosecution history disclaimer promotes the public notice function of the intrinsic evidence and protects the public's reliance on definitive statements made during prosecution. I understand that prosecution history disclaimer can arise from both claim amendments and arguments made to the PTO. I understand that any such disclaimer must be both clear and unmistakable to one of ordinary skill in the art.

Pictiva EX2016
Samsung v Pictiva
IPR2024-01095

IV. Level of Ordinary Skill in the Art

31. I understand that the claims must be understood from the perspective of a person of ordinary skill in the art at the time of the alleged inventions. I also understand that to determine the level of skill of a person of ordinary skill in the art, one must consider several factors including the types of problems encountered in the art, the solutions to those problems, the rapidity with which innovations are made, the sophistication of the technology, and the education level of active workers in the field.

32. In my opinion, a person of ordinary skill in the art ("POSITA") relevant to the asserted patents at the time of the invention would have at least the following qualifications.

33. A POSITA at the time of the alleged invention of the '389 patent would have had a bachelor's degree in Electrical Engineering, Materials Science, or a related field, and at least one year of experience in display technologies. Additional education might compensate for a deficiency in experience, and vice-versa. I understand that this is the level of ordinary skill in the art proposed by SDC and Dr. Subramanian in IPR2024-01222 and IPR2024-01223, and is agreeable to me.

34. A POSITA at the time of the alleged invention of the '547 patent would have a bachelor's degree in electrical engineering, physics, or a comparable field of study, and at least three years of research or industrial experience with semiconductor (organic or inorganic) optoelectronic devices and/or lighting or displays. An individual with additional education could have less research or industrial experience and vice versa. I understand that this is the level of ordinary skill in the art proposed by SDC and Dr. Eden in IPR2024-00855, and is agreeable to me.

35. A POSITA at the time of the alleged invention of the '223 patent would have had a university degree in chemistry and additional expertise or a second university degree in the field

Pictiva EX2016
Samsung v Pictiva
IPR2024-01095

of electrical engineering, particularly optoelectronics, or alternatively a university degree in electrical engineering and additional expertise or a second university degree in the field of chemistry. The person of ordinary skill in the art has spent several years studying the structure and function of organic optoelectronic components, in particular OLEDs, and has detailed knowledge of the chemical structure of light-emitting organic layers and the transport of charge carriers to these layers. In this respect, the person of ordinary skill in the art works at the interface between electrical engineering/physics (charge carrier transport and light emission processes in optoelectronic components) and chemistry, in particular organic chemistry (materials and layer stack combinations suitable). I understand that this is the level of ordinary skill in the art proposed by SDC and Dr. Rand in IPR2024-001094, and is agreeable to me.

36. A POSITA at the time of the alleged invention of the ’164 patent would have had a Bachelor’s degree in chemistry, physics, or a comparable field of study, and at least three years of research or industrial experience with organic optoelectronic light-emitting devices. An individual with additional education could have less research or industrial experience and vice versa. I understand that this is the level of ordinary skill in the art proposed by SDC and Dr. Holmes in IPR2024-01093, and is agreeable to me.

37. A POSITA at the time of the alleged invention of the ’492 patent would have had a bachelor’s degree in Electrical Engineering, Physics, or a comparable field of study, and at least three years of research or industrial experience with semiconductor (organic or inorganic) optoelectronic devices and/or lighting or displays. An individual with additional education could have less research or industrial experience and vice-versa. I understand that this is the level of ordinary skill in the art proposed by SDC and Dr. Kattamis in IPR2024-01187, and is agreeable to me.

Pictiva EX2016
Samsung v Pictiva
IPR2024-01095

38. A POSITA at the time of the alleged invention of the ’425 patent would have had a Bachelor’s degree in chemistry, physics, or a comparable field of study, and at least three years of research or industrial experience with organic optoelectronic light-emitting devices. An individual with additional education could have less research or industrial experience and vice versa. I understand that this is the level of ordinary skill in the art proposed by SDC and Dr. Holmes in IPR2024-01095, and is agreeable to me.

39. I meet each of these criteria and consider myself a person with at least ordinary skill in the art pertaining to each of the asserted patents. I would have been such a person at the time of the invention of each of the asserted patents.

40. I applied these levels of skill of a person of ordinary skill in the art for purposes of my analysis in this declaration.

41. The opinions that I express in this declaration would not change if the appropriate level of ordinary skill in the art was ultimately determined to be slightly higher or lower than what I have listed above. Additionally, I reserve the right to respond to any differing level of ordinary skill in the art offered by Pictiva or its experts.

V. ’389 Patent Terms

A. “upon said devices” (cl. 34) and “upon said mask and said plurality of devices” (cl. 41)

Term	Pictiva’s Construction	Samsung’s Construction
“upon said devices” (cl. 34)	plain and ordinary meaning to a person of ordinary skill in the art in light of the specification, that is, “upon the earlier-mentioned devices”	“directly on said devices”
“upon said mask and said plurality of devices” (cl. 41)	plain and ordinary meaning to a person of ordinary skill in the art in light of the specification, that is, “upon the earlier-mentioned masks and the earlier-mentioned multiple devices”	“directly on both said mask and said plurality of devices”

42. In my opinion, based on my reading of the patent and prosecution history as a whole, and based on my knowledge as a POSITA, a POSITA would understand “upon said devices” in claim 34 to mean “directly on said devices” and would understand “upon said mask and said plurality of devices” in claim 41 to mean “directly on both said mask and said plurality of devices.” This is based on the use of the word “upon” in the patent and in the prosecution history.

43. Claim 34 requires “selectively depositing at least one planarization layer upon said devices”; claim 41 requires “depositing at least one planarization layer upon said mask and said plurality of devices.” Thus, both claims require depositing planarization layer “upon” “devices.”

44. A POSITA would have the above understanding of “upon” based on the use of “upon” in the patent specification. For example, the patent references, for an embodiment, an “organic layer” that is “deposited upon the OLED devices,” where that layer is referenced as the “layer over the OLED devices,” indicating that “upon” means “directly on” in this context. See

’389 patent at 4:56-58 (“Once the organic layer is deposited upon the OLED devices, UV-light is used to selectively cure the layer over the OLED devices to produce the desired cross-linking.”).

45. During the prosecution history, the patent applicants addressed the term “upon,” and they made clear that “upon” a device means that the planarization layer is “directly on” the device, as opposed to being merely above a device.

46. The applicants for the ’389 patent addressed the term “upon said devices” in their November 18, 2003 response to an office action. The applicants stated: “Claims 1, 10-12, 19-21, 25-27, 34 are rejected under 35 U.S.C. §102(b) as being anticipated by U.S. Patent No. 5,703,433 by *Fujii* et al. *(‘Fujii’)*.” *Id.* at 13. The applicants then sought to overcome this rejection by asserting that the disclosure in *Fujii* does not constitute “depositing at least one planarization layer upon said devices.” Specifically, the applicants asserted:

> “Applicants submit that *Fujii* does not disclose ‘depositing at least one planarization layer upon said devices’. In *Fujii,* the photoresist 4 is deposited on barrier ribs 2. See column 4, lines 30-33. The barrier ribs 2 are not devices but rather, the barrier ribs 2 are insulating separators that separate plasma pixels. The electrode 9 and the fluorescent substance 3 together may comprise a device, however, the barrier ribs 2 are not devices. In Applicant's specification at, for example, page 6, lines 29-31, devices are described as, for example, active areas on a substrate; in addition, on page 7, lines 3-5, devices are described as, e.g., an OLED display, an organic detector, or an organic solar cell. Since the photoresist 4 is deposited on the barrier ribs 2, *Fujii* does not disclose ‘depositing at least one planarization layer upon said <u>devices</u>’ underline added) as recited in claim 1.”

Id. at 13.

47. The applicants of the ’389 patent thus asserted that *Fujii* did not include depositing a planarization layer “upon said devices” because, according to the applicants, the relevant layer in *Fujii* (the “photoresist 4”) was deposited “on barrier ribs 2” and ***not*** “upon” the relevant devices (which the applicants indicated could be the “electrode 9 and the fluorescent substance 3”).

Pictiva EX2016
Samsung v Pictiva
IPR2024-01095

48. The relevant disclosures in *Fujii* make clear that the applicants of the ’389 patent asserted that a planarization layer that is merely ***above*** a device is not “upon” that device; rather, the planarization layer is only “upon” the thing on which it is directly on.

49. The relevant disclosures in *Fujii*—primarily USPN 5,703,422 4:10-33—address *Fujii* Figures 1A and 1B, below:

FIG. 1A

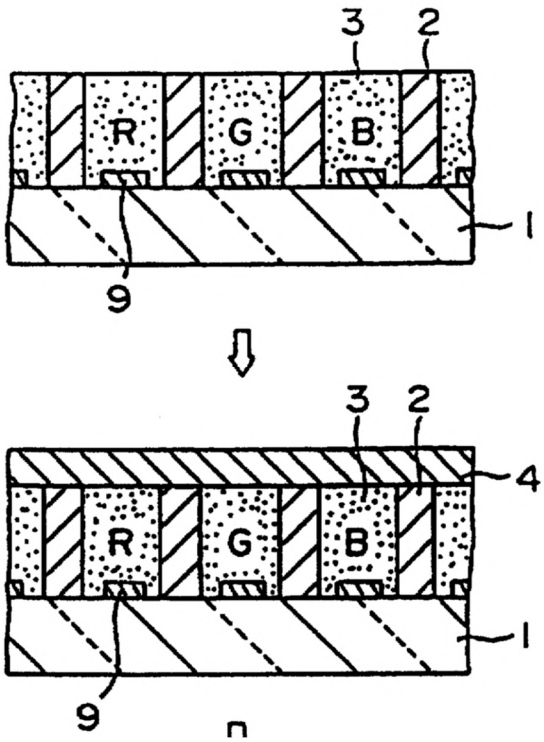

FIG. 1B

50. The relevant “planarization layer” is labeled 4 in Figure 1B, above, and the applicants of the ’389 patent contend that “[s]ince photoresist 4 is deposited on barrier ribs 2, *Fujii* does not disclose ‘depositing at least one planarization layer upon said devices” (emphasis in original), where “[t]he electrode 9 and the fluorescent substance 3 together may comprise a device.”

51. While Figure 1B, above, appears to indicate that photoresist 4 (the planarization layer) is directly on both the barrier rib 2 and the device (9 and 3 together), the discussion in *Fujii*

Pictiva EX2016
Samsung v Pictiva
IPR2024-01095

makes clear that this is not the case. Specifically, *Fujii* states that, in Figure 1A, "discharging spaces defined by barrier ribs 2 which have been formed on a glass substrate (rear plate) 1 are filled with three types of pastes of fluorescent substances 3 for red (R), green (G), and blue (B) colors." '422 patent 4:18-22. *Fujii* states: "Next, the fluorescent pastes 3 are dried so as to remove a solvent contained in an organic binder thereof." *Id.* 4:27-29. As made clear by this language, and other associated disclosures throughout the *Fujii* patent, a POSITA would understand that this evaporation step causes the paste, labeled as 3, to lose volume such that the substance after evaporation remains on the barrier ribs (2) and the substrate (1) but the substance no longer fills the discharge spaces (the cavities holding the material) up to the top of the cavities. Next, *Fujii* states: "Then, the substrate 1 is heated at a temperature in the range from 50° to 80° as shown in FIG. 1(b). Thereafter, a light-hardening type dry film (OSBR film made by Tokyo Ouka Kogyo Kabushiki Kaisha) is laminated on the substrate 1 as a photoresist 4."

52. Thus, while the applicable "planarization layer" in *Fujii* (the photoresist 4 in Figure 1B) is directly on the barrier ribs 2, it is not directly on the relevant "device" (components 3 and 9 together) because the substance labeled 3 does not fill the entire cavity that photoresist 4 covers. However, as shown by Figure 1B, the relevant planarization layer (4) is above the relevant device (3), and there are no intervening layers (other than some empty space) between the planarization layer and the relevant device. Thus, by asserting that photoresist 4 is not deposited upon the device (3 and 9, together), but photoresist 4 is deposited upon barrier rib 2, the applicants of the '389 patent made clear that the claim term "deposited upon said devices" means "deposited directly on said devices."

Pictiva EX2016
Samsung v Pictiva
IPR2024-01095

B. <u>"planarization layer"</u>

Claims	Pictiva's Construction	Samsung's Construction
34, 35, 41, 46	plain and ordinary meaning to a person of ordinary skill in the art in light of the specification, that is, a layer that can provide a planar surface	"a layer of material that planarizes such that the propagation of defects from one layer to another layer is interrupted and the topography of the underlying layer is not reproduced."

53. Based on my read of the patent and prosecution history and based on my understanding as a POSITA, a POSITA would understand the term "planarization layer" in claims 34, 35, 41, and 46 to mean: "a layer of material that planarizes such that the propagation of defects from one layer to another layer is interrupted and the topography of the underlying layer is not reproduced."

54. As recognized by the patent itself, "planarization layer" was a well-understood concept in the art at the time of the alleged invention. *See, e.g.*, '389 patent at 1:17-37. Planarization layers have key attributes to a POSITA and the patent itself and the prosecution history of the '389 patent use the term "planarization layer" consistent with the well-understood meaning of that layer.

55. Notably, planarizing techniques in the art included a number of different approaches. For example, in one common planarization technique, material is removed from an underlying layer to make that underlying layer more planar; this approach of removing material to planarize is used in the context of the well-known technique called chemical mechanical planarization ("CMP"). However, the '389 patent makes clear that it utilizes only planarization performed by addition of material (the planarizing material) to an underlying layer to make the underlying layer more planar. That is, the intrinsic record of the '389 patent as a whole, including the specification and the claims, makes clear that the planarization layer claimed in the '389 patent is a layer of a particular planarizing material that is deposited on an underlying layer (as opposed

to, say, a layer that has become more planar through the removal of material). *See, e.g.*, '389 patent at 7:4-5 ("[G]enerally any printing techniques suitable to deliver the desired planarization layer material can be used."); 6:57-61 ("As organic layer 506 is deposited selectively; there may be no need to cure the layer. It should be appreciated that the cure and patterning aspects could be independent; —relating to the type of material and deposition technique of for [sic] the planarization layer.").

56. One characteristic of the "planarization layer" is that the layer of material planarizes. The '389 patent makes clear throughout that the material in the "planarization layer" acts to add a layer on top of another layer that makes the surface more "planar," or flatter. In the "Background" section, the patent states, regarding prior art (and referring to certain items in Figure 1): "Typically, for PML ['polymer multi-layer'] structures, a planarization layer 106 is formed on top of OLED structure 104. Planarization layer 106 typically is an organic layer (e.g. acrylate or the like) and is provided to give a planar surface for the deposition of the PML structure 112 a." '389 patent at 1:30-35. Creating a more planar surface on one layer in order to allow better deposition of a subsequent layer was a common technique in the art at the time of the alleged invention.

57. Another well-accepted characteristic of a planarization layer that goes hand in hand with planarizing is that the layer of material interrupts the propagation of defects from one layer to another layer. *See, e.g.,* '389 patent at 4:33-41 ("It should be appreciated that layer 304 could also be any suitable planarization layer. For example, an inorganic or hybrid planarization layer might also suffice as a buffer layer that has desirable planarizing and/or protecting properties from the barrier layer deposition process. . . . Such an organic layer might provide a planar structure on which to deposit a barrier layer and to substantially cover point defects (e.g. dirt particles) in lower

layers. It is generally desirable that the organic layer be deposited in sufficient quantity so that any such layer is no longer 'conformal' to the point defect—i.e. any point defects are not geometrically projected upwards into layers deposited above.").

58. A layer of material that does not have this smoothing over property is not a planarization layer. The applicants stated that a material cannot be a "planarization layer" where it is "not used to interrupt the propagation of defects from one layer to another layer." July 19, 2004 Response to Non-Final Rejection at 11 ("[T]his 'sealing material 20' is not a planarization layer since it is not used to interrupt the propagation of defects from one layer to another layer".). Thus, the claim term "planarization layer" in the '389 patent does not include materials that do not "interrupt the propagation of defects" in this way.

59. The applicants also stated "metals cannot be used as a planarization layers" because "[m]etals . . . that are evaporated onto a layer do not cover-up the imperfections of the underlying layer, but rather the metals reproduce the topography of the underlying layer." Nov. 24, 2003 Response to Non-Final Rejection at 16. Thus, the applicants made clear that the "planarization layer" they claimed could only encompass a layer that "cover[s]-up the imperfections of the underlying layer" and that does not "reproduce the topography of the underlying layer."

C. <u>"selectively depositing"</u>

Claims	Pictiva's Construction	Samsung's Construction
34, 35, 41	Plain and ordinary meaning to a person of ordinary skill in the art in light of the specification	"depositing a material in only desired areas, such that no additional processing must be performed for removing unwanted material."

60. The concept of "selectively depositing" comes up throughout the '389 patent, including in a number of claims and throughout the specification. The '389 patent, as its title states, is generally directed to "Encapsulation for organic light emitting diodes devices." The

Pictiva EX2016
Samsung v Pictiva
IPR2024-01095

patent explains: "Encapsulation is a way to protect the OLED device from the damaging environmental effects—primarily from oxygen and moisture." '389 patent at 1:8-9. The patent describes certain purported drawbacks of a certain type of prior-art encapsulation, known as "polymer multi-layer," or "PML:

> The problem with this PML technique is that the only part of the device that requires encapsulation is the OLED structure itself—and not, e.g., the electrical contact pads. In fact, the contact pad must typically be exposed for electrical mating with external driver circuitry. So, at a minimum, additional processing must be performed for the removal of the PML structure over these areas. . . . Another potential problem with the current PML techniques is that by having the PML layer over the scribe and break lines and/or the glue lines the integrity of the sealed package may be deteriorated, for example by delamination of the PML layer over these areas.

'389 patent at 2:17-29.

61. In other words, the patent describes certain drawbacks of a prior art approach in which an encapsulation structure covers the entire underlying layer rather than just certain parts of it.

62. The patent discloses several embodiments that purport to achieve, in different ways, the goal of encapsulating only portions of the underlying layer, and the claims reflect these distinctions. For example, the "Summary of the Invention" section of the patent describes an embodiment in which the planarization layer is deposited "selectively" ('389 patent at 5:2), and it describes another embodiment in which the "planarization layer is deposited as an unpatterned liquid film"; that latter embodiment then requires "removing said areas of unwanted planarization layer." *Id.* at 2:60-64. A POSITA would recognize this distinction as being reflected in the claims; for example, claims 25 and 34 are similar, except claim 34 requires "selectively depositing at least one planarization layer," whereas claim 25 requires "depositing" (not "selectively depositing") the planarization layer, and claim 25 further requires "wherein said planarization layer is deposited as

Pictiva EX2016
Samsung v Pictiva
IPR2024-01095

an unpatterned liquid film," and "removing said areas of unwanted planarization layer." Similarly, claim 1 is also somewhat similar to claim 34, but claim 1 requires "depositing" (not selectively depositing) the planarization layer, and claim 1 requires several additional steps, including "removing area of the at least one planarization layer that are not hardened." This embodiment is also generally described in the "Summary of Invention" section. '389 patent at 2:41-54.

63. The specification also implies that "deposited in a patterned fashion" constitutes "selective deposition." *See* '389 patent at 6:53-63 ("Organic layer **506** is deposited in a patterned fashion as well as barrier layer **508**. As organic layer **506** is deposited selectively; there may be no need to cure the layer."). As a POSITA, I understand "deposited in a patterned fashion" to require that deposition be done in certain areas but not others (as opposed to an "unpatterned deposition," in which a material is deposited indiscriminately).

64. Reading the claims in the context of one another, in light of the intrinsic record as a whole, it is my opinion that a POSITA would understand the claims and the disclosed embodiments in the '389 patent to distinguish between merely "depositing" a material and then later removing portions of that material that are in unwanted areas, and "selectively depositing," in which the material is deposited where desired in the first instance, and no later removal steps are needed. Specifically, in my opinion, a POSITA would understand "selectively depositing" in claims 34, 35, and 41, in the context of the intrinsic record as a whole, to mean "depositing a material in only desired areas, such that no additional processing must be performed for removing unwanted material."

65. Throughout the patent, where a material is deposited initially only where it is desired, the term "selective deposition" is used. On the other hand, where a process that can include deposition of a material followed by removal of material from areas where that material is

Pictiva EX2016
Samsung v Pictiva
IPR2024-01095

not wanted, the patent calls that "deposition" (and not "selective deposition"). Among other reasons, this understanding of "selectively depositing" is required to appreciate the differences between various claims, some of which use the term "depositing," by itself (in an unqualified manner), along with later steps to remove unwanted material, while other claims use the term "selectively depositing."

66. The specification's explanation of "selectively depositing" is consistent with this understanding. *See, e.g.*, '389 patent at 6:66-7:5 ("The manner of selectively depositing the organic layer and the barrier layer may be accomplished in a variety of ways. For example, organic layer may be selectively deposited though *[sic]* a shadow mask (as depicted as mask **510**) or by ink jet deposition or other screen printing techniques. In fact, generally any printing techniques suitable to deliver the desired planarization layer material can be used."). A shadow mask is used to define places where deposition is to occur. By referring to a shadow mask as an example of selectively depositing, the specification makes clear that deposition through a mask can allow for deposition to be "confined over desired areas." '389 patent at 7:41-46 ("The mask might be such that it could be brought into contact with the OLED sufficiently well so that the encapsulation organic is confined over the desired areas and does not seep under the areas where the encapsulation organic is not desired (e.g. contact pads)."). This is consistent with my understanding of deposition of a material through a shadow mask.

Pictiva EX2016
Samsung v Pictiva
IPR2024-01095

D. **"depositing at least one planarization layer upon said mask and said plurality of devices; removing said mask from said substrate"**

Claim	Pictiva's Construction	Samsung's Construction
41	plain and ordinary meaning to a person of ordinary skill in the art in light of the specification, that is, "depositing at least one planarization on the earlier-mentioned mask and the earlier-mentioned multiple devices; removing the earlier-mentioned mask from the earlier-mentioned substrate"	"depositing at least one planarization layer upon said mask and said plurality of devices; **then** removing said mask from said substrate" (emphasis added)

67. For claim 41 of the '389 patent, in my opinion, a POSITA would understand that the claim element "depositing at least one planarization layer upon said mask and said plurality of devices" must be performed before the claim element "removing said mask from said substrate" (i.e., the two steps must be performed in the order they appear in the claim). This understanding is required by the claim language itself, other disclosures in the patent, and a POSITA's understanding of the use of a mask to deposit a planarization layer.

68. In the '389 patent, the purpose of using a mask with respect to the planarization layer is to "selectively deposit" the planarization layer. *See* '389 patent at 6:66-7:3 ("The manner of selectively depositing the organic layer and the barrier layer may be accomplished in a variety of ways. For example, organic layer may be selectively deposited though a shadow mask (as depicted as mask **510**) or by ink jet deposition or other screen printing techniques.").

69. Regarding the relevant claim language: three steps in claim 41 use the word "mask." One of these steps references "a mask"; the other two steps reference "said mask." The two steps with the language "said mask" each reference an already-discussed mask, but the step that references "a mask" does not; thus, in my opinion, the step that merely references "a mask" would come first among these three steps. That is, the first mask-related step to be performed is:

Pictiva EX2016
Samsung v Pictiva
IPR2024-01095

"depositing a mask on top of said substrate, such that mask openings are placed on top of said devices." The next two steps listed in the claim—the other two mask-related steps—must be performed in the order they appear in the claim because, otherwise, the claim language would not make sense, and a POSITA would not understand a reasonably certain way to perform the claim.

70. The two options for sequencing the steps after "depositing a mask. . ." would be:

(A) "depositing at least one planarization layer upon said mask and said plurality of devices"

Then

"removing said mask from said substrate";

Or:

(B) "removing said mask from said substrate"

Then

"depositing at least one planarization layer upon said mask and said plurality of devices"

71. Option "B" would require "depositing a mask," then "removing said mask," then "depositing at least one planarization layer upon said mask." This sequence does not make sense: depositing then removing the mask (and doing nothing in between) would not accomplish anything technically meaningful; it would like be putting a stencil in place then removing the stencil, without applying any paint or ink to the stencil while it is in place. Further, interpreting the claim to require depositing a planarization layer "upon said mask" after that mask had been removed has no reasonably certain meaning to a POSITA because there is no indication of where the mask goes after it is removed, or what deposition is contemplated upon that removed (but unplaced) mask. Option "B" is also ambiguous grammatically because "depositing at least one planarization layer

Pictiva EX2016
Samsung v Pictiva
IPR2024-01095

upon ***said*** mask" (emphasis added) has an unclear antecedent where the earlier-discussed mask had already been removed.

72. On the other hand, option "A," above—performing the two steps in the order they appear in the claim—would follow the expected sequence, both technically an grammatically. Under Option "A," a mask is deposited; then a planarization layer is deposited "upon said mask"; then the mask is removed. This approach can achieve type of deposition over a mask contemplated throughout the patent.

73. In my opinion, this interpretation is also consonant with the related disclosures throughout the patent, and it is not inconsistent with any disclosures in the patent. For example, the patent references "the mask's removal after encapsulation organic deposition." '389 patent at 7:38-39. (The patent sometimes references the planarization layer as an "organic" layer. *See* '389 patent at 1:32-33 ("Planarization layer 106 typically is an organic layer. . . .")). *See also id.* at 7:57-60 ("Once deposited, then the organic layer may or may not be cured—either partially or completely prior to the removal of mask 604. The mask could be removed by any means known in the art—e.g. by peeling it off; mechanical removal if a stencil, and the like."); *id.* at 7:66-8:1 ("After the mask is removed, then barrier layer 608 is selectively deposited over the planarization layers covering the OLED devices."). There are no disclosures in the patent that suggest a contemplated approach would include depositing a mask, then removing that mask, then depositing a planarization layer on that mask.

Pictiva EX2016
Samsung v Pictiva
IPR2024-01095

VI. ’547 Patent Terms

A. “an organic layer sequence which emits an electromagnetic radiation having a first wavelength spectrum during operation”

Claims	Pictiva’s Construction	Samsung’s Construction
1	plain and ordinary meaning to a person of ordinary skill in the art in light of the specification, where, “a first wavelength spectrum” denotes a spectral distribution of electromagnetic radiation having a first spectral component(s) and relative intensities. No other parts require construction	“an active layer and electrodes which emits an electromagnetic radiation with a first wavelength spectrum which corresponds to the entire wavelength spectrum of the electromagnetic radiation emitted by the organic layer sequence during operation”

74. In my opinion, the term “an organic layer sequence which emits an electromagnetic radiation having a first wavelength spectrum during operation,” as used in the ’547 patent and as understood by a POSITA at the time of the alleged invention, refers to “an active layer and electrodes which emits an electromagnetic radiation with a first wavelength spectrum which corresponds to the entire wavelength spectrum of the electromagnetic radiation emitted by the organic layer sequence during operation.”

75. A POSITA at the time of the alleged invention would understand that “an organic layer sequence which emits an electromagnetic radiation is “an active layer and electrodes which emits an electromagnetic radiation” based on the ’547 patent specification. The ’547 patent specification states that “[t]he optoelectronic device has ***an organic layer sequence 1*** and ***an electrode 10 and an active region 11***. In this case, as explained in the general part of the description, ***the organic layer sequence 1 can have functional layers or layer sequences and is embodied as an OLED***, for example. In particular, the ***active region 11 of the organic layer sequence 1 is suitable for emitting electromagnetic radiation 15*** having a first wavelength spectrum.” ’547 patent at 10:5-12 (emphases added). The organic layer sequence is highlighted

in yellow and is identified as part 1 below with the electrodes outlined in red and identified as part 10 and the active region is outlined in blue and identified as part 11 as shown in Figs. 1A and 1B below:

Pictiva EX2016
Samsung v Pictiva
IPR2024-01095

FIG 1A

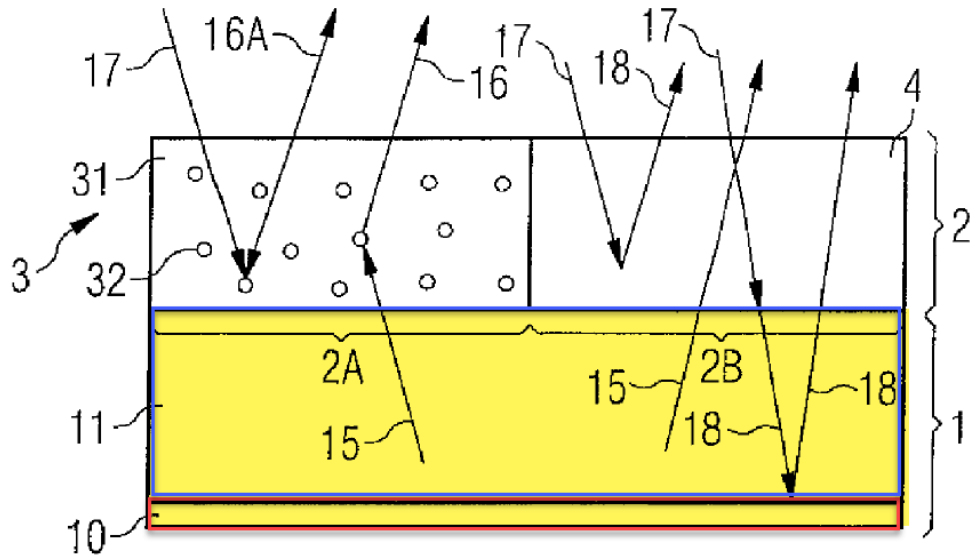

FIG 1B

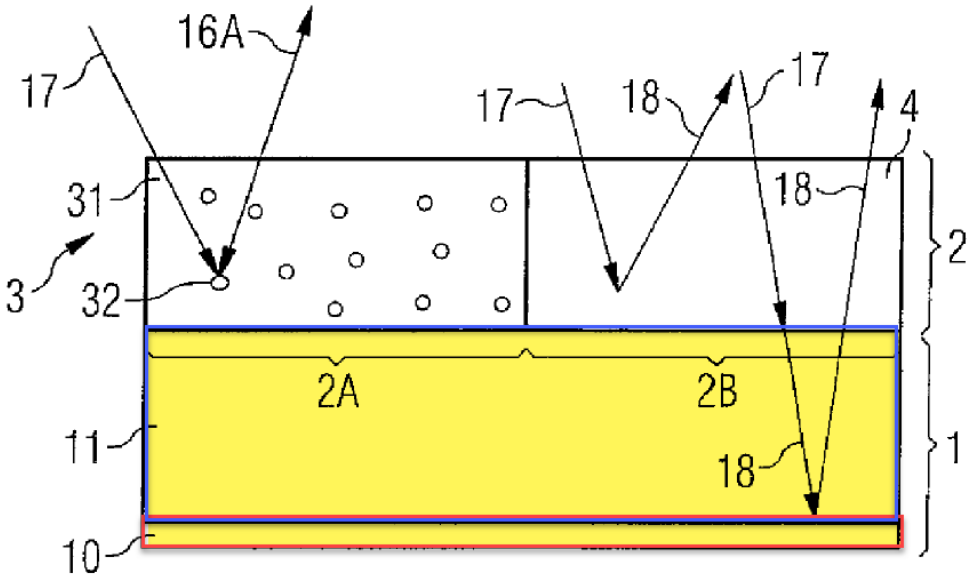

76. The ’547 patent distinguishes the organic layer sequence (part 1 in Figures 1A and 1B) from the “structured layer” (part 2 in Figures 1A and 1B) which include the wavelength

Pictiva EX2016
Samsung v Pictiva
IPR2024-01095

conversion and filter layers. ’547 patent at Abstract. A POSITA would understand from this description of the specification that “an organic layer sequence which emits an electromagnetic radiation” is “an active layer and electrodes which emits an electromagnetic radiation.”

77. Additionally, a POSITA would understand that the term “an organic layer sequence which ***emits an electromagnetic radiation having a first wavelength spectrum during operation***,” as used in the ’547 patent and as understood by a POSITA at the time of the alleged invention, refers to “an active layer and electrodes which ***emits an electromagnetic radiation with a first wavelength spectrum which corresponds to the entire wavelength spectrum of the electromagnetic radiation emitted by the organic layer sequence during operation***.” The electromagnetic radiation has a first wavelength spectrum that is the entire electromagnetic radiation emitted by the organic layer sequence during operation. A POSITA would understand that the electromagnetic radiation is the full emission during operation and not a subset or portion of the wavelength spectrum.

78. My opinion that “an organic layer sequence which ***emits an electromagnetic radiation having a first wavelength spectrum during operation***,” as used in the ’547 patent and as understood by a POSITA at the time of the alleged invention, refers to “an active layer and electrodes which ***emits an electromagnetic radiation with a first wavelength spectrum which corresponds to the entire wavelength spectrum of the electromagnetic radiation emitted by the organic layer sequence during operation***” is confirmed by the ’547 patent specification. For example, the ’547 patent specification states that “An optoelectronic device comprises ***an organic layer sequence (1), which emits an electromagnetic radiation (15) having a first wavelength spectrum during operation***….In this case, the first regions (2A) each have a wavelength conversion layer (3) designed to convert at least partially electromagnetic radiation (15) ***having***

Pictiva EX2016
Samsung v Pictiva
IPR2024-01095

the first wavelength spectrum into an electromagnetic radiation (16) having a second wavelength spectrum." '547 patent at Abstract. A POSITA would understand that the first wavelength spectrum during operation is the entire wavelength spectrum during operation.

79. I disagree with Pictiva's proposed construction. A POSITA would not understand "a first wavelength spectrum" denotes a spectral distribution of electromagnetic radiation having a first spectral component(s) and relative intensities. Pictiva's proposed construction would render this claim term meaningless, as the first wavelength spectrum could be a single spectral component, multiple spectral components, a single intensity or multiple intensities. A POSITA would understand the claimed first wavelength spectrum as being the entire wavelength spectrum—not a component or single intensity within the wavelength spectrum.

80. Thus, it is my opinion that a POSITA at the time of the alleged invention would understand "an organic layer sequence which emits an electromagnetic radiation having a first wavelength spectrum during operation" means "an active layer and electrodes which emits an electromagnetic radiation with a first wavelength spectrum which corresponds to the entire wavelength spectrum of the electromagnetic radiation emitted by the organic layer sequence during operation."

B. <u>"the filter layer is transparent to the electromagnetic radiation having the first wavelength spectrum"</u>

Claim	Pictiva's Construction	Samsung's Construction
1	plain and ordinary meaning to a person of ordinary skill in the art in light of the specification, where "transparent to an electromagnetic radiation having the first wavelength spectrum" Means "permitting an electromagnetic radiation having the first wavelength spectrum to pass through"; no other parts require construction	"the filter layer is transparent to the electromagnetic radiation having the first entire wavelength spectrum so it permits an electromagnetic radiation having the first wavelength spectrum to pass through in as unimpeded manner as possible"

81. In my opinion, the term "the filter layer is transparent to the electromagnetic radiation having the first wavelength spectrum," as used in the '547 patent and as understood by a POSITA at the time of the alleged invention, refers to "the filter layer is transparent to the electromagnetic radiation having the first entire wavelength spectrum so it permits an electromagnetic radiation having the first wavelength spectrum to pass through in as unimpeded manner as possible."

82. A POSITA at the time of the alleged invention would understand that "the filter layer is transparent to the electromagnetic radiation having the first wavelength spectrum" means "the filter layer is transparent to the electromagnetic radiation having the first entire wavelength spectrum so it permits an electromagnetic radiation having the first wavelength spectrum to pass through in as unimpeded manner as possible." A filter layer being transparent to a wavelength spectrum means that it is transparent to the entire wavelength spectrum. In order for the filter layer to be transparent to this entire wavelength spectrum, the filter layer needs to pass the emission in as unimpeded manner as possible. If the filter layer is impeding the emission by altering the spectral components, then it is not transparent. This is because, if the filter layer only partially passes through a portion of the wavelength spectrum or impedes the emission, then it is no longer transparent. Instead, the filter layer would be at least partially opaque.

83. My opinion that "the filter layer is transparent to the electromagnetic radiation having the first wavelength spectrum" means "the filter layer is transparent to the electromagnetic radiation having the first entire wavelength spectrum so it permits an electromagnetic radiation having the first wavelength spectrum to pass through in as unimpeded manner as possible" is confirmed by the '547 patent specification. For example, the '547 patent specification states that "the filter layer is designed to convert electromagnetic radiation having the third wavelength

Pictiva EX2016
Samsung v Pictiva
IPR2024-01095

spectrum into heat or thermal radiation, while ***electromagnetic radiation having the first wavelength spectrum can pass through the filter layer preferably in as unimpeded a manner as possible***. This means, in particular, that ***the electromagnetic radiation emitted by the organic layer sequence during operation remains substantially unaffected by the filter layer***." '547 patent at 3:55-62. Similarly, the '547 patent describes transparent as "the electromagnetic radiation 15 having the first wavelength can pass through the filter layer 4 in ***an unimpeded manner and substantially without any alternation of its spectral components***. To put it another way, the filter layer 4 ***is transparent to electromagnetic radiation 15 having the first wavelength spectrum***." *Id*. at 10:36-42. A POSITA would understand from these descriptions of transparent in the '547 patent specification that the filter layer is transparent to the electromagnetic radiation having the first entire wavelength spectrum so it permits an electromagnetic radiation having the first wavelength spectrum to pass through in as unimpeded manner as possible.

84. Additionally, a POSITA would understand from the '547 patent's disclosure that transparent to the electromagnetic radiation having the first entire wavelength spectrum means the emission passes through the filter in as unimpeded manner as possible, as the '547 patent refers to other filter layers as "at least partially opaque." For example, the '547 patent specification states "a ***filter layer***, which is ***at least partially opaque*** to an electromagnetic radiation having a third wavelength spectrum, which corresponds to at least one part of the second wavelength spectrum." '547 patent at 1:34-37. The '547 patent describes the non-transparent filter layer as a "filter layer [that] can be designed ***at least partially to absorb the electromagnetic radiation*** having the fourth spectrum." *Id.* at 9:3-5. A POSITA would understand that transparent means the emission passes through the filter in as unimpeded manner as possible, as partial absorption or blocking would not be "at least partially opaque" and not "transparent."

Pictiva EX2016
Samsung v Pictiva
IPR2024-01095

85. Additionally, a POSITA would understand a transparent filter must pass the entire first wavelength spectrum through the filter without alteration of its spectrum as the ’547 patent states “***‘partially’ denotes a partial spectrum of a spectrum, for example of the first spectrum***. In particular, the ***partial spectrum of a spectrum can consist of a part of the spectral components of this spectrum***. Furthermore, ***‘partially’ can also denote a part of an intensity of a spectrum or partial spectrum***.” ’547 patent at 2:40-45. A POSITA would understand from these disclosures in the ’547 patent that a transparent filter would not absorb or block a portion of or part of the spectral components of the first wavelength spectrum.

86. I disagree with Pictiva’s proposed construction. A POSITA would not understand “transparent to an electromagnetic radiation having the first wavelength spectrum” as meaning “permitting an electromagnetic radiation having the first wavelength spectrum to pass through.” Pictiva’s proposed construction fails to distinguish “transparent” from “at least partially opaque” which renders this limitation meaningless. Moreover, Pictiva’s proposed construction contradicts Pictiva’s statements to the U.S. Patent & Trademark Office. In its Preliminary Patent Owner Response, Pictiva described the ’547 patent’s disclosure of a filter layer that was transparent:

For instance, Figure 1A depicts an orgnaic layer sequence 1 that emits an electromangetic radiation 15 having a first wavelengh spectrum. EX1001, 10:9-12.

FIG 1A

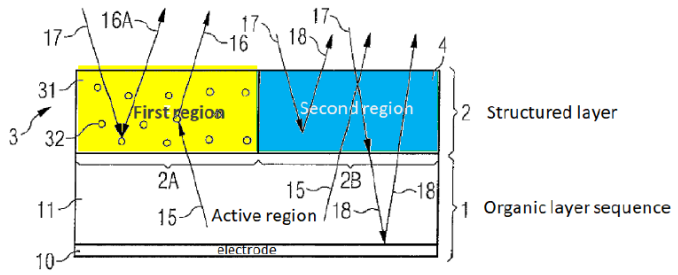

It further teache that

the electromagnetic radiation 15 having the first wavelength can pass through the filter layer 4 in an umimpeded manner and ***substanitally without any alternation of its spectral components***. To put it another way, the filter layer 4 ***is transparent to electromagnetic radiation 15 having the first wavelenght sepctrum***. EX1001, 10:36-42.

That is, being transparent to emission having a first wavelength spectrum implies the emission would pass through the filter "substantially without any alteration of its spectral components." *Id.* Figure 2 depicts the same.

FIG 2

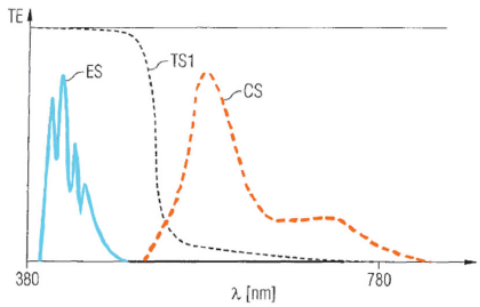

(Figs. 1A, 2, annotated)

In Figure 2, the blue curve depicts an "emission spectrum" of "***a spectral profile of the electromagnetic radiation 15 emitted by the organic layer sequence 1***." EX1001, 11:30-47. The orange CS curve depicts a conversion spectrum that "***represents the wavelength spectrum which is emitted by the wavelength conversion layer*** 3" (*i.e.*, emission having a second wavlength spectrum) that "comprises a yellow wavelength range and a red-green wavelength range, respectively." *Id.* "The curve designated by TS1 indicates a transmission spectrum of the filter layer 4." *Id.*

As Figure 2 shows, "the filter layer 4 is transmissive to blue light and thus to the electromagnetic radiation 15 [having a first wavelength spectrum] emitted by the organic layer sequence 1, while it is opaque to electromagnetic radiation having a yellow wavelength range and a red and green wavelength range [i.e., a third wavelenght spectrum which corresponds to at least one part of the second wavelength spectrum]." *Id.*

Pictiva EX2016
Samsung v Pictiva
IPR2024-01095

IPR2024-00855 POPR at 58-60.

87. Thus, it is my opinion that a POSITA at the time of the alleged invention would understand "the filter layer is transparent to the electromagnetic radiation having the first wavelength spectrum," as used in the '547 patent to mean "the filter layer is transparent to the electromagnetic radiation having the first entire wavelength spectrum so it permits an electromagnetic radiation having the first wavelength spectrum to pass through in as unimpeded manner as possible."

C. "a filter layer which is at least partially opaque to an electromagnetic radiation having a third wavelength spectrum which corresponds to at least one part of the second wavelength spectrum"

Claim	Pictiva's Construction	Samsung's Construction
1	plain and ordinary meaning to a person of ordinary skill in the art in light of the specification, where "at least partially opaque to an electromagnetic radiation" means "at least partially block an electromagnetic radiation"; and "second/third wavelength spectrum" means "spectral distribution of electromagnetic radiation having second/third spectral component(s) and relative intensities." No other parts require construction	"a filter layer which is not transparent to an electromagnetic radiation having a third wavelength spectrum which corresponds to at least one part of the second wavelength spectrum"

88. In my opinion, the term "a filter layer which is at least partially opaque to an electromagnetic radiation having a third wavelength spectrum which corresponds to at least one part of the second wavelength spectrum," as used in the '547 patent and as understood by a POSITA at the time of the alleged invention, refers to "a filter layer which is not transparent to an electromagnetic radiation having a third wavelength spectrum which corresponds to at least one part of the second wavelength spectrum."

Pictiva EX2016
Samsung v Pictiva
IPR2024-01095

89. A POSITA at the time of the alleged invention would understand that "a filter layer which is at least partially opaque to an electromagnetic radiation having a third wavelength spectrum which corresponds to at least one part of the second wavelength spectrum," means "a filter layer which is not transparent to an electromagnetic radiation having a third wavelength spectrum which corresponds to at least one part of the second wavelength spectrum."

90. A filter layer being transparent to a wavelength spectrum means that it is transparent to the entire wavelength spectrum. In order for the filter layer to be transparent to this entire wavelength spectrum, the filter layer needs to pass the emission in as unimpeded manner as possible. If the filter layer is impeding the emission by altering the spectral components, then it is not transparent. This is because, if the filter layer only partially passes through a portion of the wavelength spectrum or alters spectral components, then it is no longer transparent. Instead, the filter layer would be partially opaque.

91. My opinion that "a filter layer which is at least partially opaque to an electromagnetic radiation having a third wavelength spectrum which corresponds to at least one part of the second wavelength spectrum" means "a filter layer which is not transparent to an electromagnetic radiation having a third wavelength spectrum which corresponds to at least one part of the second wavelength spectrum" is confirmed by the '547 patent specification. For example, the '547 patent specification states "a ***filter layer***, which is ***at least partially opaque*** to an electromagnetic radiation having a third wavelength spectrum, which corresponds to at least one part of the second wavelength spectrum." '547 patent at 1:34-37. The '547 patent describes the non-transparent filter layer as a "filter layer [that] can be designed ***at least partially to absorb the electromagnetic radiation*** having the fourth spectrum." *Id.* at 9:3-5. A POSITA would understand that transparent means permitting an electromagnetic radiation to pass through in as

Pictiva EX2016
Samsung v Pictiva
IPR2024-01095

unimpeded manner as possible, as any partial absorption or blocking would not be "at least partially opaque" and not "transparent."

92. Additionally, a POSITA would understand that "at least partially opaque" is not transparent, as transparent means that the filter must pass the entire first wavelength spectrum through the filter in as unimpeded manner as possible as the '547 patent states "***'partially' denotes a partial spectrum of a spectrum, for example of the first spectrum***. In particular, the ***partial spectrum of a spectrum can consist of a part of the spectral components of this spectrum***. Furthermore, ***'partially' can also denote a part of an intensity of a spectrum or partial spectrum***." '547 patent at 2:40-45. A POSITA would understand from these disclosures in the '547 patent that a transparent filter would not absorb or block a portion of or part of the spectral components of the first wavelength spectrum, while "at least partially opaque" would block a portion of or part of the spectral components of the wavelength spectrum.

93. For example, the '547 patent specification states that "the filter layer is designed to convert electromagnetic radiation having the third wavelength spectrum into heat or thermal radiation, while ***electromagnetic radiation having the first wavelength spectrum can pass through the filter layer preferably in as unimpeded a manner as possible***. This means, in particular, that ***the electromagnetic radiation emitted by the organic layer sequence during operation remains substantially unaffected by the filter layer***." '547 patent at 3:55-62. Similarly, the '547 patent describes transparent as "the electromagnetic radiation 15 having the first wavelength can pass through the filter layer 4 in ***an unimpeded manner and substantially without any alternation of its spectral components***. To put it another way, the filter layer 4 ***is transparent to electromagnetic radiation 15 having the first wavelength spectrum***." *Id*. at 10:36-42. A POSITA would understand from these descriptions of transparent in the '547 patent specification

Pictiva EX2016
Samsung v Pictiva
IPR2024-01095

that the filter layer is transparent to the electromagnetic radiation having the entire wavelength spectrum so the emission passes through the filter in as unimpeded manner as possible, while "at least partially opaque" would not be transparent.

94. I disagree with Pictiva's proposed construction. A POSITA would not understand "at least partially opaque to an electromagnetic radiation" means "at least partially block an electromagnetic radiation"; and "second/third wavelength spectrum" means "spectral distribution of electromagnetic radiation having second/third spectral component(s) and relative intensities." Pictiva's proposed construction fails to distinguish "at least partially opaque" from "transparent" which renders this limitation meaningless. Moreover, Pictiva's proposed construction contradicts Pictiva's statements to the U.S. Patent & Trademark Office. In its Preliminary Patent Owner Response, Pictiva described the '547 patent's disclosure of a filter layer that was partially opaque:

For instance, Figure 1A depicts an orgnaic layer sequence 1 that emits an electromangetic radiation 15 having a first wavelengh spectrum. EX1001, 10:9-12.

FIG 1A

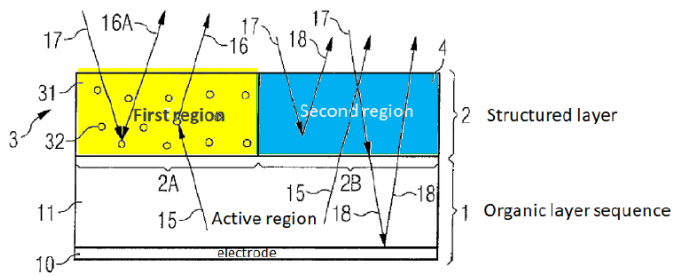

It further teache that

the electromagnetic radiation 15 having the first wavelength can pass through the filter layer 4 in an umimpeded manner and ***substanitally without any alternation of its spectral components***. To put it another way, the filter layer 4 ***is transparent to electromagnetic radiation 15 having the first wavelenght sepctrum***. EX1001, 10:36-42.

That is, being transparent to emission having a first wavelength spectrum implies the emission would pass through the filter "substantially without any alteration of its spectral components." *Id.* Figure 2 depicts the same.

FIG 2

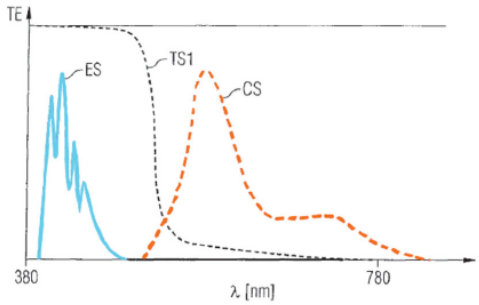

(Figs. 1A, 2, annotated)

In Figure 2, the blue curve depicts an "emission spectrum" of "***a spectral profile of the electromagnetic radiation 15 emitted by the organic layer sequence 1***." EX1001, 11:30-47. The orange CS curve depicts a conversion spectrum that "***represents the wavelength spectrum which is emitted by the wavelength conversion layer*** 3" (*i.e.*, emission having a second wavlength spectrum) that "comprises a yellow wavelength range and a red-green wavelength range, respectively." *Id.* "The curve designated by TS1 indicates a transmission spectrum of the filter layer 4." *Id.*

As Figure 2 shows, "the filter layer 4 is transmissive to blue light and thus to the electromagnetic radiation 15 [having a first wavelength spectrum] emitted by the organic layer sequence 1, while it is opaque to electromagnetic radiation having a yellow wavelength range and a red and green wavelength range [i.e., a third wavelenght spectrum which corresponds to at least one part of the second wavelength spectrum]." *Id.*

Pictiva EX2016
Samsung v Pictiva
IPR2024-01095

IPR2024-00855 POPR at 58-60.

95. Thus, it is my opinion that a POSITA at the time of the alleged invention would understand "a filter layer which is at least partially opaque to an electromagnetic radiation having a third wavelength spectrum which corresponds to at least one part of the second wavelength spectrum," as used in the '547 patent to mean "a filter layer which is not transparent to an electromagnetic radiation having a third wavelength spectrum which corresponds to at least one part of the second wavelength spectrum."

D. "an encapsulation one of disposed upstream and disposed downstream"

Claim	Pictiva's Construction	Samsung's Construction
11	plain and ordinary meaning to a person of ordinary skill in the art in light of the specification, that is, "an encapsulation that is disposed either upstream or downstream of the structured layer in the beam path of the electromagnetic radiation emitted by the organic layer sequence	Indefinite

96. In my opinion, the '547 patent fails to inform a POSITA with reasonable certainty of the scope of the term "an encapsulation one of disposed upstream and disposed downstream," and hence the scope of the claimed invention.

97. A POSITA would not understand the scope of the term "an encapsulation one of disposed upstream and disposed downstream." This term requires an encapsulation that is both upstream and downstream. In other words, the claim language discloses "an encapsulation one of [which is] disposed upstream and [one of which is] disposed downstream." However, the specification does not provide any guidance on how such an encapsulation could meet this requirement in the claim. As the '547 patent fails to provide reasonable certainty of the scope of

the term "an encapsulation one of disposed upstream and disposed downstream," it is my opinion the term is indefinite.

98. I also disagree with Pictiva's proposed construction. Pictiva's proposed construction simply rewrites the claim to require that "an encapsulation that is disposed either upstream or downstream of the structured layer in the beam path of the electromagnetic radiation emitted by the organic layer sequence." However, this is not what the claim states and a POSITA would understand that Pictiva's proposed construction is not the same as "an encapsulation one of disposed upstream and disposed downstream."

99. Thus, it is my opinion that the '547 patent fails to inform a POSITA with reasonable certainty of the scope of the term "an encapsulation one of disposed upstream and disposed downstream," and hence the scope of the claimed invention.

VII. '223 Patent Terms

A. "metal complex"

Claims	Pictiva's Construction	Samsung's Construction
1, 2, 10, 11	plain and ordinary meaning to a person of ordinary skill in the art in light of the specification, that is, a compound containing one or more metal elements that coordinate to one or more non-metal elements, fragments or ions	"a metal complex that is not a compound composed of one or more metal atoms and one or more oxygen atoms"

100. During the prosecution of the '223 patent, the applicant distinguished the Ikeda prior art reference from the pending claims. Ikeda included a compound composed of one or more metal atoms and one or more oxygen atoms. '223 patent prosecution history at Nov. 1, 2012 office action. The Examiner assumed that this was a metal complex:

Claims 1-4 and 9-15 are rejected under 35 U.S.C. 102(e) as being anticipated by Ikeda et al. (US 2008/0258610 A1).

In regard to claim 1, Ikeda e al. teach an organic electronic component, comprising: a substrate 101, a first electrode 102, a second electrode 107, an electron-conducting layer 103 which is arranged in such a way that it is electrically conductively connected to at least one of the electrodes 102/107, wherein the electron-conducting layer 103 can be obtained by joint vaporization of a metal complex, which comprises a central metal atom, with an organic compound (ABSTRACT, Figures 1A-1C, pages 2-4, paragraphs [0062]-[0082]).

101. The applicant disagreed and characterized Ikeda's alleged metal complex as a "metal oxide," after which the applicant provided its working definition of "metal oxide" ("a compound composed of one or more metal atoms and one or more oxygen atoms"). Finally, the applicant stated that its invention did not encompass metal oxides of that type. '223 patent prosecution history at Feb. 1, 2013 response to office action ("As clearly shown above, Applicants contend that Ikeda discloses a light emitting element in which a layer must have a metal oxide. Furthermore, Ikeda discloses that the layer is arranged on the anode of the light emitting element and is produced by simultaneously evaporating a metal oxide and an organic compound (See, for example, Abstract, paragraphs [0093] – [0095] and [0109]). A person of ordinary skill in the art understands that ***a metal oxide is a compound composed of one or more metal atoms and one or more oxygen atoms***. In direct contrast, Applicants assert that in the presently claimed application, the organic electronic layer is obtained by joint vaporization of a metal complex, which comprises a central metal atom, with an organic compound.") (emphasis added):

Lastly, *Ikeda* states (emphasis added):

> The first layer 103 is a layer including a cluster in which arylamine compounds having a biphenyl skeleton form a dimolecular body by being arranged in parallel and **metal oxide** is adjacent to the dimolecular body. **As a specific example of the metal oxide included in the first layer 103, molybdenum oxide (MoO_x), vanadium oxide (VO_x), ruthenium oxide (RuO_x), tungsten oxide (WO_x), or the like is given. Moreover, indium tin oxide (ITO) or zinc oxide (ZnO) can be used**. Not only the above mentioned substances, but also other substances may be used.

Ikeda at page 3, paragraph [0066].

As clearly shown above, Applicants contend that *Ikeda* discloses a light emitting element in which a layer must have a metal oxide. Furthermore, *Ikeda* discloses that the layer is arranged on the anode of the light emitting element and is produced by simultaneously evaporating a metal oxide and an organic compound (*See*, for example, Abstract, paragraphs [0093] – [0095] and [0109]). A person of ordinary skill in the art understands that a metal oxide is a compound composed of one or more metal atoms **and** one or more oxygen atoms.

In direct contrast, Applicants assert that in the presently claimed application, the organic electronic layer is obtained by joint vaporation of a metal complex, which comprises **a** central metal **atom**, with an organic compound.

102. Following these remarks by the applicant, the examiner allowed the claims which ultimately issued. In the Notice of Allowance, the examiner specifically stated that the pending claims were allowed because the prior art failed to teach the claim limitations that included "metal complex":

Pictiva EX2016
Samsung v Pictiva
IPR2024-01095

Allowable Subject Matter

Claims 1-4 and 6-15 are allowed.

The following is a statement of reasons for the indication of allowable subject matter: The prior art of record does not disclose, make obvious, or otherwise suggest the structure of the applicant's together with the other limitations of the independent claims, such as:

In claim 1, "wherein the electron-conducting layer is obtained by joint vaporization of a metal complex, which comprises a central metal atom, with an organic compound, wherein the organic compound comprises a heteroaromatic compound which is conjugated with an aromatic compound via a C-C bond"; and

In claim 11, "wherein the electron-conducting layer is deposited by means of simultaneous vaporization of a metal complex and an organic compound, wherein the organic compound comprises a heteroaromatic compound which is conjugated with an aromatic compound via a C-C bond".

'223 patent prosecution history at June 12, 2013 Notice of Allowability.

103. In my opinion, a POSITA reading the prosecution history (in context with the other intrinsic and extrinsic evidence) would have understood that the applicant disclaimed any metal complexes that were "a compound composed of one or more metal atoms and one or more oxygen atoms." The applicant's language is straightforward and express in this regard. There is no ambiguity that the applicant told the patent office that the scope of the claimed "metal complex" in the '223 patent expressly does not include "a compound composed of one or more metal atoms and one or more oxygen atoms." In my opinion, a POSITA would have recognized the clear and

Pictiva EX2016
Samsung v Pictiva
IPR2024-01095

unmistakable disclaimer of claim scope from that applicant's remarks. For example, the applicant used the terminology "in direct contrast" to set apart its invention from the prior art, which instead used "a compound composed of one or more metal atoms and one or more oxygen atoms."

104. To the extent that Pictiva or its expert argue that the disclaimer was limited to "metal oxides," or in particular to metal oxides that contain "one or more metal atoms and one or more oxygen atoms" ***and no other atoms***, that is not what the applicant told the patent office the disclaimer was. The applicant defined its understanding of "metal oxide": "A person of ordinary skill in the art understands that ***a metal oxide is*** a compound composed of one or more metal atoms and one or more oxygen atoms." (emphasis added). In my opinion, a POSITA would have understood the applicant's language here to be definitional (*i.e.,* lexicographical). To the extent that the applicant's own interpretation of "metal oxide" differs from the understanding of that term in the general field of chemistry, a POSITA reading the relevant section of the prosecution history would have understood that the applicant clearly expressed an intention that its own interpretation should control, and thus should describe the scope of the disclaimer.

B. <u>"wherein the organic compound coordinates to the metal complex due to the joint vaporization"</u>

Claim	Pictiva's Construction	Samsung's Construction
2	plain and ordinary meaning to a person of ordinary skill in the art in light of the specification, that is, "wherein the organic compound coordinates to the metal complex attributable directly or indirectly to the joint vaporization"	"wherein the organic compound coordinates to the metal complex in the gas phase after the organic compound and the metal complex are jointly vaporized"

105. In my opinion, a POSITA reading claim 2 of the '223 patent in light of the specification would have recognized that the plain language of the claim requires a direct causal relationship between the joint vaporization and the coordination, because of the use of the phrase

"due to." A POSITA would have recognized that the coordination must therefore occur ***after*** the joint vaporization. Similarly, specifying that coordination happens "due to joint vaporization" necessarily means that the reactants must first enter the gas phase via joint vaporization, and that the coordination reaction then occurs between the gaseous reactants. If the coordination occurred in the solid phase, for example, then the metal complex and organic compound would not coordinate "due to" the joint vaporization, but simply incidentally following a joint vaporization. A POSITA would have recognized that the claim language requires a stronger linkage between the joint vaporization and the coordination than simply occurring subsequently, and in particular that the coordination is the direct consequence "due to" joint vaporization, which would naturally require the coordination to occur in the gas phase where the reagents are vaporized.

106. The specification supports this interpretation. The '223 patent notes that it is possible for coordination to occur either in the gas phase or when the reactants "meet one another on the substrate surface." '223 patent at 1:60-63; *see also id.* at 11:17-23. A POSITA would have recognized that the relevant language of claim 2 ("due to the joint vaporization") explicitly selects one of these scenarios and requires the coordination to occur in the gas phase. Out of the alternative embodiments described in the specification for where the coordination occurs, claim 2 is directed specifically to the embodiment where coordination occurs in the gas phase.

107. I disagree with Pictiva's proposed construction. First, the proposed construction does not elucidate what "due to" requires because it simply replaces it with the synonym "attributable." Second, the proposed construction allows the coordination to be attributable "indirectly," which a POSITA would not consider to be within the plain and ordinary meaning of "due to," and which does not require a sufficiently causal relationship between the joint vaporization and the coordinate. In other words, Pictiva's proposed construction reads out "due

to" from the claim language and effectively rewrites the larger phrase to "wherein the organic compound coordinates to the metal complex, and joint vaporization occurs at some point." Third, the proposed construction does not acknowledge that the coordination must occur ***after*** the joint vaporization.

C. <u>"coordinate[s]"</u>

Claims	Pictiva's Construction	Samsung's Construction
2, 11 14	plain and ordinary meaning to a person of ordinary skill in the art in light of the specification, that is, "have/has bonding interaction"	"form[s] a dative bond with"

108. The term "coordinate" has a well-understood and well-established meaning in the chemistry field, which is "form a dative bond with." As an initial matter, "coordinate" refers to a specific family of chemical interactions called "coordination chemistry." Coordination chemistry describes how metal ions interact with ligands. In coordination chemistry, when we say an atom or molecule "coordinates," that specifically refers to the formation of a dative bond (also called a "coordinate covalent bond"). In a dative bond, one atom (the donor) provides both electrons for the bond. The other atom (the acceptor) provides an empty orbital to accept those electrons. This is distinct from regular covalent bonds, where each atom contributes one electron. The verb "coordinate" specifically captures the unique nature of dative, or coordinate covalent, bonds, where ligands "donate" or "coordinate" their electron pairs to the metal center.

109. The plain and ordinary meaning of "coordinate" is supported by relevant extrinsic evidence. For example, The New Oxford American Dictionary, Second Edition (2005) defines "coordinate" as "Chemistry denoting a type of covalent bond in which one atom provides both the shared electrons," and it also defines "coordination" as "Chemistry the linking of atoms by coordinate bonds." PICTSAMSUNGEDTX209887. As another example, McGraw-Hill

Dictionary of Scientific and Technical Terms, Sixth Edition (2003) defines "coordinate bond" as "See coordinate valence" and defines "coordinate valence" as "[chem] A chemical bond between two atoms in which a shared pair of electrons forms the bond and the pair has been supplied by one of the two atoms. Also known as coordinate bond; dative bond." PICTSAMSUNGEDTX209893. As a further example, Hawley's Condensed Chemical Dictionary, Fifteenth Edition (2007) defines "coordinate bond" as "(dative bond). A covalent bond consisting of a pair of electrons donated by only one of the two atoms it joins." PICTSAMSUNGEDTX209911. And Encyclopedia of Chemistry (2005) defines "coordinate covalent bond" as "A bond between two atoms in which the shared electrons are contributed by only one of the atoms," and further defines "coordination compound (coordination complex)" as "A compound containing coordinate covalent bonds." PICTSAMSUNGEDTX209916. Chemistry textbooks also agree that "coordinate" refers to a dative bond. *E.g.*, FHSST Chemistry (2008) at 71 ("A dative covalent bond (also known as a coordinate covalent bond) is a description of covalent bonding between two atoms in which both electrons shared in the bond come from the same atom. This happens when a Lewis base (an electron donor) donates a pair of electrons to a Lewis acid (an electron acceptor)."). PICTSAMSUNGEDTX210497.

110. Nothing in the intrinsic evidence calls into question this basic and well-understood meaning of "coordinate." Indeed, the specification assumes the traditional, well-understood meaning of "coordinate." *See, e.g.*, '223 patent at 2:6-12 ("By virtue of the coordination of the organic compound on the metal complexes, and the associated overlap of the orbitals, additional electrons can be transferred from the metal to the ligand via a metal complex-ligand-electron transfer (metal-ligand-charge-transfer complex). These electrons can be available for electron transportation in the organic electronic component."); 3:7-20 (similar).

111. Thus, specific coordination interactions are an integral part of the invention: they are required to achieve the invention's goals of more efficient electron transport. *Id.* at 2:13-16 ("By increasing the 'free' electrons, the electron conductivity in the component is significantly improved. This leads to an increase in efficiency and serviceable life of the organic electronic component."); 3:7-20 (similar).

112. I note further that the specification explicitly describes nitrogen as suitable for coordination because of a "free electron pair," which indicates that the applicant understood that coordination requires a donation of two free electrons. *Id.* at 3:65-67 ("Here, N is a preferred heteroatom. Due to the mostly free electron pair, N has very good coordination properties with respect to metal complexes."); *see also id.* at 10:55-59 ("Each of these compounds comprises a nitrogen heterocycle and in addition a further nitrogen heterocycle or a homoaromatic compound which is formed from C-atoms. Each of these compounds thus has several coordination sites for metal complexes.").

113. Moreover, the specification notes that coordination may occur "via the aromatic system (π-electrons)," which is encompassed by Samsung's construction. *Id.* at 3:54-64. In coordination chemistry, aromatic π-electrons can serve as electron donors just like lone pairs can. The π-electrons occupy bonding molecular orbitals in the aromatic ring. These electrons can donate into empty d-orbitals on metals. The interaction creates a delocalized bonding network between the metal and the aromatic ring. The π-system donates both electrons to the metal, just like a lone pair would. In traditional lone pair dative bonds, two electrons move from a donor atom to an acceptor. In π-dative bonds, two electrons move from a π-orbital to an acceptor. The source of the electron pair (single atom vs. molecular orbital) does not change the fundamental

Pictiva EX2016
Samsung v Pictiva
IPR2024-01095

dative nature of the interaction. Thus, a POSITA would understand that Samsung's proposed construction does not exclude any embodiments described in the specification.

114. I disagree with Pictiva's proposed construction. First, it is not clear what Pictiva's intended meaning of "bonding interaction" is, and that language does not occur in the specification. Second, Pictiva's proposed construction encompasses types of bonds which are not even covalent. Some examples include ionic bonds and metallic bonds. *See* FHSST Chemistry (2008) at 65 (PICTSAMSUNGEDTX210491) ("A chemical bond is formed when atoms are held together by attractive forces."), 74 (PICTSAMSUNGEDTX210500) ("In covalent bonding, electrons are shared between the atoms. There is another type of bonding, where electrons are transferred from one atom to another. This is called ionic bonding."), 76 (PICTSAMSUNGEDTX210502) ("The structure of a metallic bond is quite different from covalent and ionic bonds."). Third, Pictiva's proposed construction encompasses regular, non-coordinate/dative covalent bonds, which are distinct from the normal meaning of "coordinate." *See, e.g.*, Dictionary of Science and Technology, Second Edition (2007) (PICTSAMSUNGEDTX209899), which defines "coordinate bond" as "a chemical bond in which a pair of electrons is shared by two atoms, both of which are supplied by one atom (NOTE: a coordinate bond is a type of covalent bond.)" Fourth, Pictiva's construction is not congruent with the technical principles of the invention, which requires dative bonds in order to achieve its efficiency and increased component lifetime goals. '223 patent at 2:13-16; 3:7-20. In my opinion, allowing additional types of non-dative "bonding interactions" would not achieve the goals of the invention and would not make technical sense.

D. "chain-like structure"

Claim	Pictiva's Construction	Samsung's Construction
12	plain and ordinary meaning to a person of ordinary skill in the art in light of the specification, that is, "a structure that resembles a chain"	"a structure where two metal complexes are linked by an organic compound or a structure where two organic compounds are linked by a metal complex"

115. The term "chain-like structure" does not have a well-understood or plain and ordinary meaning in chemistry. In my opinion, a POSITA would therefore have looked to the specification for guidance on the appropriate definition. The specification gives a definition of a "chain-like structure." '223 patent at 2:33-38 ("It is described that the coordination of the aromatic system can lead to a chain formation, wherein two metal complexes are linked by an organic compound. In this case, the aromatic compound is positioned perpendicularly or almost perpendicularly between adjacent, bridged metal complexes."); 7:48-53 ("These compounds I to XIII allow not only for the formation of two-dimensional chains, but, by virtue of their multiplicity of coordination sites, they also allow for the formation of three-dimensional networks. In this case, an organic compound coordinates to more than two metal complexes."); 11:11-16 ("In an embodiment of the organic electronic component, at least parts of the organic compounds bridge two metal complexes together, so that a chain-like structure is formed and/or at least parts of the organic compounds bridge more than two metal complexes together, so that a network-like structure is formed."); *see also id*. at 2:42-67; 11:48-52 ("By means of the corresponding selection of the metal complexes, more than one organic compound can coordinate to a metal complex, whereby chain-like and/or network-like structures are formed in the electron-conducting layer.").

116. Samsung's proposed construction encompasses both types of examples in the specification: 1) where two metal complexes are linked by an organic compound (*cf. id.* at 7:48-53); and 2) where two organic compounds are linked by a metal complex (*cf. id.* at 11:48-52).

Therefore, a POSITA would have understood that Samsung's proposed construction does not exclude any embodiments discussed in the specification.

117. Samsung's proposed construction is further supported by the language of claim 8, which reads: "The organic electronic component according to claim 1, wherein at least parts of the organic compounds bridge two metal complexes together, so that a chain-like structure of the metal complexes is formed and/or at least parts of the organic compounds bridge more than two metal complexes together, so that a network-like structure of the metal complexes is formed."

118. I disagree with Pictiva's proposed construction. First, it is not clear what "a structure that resembles a chain" means. This is not terminology that is commonly used in the chemistry field, and the scope is ambiguous. Second, Pictiva's proposed construction could encompass types of structures that are not described as "chain-like" in the specification. Third, the additional types of structures that Pictiva appears to attempt to include in the claim scope would not achieve the technical goals of the invention. *Id.* at 11:29-33 ("The formation of chain-like or network-like structures enables additional electrons to be able to be transferred from the metal complexes to the organic compounds, said electrons are then available for charge transport in the electron-conducting layer.").

E. <u>"network-like structure"</u>

Claim	Pictiva's Construction	Samsung's Construction
12	plain and ordinary meaning to a person of ordinary skill in the art in light of the specification, that is, "a structure that resembles a network"	"a structure where more than two metal complexes are linked by an organic compound or a structure where more than two organic compounds are linked by a metal complex"

119. As with "chain-like structure," there is no commonly-accepted meaning of "network-like structure" in chemistry. A POSITA would therefore have turned to the specification and its definition of "network-like structure." I reviewed the supporting portions of the

specification above in the context of "chain-like structure." Those same parts of the specification describe the patentee's understanding of "network-like structure." According to the specification, a "network-like structure" involves more than two metal complexes that are linked by an organic compound or more than two organic compounds that are linked by a metal complex. *E.g.*, '223 patent at 7:48-53 ("[T]hey also allow for the formation of three-dimensional networks. In this case, an organic compound coordinates to more than two metal complexes."); 10:62-64 ("[T]hey also allow for the formation of three-dimensional networks. In this case, the organic compound coordinates to more than two metal complexes."); 11:11-16 ("[A]t least parts of the organic compounds bridge more than two metal complexes together, so that a network-like structure is formed."). And as with "chain-like structure," the language of claim 8 supports Samsung's construction.

120. I disagree with Pictiva's proposed construction. As with "chain-like structure," it is not clear what "a structure that resembles a network" is, and there is no commonly-accepted concept of that in the chemistry field. Pictiva's construction would improperly encompass types of structures that are not described as "network-like" in the specification. Moreover, Pictiva's proposed construction does not make technical sense in the context of the invention and would not achieve the electron-conducting benefits that the specification ascribes to "network-like structures."

F. <u>"degree of cross-linking of the electron-conducting layer"</u>

Claims	Pictiva's Construction	Samsung's Construction
13	plain and ordinary to a person of ordinary skill in the art in light of the specification, that is, "the extent of crosslinking in the electron-conducting layer"	Indefinite

Pictiva EX2016
Samsung v Pictiva
IPR2024-01095

121. In my opinion, the ’223 patent fails to inform a POSITA with reasonable certainty of the scope of the term “degree of cross-linking of the electron-conducting layer,” and hence the scope of the claimed invention.

122. First, the sub-phrase “cross-linking of the electron-conducting layer” does not have an antecedent basis. No cross-linking is explicitly required by the base claims 10 or 12. To the extent that the “cross-linking” in the term would be considered to implicitly refer to cross-linking of a “chain-like or network-like structure,” (*cf.* ’223 patent at 13:61-64) it is not clear what the “cross-linking” is in those structures. And, it is not a given that the “cross-linking” refers to only those structures and not to the coordination of the claimed metal complex with the claimed organic compound.

123. Second, the ’223 patent fails to provide a standard or metric for measuring the “degree” of cross-linking. In this term, “degree” is, by definition, a “term of degree” standing alone, which does not have any objective standard for measurement. Among various options, the degree could be measured by 1) the absolute number of separate “chain-like or network-like structures”; 2) the percentage of “chain-like or network-like structures” as measured against the total number of coordination complexes between the metal complex and the organic compound; 3) the size (*e.g.*, molecular weight) of the “chain-like or network-like structures”; 4) the number of coordination bond or other bonds formed in the “chain-like or network-like structures”; or even 5) the number of coordination complexes formed between the claimed metal complex and the claimed organic compound. The specification does not provide sufficient guidance.

124. Third, the term “cross-linking” standing alone has a well-established meaning in chemistry, and refers to the formation of chemical bonds that connect one polymer chain to another. *See, e.g.*, McGraw-Hill Dictionary of Scientific and Technical Terms, Sixth Edition

Pictiva EX2016
Samsung v Pictiva
IPR2024-01095

(2003) (PICTSAMSUNGEDTX209894) ("crosslinking": "[org chem] The setting up of chemical links between the molecular chains of polymers."); Chambers Dictionary of Science and Technology (2007) (PICTSAMSUNGEDTX209903) ("cross-linking": "(Chem) The formation of side bonds between different chains in a polymer, thus increasing its rigidity. Usually achieved in rubbers with sulphur to give disulphidic or polysulphidic links between vicinal carbon atoms. Physical cross-links are used in thermoplastic elastomers to provide elastomeric properties. See panels on elastomers and thermosets."); A Dictionary of Chemistry, Fifth Edition (2004) (PICTSAMSUNGEDTX209908) ("cross linkage": "A short side chain of atoms linking two longer chains in a polymeric material."); Hawley's Condensed Chemical Dictionary, Fifteenth Edition (2007) (PICTSAMSUNGEDTX209912) ("cross-linking": "Attachment of two chains of polymer molecules by bridges . . . ."); Academic Press Dictionary of Science and Technology (1992) (PICTSAMSUNGEDTX209921) ("cross-linking": "Organic Chemistry. The attachment of chains of a polymer to one another to make the polymer into a single network with increased strength and resistance to solvents."); Academic Press Dictionary of Science and Technology (1992) (PICTSAMSUNGEDTX209921) ("cross-link density": "Materials Science. the density or extensiveness of chemical links that form between two polymers or between polymers and other substances.").

125. Thus, "cross-linking" is very specific to polymer chemistry. But the technology described and claimed in the '223 patent instead pertains to small molecules, which are not polymers. *E.g.*, '223 patent at cl. 1 ("joint vaporization of a metal complex, which comprises a central metal atom, with an organic compound, wherein the organic compound comprises a heteroaromatic compound which is conjugated with an aromatic compound via a C—C bond."). More broadly, the types of cross-linkages that occur between polymers are significantly different

from the chain-like or network-like structures described in the ’223 patent specification. The cross-linkages between polymers are in the form of “bridges” or “side bonds,” while the chain-like or network-like structures contemplated by the ’223 patent do not use those structures. *E.g.*, ’223 patent at 2:33-67; 7:48-53; 11:11-16; 11:48-52. In my opinion, a POSITA would not be able to identify any parallel “cross-link” structure in the small molecules that are covered by the ’223 patent. In other words, “cross-linking” has no meaning in the context of the ’223 patent, and certainly no parallel meaning implied by the usage of that term in polymer chemistry.

126. I also disagree with Pictiva’s proposed construction. First, it is not clear what “the extent of crosslinking in the electron-conducting layer” means, or how it would be measured. Second, Pictiva’s proposed construction simply replaces “degree” with “extent” without providing any clarity on the scope of the term. Third, the same measurement problems that are present with “degree” that I listed above would also apply to “extent.”

VIII. <u>’164 Patent Terms</u>

A. <u>“matrix”</u>

Claims	Pictiva’s Construction	Samsung’s Construction
1-6, 10, 13-16	plain and ordinary meaning to a person of ordinary skill in the art in light of the specification	“a continuous phase of the mixture of matrix materials”

127. In my opinion, “matrix” in the ’164 patent claims should be construed as “a continuous phase of the mixture of matrix materials.”

128. The specification consistently describes the matrix as a mixture of the three constituent matrix materials. *E.g.*, ’164 patent at 3:20-21 (“Thus, the concentration of a matrix material in the mixture of several matrix materials plays a role.”); 3:31-33 (“the mobility of electrons and holes in the matrix, which has at least three matrix materials”); 4:24-26 (“Each of these layers can have a matrix, which has at least a first, a second, and a third matrix material.”);

4:39-41 ("Depending on which charge carrier type is to have a higher mobility, the matrix can contain a higher concentration of the individual matrix material."); 6:54-56 ("Both the emission layer 30 and also the electron transport layer 32 and the hole transport layer 31 can have matrices which are composed of three or more matrix materials."); 8:52-55 ("the compilation of the first, second, and third matrix material for the matrix"). Thus, the specification is consistent in describing each matrix material as being mixed throughout the matrix.

129. A POSITA would understand that one of the main functions of a matrix as described in the '164 patent is to facilitate light emission from the emitter material housed in the matrix. To be effective, a matrix needs to be in a continuous phase to not only encourage the efficient transport of electrons and holes through, *e.g.*, the electron transporting material and hole transporting material in the matrix, but to also ensure the desired distribution and stable housing of the emitter material. Given that the claimed matrix is composed of a "mixture of matrix materials," the mixture needs to form a continuous phase. That is, the multiple matrix materials would together form a mixed matrix—a connected structure that holds, e.g., the emitter material. The advantage of a mixed matrix is that some of the matrix materials can function as charge transport materials to improve the ability of the emitter material to produce light.

130. The extrinsic evidence also supports Samsung's construction. As one example, A Dictionary of Chemistry, Fifth Edition (2004) defines "matrix" as "(in chemistry) A continuous solid phase in which particles (atoms, ions, etc.) are embedded."). PICTSAMSUNGEDTX209934. Similarly, Chambers Dictionary of Science and Technology (2007) defines "matrix" as "(BioSci) More or less continuous matter in which something is embedded . . . ."). PICTSAMSUNGEDTX209937; *see also* Pictiva's Patent Owner Preliminary Response in IPR2024-01093, at 2-3 (citing these definitions); *see also id.* at 9.

131. I additionally understand that Pictiva's expert in IPR2024-01093, Dr. Sims, made the following statement: "In the context of the '164 patent, a matrix material would be part of the continuous phase in a given organic layer . . . ." Declaration of Dr. Marc Sims in IPR2024-01093, Ex. 2001, ¶ 37.

B. <u>"matrix material"</u>

Claims	Pictiva's Construction	Samsung's Construction
1-6, 10, 13-16	plain and ordinary meaning to a person of ordinary skill in the art in light of the specification	The first, second, and third matrix materials are different materials and are part of the same matrix.

132. In my opinion, "matrix material" should be construed to require that the claimed first, second, and third matrix materials are different materials and are part of the same matrix.

133. The claimed matrix materials must be different materials. Each matrix material is described as performing a particular role—*e.g.*, hole transport, electron transport, or high band gap. *E.g.*, '164 patent at 2:32-36 ("The first matrix material can be an Ultra Wide Band Gap (UGH) material, which has a band gap that is large in comparison to the other matrix materials."); 2:50-52 ("Thus, the second matrix material, which has a higher HOMO than the third matrix material, is more suitable as the hole transport material than the third matrix material."); 2:55-57 ("Thus, the third matrix material, which has a lower LUMO than the second matrix material, is suitable as the electron transport material."); 3:21-26 ("The first matrix material, which in comparison to the second and third matrix material has the largest band gap and the smallest charge carrier mobility, can be used to adjust the concentration of the second and the third matrix material separately from one another."). The listed goals of the invention rely on the three matrix materials working in concert, but having particular electrical properties, in order to improve charge carrier transport. *E.g.*, '164 patent at 1:33-36 ("One object of the invention is to provide an electronic device with an improved charge carrier transport and an improved charge carrier balance in the

organic layers and thus an increased efficiency."); 8:52-55 ("The relative ratio of the LUMOs and HOMOs of the three combined materials and their position to one another is important in the compilation of the first, second, and third matrix material for the matrix.").

134. The electrical properties of the three matrix materials are reflected in the claim limitations requiring a specific relationship of HOMO and LUMO levels between the three matrix materials. The claims require HOMO and LUMO levels "energetically lower than" and "energetically higher than" other levels.

135. Moreover, the specification explicitly describes the three matrix materials as different. '164 patent at 1:55-59 ("Thus, an electronic device is made available which comprises more than two different matrix materials in an organic functional layer. Three different matrix materials can be present thereby, and depending on the need, more than three also."). I further note that the specification's reference to selecting matrix materials "similarly or differently" in 4:26-28 is referring to whether different layers (with their own matrices and matrix materials) can use the same materials as ***other layers***, not whether the three matrix materials present in a single given layer can be the same.

136. The claimed matrix materials must be part of the same matrix. A POSITA would have recognized that the claim itself requires this via the language "wherein the at least one organic functional layer has at least a first matrix material, a second matrix material, and a third matrix material." Thus, all three matrix materials are part of the same organic functional layer (which has a matrix). *Cf.* '164 patent at 4:24-26 ("Each of these layers can have a matrix, which has at least a first, a second, and a third matrix material."). Additionally, the specification describes the three matrix materials as being part of (and forming) the same matrix. *E.g.*, *id.* at 3:31-33 ("the mobility of electrons and holes in the matrix, which has at least three matrix materials"); 4:39-41

Pictiva EX2016
Samsung v Pictiva
IPR2024-01095

("Depending on which charge carrier type is to have a higher mobility, the matrix can contain a higher concentration of the individual matrix material."); 6:54-56 ("Both the emission layer 30 and also the electron transport layer 32 and the hole transport layer 31 can have matrices which are composed of three or more matrix materials."); 8:52-55 ("the compilation of the first, second, and third matrix material for the matrix").

137. Additionally, a POSITA would have recognized that the invention does not make technical sense unless the three matrix materials are present in the same matrix such that they may electrically interact. The three matrix materials are chosen based on specific HOMO and LUMO values ***in relation to each other***. These HOMO and LUMO criteria would not make sense if one of the matrix materials could be in a different matrix, such that it was physically separate from the other matrix materials and therefore could not interact electrically with them. *E.g.*, *id.* at 5:3-6 ("By the adjustment of the charge carrier mobility with the aid of the three matrix materials, it is possible to purposefully influence the position of the recombination zone in an emission layer.").

C. "charge carrier mobility"

Claims	Pictiva's Construction	Samsung's Construction
4, 16	plain and ordinary meaning to a person of ordinary skill in the art in light of the specification, that is, hole mobility (for a hole transport material) and/or electron mobility (for an electron transport material)	Indefinite

138. In my opinion, the '164 patent fails to inform a POSITA with reasonable certainty of the scope of the term "charge carrier mobility," and hence the scope of the claimed invention. The principal reason for this is that the charge carrier mobility is highly dependent on the surrounding environment and is not an intrinsic property of a material. But the '164 patent claims treat it as such. *E.g.*, '164 patent at cl. 4 ("the first matrix material has a charge carrier mobility

Pictiva EX2016
Samsung v Pictiva
IPR2024-01095

which is lower than the charge carrier mobilities of the second and third materials."). This is not true for several reasons.

139. First, environmental factors like temperature and humidity can alter the molecular packing of the organic semiconducting materials. As one example, humidity can cause swelling of the organic layers. As another example, temperature fluctuations can lead to thermal expansion or contraction. These structural changes affect the intermolecular distances of the claimed matrix materials. The intermolecular spacing directly affects the overlap of π-orbitals. In turn, changes in orbital overlap influence the hopping transport mechanism that carriers use to move through the material. Better orbital overlap generally leads to higher mobility. Indeed, the '164 patent specification concedes that the molecular spacing directly influences charge carrier mobility. '164 patent at 3:17-21 ("The mobility of electrons and holes can depend on the molecule distance—that is, the average distance between charge carrier-transporting molecules in the individual matrix material. Thus, the concentration of a matrix material in the mixture of several matrix materials plays a role.").

140. Second, the presence of dopant/guest molecules changes the electronic structure around the matrix molecules. This affects the overlap between molecular orbitals in the transport pathway. Importantly, energy levels of the matrix material can shift due to these interactions. The degree of electronic coupling impacts how easily charges can move. Some dopants may create new pathways for charge transport. Other dopants may block existing transport channels.

141. Third, the relative HOMO/LUMO levels of surrounding materials influence charge transfer. For example, energy barriers at interfaces affect injection and transport of holes and electrons. Furthermore, local polarization effects from nearby molecules modify energy landscapes. These energetic factors directly impact carrier mobility.

142. Last, the phenomenon known as "charge trapping" confirms that charge carrier mobilities are not intrinsic to particular types of matrix materials. Surrounding molecules can act as trap sites. Trap sites are locations with lower energy states than the normal transport path. The distribution and depth of these traps affects overall mobility. Charge carriers (electrons/holes) normally move through the material by hopping between molecules. When a charge encounters a trap, it falls into this lower energy state—extra energy is needed for the charge to escape and continue moving. This reduces the overall mobility since carriers spend time stuck in traps. The traps can be shallow, requiring only small amounts of energy to release carriers, or they can be deep, needing significant energy to free the trapped charge.

143. For at least these reasons, a POSITA would not be able to accurately assess whether a given material in isolation has a greater or lesser charge carrier mobility than another given material. Because claims 4 and 6 treat the charge carrier mobility as an immutable parameter of a material, the '164 patent fails to apprise a POSITA with reasonable certainty of the scope of those claims.

144. I have considered the part of the specification that states "the individual mobilities of the charge carriers are indicated in m2/Vs for the various line forms; they fluctuate between 10-8 to 10-12." '164 patent at 7:7-10. Various terms in that excerpt appear to be incorrectly formatted because they are not presented in superscript. Even if the excerpt had been correctly formatted, it would not have informed a POSITA of the scope of a "charge carrier mobility" with reasonable certainty.

145. I have further considered the specification's statement at 3:35-52 that "the mobility can be determined in the following manner" according to a formula from "Miller and Abraham." '164 patent at 3:35-52. The formula reproduced in the specification is particular to the "mobility"

Pictiva EX2016
Samsung v Pictiva
IPR2024-01095

at "a localized state" and "between places i and j." The formula confirms that a "charge carrier mobility" is not an intrinsic property of a material. I additionally note that the mobility formula fails to account for several circumstances (as I described above) that could affect the ultimate mobility, and is therefore not accurate.

146. Other than these sections, the specification does not explain the nature of a "charge carrier mobility," or purport to provide a custom definition. The defects in the claimed usage of "charge carrier mobility" are not corrected or addressed by the specification.

147. I additionally note that Pictiva appears to agree that the "charge carrier mobility" is not a property intrinsic to a material, although it confuses "charge transport" and "charge carrier mobility." *See, e.g.*, Pictiva's Patent Owner Preliminary Response in IPR2024-01093, at 1 ("[C]harge transport depends on both charge carrier mobility and the number of charge carriers present . . . ."); Declaration of Dr. Marc Sims in IPR2024-01093, Ex. 2001, at ¶ 44 ("There are indeed many factors that influence charge carrier mobilities in organic semiconductors . . . .").

148. I conclude that "charge carrier mobility" and the claims that specify it are indefinite.

D. <u>"A method for the production of an electronic device according to claim 1, comprising the steps of:"</u>

Claims	Pictiva's Construction	Samsung's Construction
13	plain and ordinary meaning to a person of ordinary skill in the art in light of the specification, that is "a method for producing an electronic device that has the properties according to claim 1, the method of production includes, but is not limited to, the steps of …."	Indefinite

149. In my opinion, a POSITA reading claim 13 would not be able to understand the intended scope of the claim, and in particular whether the claim is directed to both method steps and apparatus limitations. Asserted claim 1 is an apparatus claim and includes limitations about

the structure and components of a claimed electronic device. *E.g.*, '164 patent at cl. 1 ("a first electrode"). Asserted claim 13, which purports to depend from claim 1, is a method claim that contains method steps. *E.g.*, *id.* at cl. 13 ("C) placement of at least one organic functional layer between the first electrode and the second electrode, wherein ***in method step C*** . . . .") (emphasis added). It would not have been clear to a POSITA whether each structural limitation must be present in the device, in addition to requiring the method steps to be performed, in order to practice claim 13. Because the type classification of the claim is unclear, a POSITA would not be informed, with reasonable certainty, about the scope of the invention.

150. I disagree with Pictiva's proposed construction because it materially rewrites the claim language in a way that does not follow from the language itself. For example, it replaces "an electronic device according to claim 1" with "an electronic device that has the properties according to claim 1." But claim 1 includes structures that are not "properties," such as "a substrate" and "a first electrode." To the extent that Pictiva's proposed construction attempts to eliminate or read out requirements present in claim 1, the construction is inappropriate. Additionally, Pictiva's proposed construction does not address the mixing of apparatus and method claim types.

IX. '492 Patent Terms

A. "applied in a structured fashion" and "applying . . . in a structured fashion"

Term	Pictiva's Construction	Samsung's Construction
"applied in a structured fashion" (cls. 9, 10, 16)	plain and ordinary meaning to a person of ordinary skill in the art in light of the specification. For example, the '492 patent discloses"[t]he fact that the dielectric and/or the electrode layer and/or subsequently further layers or materials are 'applied in a structured fashion' means, in various embodiments, that the desired structure	"applied such that the desired structure is already formed during the application of the corresponding layer, in contrast to planar application of the corresponding layers and subsequent structuring of the layers, as is the case for

	is already formed during the application of the corresponding layer. The area to be coated is thus coated only in partial regions dependent on the desired structure." '492, 1:66-2:4.	example in a photolithographic method."
"applying . . . in a structured fashion" (cls. 1, 10)	plain and ordinary meaning to a person of ordinary skill in the art in light of the specification. For example, the '492 patent discloses"[t]he fact that the dielectric and/or the electrode layer and/or subsequently further layers or materials are 'applied in a structured fashion' means, in various embodiments, that the desired structure is already formed during the application of the corresponding layer. The area to be coated is thus coated only in partial regions dependent on the desired structure." '492, 1:66-2:4.	"applying such that the desired structure is already formed during the application of the corresponding layer, in contrast to planar application of the corresponding layers and subsequent structuring of the layers, as is the case for example in a photolithographic method."

151. I understand that a patentee can act as his own lexicographer, that is, the patentee can set out a definition of a claim term in the patent itself. The patentee did so for the term "applied in a structured fashion"; the patentee set out in detail the meaning of that term in the context of the patent. Specifically, the patent specification states:

> "The fact that the dielectric and/or the electrode layer and/or subsequently further layers or materials are 'applied in a structured fashion' means, in various embodiments, that ***the desired structure is already formed during the application of the corresponding layer. The area to be coated is thus coated only in partial regions dependent on the desired structure.***
>
> ***This is in contrast to planar application of the corresponding layers and subsequent structuring of the layers, as is the case for example in a photolithographic method.*** The structured application of the layers makes it possible to be able to dispense with the firstly planar application of the corresponding layers and the subsequent complex structuring of the layers, for example the photolithographic method, and/or an expensive photoresist for the photolithographic method. This contributes to simple and/or cost-effective production of the passive electronic component."

'492 patent at 1:65-2:14 (emphasis added).

Pictiva EX2016
Samsung v Pictiva
IPR2024-01095

152. Therefore, in my opinion, a POSITA would understand the term "applied in a structured fashion" to mean what the patent says it means. In the context of the term "applying . . . in a structured fashion," used in claims 1 and 10, I can discern no substantive difference, in the context of the intrinsic record, between the claim term "applied in a structured fashion" and the claim term "applying . . . in a structured fashion." Thus, I understand them to mean the same thing (other than the grammatical difference).

B. "optoelectronic component"

Claim	Pictiva's Construction	Samsung's Construction
10	plain and ordinary meaning to a person of ordinary skill in the art in light of the specification, that is, an electrical or electronic component for detecting, sensing, generating, interconverting, modulating, transmitting, responding to, controlling or otherwise interacting with light or optical signals.	"An electrical or electronic component that converts optical energy into electrical energy, converts electrical energy into optical energy, or both"

153. In my opinion, at the time of the claimed invention, and in light of the intrinsic record as a whole, a POSITA would understand the term "optoelectronic component" in claim 10 of the '492 patent to mean: "An electrical or electronic component that converts optical energy into electrical energy, converts electrical energy into optical energy, or both." This understanding is consistent with the intrinsic record, as discussed further below, and with the general understanding of a POSITA of the term at the time of the claimed invention.

154. In order to understand the scope of the claims in the '492 patent, a POSITA would have to consider how to interpret the term "optoelectronic component," as well as how to interpret the term "passive electronic component," and how the two terms are different from one another. For example, claim 14 requires "the passive electronic component and the optoelectronic

component are connected in series via the second contact region." Further, claim 10 of the '492 patent requires a "passive electronic component" and it separately requires that a certain "dielectric demarcates a component region for forming an optoelectronic component." In the specification of the patent, an overview of potential embodiments specifically references the embodiments' separate use of "optoelectronic components" and "passive electronic components." *See* '492 patent at 20:5-15 ("The disclosure is not restricted to the embodiments indicated. By way of example, it is possible to produce more than one, for example two, three or more passive electronic components and/or optoelectronic components, for example connected in series or in parallel, in particular without carrying out a photolithographic process and/or with only one etching process. Furthermore, it is possible to combine one, two or more passive electronic components with the optoelectronic component or the optoelectronic components, for example electrically in series one after the other and/or in parallel with one another.").

155. Thus, a POSITA would understand the patent to characterize "optoelectronic components" and "passive electronic components" in contradistinction to one another, and the patent claims require these two types of components separately. Therefore, in my opinion, a POSITA's understanding of the scope of the claims of the '492 patent, including claim 10, depends on a POSITA's understanding of the meaning of the term "optoelectronic component" and of the term "passive electronic component" (discussed separately below).

156. The term "optoelectronic component" is a well-understood term in the art. A number of technical dictionaries contain definitions of the term (or related terms). *See, e.g.*, Wiley Electrical And Electronics Engineering Dictionary; Steve M. Kaplan; John Wiley & Sons, Inc., 2004 ("optoelectronic device Also spelled opto-electronic device. 1. A device which converts optical energy into electrical energy. Also, a device which converts an optical signal into an

Pictiva EX2016
Samsung v Pictiva
IPR2024-01095

electrical signal. An example is a photodiode. 2. A device which converts electrical energy into optical energy. Also, a device which converts on electrical signal into an optical signal. An example is an LED. 3. A device, such as a laser, which combines optics and electronics.”). A POSITA would understand the term “optoelectronic component” to have this definition. In my opinion, the first definition is the most representative of how the term is used in the claims of the ’492 patent. Other dictionary definitions around the time contain similar definitions. *See* McGraw-Hill Dictionary Of Scientific And Technical Terms, Sixth Edition, The McGraw-Hill Companies, Inc., 2003 (“optoelectronics [ELECTR] 1. The branch of electronics that deals with solid-state and other electronic devices for generating, modulating, transmitting, and sensing electromagnetic radiation in the ultraviolet, visible-light, and infrared portions of the spectrum.”); A Dictionary of Physics, Fifth Edition, Oxford University Press, 2005 (“optoelectronics The branch of *electronics concerned with electronic devices (frequently solid-state devices) for generating, transmitting, modulating, and detecting *electromagnetic radiation, especially at optical, ultraviolet, and infrared frequencies.”); A Dictionary of Electronics and Electrical Engineering (Oxford Quick Reference) by Andrew Butterfield, John Szymanski (“optoelectronics[:] The study and design of electronic devices that manipulate light in some way. These range from photodetectors that convert light into electricity to semiconductor lasers and *light-emitting diodes. The underlying theory is largely based on the principles of quantum physics. See also optical electronics.”).

157. In my opinion, when reading the claim term “optoelectronic component” in the ’492 patent, in light of the ’492 patent and the intrinsic record as a whole, a POSITA would understand the patent to use the term in a way consistent with its generally accepted usage among people of ordinary skill in the art at the time of the claimed invention. Although the patent does

Pictiva EX2016
Samsung v Pictiva
IPR2024-01095

not expressly define the term "optoelectronic component," the patent's many references to examples of optoelectronic components, and its references to functions of or structures of optoelectronic components, are consistent with how a POSITA would understand the term "optoelectronic component" at the time of the claimed invention.

158. Claim 13 describes, to some degree, steps for forming an "optoelectronic component" as contemplated by the '492 patent. *See* '492 patent at cl. 13 ("The method as claimed in claim 11, wherein a first electrode of an optoelectronic component is formed by the first electrically conductive layer between the optically functional layer and the substrate and a second electrode of the optoelectronic component is formed by the electrode layer on a side of the optically functional layer facing away from the first electrode, wherein the optoelectronic component comprises the organically functional layer between the first and second electrodes of the first optoelectronic component."). Embodiments addressed in the specification disclose similar contemplated optoelectronic devices. *See, e.g.*, '492 patent at 6:23-31.

159. The specification of the '492 patent also discloses a number of examples of optoelectronic devices. *See, e.g.*, '492 patent at 4:46-63 ("An optoelectronic component can be for example a component which absorbs or emits electromagnetic radiation. A component which absorbs electromagnetic radiation can be a solar cell, for example. In various embodiments, a component which emits electromagnetic radiation can be a semiconductor component which emits electromagnetic radiation and/or can be embodied as a diode which emits electromagnetic radiation, as an organic diode which emits electromagnetic radiation, as a transistor which emits electromagnetic radiation or as an organic transistor which emits electromagnetic radiation. The radiation can be for example light in the visible range, UV light and/or infrared light. In this connection, the component which emits electromagnetic radiation can be embodied for example

Pictiva EX2016
Samsung v Pictiva
IPR2024-01095

as a light emitting diode (LED) as an organic light emitting diode (OLED), as a light emitting transistor or as an organic light emitting transistor. In various embodiments, the light emitting component can be part of an integrated circuit."); 8:31-48; *id.* 15:9-12 ("The optoelectronic component can be for example a component which emits electromagnetic radiation, for example a light emitting component **100**, for example in the form of an organic light emitting diode.").

160. In my opinion, understanding the term "optoelectronic component" to mean, "an electrical or electronic component that converts optical energy into electrical energy, converts electrical energy into optical energy, or both," reflects the full, broad scope of the term as it is used in the '492 patent.

C. <u>"passive electronic component"</u>

Claims	Pictiva's Construction	Samsung's Construction
1, 10, 16	For claims 1 and 16, the preamble is not limiting; For claim 10, plain and ordinary meaning to a person of ordinary skill in the art in light of the specification, that is, "an electronic component that is not active"	"an electronic component, such as a capacitor or a resistor, that is neither active nor an optoelectronic component"; phrase is limiting to the extent it is in a preamble.

161. Based on the parties' proposed constructions, there appears to be no dispute that a "passive electronic component" is not an active component. Further, the '492 patent clearly states that a capacitor or a resistor is an example of a "passive electronic component" and I do not understand there to be any dispute about that. *See* '492 patent at 2:20-21 ("A passive electronic component can be for example a capacitor and/or a resistor or a combination. . . .").

162. Thus, I understand that the only issue in dispute is whether a passive electronic component can be an optoelectronic component.

163. In my opinion, a POSITA would understand the term "passive electronic component" in claims 1, 10, and 16 of the '492 patent to not encompass an optoelectronic

component. In my opinion, the claim term "passive electronic component" in claims 1, 10, and 16 of the '492 patent would mean, to a POSITA, "an electronic component, such as a capacitor or a resistor, that is neither active nor an optoelectronic component."

164. Throughout the intrinsic record, including in the claims and the specification, the '492 patent distinguishes between a "passive electronic component" and an "optoelectronic component." For example, the '492 patent is titled, "Method for producing a passive electronic component, method for producing an optoelectronic assembly and passive electronic component"; the specification, in turn, states: "An optoelectronic assembly may include for example a passive electronic component and one, two or more optoelectronic components." '492 patent at 8:29-31. S*ee* discussion of the term "optoelectronic component" (above); *see also id.* at 20:5-15; 4:35-41.

165. The claims in the '492 patent recognize the patent's distinction between passive electronic components and optoelectronic components. For example, claim 1 is directed to a "method for producing a passive electronic component," while claim 13 is directed to a method for forming an "optoelectronic component," and claim 14 covers "The method as claimed in claim 13, wherein the passive electronic component and the optoelectronic component are connected in series via the second contact region." Allowing a passive electronic component to be an optoelectronic component would render claim 14 unintelligible because it would not distinguish between the passive electronic component and the optoelectronic component. I understand that claims should be interpreted to avoid rendering them unclear to a POSITA.

166. The '492 patent discloses details about what passive electronic components are and how they are formed; it similarly discloses details about what optoelectronic devices are and how they are formed. *See, e.g.,* '492 patent at 8:31-34 ("An optoelectronic component may include for example a component which absorbs electromagnetic radiation and/or a component which emits

Pictiva EX2016
Samsung v Pictiva
IPR2024-01095

electromagnetic radiation."); cl. 13 ("the optoelectronic component comprises the organically functional layer between the first and second electrodes of the first optoelectronic component"). Despite the patent's detail about passive electronic components and optoelectronic components, there is no disclosure, or suggestion, in the patent of any passive electronic component that could be an optoelectronic component. Interpreting "passive electronic component" to include at least some "optoelectronic devices" would render the claim language, including for claims 1, 10, and 16, indefinite, because the claims, read in light of the patent as a whole, relies on a distinct understanding of "passive electronic component" and "optoelectronic component."

167. The language of claim 10 clearly indicates that a passive electronic component cannot be an optoelectronic component. Claim 10 requires a "passive electronic component," comprising several enumerated substructures. Claim 10 also requires "applying the dielectric in a structured fashion to the second layer such that the dielectric demarcates a component region for forming an optoelectronic component." By referencing a "region for forming ***an*** optoelectronic component," the claim language implies that no optoelectronic component had been referenced so far in the claim (otherwise the claim would have referenced "***the*** optoelectronic component" or "***another***" optoelectronic component). However, claim 10 had already, of course, described a passive electronic component, without any indication that the passive electronic component could also be the later-referenced "optoelectronic device." Therefore, the language of claim 10 implies that a passive electronic component cannot be an optoelectronic component.

D. <u>"plurality of capacitors and/or resistors"</u>

Claim	Pictiva's Construction	Samsung's Construction
6	plain and ordinary meaning to a person of ordinary skill in the art in light of specifications, that is, "more than one capacitor and/or resistor"	Indefinite

168. In my opinion, the term "plurality of capacitors and/or resistors," read in the context of the patent and its prosecution history, fails to provide a POSITA with reasonable certainty of the scope of the invention in claim 6. The language of claim 6, read together with the claim it depends from (claim 2) is, on its face, not comprehensible by a POSITA and thus fails to apprise a POSITA with reasonable certainty of the scope of the claim. Claim 6 states: "The method as claimed in claim 2, wherein a plurality of capacitors and/or resistors are formed electrically in parallel with one another and/or electrically in series one after another." Thus, claim 6 requires carrying out the method in claim 2 in a way that capacitors or resistors (or both) are formed in parallel with one another or in series one after another. Claim 2, in turn, addresses a method to form a capacitor, but it does not address a method to form a resistor (nor does the claim it depends from—claim 1). Thus, a POSITA has no way of discerning, based on the claim language, how claim 2 could possibly be carried out such that resistors are formed in parallel with or in series with other components, because claim 1, claim 2, and claim 6 nowhere disclose how resistors are to be formed under the "method as claimed in claim 2" at all. Thus, the language in claim 6 is unclear on its face and fails to apprise a POSITA of the scope of the claim (or how the claim can be carried out at all).

169. Reading claim 6 in connection with the prosecution history confirms that the language in claim 6 fails to provide reasonable certainty about the scope of the claim, and the prosecution history makes clear why the claim cannot be understood in its present form. In a March 25, 2015 preliminary amendment from the applicants of the '492 patent, the applicants stated that "Claims 3, 6-10, 13, and 15 have been amended to remove multiple dependence." Preliminary Amendment at 10. The content of the amendment shows that claim 6 previously stated: "The method as claimed in any of the preceding claims wherein two, three or more

Pictiva EX2016
Samsung v Pictiva
IPR2024-01095

capacitors and/or resistors are formed electrically in parallel with one another and/or electrically in series with one another." *Id.* at 5. Prior to the amendment, claim 2 addressed a method for forming a capacitor, and claims 3-5, together, addressed methods for forming a resistor. In this pre-amendment context, claim 6 depended on a set of claims that disclosed a method for forming a capacitor and a method for forming a resistor; thus, performing those methods "wherein two, three or more capacitors and/or resistors are formed in parallel with one another and/or electrically in series with one another" was comprehensible by a POSITA. However, in its amended form, claim 6 depends on a method for forming a resistor, but no such method for forming a resistor is referenced in any of the relevant claim language.

170. Thus, the applicants for the '492 patent rendered claim 6 unclear and ambiguous when they revised the claim to make it depend only on claim 2 (which concerns a method for forming a capacitor) instead of claim 6 depending on claims 1-6 (which, together, concern methods for forming a capacitor and for forming a resistor). In my opinion, a POSITA cannot make sense of the scope of the asserted claim 6, nor could a POSITA understand what the above-discussed amendment to claim 6 accomplished (or was meant to accomplish).

E. **"a resistance region . . . which has a taper in a direction parallel to the electrically conductive layers"**

Claim	Pictiva's Construction	Samsung's Construction
3	plain and ordinary to a person of ordinary skill in the art in light of the specification, that is, "a resistance region which has a shape that gradually narrows in a direction parallel to the electrically conductive layers"	Indefinite

Pictiva EX2016
Samsung v Pictiva
IPR2024-01095

171. Claim 3 requires: "The method as claimed in claim 1, wherein, before the dielectric is applied, a second trench and at least one third trench are formed, which delimit a resistance region, which comprises a part of the first and second electrically conductive layers and which has a taper in a direction parallel to the electrically conductive layers. . . ."

172. For purposes of the claim term at issue, the "resistance region" is required to have "a direction parallel to the electrically conductive layers." As a POSITA, reading this claim term in light of the patent as a whole, together with the prosecution history, it is my opinion that this claim does not provide reasonable certainty to a POSITA of the scope of the invention. While the crux of the claim limitation at issue is that the taper of the resistance region must be oriented in a certain direction, it is impossible to discern what direction is within versus not within the scope of the claimed invention.

173. Figure 10 depicts one orientation of the taper:

Fig. 10

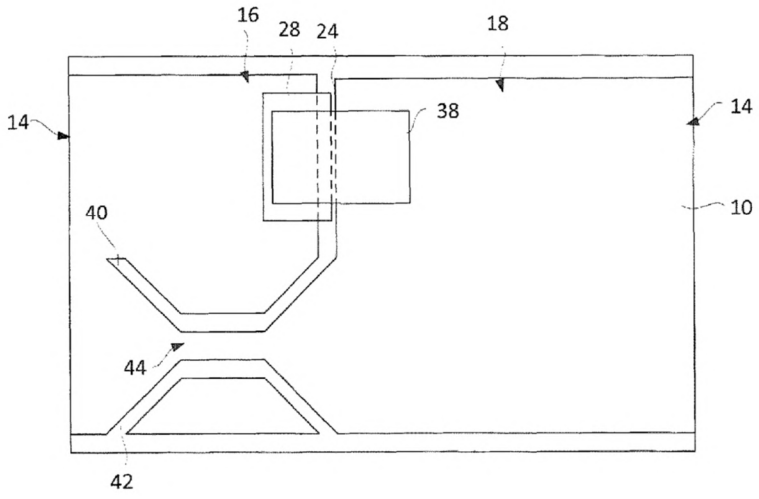

174. The associated explanation in the specification states: "FIG. 10 shows a plan view of one embodiment of a passive electronic component which includes for example the capacitor explained above. The passive electronic component includes for example the second trench **40** and

Pictiva EX2016
Samsung v Pictiva
IPR2024-01095

the third trench **42**, in which the substrate **10** is exposed. The second and third trenches **40**, **42** can demarcate the resistance region **44**, for example, which has the taper. The resistance region **44** can lead for example into the first contact region **16**, on the one hand, and into the second contact region **18**, on the other hand." '492 patent at 13:1-14.

175. The "resistance region" is a region of the electrically conductive layers, as described in the language of claim 3. Thus, the resistance region is both a part of the electrically conductive layers ***and*** it must contain a taper that is parallel to those layers. The patent and prosecution history nowhere clarify how it can be determined whether the taper is "parallel" to the layers or not, nor is it comprehensible to a POSITA how such a determination can be made, in the context of the patent. Because the resistance region is formed from the electrically conductive layers, it must be in the same plane as the electrically conductive layers. Further, because the resistance region is in the same plane as the electrically conductive layers, the line that forms the direction of the resistance region's taper must be part of the plane that forms the electrically conductive layers. Thus, the claim limitation that the resistance region's taper must be parallel to the electrically conductive layers means that the line defining the taper's direction (which is in the electrically conductive layers) must be parallel to the plane of the electrically conductive layers. There is no understood concept in the art that would allow a POSITA to discern what direction would satisfy the claim limitation of the taper being "parallel" to the electrically conductive layers versus not "parallel" to the electrically conductive layers in this context. When a line lies in a plane, whether that line is parallel to or not parallel to that plane is not a meaningful distinction.

176. To make an analogy, if a circular pizza is sliced twice, once vertically and once horizontally, the top-right slice will be made of the pizza layers (like the resistance region is made of the electrically conductive layers) and it will have a taper (from the crust of the pizza in to the

Pictiva EX2016
Samsung v Pictiva
IPR2024-01095

center). However, requiring that the taper of the pizza slice be in a direction "parallel" to the layers of the pizza does not make sense. The pizza slice can be rotated in any direction and the direction of the slice's taper is still equally "parallel to" (or "not parallel to") the layers of the pizza.

177. Thus, there is no way for a POSITA to determine with reasonable certainty the scope of claim 3.

178. More specifically, there are two ways to look at whether the line of the taper's direction is parallel to the plane of the electrically conductive layers, of which that line is a part. First, geometrically, a line that is part of a plane is not typically considered "parallel" to that plane because the line instead lies within the plane. According to this understanding, there is no way for the taper to have a direction that is parallel to the electrically conductive layers because that direction is in the layers rather than parallel to the layers, and thus there is no way for the relevant claim limitation to be satisfied. Second, one could argue that the line of the taper's direction is parallel to the electrically conductive layers because, for example, the direction can be indicated by a line above those layers (like how a minute hand on a clock indicates a direction on the clockface, while being parallel to and above the clockface). Under this understanding, the claim limitation does not make sense because any direction of the taper would be equally parallel to (or not parallel to) the electrically conductive layers, and thus the substance of the claim limitation cannot be resolved.

179. I wish to note that it is common to define mathematical planes by their surface-normal vector. Accordingly, the direction of the vector associated with the plane is directed along the direction normal (perpendicular) to the plane. Applying this principle to a layer would associate a surface-normal direction with the layer. This creates ambiguity when determining the direction of a layer in this context.

Pictiva EX2016
Samsung v Pictiva
IPR2024-01095

F. <u>"second trench" and "third trench"</u>

Term	Pictiva's Construction	Samsung's Construction
"second trench" (cl. 3)	plain and ordinary meaning to a person of ordinary skill in the art in light of the specification, where the recited first/second/third trench need not be different in properties	"second trench in the first or second electrically conductive layer, or in both such layers."
"third trench" (cl. 3)	plain and ordinary meaning to a person of ordinary skill in the art in light of the specification, that is, where the recited first/second/third trench need not be different in properties	"third trench in the first or second electrically conductive layer, or in both such layers."

180. Claim 1 contains the term "first trench," and the claim language specifies, to some degree, in what material and where that "first trench" is to be formed. Specifically, claim 1 requires: "forming a ***first trench*** in the first and second electrically conductive layers such that the substrate is exposed in the ***first trench***, wherein the ***first trench*** separates a first contact region from a second contact region." '492 patent at cl. 1 (emphasis added).

181. Further, the specification sets forth how the first trench can "delimit" one region of the disclosed structure from another: "The first trench 24 separates a first contact region 16 from a second contact region 18. The first trench 24 can be part of a trench structure, which partly or completely delimit for example the first and/or second contact region 16, 18 in the planes of the two electrically conductive layers 12, 14." '492 patent at 11:40-44 (referring to Figure 4, below).

Fig. 4

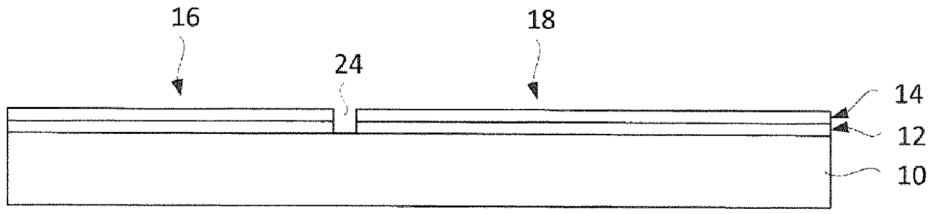

Pictiva EX2016
Samsung v Pictiva
IPR2024-01095

182. Claim 3 states: "The method as claimed in claim 1, wherein, before the dielectric is applied, a ***second trench*** and at least one ***third trench*** are formed, which delimit a resistance region, which comprises a part of the first and second electrically conductive layers." '492 patent at cl. 3 (emphasis added). In my opinion, the language of claim 1 and claim 3, read in the context of the rest of the intrinsic record, requires that the second and third trench each be in either first electrically conductive layer, the second electrically conductive layer, or both. This is in contrast to the second and third trench being in some material other than the first or second electrically conductive layers; I do not understand this to be possible under the language of the specification and the claims.

183. First, the language at the beginning of claim 3 requires the second and third trench to be in the first and second electrically conductive layers (or both). The second and third trench are to be formed "before the dielectric is applied" in claim 1. Claim 1, in turn, refers to only three structures or materials "before the dielectric is applied": (1) a first electrically conductive layer; (2) a second electrically conductive layer; and (3) a substrate. Thus, these three materials are the only disclosed materials in which the second trench and third trench could possibly be formed. According to the disclosures in the patent, the second and third trenches are to be formed in the first and second electrically conductive layers, and not in the substrate. The patent and prosecution history nowhere suggest that any trenches would (or could) be made in the substrate, and indeed, making the second or third trench in the substrate would be contrary to the understanding of a POSITA in the context of the patent and the prosecution history. The purpose of the trenches, in the claimed invention, is to create electrical separation between portions of the first and second electrically conductive layers (*see* Figure 4, and associated discussion, above), and all disclosed embodiments in the '492 patent achieve this purpose. Making trenches in the substrate (but not in

Pictiva EX2016
Samsung v Pictiva
IPR2024-01095

the first or second electrically conductive layers) would serve no purpose discernable from the patent (but such a trench in the substrate could destroy the structural integrity of the claimed invention by breaking it apart).

184. For example, Figure 4 (above) and Figure 9 (below) show the second trench (40) and third trench (42) as akin to the first trench (24), and all three are shown as trenches in the first electrically conductive layer (12) and second electrically conductive layer (14); none of the three trenches are shown in the substrate (10).

Fig. 9

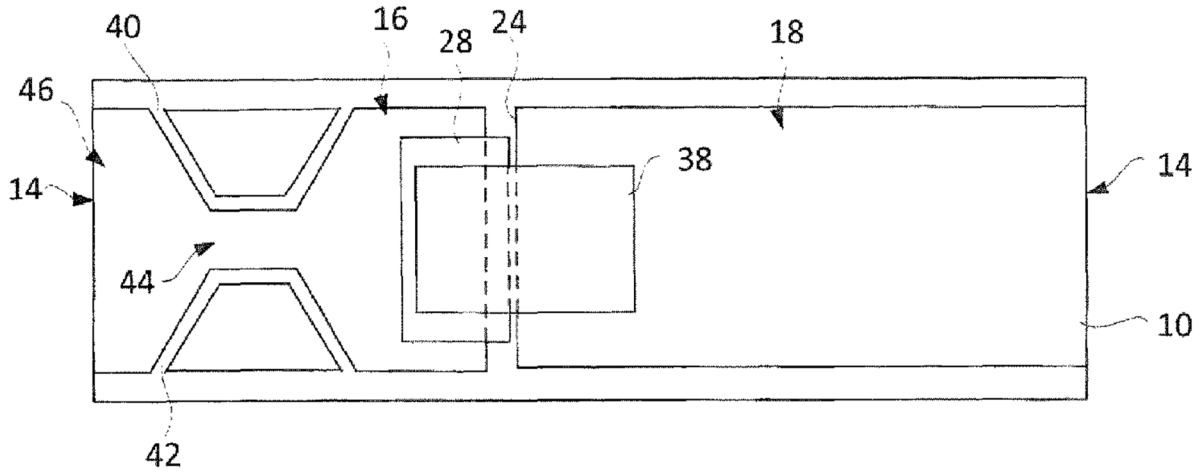

185. Second, according to language in claim 3, the second and third trench "delimit a resistance region, ***which comprises a part of the first and second electrically conductive layers***." '492 patent at cl. 3 (emphasis added). For the second and third trenches to delimit a region in the first and second electrically conductive layers, those trenches must be in those electrically conductive layers. The only form of "delimiting" disclosed in the patent or the prosecution history is the separation of two portions of the first and second electrically conductive layers with a trench. *See* Figure 4 and preceding language from the specification, above. Thus, for the first and second

Pictiva EX2016
Samsung v Pictiva
IPR2024-01095

trenches to delimit a resistance region in the first and second electrically conductive layers, those two trenches must be formed in the first and second electrically conductive layers.

186. In my opinion as a POSITA, a POSITA who reads claim 3 of the ’492 patent in the context of the patent as a whole and the prosecution history would understand the “second trench” and “third trench” to be made in either the first electrically conductive layer, the second electrically conductive layer, or both, because the claim language implies that understanding and there is no other disclosed material in which it would be feasible or practically possible to form those trenches.

G. **“applying an electrically conductive electrode layer in a structured fashion to the dielectric above the first contact region and to the second contact region”; “an electrically conductive electrode layer, which is applied in a structured fashion to the dielectric above the first contact region and to the second contact region”; “an electrically conductive electrode layer, which is applied in a structured fashion on the dielectric above the first contact region and at least partly on the second contact region”**

Term	Pictiva’s Construction	Samsung’s Construction
“applying an electrically conductive electrode layer in a structured fashion to the dielectric above the first contact region and to the second contact region” (cl. 1)	plain and ordinary meaning to a person of ordinary skill in the art in light of the specification, with “applying … in a structured fashion” as construed above; no other parts require construction	“applying an electrically conductive electrode layer in a structured fashion to the dielectric above, ***and insulated from,*** the first contact region, and to the second contact region.” (emphasis added)
“an electrically conductive electrode layer, which is applied in a structured fashion to the dielectric above the first contact region and to the second contact region” (cl. 10)	plain and ordinary meaning to a person of ordinary skill in the art in light of the specification, with “applied … in a structured fashion” as construed above; no other parts require construction	“an electrically conductive electrode layer, which is applied in a structured fashion to the dielectric above***, and insulated from***, the first contact region, and to the second contact region” (emphasis added)
“an electrically conductive electrode layer, which is applied in a structured fashion on the dielectric above the	plain and ordinary meaning to a person of ordinary skill in the art in light of the specification, with “applied … in a structured fashion” as	“an electrically conductive electrode layer, which is applied in a structured fashion on the dielectric above***, and insulated from,*** the first

Pictiva EX2016
Samsung v Pictiva
IPR2024-01095

first contact region and at least partly on the second contact region" (cl. 16)	construed above; no other parts require construction	contact region, and at least partly on the second contact region" (emphasis added)

187. The above claim elements, in claims 1, 10, and 16, all require that an "electrically conductive electrode layer" be applied "in a structured fashion" on or to "the dielectric above the first contact region." In my opinion, in isolation, this claim language is unclear and ambiguous to a POSITA because it does not indicate where the electrically conductive electrode layer is to be applied with respect to the other claimed structures. While the claim language states that the application of the electrically conductive electrode layer is to be "in a structured fashion," "in a structured fashion" means (in part) that "[t]he area to be coated is thus coated only in partial regions dependent on the desired structure." '492 patent at 2:3-4. Thus, the claim language at issue leaves unclear ***which*** "partial regions" are to be coated, and ***what*** the desired structure is. In other words, the claim language at issue requires that the electrically conductive layer be applied in a particular place, to create a particular structure, but the claim language does not specify where that place is or what that structure is.

188. However, in my opinion, reading this claim language in the context of the patent as a whole makes clear that this claim language requires that the electrically conductive electrode layer be applied to the dielectric material such that the electrically conductive electrode material is not in electrical contact with the underlying first contact region—that is, the claim language requires that the electrically conductive electrode layer be ***insulated from*** the first contact region.

189. Figure 7 is generally illustrative:

Pictiva EX2016
Samsung v Pictiva
IPR2024-01095

Fig. 7

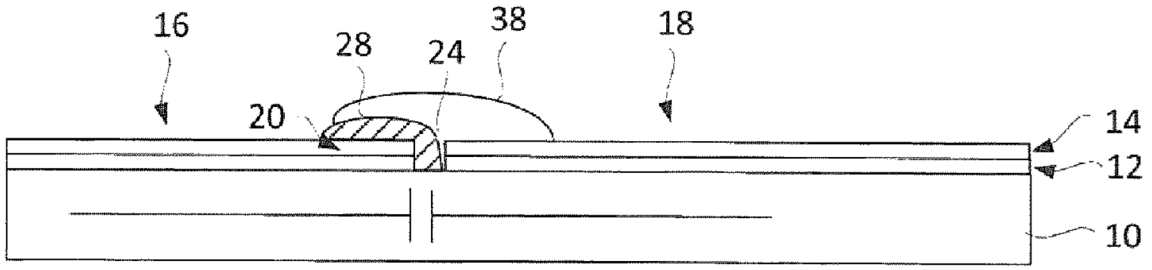

190. In this figure, 16 is the "first contact region"; 18 is the "second contact region"; 28 is the dielectric, and "an electrode layer 38 is applied in a structured fashion on the dielectric 28 and a part of the second contact region 18." '492 patent at 12:29-31. The specification further explains: "The first contact region 16 between the substrate 10 and the electrode layer 38 serves as a first electrode, for example as an anode, of the passive electronic component. The electrode layer 38 on a side of the dielectric 28 facing away from the substrate 10 serves as a second electrode, for example as a cathode, of the passive electronic component." *Id.* at 12:31-36. Thus, in this figure, the first contact region 16 and electrode layer 38 are different electrical contact points for an electronic component, and they are separated by a dielectric (i.e., insulating) material, 28. While I do not understand the claims to be limited to the structure depicted in Figure 7, this figure helps explain the structures referenced in the claim language.

191. The claims at issue all expressly require that the "dielectric electrically insulates the first contact region from the second contact region." '492 patent at cls. 1, 10, 16. Such insulation is only possible if the electrode layer is insulated from the first contact region (as in Samsung's proposed constructions) because, if the electrode layer is in electrical contact with the first contract region, then the first contact region and second contact region will be in electrical contact with one another via the electrode layer (and the dielectric would not "insulate" "the first contact region from the second contact region").

Pictiva EX2016
Samsung v Pictiva
IPR2024-01095

192. More specifically, the claim language at issue requires the electrically conductive electrode layer be applied (in a structured fashion) (1) on or to the dielectric, above the first contact region, and (2) to the second contact region. Because the electrode layer is "electrically conductive" (under the claim language), it will electrically connect the materials that the electrode layer touches. Thus, in understanding how the application of the electrode layer "in a structured fashion" is to be performed under the claim language, a POSITA would seek to resolve one fundamental question: which of the claimed structures does the electrode touch, and which of the claim structures does it not touch? The claim language is explicit that the electrode layer touches the dielectric (i.e., the insulator) and it touches the second contact region. The only remaining question, then, is: does the electrode layer touch the other structure present, that is, the first contact region? The claim language that the "dielectric electrically insulates the first contact region from the second contact region" resolves that question: the electrode layer cannot touch the first contact region, because if it did, the dielectric would not insulate the first contact region from the second contact region; the electrode layer would electrically connect those two regions. In my opinion, a POSITA would understand the claim language to require that the electrically conductive electrode layer be insulated from the first contact region because if it were not, then the claim language requiring the dielectric to insulate the first contact region from the second contact region would not be satisfied. Further, an interpretation of the claim term that allows the electrically conductive electrode layer to be in electrical contact with the first contract region would render meaningless, from a technical perspective, the claim requirement that the "dielectrically insulates the first contact region from the second contact region" because the dielectric cannot insulate those two regions if another material electrically connects them. I understand that claim language should generally not be interpreted to be superfluous or meaningless.

Pictiva EX2016
Samsung v Pictiva
IPR2024-01095

193. The dielectric claimed in claims 1, 10, and 16 fundamentally serves to insulate the first contact region and the second contact region (as required explicitly by the claim language), and to do so, the electrode layer must be insulated from the first contact region, as described above. Therefore, application of the electrode layer "in a structured fashion," as required by the relevant claim language, means that the electrode layer will be applied such that it remains insulated from the first contact region.

194. Disclosures throughout the patent confirm that the first contact region is to remain insulated from the second contact region (and thus, the electrode layer must be insulated from the first contact region), and the patent nowhere indicates or suggests that the electrode layer can be in contact with the first contact region. *See, e.g.*, '492 patent at 1:58-65 ("A dielectric is applied in a structured fashion to the second electrically conductive layer in the first contact region and the substrate in the trench such that the dielectric electrically insulates the first contact region from the second contact region. An electrically conductive electrode layer is applied in a structured fashion to the dielectric above the first contact region and to the second contact region."); *id.* 6:60-7:1 ("A dielectric is applied in a structured fashion on the second electrically conductive layer in the first contact region and at least partly on the substrate in the first trench such that said dielectric electrically insulates the first contact region from the second contact region. An electrically conductive electrode layer is applied in a structured fashion on the dielectric above the first contact region and on the second contact region."); *id.* 3:38-47 ("In various embodiments, a first electrode of a capacitor is formed by the first contact region between the dielectric and the substrate and a second electrode of the capacitor is formed by the electrode layer on a side of the dielectric facing away from the first contact region. When an electrical voltage is applied to the first and second contact regions, the capacitor is charged, in particular the electrodes are charged, and an electric

Pictiva EX2016
Samsung v Pictiva
IPR2024-01095

field forms between the electrodes. The electrical energy in the electric field existing between the charged electrodes is stored in the charged capacitor."); *id.* 11:47-56 ("FIG. 5 shows the substrate 10 and the first and second electrically conductive layers 12, 14, wherein one embodiment of a dielectric 28 is applied in a structured fashion to the second electrically conductive layer 14 in a manner adjoining the trench 24. The dielectric 28 can be an electrically insulating substance, for example, which can subsequently prevent a direct current flow between the first or second electrically conductive layer 12, 14 in the first contact region 16 and the first or second electrically conductive layer 12, 14 in the second contact region 18.").

X. <u>'425 Patent Terms</u>

A. <u>"the organic layer sequence comprises at least one radiation-emitting region configured to generate electromagnetic radiation in a spectral range from infrared radiation to UV radiation during operation"</u>

Claim	Pictiva's Construction	Samsung's Construction
1	plain and ordinary meaning to a person of ordinary skill in the art in light of the specification, where "a spectral range from infrared radiation to UV radiation" refers to spectral range from a wavelength in the infrared radiation range (e.g., between about 730 n.m. to about 300 micrometer) to a wavelength in the UV radiation (e.g., between about 400 nm to about 40 nm). No other terms require construction.	"the organic layer sequence comprises at least one radiation-emitting region configured to generate electromagnetic radiation in a spectral range that includes the full spectrum from infrared radiation to UV radiation during operation"

195. In my opinion, the term "the organic layer sequence comprises at least one radiation-emitting region configured to generate electromagnetic radiation in a spectral range from infrared radiation to UV radiation during operation," as used in the '425 patent and as understood by a POSITA at the time of the alleged invention, refers to "the organic layer sequence comprises

at least one radiation-emitting region configured to generate electromagnetic radiation in a spectral range that includes the full spectrum from infrared radiation to UV radiation during operation."

196. A POSITA at the time of the alleged invention would understand that "the organic layer sequence comprises at least one radiation-emitting region configured to generate electromagnetic radiation in a spectral range from infrared radiation to UV radiation during operation" is "the organic layer sequence comprises at least one radiation-emitting region configured to generate electromagnetic radiation in a spectral range that includes the full spectrum from infrared radiation to UV radiation during operation." The organic layer sequence must generate electromagnetic radiation in the spectral range from infrared radiation to UV radiation during operation. This claim term states that the radiation-emitting region is configured to generate electromagnetic radiation in the spectral range during operation. A POSITA would understand that configuring the radiation region to generate electromagnetic radiation in the spectral range from infrared radiation to UV radiation during operation means that the radiation is this full range during operation. By stating "during operation," a POSITA would understand that the spectral range emitted during operation is the full spectral range—not a subrange.

197. My opinion that "the organic layer sequence comprises at least one radiation-emitting region configured to generate electromagnetic radiation in a spectral range from infrared radiation to UV radiation during operation" is "the organic layer sequence comprises at least one radiation-emitting region configured to generate electromagnetic radiation in a spectral range that includes the full spectrum from infrared radiation to UV radiation during operation" is confirmed by the '425 patent specification. For example, the '425 patent is directed to light devices for broad use that would need broad spectrum spectral ranges that include the entire range from infrared radiation to UV radiation during operation. For example, the '425 patent is directed to "luminaires

Pictiva EX2016
Samsung v Pictiva
IPR2024-01095

[that] can be, for example, luminaires which are used as an alarm clock, which form part of a shower cubicle, which form part of a shower head, which serve as solar protection, which serve as rain protection, which are provided for general lighting which can be used in mobile fashion and/or which inherently combine a plurality of these functions." '425 patent at 1:43-49. Given the broad applications for the '425 patent luminaires and they "inherently combine a plurality" of the broad functions, a POSITA would understand that the full spectrum from infrared radiation to UV radiation would be emitted during operation.

198. Additionally, the '425 patent states that "[d]uring the operation of the organic light-emitting diode 1, electromagnetic radiation is generated in the radiation-emitting region. Therefore, the emission 108 of electromagnetic radiation occurs in the radiation-emitting region. ***Preferably, electromagnetic radiation in the spectral range of infrared radiation to UV radiation is generated in this case***." '425 patent at 24:46-54. A POSITA would understand from the '425 patent's description of the spectral range that it is the full spectrum from infrared radiation to UV radiation emitted during operation. I further note that the emission spectrum is specified to reach from the IR (infrared) to the UV, yet does not require to include IR and / or UV radiation. This means that the emission spectrum must include, at a minimum, the entire visible spectral range.

199. I disagree with Pictiva's proposed construction. A POSITA would not understand "a spectral range from infrared radiation to UV radiation" to refer to spectral range from a wavelength in the infrared radiation range (e.g., between about 730 n.m. to about 300 micrometer) to a wavelength in the UV radiation range (e.g., between about 400 nm to about 40 nm). Pictiva's proposed construction would render this limitation meaningless as it merely states that the spectral range could be any wavelength or wavelengths within the range from infrared radiation to UV radiation. A POSITA would not understand "a spectral range from infrared radiation to UV

radiation" to refer to spectral range from a wavelength in the infrared radiation range (e.g., between about 730 n.m. to about 300 micrometer) to a wavelength in the UV radiation (e.g., between about 400 nm to about 40 nm) as it is not consistent with the '425 patent's specification or the plain language of the claims.

200. Thus, it is my opinion that a POSITA at the time of the alleged invention would understand the term "the organic layer sequence comprises at least one radiation-emitting region configured to generate electromagnetic radiation in a spectral range from infrared radiation to UV radiation during operation," as used in the '425 patent means "the organic layer sequence comprises at least one radiation-emitting region configured to generate electromagnetic radiation in a spectral range that includes the full spectrum from infrared radiation to UV radiation during operation."

B. "encapsulation"

Claims	Pictiva's Construction	Samsung's Construction
1, 3-4, 18	plain and ordinary meaning to a person of ordinary skill in the art in light of the specification, that is, a material for surrounding or sealing something else	"a seal of the organic layer sequence against environmental influences"

201. In my opinion, "encapsulation" should be construed as "a seal of the organic layer sequence against environmental influences."

202. A POSITA at the time of the alleged invention would understand that "encapsulation" means "a seal of the organic layer sequence against environmental influences." The organic layer sequence in the claims must be protected from environmental influences. A POSITA would understand that "encapsulation" is the sealing of the organic layer sequence against environmental influences.

Pictiva EX2016
Samsung v Pictiva
IPR2024-01095

203. My opinion that "encapsulation" means "a seal of the organic layer sequence against environmental influences" is confirmed by the '425 patent specification. The '425 patent specification states "[t]he encapsulation forms a seal of the organic layer sequence against environmental influences." '425 patent at 1:28-38. A POSITA would understand from this disclosure in the '425 patent that "encapsulation" means "a seal of the organic layer sequence against environmental influences."

204. I disagree with Pictiva's proposed construction that "encapsulation" means "a material for surrounding or sealing something else." Pictiva's proposed construction is not how a POSITA understands encapsulation. Pictiva's proposed construction would cover any material that surrounds another material or layer and would render the limitation meaningless. Additionally, Pictiva's construction is not supported by the '425 patent.

***

I declare under penalty of perjury under the laws of the United States of America that the foregoing is true and correct to the best of my knowledge and belief.

Executed this 12th day of November, 2024, at Troy, New York.

E. Fred Schubert

Pictiva EX2016
Samsung v Pictiva
IPR2024-01095

Curriculum Vitae: E. Fred Schubert

Contact information

Department of Electrical, Computer, and Systems Engineering
Rensselaer Polytechnic Institute
110 Eighth Street, Troy, NY 12180
Telephone 518-276-8775 (office); Cell phone 518-253-3762
Email: EFSchubert@rpi.edu Homepage: http://www.rpi.edu/~schubert

Citizenship

Born in Stuttgart, Germany (1956)
Naturalized United States Citizen (1995)

Education

University of Stuttgart	Electrical Engineering	Vordiplom	(U. S. equivalent BSEE)	1978
University of Stuttgart	Electrical Engineering	Diplom Ingenieur (Honors)	(U. S. equivalent MSEE)	1981
Oregon State University	Electrical Engineering	Exchange Student		1977–1978
University of Stuttgart	Electrical Engineering	Doktor Ingenieur (Honors)	(U. S. equivalent Ph.D.)	1986

Current appointment

2002 – present: Professor, Department of Electrical, Computer, and Systems Engineering; Rensselaer Polytechnic Institute, Troy NY

Previous appointments

2002 – 2015: Head and Founder of the Future Chips Constellation; Rensselaer Polytechnic Institute

2002 – 2015: Wellfleet Senior Constellation Professor, Future Chips (Chaired Professor); Rensselaer Polytechnic Institute

2002 – 2012: Professor Department of Physics, Applied Physics, and Astronomy; Rensselaer Polytechnic Institute

2008 – 2009: Director, Founding Director, and Principal Investigator, NSF Engineering Center for Smart Lighting, Rensselaer Polytechnic Institute

2002 – 2003: Adjunct Professor, Boston University

1995 – 2002: Professor, Boston University, Department of Electrical and Computer Engineering; Director of the Semiconductor Devices Research Laboratory; Affiliated Faculty of the Photonics Center.

1988 – 1995: Member of Technical Staff; Principal Investigator; and Member of Management at AT&T Bell Laboratories in Murray Hill, New Jersey

1985 – 1987: Post-Doctoral Member of Technical Staff at AT&T Bell Laboratories in Holmdel, New Jersey.

1981 – 1985: Scientific Member of Staff in the Department of Solid-State Chemistry at the Max Planck Institute for Solid-State Research in Stuttgart, Germany. Ph.D. Dissertation title: "Modern Schottky gate field-effect transistors based on III–V semiconductors"

Fields of Technical Expertise, Hands-on Experience, and Teaching

- Expertise, hands-on experience, and teaching in semiconductor opto-electronics including the following devices: LED, semiconductor laser, vertical cavity surface-emitting laser (VCSEL), solar cell, photo-detector, LED displays, micro-LED displays, and LCD displays. The activities include the design, fabrication, processing, and packaging of the devices, and the use of the devices in circuits and systems. (1981 to present)
- Expertise, hands-on experience, and teaching in semiconductor electronics including the following devices: MESFET, HFET, MOSFET, CMOS-FET, LDD MOSFET, LD MOS FET, FinFET, GAA FET, Vertical MOSFET (high-power MOSFET), thyristor, GTO thyristor, and IGBT. The activities include the design, fabrication, processing, and packaging of the devices, and the use of the devices in discrete and integrated circuits. (1979 to present)
- Expertise, hands-on experience, and teaching in thin-film deposition of metal, semiconductor, and insulator films by PVD (physical vapor deposition) and CVD (chemical vapor deposition) including PECVD (plasma enhanced CVD), MOCVD (metal-organic CVD), ALE (atomic layer epitaxy), ALD (atomic layer deposition), and bulk crystal growth (AlN, GaN, and sapphire). Epitaxial growth of silicon, III-V arsenide, phosphide and nitride epitaxial layers on GaAs, sapphire, Si, and GaN substrates by epitaxy including molecular beam epitaxy (MBE),

Pictiva EX2016
Samsung v Pictiva
IPR2024-01095

metal-organic chemical vapor deposition (MOCVD), and vapor-phase epitaxy (VPE). High-k materials, low-k-materials, phosphors, resins, polymers, encapsulants, alloy semiconductors and their deposition technologies such as epitaxy, CVD, and PVD. Doping of semiconductors by various means including delta doping and atomic monolayer doping. (1981 to present)

- Expertise, hands-on experience, and teaching in the design, operation, and usage of semiconductor devices in lighting systems, communication systems, and power-supply systems and in the analysis and development of LED power supplies using Boost and Buck Converters. (1993 to present)

Technical Research Activities

- Design, development and fabrication of a Si pressure sensor based on the piezo-resistivity of Si using a bridge configuration of four thin-film Si resistors (1979 – 1980)
- Design of a electro-optic Mach-Zehnder Interference Modulator based on Lithium niobate ($LiNbO_3$) operating at a wavelength of 1300 nm (1980 – 1981)
- First study of hot electron effects in selectively doped $Al_xGa_{1-x}As$/GaAs heterostructures (1983)
- Demonstration and elimination of parallel conduction in $Al_xGa_{1-x}As$/GaAs heterostructures (1984)
- First analysis of semiconductors doped with simultaneously shallow and deep donors (1984).
- Development and use of thyristor circuits (including GTO thyristor circuits) for the control of a lamp heating system (1984 – 1985)
- Proposal and demonstration of the δ-doped field-effect transistor. Short-channel effects in sub-micron field-effect transistors can be reduced to their theoretical minimum by using δ-doped structures (1985)
- Development of the theory of alloy broadening in luminescence spectra of alloy semiconductors such as $Al_xGa_{1-x}As$. The current understanding of the low-temperature spectral linewidths of ternary and quaternary alloy semiconductors is based on this theoretical model. The publication analyzing the phenomenon of alloy broadening has been referenced far in excess of 100 times (1984)
- First demonstration of a light-emitting diode with a doping superlattice active region (1985)
- Application of δ-doping to selectively doped heterostructures; Demonstration of high-electron-mobility transistors (HEMTs) with highest free electron concentrations; Analysis of structures by SEM, TEM, and SIMS (1986).
- Demonstration of delta-doped non-alloyed ohmic contacts with very low contact resistance and subsequent demonstration of self-aligned field-effect transistor with delta-doped non-alloyed ohmic contacts (1986)
- Demonstration of the spatial localization of dopants within 20 Å for a number of doping elements in delta-doped semiconductors including GaAs and Si for MESFET and lightly-doped drain (LDD) MOSFET applications and the analysis of delta-doped structures by SIMS (secondary ion mass spectrometry) (with colleague Henry S. Luftman, 1983-1995)
- Significant improvement of the optical properties of doping superlattices by employment of delta doping. Improvement is demonstrated by the first observation of quantized interband transitions in the absorption (1988) and in the emission spectra (1989)
- First demonstration of tunable doping superlattice laser (1989)
- First quantitative analysis of the capacitance-voltage (CV) profiling technique in semiconductors with quantum-confined carriers. Demonstration that resolution of CV profiles in quantum-confined semiconductors is not limited to the Debye screening length (1990)
- Invention and demonstration a new concept by which heterojunction band discontinuities occurring between two different semiconductors are eliminated. The *elimination of heterojunction barriers* is based on parabolic compositional grading of doped heterojunctions. This concept is widely used in the fabrication of vertical cavity surface emitting lasers and other heterojunction devices (1991)
- Invention and first demonstration of resonant cavity light-emitting diode (RCLED) which uses photon quantization in microcavities to enhance the spontaneous emission properties (1992)
- Demonstration of giant enhancement of luminescence intensity in Er-doped Si-SiO_2 microcavities (1992)
- First demonstration of a resonant-cavity detector which is useful for wavelength-selective detection (1993)
- Demonstration of resonant-cavity light-emitting diode (RCLED) with very high brightness. The experimental brightness of the RCLED is five times higher than that of conventional LEDs. Based on calculations, the brightness of RCLEDs is expected to exceed that of conventional LEDs by more than a factor of ten (1994)
- Demonstration of delta doping in silicon for the fabrication of shallow junctions in scaled-down Si lightly-doped drain (LDD) MOSFETs for integrated circuits (Si ICs) (with colleague Dr. H. J. Gossmann, 1990 – 1995)
- Invention of a new concept, *superlattice doping*, for enhanced p-type doping of GaN. All acceptors in GaN are deep, resulting in a low electrical acceptor activation of only 5 %. The new concept of superlattice doping is expected to increase the electrical activation of acceptors by more than a factor of ten (with post-doctoral associate Dr. W. Grieshaber, 1995)

Pictiva EX2016
Samsung v Pictiva
IPR2024-01095

- Investigation of yellow luminescence in GaN and the use of microcavity effects in Ag / GaN / sapphire structures to determine the refractive index of GaN (with post-doctoral associate Dr. W. Grieshaber, 1996)
- Demonstration of the first GaN / GaInN double heterostructure laser. The laser has cleaved facets and was optically pumped. Laser action was demonstrated by (*i*) a threshold in the light-versus-current characteristic, (*ii*) spectral narrowing below *kT* above threshold, (*iii*) a TE / TM polarization ratio greater than one hundred above threshold, and (*iv*) increased slope efficiency with increasing back-side facet reflectivity (with graduate student D. A. Stocker, 1997)
- Co-inventor of photonic-crystal light-emitting diode, PC-LED, jointly with group of Prof. John D. Joannopoulos at MIT (publication by Shanhui Fan *et al*. appeared in *Physical Review Letters* in 1997; US patent 5,955,749 was issued in 1999)
- First demonstration of crystallographic etching of GaN (with graduate student D. A. Stocker, 1998). The discovery, crystallographic etching, can be implemented by wet chemical etching, including photo-enhanced electrochemical (PEC) wet etching. The discovery is widely used in the LED industry to strongly enhance light extraction from LED chips and is found in LED light bulbs.
- Experimental demonstration of a ten-fold enhancement of p-type doping activation in $Al_xGa_{1-x}N$/GaN doped superlattices as compared to bulk GaN and $Al_xGa_{1-x}N$ (with graduate students D. A. Stocker and I. D. Goepfert, 1999)
- Invention and demonstration of the photon-recycling semiconductor light-emitting diode (PRS-LED) which emits *white* light and many other colors with very high luminous performance of > 300 lm/W (with graduate students X. Guo and J. W. Graff, 1999). Invention of the monolithically integrated GaInN/GaN PRS-LED (with graduate students X. Guo and J. W. Graff, 2000)
- Invention and demonstration of polarization-enhanced ohmic contacts in p-type and n-type GaN (with graduate students Y.-L. Li and J. W. Graff 2000)
- Invention and demonstration of AlGaInP light-emitting diode with omni-directional reflector (ODR) for high light extraction efficiency (with post-doctoral associate Th. Gessmann and graduate student J. W. Graff, 2001)
- Developed novel model for high diodes ideality factors (n >> 2.0) in UV LEDs based on multiple rectifying elements (with graduate student J. M. Shah and Prof. Th. Gessmann, 2003)
- Developed new class of materials, low-refractive index materials, or low-*n* materials, with an unprecedented low refractive index of n < 1.10; use of these materials as low-*k* materials for inter-metal-layer dielectrics in Si lightly-doped drain (LDD) MOSFETs in conjunction with ALD-deposited high-*k* gate dielectric MOSFETs for integrated circuits (Si ICs) (with Dr. Jong Kyu Kim, "JQ" Xi, Professors Joel Plawsky, Bill Gill, starting in 2003)
- Developed theory for temperature coefficient of forward voltage in light-emitting diodes, particularly UV light-emitting diodes (with graduate student Yangang "Andrew" Xi, Dr. Jong Kyu Kim, and collaborators at Sandia National Laboratories, 2004, 2005)
- Invented highly efficient "remote phosphor configurations" in white light-emitting diodes (with Jong Kyu Kim, Hong Luo, and collaborators at SAIT-Samsung) (2004, 2005)
- Discovered whispering gallery modes in white LEDs with remote phosphors (with graduate student Hong Luo, Jong Kyu Kim, Yangang "Andrew" Xi, and collaborators at SAIT-Samsung, 2005)
- Developed graded-index antireflection coatings that, unlike conventional anti-reflection coatings, have broadband omni-directional characteristics; the graded-index antireflection coatings use novel low-*n* materials (with Jingqun "JQ" Xi, Jong Kyu Kim, 2007)
- Developed efficiency-droop reducing GaInN / GaInN and GaInN / AlGaInN LED active regions grown by MOCVD and ALE that were demonstrated to reduce the efficiency droop by as much as 40% (with Jong Kyu Kim, Martin F. Schubert, Di Zhu, Jiuru Xu, Mary Crawford, and Dan Koleske, starting in 2007)
- Developed analytic model for efficiency droop based on drift-induced reduction of the carrier-injection efficiency (with Guan Bo Lin, Jaehee Cho, and others, 2012)

Honors and awards

- Google Scholar profile, including the Hirsch-index (h-index) can be found at < http://scholar.google.com > under profile "E. Fred Schubert"
- Elected to *Senior Member* of the *IEEE* "in recognition of professional standing" (1993)
- Recipient of the Literature Prize of the *Verein Deutscher Elektrotechniker* (*VDE*) for "Doping in III–V semiconductors" (Cambridge University Press, Cambridge, 1993). Citation: "The book concerns all aspects of doping in III–V semiconductors. Fundamental, practical, and technological issues of doping are addressed. The book covers the basic theory of shallow donors, shallow acceptors, deep levels, and their influence on the free carrier concentration. It also discusses doping during growth, epitaxy, diffusion, and ion implantation. In the field of semiconductor devices, the book emphasizes applications requiring highly controlled doping distributions. It is an excellent monograph equally suited for study, research, and industry" (1994)

Pictiva EX2016
Samsung v Pictiva
IPR2024-01095

- Elected as a member of the *Bohemian Physical Society* (Cornell University, Ithaca, NY). Citation: "For seminal contributions to the control of spontaneous emission by use of wavelength-size optical cavities, specifically the first demonstration in a glass host using rare earth implanted Si/SiO_2 resonant microcavities" (1994)
- Listed in "Who's Who In Science And Engineering" and "Who's Who in America" published by *Marquis Who's Who*, publishers of the original *Who's Who in America*. (*Marquis Who's Who*, New Providence, NJ) ISBN 0-8379-5755-9 (1996 – present)
- Elected Fellow *of the SPIE* "For pioneering research in semiconductor doping and sustained contributions to the development of high-efficiency light-emitting diodes and lasers". According to the Society's bylaws, a Fellow "shall be distinguished through his achievements and shall have made outstanding contributions in the field of optics, or optoelectronics, or in a related scientific, technical, or engineering field" (1999)
- Recipient of the *Alexander von Humboldt Senior Research Award* of the Alexander von Humboldt Foundation, a Bonn-based non-profit organization promoting the exchange of scientific knowledge between German and highly qualified foreign scholars. According to the Alexander von Humboldt Foundation, academic qualification is the only selection criterion for the award. The award resulted in two extended visits with the Microoptics Laboratory of Professor Jürgen Jahns at the University of Hagen, Germany (1999)
- Elected to *Fellow of the IEEE* "for contributions to semiconductor doping and resonant-cavity devices". According to the IEEE definition "the grade of Fellow is one of unusual professional distinction conferred by the Board of Directors only upon a person of extraordinary qualifications and experience" (1999)
- Listed in the "Dictionary of International Biography, 29th Edition" published by the *International Biography Center*, Cambridge, United Kingdom (2000)
- Recipient of the 2000 *Discover Magazine Award for Technological Innovation* presented by the *Christopher Columbus Foundation* in the category "Energy". The prize was awarded "for the invention and demonstration of the photon recycling semiconductor light-emitting diode", an all-semiconductor LED capable of emitting white light with very high efficiency, see < www.discover.com/awards > (2000)
- Recipient of the *RD100 Award* of the R&D Magazine that honors the "100 most technologically significant products of the year" (with Klaus Streubel of Osram-Sylvania Corp. and Rickard Marcks von Wurtemberg of Mitel Corp.). The prize was awarded for the "*Resonant-cavity light-emitting diode*" that uses enhanced spontaneous emission occurring in resonant cavities. The device is used in plastic optical fiber communication links, in telescopes for rifles, and many other applications (2000).
- Elected to *Fellow of the OSA* "for the invention and demonstration of the resonant-cavity LED and the photon-recycling semiconductor LED". OSA Fellows are elected by the OSA Board of Directors (2001)
- Recipient of the Boston University Provost Innovation Fund Award (Provost Dennis D. Berkey) valued at $ 25,000 for research and development of promising technologies (2001)
- Elected to *Fellow of the APS* "for pioneering contributions to the doping of semiconductors including delta doping, doping of compositionally graded structures resulting in the elimination of band discontinuities, and superlattice doping to enhance acceptor activation" (2001)
- Honored with RPI Medal as Senior Constellation Chair during Investiture Ceremony (2002)
- Received "2002 Rensselaer Polytechnic Institute Trustee Faculty Achievement Award" (2002)
- Inducted as Wellfleet Senior Constellation Professor, Future Chips, Rensselaer Polytechnic Institute, November 21 (November 2003)
- Distinguished Lecturer of the IEEE Electron Devices Society (2003–2006)
- Elected member in Eta Kappa Nu (2004)
- "Best Oral Presentation Award" was won by Ph. D. student Hong Luo (who was the presenter), J. K. Kim, Y. A. Xi, J. M. Shah, Th. Gessmann and E. F. Schubert "Improvement of extraction efficiency of GaInN light-emitting diodes by employment diffuse omni-directional reflectors" *Connecticut Microelectronics & Optoelectronics Consortium (CMOC)*, 14th annual symposium, New Haven CT, March 17 (March 2005).
- "Best Student Poster Award" of the *International Semiconductor Device Research Symposium (ISDRS)* was won by Ph. D. student J.Q. Xi (presenter), Jong Kyu Kim, Dexian Ye, Jasbir S. Juneja, T.-M. Lu, Shawn-Yu Lin, and E. Fred Schubert "Optical Thin Films with Very Low Refractive Index and Their Application in Photonic Devices", *International Semiconductor Device Research Symposium (ISDRS)*, Dec. 7 – 9, Bethesda, MD (December 2005)
- "MRS Silver Award" of the Materials Research Society was won by Ph. D. student Yangang Andrew Xi (who was the presenter), K. X. Chen, F. Mont, J. K. Kim, C. Wetzel, E. F. Schubert, W. Liu, X. Li, J. A. Smart "Extremely high quality AlN grown on (0001) sapphire by using metal-organic vapor-phase epitaxy" *Materials Research Society (MRS) Fall Meeting*, Boston MA, November 27 – December 1 (2006) Boston MA (December 2006)
- "25 Most Innovative Micro- and Nano-Products of 2007 Award" in July 2007 issue of *R&D Magazine* and *Micro/Nano Newsletter*. This recognition was given for the "Non-Reflective Coating" product that was published in *Nature Photonics* in 2007; full citation: Xi, J.-Q., Martin F. Schubert, J. K. Kim, E. F. Schubert,

Pictiva EX2016
Samsung v Pictiva
IPR2024-01095

Minfeng Chen, Shawn-Yu Lin, Wayne Liu, and Joe A. Smart "Optical thin-film materials with low refractive index for broadband elimination of Fresnel reflection" *Nature Photonics* **1**, 176, March 2007 (July 2007)

- "Scientific American 50 Award" of 2007, as published in the January 2008 issue of *Scientific American*. According to the *Scientific American Magazine*, this award "celebrates visionaries from the worlds of research, industry and politics whose recent accomplishments point toward a brighter technological future for everyone" (January 2008)
- "Editors' Choice" of *Science Magazine*, *Science*, Volume **319**, page 1163, February 29 (February 2008). This distinction was awarded for the publication: Jong Kyu Kim et al., "Light-extraction enhancement of GaInN light-emitting diodes by graded-refractive-index indium tin oxide anti-reflection contact" that appeared in *Advanced Materials* **20**, 801, 2008 (February / March 2008)
- Received "2008 Rensselaer Polytechnic Institute Trustee Faculty Achievement Award" (2008)
- "Best Oral Presentation Award" won by David J. Poxson (who was the presenter), Frank W. Mont, Jong Kyu Kim, and E. Fred Schubert "Multilayer nano-structured anti-reflection coating with broad-band omni-directional characteristics" *Connecticut Microelectronics and Optoelectronics Conference* (*CMOC*), University of Connecticut, Storrs, Connecticut, April 9 (April 2008)
- "Best Oral Presentation Award" for presentation: David Meyaard, Sameer Chhajed, Jaehee Cho, E. Fred Schubert, Jong Kyu Kim, Daniel D. Koleske, and Mary H. Crawford "Temperature-dependent light-output characteristics of GaInN light-emitting diodes with different dislocation densities" *Connecticut Microelectronics and Optoelectronics Consortium* (CMOC) Symposium, New Haven CT, March 2 (March 2011)
- Identified as top 1% of patentees in the field of optoelectronics by study conducted by Professor Erica Fuchs of Carnegie Mellon University under a study supported by the US National Science Foundation (July 2011)
- Received "2012 Rensselaer Polytechnic Institute Trustee Faculty Achievement Award" (November 2012)
- My "LinkedIn" profile was one of the top 10% most viewed "LinkedIn" profiles during 2012 (January 2013)
- My graduate student, Mr. Ming Ma, received the $ 30,000.00 Lemelson-Rensselaer Student Prize for the invention entitled "Graded-refractive-index (GRIN) structures for brighter and smarter light-emitting diodes"; The Prize is awarded annually by the Lemelson Foundation (March 2013)
- Received the IEEE Life Fellow Award (2022)

Service to the technical community

- Current or former member of the *American Physical Society* (Member of the *Division of Materials Physics*, Member of the *Division of Condensed Matter Physics*), *Institute of Electrical and Electronics Engineers*, *Materials Research Society*, *Optical Society of America*, *Society for Optical Engineering* (*SPIE*), and the *Verein Deutscher Elektrotechniker*
- Co-author of hundreds of research articles, co-inventor of more than 30 United States patents, and numerous foreign patents (1981 – present)
- Gave many invited talks at scientific conferences organized by the *American Physical Society*, *Institute of Electrical and Electronic Engineers*, *Materials Research Society*, *SPIE* (*The International Society for Optical Engineering*), *Electrochemical Society*, *American Vacuum Society*, *Engineering Foundation*, and other professional societies (1985 – present).
- Co-editor (with A. M. Glass) of a Special Issue of the *Journal of Optical and Quantum Electronics* (Vol. **22**, 1990) on "Charge-transport assisted optical non-linearities in semiconductors" (1990)
- Symposium chair of the *American Vacuum Society Greater New York and New Jersey Chapter* on "Epitaxially grown semiconductors with atomic level control" (1991).
- Moderator of MRS Internet discussion on "Doping and Dopants in GaN" (MRS Internet Journal, 1995 – 1997)
- Member of review panels of the National Science Foundation (1995 – present)
- Conference Chair of SPIE Photonics West conference on "Light-emitting diodes: Research, Manufacturing, and Applications" San Jose, CA (1997)
- Technical work has been featured in popular journals, magazines and newspapers including the New Scientist, Discover Magazine, Wall Street Journal, Boston Globe, Focus, and on National Public Radio (1996 – present)
- Conference Chair of SPIE Photonics West conference on "Light-emitting diodes: Research, Manufacturing, and Applications" San Jose, CA (1998)
- Program Committee Member: IEEE IEDM, International Electron Devices Meeting (1999 and 2000)
- Conference Chair of SPIE Photonics West conference on "Light-emitting diodes: Research, Manufacturing, and Applications" San Jose, CA (1999)
- Program Committee Member: ISBLLED, International Symposium on Blue Laser and Light-Emitting Diodes, Berlin, Germany, March 5 – 10 (2000)
- Conference Chair of SPIE Photonics West conference on "Light-emitting diodes: Research, Manufacturing, and Applications" San Jose, CA (2000)

Pictiva EX2016
Samsung v Pictiva
IPR2024-01095

- Conference Chair and Co-Organizer of the TMS- and ONR-sponsored conference on "Doping, Dopants, and Low Field Carrier Dynamics in Wide Gap Semiconductors", Copper Mountain, Colorado, April 2 - 6 (2000)
- Chair, IEEE LEOS, Central New England Chapter. During my tenure as Chair, the Central New England Chapter won the IEEE LEOS Chapter award for the highest membership growth (1999 – 2000)
- Expert Witness involving semiconductor materials, devices, and packaging including elemental and compound semiconductors such as Si, SiGe, SiC, as well as III–V arsenides, phosphides and nitrides (1998 – present)
- Member of the Board of Governors, IEEE Laser and Electro-Optics Society (LEOS) (1999 – 2000)
- Member of the Optoelectronics Industry Development Association (OIDA) Roadmap Panel on Solid-State Lighting, Albuquerque NM Oct. 26 – 28 (2000)
- Conference Chair of SPIE Photonics West conference on "Light-emitting diodes: Research, Manufacturing, and Applications" San Jose, CA (2001)
- Panel Member of National Research Council meeting on "Solid-State Lighting:" held at NAS and NAE, Washington DC, March 26 (2001)
- Program Committee Member of SPIE Photonics West conference on "Laser and LED Applications" chaired by Dr. Kurt Linden, San Jose CA Jan (2002)
- Conference Chair of SPIE Photonics West conference on "Light-emitting diodes: Research, Manufacturing, and Applications" San Jose, CA (2002)
- Program Committee Member: ISBLLED, International Symposium on Blue Laser and Light-Emitting Diodes, Cordoba, Spain, March 11–15 (2002)
- Program Committee Member for subcommittee on "Semiconductor lasers and LEDs" for OSA Conference on Lasers and Electro-Optics and Quantum Electronics and Laser Science Conference (CLEO / QELS) (2002 – 2003) Baltimore MD June 1–6 (2003)
- Reviewer for the National Research Council of report entitled "Partnerships for Solid-State Lighting: Report of a Workshop" authored by the Board on Science, Technology, and Economic Policy. This report is forwarded to the US Congress for the initiation of a national Solid-State Lighting Initiative. (2002)
- Program Committee Member "Lester Eastman conference on high performance devices" University of Delaware, Newark, Delaware, August 6 – 8 (2002)
- Conference Chair of SPIE Photonics West conference on "Light-emitting diodes: Research, Manufacturing, and Applications" San Jose CA (2003)
- OIDA Next Generation Lighting (NGL) Consortium. Member of "Light-Emitting Diode" Committee (2003)
- Program Committee Member, International Semiconductor Device Research Symposium (ISDRS) Washington DC, Dec. 8 – 12 (2003)
- Program Committee Member of "Display and Solid-State Lighting Devices" conference for OSA/IEEE Conference on Lasers and Electro-Optics (CLEO) (2003 – 2004)
- Elected Member of the IEEE Electron Device Society Administration Committee (IEEE AdCom) (2003 – 2008)
- Conference Chair of SPIE Photonics West conference on "Light-emitting diodes: Research, Manufacturing, and Applications" San Jose CA (2004)
- Program Committee Member "Fourth International Conference on Solid-State Lighting" August 2 – 6 Denver, CO (2004)
- Program Committee Member for the "Blue 2004: Advanced LEDs and Lasers Conference" Hsinchu, Taiwan, May 10 – 12 (2004)
- Conference Chair of SPIE Photonics West conference on "Light-emitting diodes: Research, Manufacturing, and Applications" San Jose CA (2005)
- Program Committee Member "International Semiconductor Device Research Symposium" December 7 – 9 Washington, DC (2005)
- Chair of "Display and Solid-State Lighting Devices" conference of OSA/IEEE Conference on Lasers and Electro-Optics (CLEO) (2005)
- Best Oral Presentation Award (Presenter: Hong Luo) at *Connecticut Microelectronics & Optoelectronics Consortium* (CMOC), 14th annual symposium, New Haven CT, March 17 (March 2005)
- Conference Chair of MRS Spring meeting "Symposium DD: Solid-State Lighting Materials and Devices" San Francisco, April 17 – 21 (April 2006)
- Member on the International Advisory Committee of *First International Conference on Display LEDs* (ICDL 2007), Seoul, Korea, January 31 to February 2 (2007)
- Member, Program Committee of *SPIE Photonics West* conference "Light-Emitting Diodes: Research, Manufacturing, and Applications XI" San Jose, CA, January 20 – 25 (2007)
- Program Chair of *SPIE Photonics West* conference "Semiconductor Lasers and LEDs" San Jose, CA, January 20 – 25 (2007)
- Member, Executive Organizing Committee *SPIE Photonics West* conference "LASE 2007" San Jose, CA, January

Pictiva EX2016
Samsung v Pictiva
IPR2024-01095

20 – 25 (2007)

- Opto Track Chair of *SPIE Photonics West* conference "Semiconductor Lasers and LEDs" San Jose, CA, January 21 – 24 (January 2008)
- Member, Program Committee, Light-emitting diodes: Research, Manufacturing, and Applications, SPIE Photonics West 2008, San Jose, California, January 19 – 24 (January 2008)
- Program Committee Member of the 7th International Symposium on Semiconductor Light Emitting Devices (ISSLED-2008) held in Phoenix, Arizona (USA), April 27 – May 2 (April 2008)
- Member, Program Committee, China SSL 2008, Shenzhen Convention & Exhibition Center, China, July 24 – 26 (July 2008)
- Member, Program Committee, International Workshop on Nitride Semiconductors, IWN 2008, Montreux, Switzerland, October 6 – 10 (October 2008)
- Opto Track Chair of *SPIE Photonics West* conference "Semiconductor Lasers and LEDs" San Jose, CA, January 25 – 29 (January 2009)
- Guest Editor of Special Issue on *Solid-State Lighting* published in the *IEEE Journal of Selected Topic in Quantum Electronics*, July / August edition (August 2009)
- Honorable Conference Chair, 6th China International Forum on Solid-State Lighting (China SSL), Shenzhen Convention & Exhibition Center, China, October 14 – 16 (October 2009)
- Program Committee Member, International Conference on Nitride Semiconductors (ICNS), Jeju, South Korea, October 18 – 23 (October 2009)
- Program Committee Member, The Second International Conference on White LEDs and Solid-State Lighting, Taipei, Taiwan, December 13 – 16 (December 2009)
- Editor, *Compound Semiconductors and Energy Applications and Environmental Sustainability*, Materials Research Society (MRS) Symposium Proceedings Volume 1167 (MRS, Warrendale PA, 2009)
- Conference Chair, OPTO, *SPIE Photonics West 2010*, San Francisco, California, January 23 – 27 (January 2010)
- Guest Editor of Special Issue on *Light-Emitting Diodes* published in the *IEEE Transactions on Electron Devices* (January 2010)
- Program Committee Member, *8th International Symposium on Semiconductor Light Emitting Devices* (ISSLED), Beijing, China, May 16 – 21 (May 2010)
- International Advisory Committee Member of the 16th *Microoptics Conference* (MOC'10) held in Hsinchu, Taiwan, sponsored and endorsed by OSA and IEEE/Photonics Society and organized by National Chiao Tung University, Oct. 31 to Nov. 3 (October 2010)
- Member of Academic Committee of *China Solid-State Lighting Conference* (CHINA SSL 2010) Shenzhen, China, October 14 – 16 (October 2010)
- Conference Co-Chair, OPTO, *SPIE Photonics West 2011*, San Francisco, California, January 22 – 27 (January 2011)
- Executive Organizing Committee OPTO, *SPIE Photonics West 2011*, San Francisco, California, January 22 – 27 (January 2011)
- Program Committee Member of conference entitled: "Light-Emitting Diodes: Materials, Devices, and Applications for Solid-State Lighting XV *SPIE Photonics West 2011*, San Francisco, California, January 22 – 27 (January 2011)
- Member of CLEO Subcommittee 15, entitled "LEDs, Photovoltaics and Energy-Efficient ("Green") Photonics" for the 2011 Conference on Lasers and Electro-Optics (CLEO), Baltimore, Maryland May 1 – 6 (May 2011)
- Member of the Academic Committee of the 8th China International Forum on Solid-State Lighting (CHINA-SSL-2011) Guangzhou November 8 – 10 (November 2011)
- Program Committee Member of conference entitled: "Light-Emitting Diodes: Materials, Devices, and Applications for Solid-State Lighting XV *SPIE Photonics West 2012*, San Francisco, California, January 21 – 26 (January 2012)
- Member of CLEO Subcommittee 15, entitled "LEDs, Photovoltaics and Energy-Efficient ("Green") Photonics" for the 2012 Conference on Lasers and Electro-Optics (CLEO), San Jose, California, May 6 – 11 (May 2012)
- Member of Academic Committee of the 9th China International Forum on Solid-State Lighting (CHINA SSL 2012), Guangzhou, China, November 5 – 7, 2012 (November 2012)
- Program Committee Member of conference entitled: "Light-Emitting Diodes: Materials, Devices, and Applications for Solid-State Lighting XVI *SPIE Photonics West 2013*, San Francisco, California, 2 – 7 February 2013 (February 2013)
- Member of CLEO Subcommittee in the topic area: "Science & Innovation 15: LEDS, Photovoltaics and Energy-Efficient ("Green") Photonics" for the CLEO 2013 conference, April 28 – May 3, 2013 in Baltimore, Maryland (May 2013)
- Member, International Advisory Committee of the International Conference on Advanced Electromaterials (ICAE 2013) held on Jeju Island, Korea, from November 12 – 15, 2013 (November 2013)

Pictiva EX2016
Samsung v Pictiva
IPR2024-01095

- Program Committee Member, *Solid-State and Organic Lighting* (*SOLED*), OSA Topical Meeting, 3 – 7 November 2013, Marriott Tucson Star Pass, Tucson, Arizona, USA (November 2013)
- Co-Chair, OPTIC International Conference, Chung Li, Taiwan, National Central University, December 5 – 7, 2013 (December 2013)
- Program Committee Member of conference entitled: "Light-Emitting Diodes: Materials, Devices, and Applications for Solid-State Lighting XVII" *SPIE Photonics West* 2013, San Francisco, California, 1 – 8 February (2014)
- Publication Committee Member, *5th International Conference on White LEDs and Solid-State Lighting* (White LEDs), Jeju Island, Korea, May 25 – 28, 2014 (May 2014)
- Sub-Committee Chair of Track 6: Displays, Solid-State Lighting, Photovoltaics, and Energy-Efficient Photonics of *Asia Communications and Photonics Conference 2014* (ACP 2014). ACP is the largest and the most influential conference in Asia and Pacific Rim for communications and photonics technologies. ACP 2014, Shanghai International Convention Center, Shanghai, China, November 11 – 14 (2014)
- International Consultant of technical seminar of the 11th China International Forum on Solid-State Lighting (SSL-China 2014) Guangzhou, China, November 6 – 8 (2014)
- Member of the International Advisory Committee of the 11th International Symposium on Semiconductor Light Emitting Devices (ISSLED 2017) held in Banff, Canada on October 8 – 13 (2017)
- Assisting the US Judicial Government Branch (various US District Courts), the USPTO (US Patent and Trademark Office) and the ITC (International Trade Commission) by serving as an independent Technical Expert Witness (1997 to present)

Books

- ***Doping in III-V semiconductors*** (author) Hardback and paperback, 628 pages (Cambridge University Press, Cambridge, UK, 1993). The following excerpt is from a book review by D. L. Miller, *University of Pennsylvania*, University Park PA, which appeared in *Physics Today*, Oct. 1994, p. 71: "[...] Fred Schubert has written a book that very nicely fills two roles: It serves as a reference volume for those of us who use III-V materials, and it provides enlightening explanations of interesting and important problems in semiconductor physics. [...] Schubert, who is employed by AT&T Bell Laboratories, brings his extensive research involvement with III-V materials physics straight to this book. His lucid explanations of some of the important physics of doped semiconductors is a major strength. For example, the chapter on deep centers provides the clearest treatment of the DX center I can remember reading, and it uses the large lattice distortion model and configurational coordinates introduced for the DX center to describe the EL2 deep level. This book can also serve as an excellent reference volume, because it briefly describes epitaxial growth techniques and the doping methods used with them, catalogs dopant-related phenomena, describes characterization techniques and provides 45 pages of citations to published articles and books. [...] I will use it to help my graduate students in the physics of semiconductors. [...] It will certainly be available on my bookshelf, in part to remind me what the Burstein-Moss shift is and in part for the literally hundreds of references that it provides on nearly every topic related to III-V semiconductor doping. Because of its clarity in treating some interesting phenomena of modern semiconductor physics, you too might want to get a copy of this book, even if you believe that Ga and As are just poor alternatives for doping silicon"
- ***Delta doping in semiconductors*** (editor) Hardback and paperback, 616 pages (Cambridge University Press, Cambridge, U. K., 1996)
- ***Light-emitting diodes*** (author) Hardback and paperback, 328 pages (Cambridge University Press, Cambridge, UK, 2003). The following excerpt is from a book review by David Bour, *Agilent Laboratories*, Palo Alto CA, which appeared in *Physics Today*, Nov. 2004, p. 66: "[...] In "*Light-emitting diodes*", E. Fred Schubert provides an excellent review of the physics and technology of semiconductor LEDs. […] Interesting anecdotes like [the first demonstration of electroluminescence], clearly written by someone with a broad perspective and expertise, appear throughout the book, making it enjoyable to read. […] Schubert provides an excellent description of the undesirable [non-radiative] recombination pathway. […] Schubert has made pioneering contributions to those devices, and this variety of LEDs may become more widely used in the future. […] Overall, "*Light-emitting diodes*" is an excellent examination of the physics and technology of semiconductor LEDs. The narration is simple and direct, and the book is well referenced for those seeking a deeper understanding of the topic. Written for the graduate level, the text will appeal to a broad audience; and for specialists who make semiconductor LEDs and laser diodes, it will serve as a useful connection to the scientific literature."
- ***Light-emitting diodes, second edition*** (author) Hardback, 422 pages (Cambridge University Press, Cambridge, UK, 2006)
- ***Physical Foundations of Solid-State Devices*** (author) eBook, 275 pages, ISBN-13: 978-0-9863826-2-8 (Google Books, Mountain View CA, 2015)

Pictiva EX2016
Samsung v Pictiva
IPR2024-01095

- ***Light-emitting diodes, 3rd edition*** (author) eBook, 672 pages with hundreds of colored illustrations, ISBN: 978-0-9 863826-6-6 (Google Books, Mountain View CA, 2018) "The 1st edition of the book "Light-Emitting Diodes" was published in 2003. The 2nd edition was published in 2006. The current 3rd edition of the book is a substantial expansion of the second edition and has 37 chapters. The book includes a thorough discussion of white light-emitting diodes (LEDs), phosphor materials used in white LEDs, packaging technology, and the various efficiencies and efficacies encountered in the context of LEDs. The background of light, color science, and human vision is provided as well. The fully colored illustrations of the 3rd edition are undoubtedly beneficial given the prominent role of light and color in the field of LEDs. The book is a comprehensive discussion of the LED, particularly its semiconductor physics, electrical, optical, material science, thermal, mechanical, and chemical foundations. The 3rd edition is published in electronic format in order to make the book affordable and easily accessible to a wide readership."

Courses and laboratories developed at Boston University

- Developed first laboratory for "Physics of semiconductor devices" (SC-471) Fall (1998)
- Developed course "Quantum mechanics applied to semiconductor devices" (SC-574) Fall (1999)
- Developed course "Semiconductor light emitters" (SC-760) Fall (2000)
- Developed distance-learning course and NTU course on "Light-emitting diodes – Device physics and applications" Fall (2000)

Courses taught at Boston University

- Undergraduate Course "Physics of semiconductor devices" (SC-471)
- Graduate course "Fiber optic communication systems" (SC-563)
- Graduate course "Quantum mechanics applied to semiconductor devices" (SC-574)
- Graduate course "Introduction to solid-state physics of devices" (SC-577)
- Graduate course "Quantum electronics" (SC-700)
- Graduate course "Integrated optoelectronics" (SC-770)
- Graduate course "Compound semiconductor devices" (SC-771)
- Graduate course "Light-emitting diodes" (SC-760)
- Graduate course "Research seminar" (SC-860, SC-892)
- Other courses "Research", "Guided Study", "Master Thesis", and "Dissertation" (SC-900)

Courses taught at Rensselaer Polytechnic Institute

- Graduate Course "Semiconductor devices and models II" (ECSE-6290)
- Undergraduate course "Microelectronics technology" (ECSE-2210)
- Undergraduate course "Fields and Waves 1" (ECSE-2100)
- Graduate course "Quantum mechanics applied to semiconductor devices" (ECSE-6968)
- Graduate course "Physical foundations of solid-state devices" (SC-6960)
- Graduate course "Light-emitting diodes and solid-state lighting" (SC-6961)
- Undergraduate course "Introduction to Electronics" (ECSE-2050)
- Other courses "Research", "Guided Study", "Master Thesis", and "Dissertation"

Teaching evaluations and students' comments

1997 – Students made the following comments: "Clear … organized … excellent explanations … I've never had a professor like him – I wish all were like him … very clear and concise presentations … strong response to students' questions and concerns … Professor provided excellent notes … laid out lectures in a clear and precise manner which worked out wonderfully … well organized and confident … responsive to students' concerns … excellent for students going into the semiconductor industry … excellent hand-outs and course materials … well prepared … clear lectures … I was strongly encouraged … materials are very interesting … hand-outs were excellent … material is very important … the presentation of materials was very clear … hand-outs were excellent support to the class … efforts made by Prof. Schubert in keeping everyone at the same pace was remarkable …"

1998 – Students made the following comments: "Professor was always well prepared … excellent content … very relevant for the field of solid-state devices … excellent preparation for the class … handouts were very good … very well-organized teacher … excellent knowledge of material … provided a complete background of all material … easy to talk to … excellent overall teaching skills … really enjoyed coming to class … his choice of topics and homework helped me a lot … enthusiastic in teaching and helpful during the office hours … one of the best professors I have had at BU … course gave a very good overview of the different solid-state physics principles … the course was very well organized … relevant examples and homework were given … good explanations were

Pictiva EX2016
Samsung v Pictiva
IPR2024-01095

given … presented clearly … presentation was clear … communicated effectively … very knowledgeable … good demonstrations in class … gives clear descriptions … asks questions of class … grades homework fairly … good at answering questions … no weak points … excellent instructor and scientist … inspiring professor … thorough … the instructor is very precise and well prepared … his knowledge of the material is exact … very responsive to feedback … encourages student questions, class participation and discussion … the instructor cared about whether students understood material … the instructor used applications immediately after showing theory … handouts were excellent … guest lecture and lab tour excellent idea … excellent class notes … presented topics neatly … well prepared … review of ongoing research topics was great … Professor Schubert is undoubtedly an expert in his area …"

1999 – Students made the following comments: "He enjoyed teaching the material and was very clear … the presentation of the material in class was excellent … he helped me to understand a lot about semiconductors … Prof. Schubert always tried to make sure that we would all have a clear understanding of the material … manuscripts were very helpful … encouraged lots of class participation and was always readily available for help … presentation was excellent … the instructor was always willing to help me … very helpful … Clearly, Prof. Schubert is *more* than just extremely knowledgeable about this material … very thorough and exact communication of points … excellent course packet written by the instructor … he was very well prepared for class … He is extremely fair and encourages participation … he is also very accessible … excellent instructor … very approachable and easy to ask questions of … handouts were very effective and helpful … Prof. Schubert is very prepared and concepts are well explained … materials will be very useful for my future … very open to questions"

2000 – Students made the following comments: "He did a lot of experiments which really helped … the material is very interesting and cutting edge … clear presentations … good in-class demonstrations … very clear lectures … the material really does challenge you … takes the time to answer your questions … very interesting material … relevant to today's world of communication … the field trip was fun … in-class demonstrations really added to class … good understanding of course material … excellent details, willing to help, good explanations … in-depth details on quantum mechanics … the instructor was extremely accessible to students … he encouraged participation in class … he gave intuitive arguments and explained concepts in a very physical way … I very much enjoyed Professor Schubert and would like to take more classes with him … material was very beautiful … I *very much* enjoyed the papers that were discussed … everything is well organized … hand-out material is very complete and clear … lectures are clear … the professor prepared an excellent manuscript … explained things very clearly … he has strong enthusiasm to solve students' questions … it's a very important course … Professor follows the course notes exactly, so one can concentrate on material without having to focus on details … clearly presented material … the course is great preparation for future courses in solid-state physics … I greatly admire Professor Schubert …"

2001 – Students made the following comments: "He has a thorough understanding of the subject … I like the fact that he shows us examples in class demonstrations … the manuscript was good … instructor provides good notes … materials are presented clearly … in this course you learn a lot … very illustrative and in depth … very interesting course … Professor presented the material well … Professor seemed to have a strong grasp on what he was teaching … the basics were presented correctly … smooth transition into more complex materials … presented basics well … Professor's strong points are knowledge, organization and class materials … clear conception … very important and useful class … Professor knew what was going on … manuscript and his notes were very helpful … responded to suggestions … notes were comprehensive … just fine … manuscript was good … knows the material very well … notes handed out are good … expert knowledge of material … developed lectures logically and straightforward … lecture notes were prepared for us - very nice touch … Professor has deep knowledge of the materials … Professor is always prepared for lectures … he emphasizes principles and the concepts … good preparation … good stuff and clear presentation … good research and industry experience … excellent handout notes and materials … excellent teaching skills … inspires the interest of students … great knowledge of material … well organized course notes … Professor Schubert gave very clear instructions … listening to his presentation is a true enjoyment of an excellent art of lecture style … the manuscript has the quality of an excellent book … the manuscript was an excellent reference source book … the instructor was very clear and well organized and encouraged participation … text [written by Schubert] was extremely good … expert knowledge of materials … class demonstrations were very beneficial … can clearly relate complex ideas – very good … has a high amount of patience … excellent understanding of material … very enthusiastic in teaching … always available for discussion … very knowledgeable … I don't see any weak points … he explains the theory very clearly …"

2002 – Students made the following comments: "Always prepared … presented difficult material in a manner that was easy to understand … presented everything neatly … very helpful and organized … presents subjects in a very easy and friendly format … very well qualified … great experience … very detailed notes … well organized … very useful … very good diagrams and explanations … he knows the material extremely well … notes given to us

Pictiva EX2016
Samsung v Pictiva
IPR2024-01095

are extremely helpful … professor was very knowledgeable … was able to answer any of our questions … very informative course … very knowledgeable and a great teacher … the instructor is enthusiastic to teach students … the instructor can explain the theory very clearly …"

2003 – Students made the following comments: "Great overall knowledge … good organization skills … demonstrations were very interesting and useful … effective instructor … handouts were extremely useful and organized … good course for completely understanding many points of fiber optics …"

2004 – SPIE short course: "Encouraged questions and handled them well … excellent short course … I really appreciated and enjoyed this course … good course – covered very broad matters … the instructor was very knowledgeable on the topic … excellent! …"; RPI Semiconductor devices and models II (ECSE 6290): Overall excellence of teacher: 4.8 out of 5.0. Student comments: "course was very well prepared … [course] was very organized … this is an excellent course … I learned a lot from this course … the course was very good … thanks Prof. Schubert for a wonderful course … it's been a great course … thank you …" RPI Microelectronics Technology (ECSE 2210): Overall excellence of teacher: 4.7 (average 4.2). Overall excellence of course: 4.3 (average 3.9). Student comments: "Understandable presentation … great job [of] Prof. Schubert … very nicely done class … very helpful throughout the entire course … provided timely explanations to complicated material … very informative … course was fun and interesting … very interesting lecturer … very down to earth and easy to ask for help … [instructor] did a good job in presenting [material] … good course … fun course … excellent instructor … he is a great guy and very knowledgeable … I would definitely take a class from him again" **Book review** by Neal Oldham (San Jose, CA, USA) on "Doping in III–V semiconductors" (E. F. Schubert, Cambridge University Press, Cambridge UK, 1993) on amazon.com (May 17, 2002): "[This is the] best book I've encountered in the semiconductor field. This is, no question, the best book that I've encountered in the entire field of semiconductor physics. It is expertly organized and indexed, easy to follow, complete in its treatment of electrical and materials-science aspects of III-V semiconductor production and measurement, well-written ... worth every penny if you even have the most remote interest in the subject." **Book review** by Debdeep Jena (Santa Barbara, CA, United States) on "Doping in III–V semiconductors" (E. F. Schubert, Cambridge University Press, Cambridge UK, 1993) on amazon.com (July 6, 2001): "Very useful text for semiconductor crystal growers. Doping is a big, big issue in semiconductors; this text does appreciable justice in its treatment of the issue. In addition, Schubert treats heterostructure physics appreciably well (in fact better than many textbooks on semiconductor physics!). Perusal of this book has proved very rewarding for me, and I expect it will do the same wonder for you too."

2005 – SPIE Photonics West short course student comments: "Very good instructor! … very knowledgeable … clear on complex subjects … good job fielding questions … (numerical score 4.3 out of 5.0). Educational materials on the web: … I have greatly enjoyed your LED slideshow. CLEO short course: … very good and well-organized course!" ECSE 6968: "Class presentations were very helpful in learning … very useful in learning *the details* of fundamental concepts … the course is very good … the course is excellent for engineers … your […] treatment brought about a much better understanding … examples were great and helpful … [discussion of] history and photons […] helped increase interest … After your course now, I can actually approach a quantum mechanics text book without fear … overall, I just wanted to say – *thank you* … excellent course … the instructor made it interesting and taught very effectively … the manuscript provided was also very well written … class was excellently structured … will benefit my studies in the future … especially liked the term paper requirement … Prof. Schubert is an excellent instructor, who is well prepared …" (excellence of instructor: 4.8 out of 5.0). SPIE Photonics North short course: "Very good and clear in presentation …" (numerical score 4.4 out of 5.0). ECSE 6960 mid-course and final feedback by students: "Professor has provided all course materials … I really appreciate it … well presented … technical support was great … my learning experience has been good … responses to my homework questions have been very timely … I have enjoyed the course and found it interesting and useful … homework assignments have been extremely beneficial … the set of notes is very comprehensive … good class structure …" (numerical scores of students' course and instructor evaluation: 5.0 out of 5.0). Comment on web educational materials: "Notes look very thorough and clear …"

2006 – SPIE Photonics West short course student feedback: "Excellent, knowledgeable … excellent presentation …" (numerical score 3.91 out of 5.0). ECSE 6961 (Light-emitting diodes and solid-state lighting): "excellent … Informative, comprehensive and interesting … the best part of this course, in terms of my learning experience, has been the course materials … just an outstanding class … so much is newly discovered and so much is current on-going research and commercially relevant … Dr. Schubert is obviously a leading researcher and did a great job of conveying his experience and understanding to the class … a highly technical topic that still makes a good general conversational topic … I liked the course material … I liked the fact that Prof. Schubert lectured directly from the textbook … I liked the structure of the course … I learned a lot about lasers and LEDs and other optical devices … it is a basic and fundamental class … the instructor gives ideas, concepts, and samples very clearly … very good course … students interested in LEDs and solid-state lighting are strongly recommended to take it … liked the overall coverage … the teaching pace was good … he covered a lot of material that is

Pictiva EX2016
Samsung v Pictiva
IPR2024-01095

important for the subject, but it was clearly always related to the topic … the manuscript that he let us use was excellent in my opinion … the most important thing I liked about the course was the course material and the structure of the course … right amount of homework and the two exams and the term paper presentation … it was great to learn this course from someone who is a world leader in this field … well-organized material … liked the course format … organization was good … allowed me to know exactly what we were covering so I could look through the material prior to the lecture … course content was good, starting with LED basics and covering materials through modern technologies, and then a look at solid-state lighting and sort of an intro to communication devices … good fundamentals in LEDs … GREAT Professor … awesome course … informative course … ability to view course materials online was helpful … very fruitful course … covering a lot of materials … very good and very important for graduate students to take this one … for people in industry it's also useful … for the instructor, this course is thought through very clearly … the text book is also very good … great course … excellent instructor … cute instructor … course is very good … I benefited a lot from it …" (numerical scores: 4.7 out of 5.0). ECSE 2210 (Microelectronics Technology) student comments "Excellent teaching method … I like that the Professor asks random questions at the end of class – it helped me understand the subject better … I thought Prof. Schubert was fabulous … his organization of the class encouraged learning … I highly recommend this class to everyone … a devoted and involved teacher … displayed more enthusiasm in teaching than other Professors I had … he also seemed to have a philosophy about teaching that was beyond helping students get good grades … he emphasized real-world applications of material and had general advice about working in the real world after leaving academia … helpful … although he was harder in grading and exams, Prof. Schubert challenged us more and made the course more interesting … the many class activities provide lots of practice of materials just learned … provided good back-up information … made sure students understand concepts …thank you for asking students questions during class to reinforce concepts … thank you for allowing open book exams …" (numerical scores: excellence of teacher 4.4 out of 5.0; excellence of course 4.3 out of 5.0; overall average of ratings 4.4 out of 5.0)

2007 – Book review by Steven J. Wojtczuk (Lexington, MA, USA) on "Light-Emitting Diodes" (E.F. Schubert, Cambridge University Press, Cambridge UK, 2003) on amazon.com (March 14, 2006): "Schubert (RPI) has written an excellent book on LEDs that manages to explain and derive simple quantitative models for many phenomena of current interest … many monographs are a compendium of results in the field with hundreds of references … in contrast, Schubert, while giving copious references, is the sole author, leading to a coherent presentation well suited to learning … there are plentiful and good figures and drawings, as well as many exercises and solutions integrated into the text …" SPIE photonics West Short Course: "Excellent talk …" ECSE 2210 (Microelectronics Technology) "Thank you … great course … excellent instructor … interesting course … appreciated that you did not lecture completely from the slides and that you probed the class to ensure that we were understanding the key points … course is fine … good professor … Professor Schubert is one of the best lecturers I had … the pace at which he moves the topic, the way he explains things, and the manner in which he asks students questions all came together to help me learn much more form his lectures than I could on my own … instructors are absolutely very intelligent … Professor Schubert was a good professor … I actually learned things when Professor Schubert taught …" ECSE 6968 (Physical Foundations of Solid-State Devices) "The instructor explained every concept in a very simple and effective manner … I really enjoyed taking this course …" (numerical scores: 4.5 out of 5.0)

2008 – SPIE Photonics West short course feedback: "Very good … clear … very nice … answered questions readily …" (numerical score 4.3 out of 5.0) … ECSE 6961 (Light-emitting diodes and solid-state lighting) feedback: "It was great for me to have the opportunities to take two consecutive classes, *Physical Foundation* and *LEDs*, from you … both these classes have taught me a lot … they were very well organized … thank you for all the help … I have really enjoyed your classes … relevant material … very good professor …" (numerical scores: 4.3 out of 5.0) … Internet educational materials feedback: "I recently came across your course notes while trying to get a basic understanding about semiconductors and I wanted to thank you. Your notes for course "ECSE-2210 Microelectronics Technology" are the most useful and informative thing I have found on semiconductors on the Internet. I'm a chemist by trade and this is a great introduction for me …" 2007 Chautauqua Short Course and High School Teacher Summer Course, held at RPI June 26 and July 12, 2007 (numerical average of scores: 9 out of 10) … ECSE 6968 (Physical Foundations of Solid-State Devices) feedback: "Prof. Schubert is one of the best professors I've ever had … his ability to explain difficult and complex materials in a clear and concise manner is unmatched … the presentations, although time consuming, I felt were a great idea … thanks for your efforts professor! … I have really enjoyed taking this course …" By email: "Thank you professor … it has been a pleasure taking this course with you …" (numerical scores: 4.4 out of 5.0)

2009 – SPIE Photonics West short course feedback by students: "One of the best short courses I have taken … it was very nice to hear about the history of LEDs … very interesting but also very theoretical …" (numerical score 4.1 out of 5.0). ECSE 2210 (Microelectronics Technology) "Great course … instructors were excellent … encourages students to stay up to date with the subject matter … Thanks for this well-organized class … [the instructor] tries

Pictiva EX2016
Samsung v Pictiva
IPR2024-01095

to get students to come out with the best grade possible … this was a good class …" ECSE 6968 (Physical Foundations of Solid-State Devices) feedback by students: "It is really an excellent course … clear hand script … great professor! …" (numerical scores: 4.7 out of 5.0)

2010 – SPIE Photonics West short course feedback by students: "Good to get the latest data and charts … very good … very broad course and well organized … it was great …" (numerical score 4.04 out of 5.0) … ECSE 6961 (Light-emitting diodes and solid-state lighting) feedback by students: "A good course … this was a wonderful course … it has given me a lot of understanding … the course has inspired me to take up LED research … useful … straight forward … very good advisor … good course …" (numerical scores: 4.3 out of 5.0) … ECSE 6220 (Physical Foundations of Solid-State Devices) feedback by students: "Overall excellent course … Professor Schubert is a good teacher … he can explain every discipline very clearly and relate them to practical applications … I like his teaching style very much … overall, it was a nice course … material explained in a clear organized manner …" (numerical scores: 4.7 out of 5.0)

2011 – SPIE Photonics West short course feedback: "Very nice overview … instructor was excellent! … very good instructor … I would recommend lengthening to 6 hours … excellent presentation, materials and text … thanks … very clear and easy to follow … to be recommended … excellent presentation … good compromise for a person with a busy schedule …" (numerical score 4.45 out of 5.0); … ECSE 2210 (Microelectronics Technology) "This was a great course … I enjoyed Professor Schubert's views … I was successful … this course was taught very well … this subject I now find quite interesting and am no longer intimidated by it … I liked the material of this course … thank you …" (numerical scores: 3.3 out of 5.0); Feedback on book *Light-Emitting Diodes*: "I am a graduate student from National Chiao Tung University, Taiwan … your wonderful book *Light-Emitting Diodes*, both first- and second-edition, gave me a lot of information and help … I would like to ask when can the third of the masterpiece be published? I wish I can get it as soon as possible and study more about the lighting devices; Feedback on Internet pages: I found your website and information […] quite enlightening and provides a great start … I simply wish to quickly express my thanks and gratitude." Feedback on book *Physical Foundations of Solid-State Devices*: "Dear Prof. Schubert, I have read your book Physical Foundations of Solid-State Devices and I must say it is amazing the explanations are really good and I am most thankful that you have decided to put the book online thank you." Itamar Jade Balla, The Israel Institute Of Technology. Feedback on book *Light-Emitting Diodes* by Trung Nguyen (San Jose, California): "It is a good book about Light Emitting Diodes (LEDs). It provides very good info and it is a good reference for engineers who work in the LED field"; … ECSE 6220 (Physical Foundations of Solid-State Devices) feedback: "Amazing course … great instructor … very good course … The text and lectures were very useful and informative … I definitely learned a lot from taking this course … I liked the course materials! …" (numerical scores: 4.6 out of 5.0)

2012 – Feedback on Internet-based materials: "I'm Cheng Liu [Wuhan National Laboratory for Optoelectronics, China], currently a graduate student major in Physical Electronics … I deeply admire your profound knowledge on this field and your unselfish sharing of it …"; … SPIE Photonics West short course feedback: "Dr. Schubert was very clear and very patient with people who had questions … the materials were comprehensive …"; Feedback on Internet-based materials: "Supremely-rich course contents posted on your website. Thank you very much for showing such awesome materials for the world to see …" (Prof. Natee Tangtrakarn, Thailand) … ECSE 6962 (Light-Emitting Diodes and Solid-State Lighting) feedback: "… very interesting course … Professor Schubert did a great job explaining the material … his textbook is very clear and understandable … nice course … I learned a lot of new things by taking it …" (numerical scores: 4.7 out of 5.0)

2013 – ***SPIE Photonics West short course*** feedback (SC-052, Light-Emitting Diodes): "Great instructor with admirable combination of knowledge in academic and commercial knowledge … I appreciated the depth of his knowledge and experience … the length of the course was good … Overall this was an excellent course … Thank you … course is very easy and I understand it easily … Excellent course! … Instructor was fantastic -- clear, explicit, took questions as we went and answered well … One of the best SPIE courses I've taken (and I've taken lots)! … Great course -- thanks! … I was happy that the slides were updated with 2012 data". ***RPI course numerical scores (ECSE-6962, Light-Emitting Diodes and Solid-State Lighting)***: Numerical score of students' evaluations: 4.67 out of 5.0; Verbatim comments: "The course is pretty good … needs no improvement … I can appreciate the more wide-angle approach from the course … These areas are very important and previously I had no knowledge of them … It was a pleasure attending your class …" ***RPI course numerical scores (ECSE-6968, Physical Foundations of Solid-State Devices)***; Verbatim comments: "It has been an awesome experience of learning for me in this course … Thank you for everything … Thank you for the great semester … Have a good break … Thank you for the great semester … Have a good break … Professor, thank you for an engaging and interesting class this semester … I enjoyed the subject of my paper and learned quite a bit particularly about GaN, which I had not had a chance to really do any research into before … Very good and interactive class … I liked the style of the class … I thought the topics covered were very interesting … I think I got much more out of the class this way than if we would have followed the manuscript chapter by chapter …" Numerical score of students' evaluations: 4.83 out of 5.0

Pictiva EX2016
Samsung v Pictiva
IPR2024-01095

2014 – *SPIE Photonics West short course* verbatim feedback (SC-052, Light-Emitting Diodes): "Very knowledgeable instructor ... the course was packed with information ... handouts are excellent ... Excellent presentation and contents ... the color rendering section which was interesting and fun ..." Numerical score of students' evaluations: 4.36 out of 5.0; ***RPI Course ECSE-2210 Microelectronics Technology***; Verbatim comments: "Instructor is clearly very knowledgeable about the topics ... Very clear and comprehensive ... This is the best class ever ... I'm quite enjoying this course ... I don't really have any recommendations on things to change ... The homework and lectures being sent out at the beginning was very helpful ... Both the TA and the professor were able to explain things very well ... I think he is a good lecturer ... I think the homework each was very, very good at teaching me the material, and the exam was fairly graded and easy to understand ... I definitely like the professor and I would have him again ... A good class ... I enjoyed Prof. Schubert's style of teaching ... I would still recommend Prof. Schubert as a professor ... Microelectronics is a good class ... Prof. Schubert keeps it interesting though ... he's a great professor ... The two TAs are also great ..." Numerical score of students' evaluations of instructor: 4.25 out of 5.0. ***RPI Course ECSE-6220 Physical Foundations of Solid-State Devices***; Verbatim comments: "The book and lectures seem to be entirely in sync with one another ... it really enforces the material covered in the book ... the material is covered thoroughly and improves students' understanding of quantum physics ... The class was interesting with excellent learning materials ... I loved how the course was so well organized ... The lectures were very well put together ..." Numerical score of students' evaluations of instructor: 4.75 out of 5.0.

2015 – ***SPIE Photonics West Short Course SC-052 titled Light Emitting Diodes***, Verbatim comments: "I was very satisfied with this short course" Numerical score of students' evaluations: 4.53 out of 5.0; ***RPI Course ECSE-6960 Light-Emitting Diodes***; Verbatim comments: "the class has been excellent! ... I've learned a good amount about LEDs ... Also I'd like to thank you for a great semester and say that you've peaked my interest in the LED field! ... I would like to add that the course was an excellent experience for me and that I really enjoyed learning about LED technology! ... Thank you very much for teaching such a wonderful class ... It was a great learning course" Numerical score of students' evaluations: 5.0 out of 5.0. ***RPI Course ECSE-2100 Fields and Waves 1***; Verbatim comments: "This class is going perfectly and I love the way it's run ... The material is great and understandable ... the pace is perfect ... I like the pacing of the course and the fact that we spend time really developing an understanding of the theory and concepts that we will be using ... I like the Professor ... The lectures are great ... I really enjoy this professor and he is very understanding of the students' levels of learning and focused on that ... Professor Schubert is clear and easy to understand ... Overall a very good professor ... very knowledgeable and helpful ... I thought the professor was very knowledgeable and was an excellent instructor ..." Numerical score of students' evaluations of instructor: 4.17 out of 5.0.

2016 – ***SPIE Photonics West Short Course SC-052 titled Light Emitting Diodes***, Verbatim comments: "This has been my favorite course (over 3 years) ... Well-structured presentation, and well given ... I was surprised by how much I didn't know. I learned a lot ... Explained difficult concepts in a clear and simple manner ... Able to go "off script" to clarify during questions." Numerical score of students' evaluations: 4.56 out of 5.0; ***RPI Course ECSE-2100 Fields and Waves 1***; Verbatim comments: "This is cool material ... This class was one of the most well put together I have ever taken in terms of lecture pace, lecture clarity, TA support, and quality of teaching and communication ... The lectures never felt too long or too short, the pace was good, I never felt lost or without an option to turn for help ... The homework was neither too long nor too short, and was well balanced with conceptual and quantitative questions ... Prof. Schubert's lecture style was very clear, concise, and to the point, with many useful examples in real life scenarios which made the material more interesting ... Very well done ... Great class ... I liked the pace of the class ... it helps with understanding the material a lot ... The labs [...] were fun and very educational ... Overall, I learned a lot from this course ... The speed of the class is perfect ... I really got a chance to learn ... This professor is very good ... Also, [in] the lab section I was able to really break down what I learned in class ... Schubert has the neatest handwriting of any professor I've ever had in my 3 years here ... His diagrams are extremely neat and he is easy to understand verbally too ... Lots of conceptual knowledge covered ... Overall [...] it was an enjoyable class ..." Numerical score of students' evaluations: 5.0 out of 5.0. ***RPI Course ECSE-2210 Microelectronics Technology***; Verbatim comments: "So far, this has been one of my favorite courses at RPI … I'm a huge fan of Prof. Schubert's ability to clearly describe concepts both conceptually and mathematically … Class activities […] were really helpful! … Otherwise the class is great! … Prof Schubert knows his stuff … Best professor I have had … This course was well taught … Professor Schubert's explanations were very clear and understandable … he took time to address student questions with in-depth answers … I feel as though I gained a lot from this course, especially with regards to explanations of why certain things in ECSE-2050 (Intro to Electronics) occur the way they do like where the diode property comes from and how material properties of electronic components give rise to the very real circuit characteristics we see in ECSE-2050 labs … In this sense, Microelectronics Tech is a very good companion class to Intro to Electronics, and I highly recommend future students take them at the same time … this was a quite good class … Best MET instructor … I was so actively engaged during the lectures that it was kind of scary ... The lecture notes and lectures were mostly great … The material covered in it was succinct and interesting,

Pictiva EX2016
Samsung v Pictiva
IPR2024-01095

yet still covered the knowledge needed to tackle engineering problems in semiconductors …" Numerical score of students' evaluations: 4.64 out of 5.0.

2017 – ***RPI Course ECSE-2100 Fields and Waves 1***; Verbatim comments: "I thoroughly enjoy this class … Schubert is awesome! … Enjoyed the class … He is a good teacher … Most teachers talk really fast making it hard to follow … Schubert talks slow and explains things really well … Professor Schubert is an excellent professor, and has been one of my favorites at RPI so far … He made a difficult topic approachable, interesting and understandable … I hope I have him as a professor in the future … Thank you … I enjoyed this class, especially the labs … Lectures were good too … great class! … The professor does a great job of engaging the students by asking questions and making students ask questions to make them think about the labs … This course is overall excellent in that the professor does know the pace of class and gives feedback appropriately …"; Numerical score of students' evaluations: 4.63 out of 5.0. ***SPIE Photonics West Short Course SC-052 titled Light Emitting Diodes***, Verbatim comments: "the course covered a wide variety of concepts …" Numerical score of students' evaluations: 4.03 out of 5.0.

2018 – ***RPI Course ECSE-2100 Fields and Waves 1***; Verbatim comments: "Professor Schubert is great and very entertaining to listen to in the lab and in lecture … Really appreciate how Prof. Schubert structures lectures … Schubert is great! … The professor is excellent at relaying concepts … This course is very interesting and it goes at a good pace … One of the better professors here at RPI … He cares about his students and helps them to learn the most through lectures and labs … Fantastic course that goes into great detail into not only knowing the material but also understanding the material … [the course] has been clarified and allowed for a greater learning process." Numerical score of students' evaluations of instructor: 4.17 out of 5.0. ***RPI Course ECSE-6220 Physical Foundations of Solid-State Devices***; Verbatim comments: "Perfect professor, no complaints." Numerical score of students' evaluations (median): 5.0 out of 5.0.

2019 – ***RPI Course ECSE-2100 Fields and Waves 1***; Verbatim comments by students: "Schubert is excellent in relating information in a practical manner especially in the lab … Overall, both the professor and TAs prioritize if students understand material over semantics in reports and homework, which is really helping me in the course, and feedback given is incredibly helpful in both … Schubert is a mystery. He speaks very slowly and clearly, but you somehow learn everything at a very fast rate … Class […] being just the right amount focused and adequately paced … Overall great class … Labs were educational and we were allowed to have fun with it … Otherwise great lectures, notes were available and understandable … this was one of my favorite classes … Very well run by Schubert … lectures were informative and easy … labs were fun … The TA's were allowed to have personalities and interact with the students … 10/10 would take again … Schubert was okay … The best parts about the course for me were everything was online and I could copy the notes at my leisure with my busy schedule … I also liked that exams were open book and we had a lot of opportunities for practice … I have nothing but good things to say about both TAs and Professor Schubert – this has been my favorite class this semester … Though challenging, I have found the course material very interesting and all teachers have been excellent … Course was good … I like Professor Schubert's class notes online. They're super well written and helpful." Numerical score of students' evaluations of instructor: 4.63 out of 5.0 (average) and 5.0 out of 5.0 (median).

2019 – ***RPI Course ECSE-6280 Light Emitting Diodes***; Verbatim comments by students: "This was a great course … I learned a lot during the semester … Great class … Really enjoyed Professor Schubert's expertise on the subject … Gives both in-depth technical knowledge as well as high level background to better understand the driving factors of the LED industry … Would highly recommend it to anyone in ECSE." Numerical score of students' evaluations: 4.83 out of 5.0 (average) 5.0 out of 5.0 (median).

2020 – ***RPI Course ECSE-2100 Fields and Waves 1***; Verbatim comments by students: "I really enjoyed this class … the cool labs with good help and good lectures made me really enjoy this class and help the information stick in my head better … The labs provided a great use to show theory in practice and how certain concepts are applied to real-life applications … The laboratory session was also a great time to ask questions and have in-depth talks about the material … I would have already commended this professor for class organization and material availability prior to online courses (course material easily available, organized well, and easy to understand; interactive lectures; interactive labs better than most other ECSE courses), Prof. Schubert handled the change to online coursework best of all of my professors and maintained the quality of lecture almost perfectly … The 'live' online classes were interactive and courteous by students and the professor, organized, and just as in-depth as before, even including miniature homemade demonstrations and experiments … The course was taught very fundamentally which allowed me to think and learn more … Thank you, Professor Schubert … I really missed your live lectures and labs! … Professor Schubert made the best of the situation of online learning … Great class … I learn a lot from this class … I enjoy lab sessions and try never to miss any class … Prof. Schubert is really good!" Numerical score of students' evaluations: 4.75 out of 5.0 (average) 5.0 out of 5.0 (median).

2020 – ***RPI Course ECSE-2050 Introduction to Electronics***; Verbatim comments by students: "I really enjoyed how easy it was to follow along with the lecture … I really enjoyed the content of this course, and I feel that the

Pictiva EX2016
Samsung v Pictiva
IPR2024-01095

applications of this content in the lab were extremely effective to help students understand the content … the concepts in general were extremely interesting … I liked how the lecture sessions for this class provided much more room for discussion and examples than nearly any other ECSE course I have taken at RPI so far … Schubert was very aware of the students ability to fully comprehend the topic … He was very patient with the students that needed extra explaining … I learned a lot about the course material … I liked the one-on-one attention we received in the in-person lab … I enjoyed the in person laboratory sessions, they were a good place to get all my questions answered … I really like the lecture notes and the detailed diagrams / graphs that help explain the concepts … Professor Schubert does a great job of breaking down the material, he always tries to engage the students in every lecture … Very clear notes, responded quickly, answered any confusing questions really well, and very nice and accommodating towards the current COVID situation everyone is going through … He had very organized notes that helped especially with the difficulties of online learning … I loved the explanation of diodes, it's never been so clear to me before! … Examples were excellent … The course was great! … I learned a lot and this course stimulated my interest … Very engaging … stimulates participation … Professor Schubert was a refreshing exception … the professor was very knowledgeable in the subject area … explanations were clear and easy to understand … I really like the format of this class compared to my other classes … I really enjoyed the format … Very detailed lecture, very helpful with students, made very complex material easy to understand … Prof is really understanding and cares about his students … He is really willing to work with us which I found is really rare at RPI … He is easily one of the best professors I have had … He cares most about whether we are learning and understanding, rather than following his desired schedule perfectly … Cannot say anything bad about Prof Schubert … Class is great" Overall instructor rating: 4 out of 5. Overall course rating: 4 out of 5.

2021 – ***RPI Course ECSE-2050 Introduction to Electronics***; Verbatim comments by students: "Class has been going smoothly … Professor Schubert includes real world-examples of devices in his lectures, showing the importance of our course materials … He is always very considerate of students, trying to adapt to what would help people most … He engages students in lectures." Overall instructor rating: 4.8 out of 5.0. Overall course rating: 4.6 out of 5.0.

2021 – ***RPI Course ECSE-2050 Introduction to Electronics***; Verbatim comments by students: "Professor is always able to conceptually answer our questions, and run through circuit analysis with us if the results we're measuring don't match up … I tried taking this class once before, and I failed it. This time around, I feel like I know everything about everything. I had never imagined just what a difference teaching style could make in my ability to learn information, but this class is so much more welcoming to me this time around. It was with a different professor the first time. I much prefer Professor Schubert and the way he conveys information so effortlessly. He also seems like he's passionate about teaching the information and his handwritten notes are astonishingly detailed … Great professor! I appreciate Professor Schubert taking the time to clarify different topics and always checking in with the students. He seems to genuinely care about our education. He is strict about deadlines, more so than other professors at least, but I think he has earned that … Professor Schubert is very friendly to his students … He was very helpful and one of the few professors who actually stays and talks to students all throughout the lab period. It was very helpful because often I would think that I fully understood a concept and then he would ask a question that would either stump me or reinforce information. Additionally he kept lectures short and to-the-point, which I appreciate." Overall instructor rating: 4.3 out of 5.0. Overall course rating: 4.3 out of 5.0.

2022 – ***RPI Course ECSE-2050 Introduction to Electronics***; Verbatim comments by students: "Great professor! … Handwriting is amazing … His notes are flawless and easy to understand … This course covers much more than most other EE courses I've taken, and yet I feel as though this has been the easiest EE course due to his teaching abilities … Professor Schubert is a very knowledgeable professor … It's clear that he wants his students to learn …" Overall instructor rating: 4.3 out of 5.0. Overall course rating: 4.4 out of 5.0.

2022 – ***RPI Course ECSE-2210 Microelectronics Technology***; Verbatim comments by students: "I think Schubert does a great job of teaching … He makes the pn junctions as interesting as he can … I also love the chalk-board! So great, every professor should be forced to use it, because you can follow the work so smoothly (not like powerpoints) … I would not change the class … I also like how Prof. Schubert asks for feedback from everyone after class … Course was at a great pace and the level of difficulty … Professor Fred Schubert is one of my most favorite professors at RPI … I am sad to see in the course schedule for Spring 2023 that he is not teaching any 4000 level ECSE courses … I think that the department and students are missing out by not having someone as knowledgeable as him teaching more conceptually hard topics because Professor Schubert does that exceptionally … Best ever lecture experience, clear structure of lecture notes, comprehensive homework that helps to improve students' understandings, and always eager to solve students' questions … Thanks for another great course Professor!"

Pictiva EX2016
Samsung v Pictiva
IPR2024-01095

Post-doctoral & visiting personnel for which I served as Major Research Advisor

Dr. Li-Wei Tu	Post-Doctoral Fellow	1988–1990
Dr. Neil Hunt	Post-Doctoral Fellow	1991–1993
Dr. Matthias Passlack	Post-Doctoral Fellow	1993–1995
Dr. Wolf Grieshaber	Post-Doctoral Fellow	1995–1997
Dr. Thomas Gessmann	Post-Doctoral Fellow	2000–2002
Dr. Jong Kyu Kim	Post-Doctoral Fellow	2003–2005
Dr. Min Ho Kim, SEMCo	Visiting Engineer	2007–2008
Prof. Ji-Myon Lee, Sunchon Univ.	Visiting Professor	2007–2008
Dr. Jaehee Cho	Post-Doctoral Fellow	2008–2009
Dr. Yongjo Park, Samsung LED	Visiting Vice President	2010–2012
Dr. Yangang Andrew Xi	Visiting Scientist	2013–2014
Dr. Guan-Bo Lin	Post-Doctoral Fellow	2014–2015

Graduate students for which I served as Major Research Advisor

Dr. Dean A. Stocker	Ph.D. Dissertation	Ph. D. completed in 1999
Xiaoyun (Jane) Guo	Master Thesis	M.S.E.E. completed in 1999
John W. Graff	Master Thesis	M.S.E.E. completed in 1999
Dr. Ian D. Goepfert	Ph.D. Dissertation	Ph. D. completed in 2000
Yun-Li Li	Master Thesis	M.S.E.E. completed in 2000
Dr. Xiaoyun (Jane) Guo	Ph.D. Dissertation	Ph. D. completed in 2001
Dr. John W. Graff	Ph.D. Dissertation	Ph. D. completed in 2002
Dr. Erik L. Waldron	Ph.D. Dissertation	Ph. D. completed in 2002
Jay M. Shah	Master Thesis	M.S.E.E. completed in 2002
Dr. Yun-Li Li	Ph.D. Dissertation	Ph. D. completed in 2003
Jingqun ("JQ") Xi	Master Thesis	M.S. completed in 2003
Yangang Andrew Xi	Master Thesis	M.S. completed in 2003
Ronald Jackson	Master Thesis	M.S. completed in 2004
Sameer Chhajed	Master Thesis	M.S. completed in 2004
Hong Luo	Master Thesis	M.S. completed in 2005
Xiaolu Li	Master Thesis	M.S. completed in 2005
Kaixuan Chen	Master Thesis	M.S. completed in 2005
Dr. Jay M. Shah	Ph.D. Dissertation	Ph. D. completed in 2006
Frank Mont	Master Thesis	M.S.E.E. completed in 2006
Dr. Hong Luo	Ph.D. Dissertation	Ph. D. completed in 2006
Dr. Jingqun ("JQ") Xi	Ph.D. Dissertation	Ph. D. completed in 2006
Dr. Yangang Andrew Xi	Ph.D. Dissertation	Ph. D. completed in 2006
Won Seok Lee	Master Thesis	M.S. completed in 2007
Qi Dai	Master Thesis	M.S. completed in 2007
Di Zhu	Master Thesis	M.S. completed in 2007
Jiuru Xu	Master Thesis	M.S. completed in 2007
Ahmed Noemaun	Master Thesis	M.S. completed in 2007
Roya Mirhosseini	Master Thesis	M.S. completed in 2008
David Poxson	Master Thesis	M.S. completed in 2008
Qifeng Shan	Master Thesis	M.S. completed in 2009
Ming Ma	Master Thesis	M.S. completed in 2010
Xing Yan	Master Thesis	M.S. completed in 2010
Dr. Roya Mirhosseini	Ph.D. Dissertation	Ph. D. completed in 2010
Dr. Sameer Chhajed	Ph.D. Dissertation	Ph. D. completed in 2010
Dr. Jiuru Xu	Ph.D. Dissertation	Ph. D. completed in 2011
Dr. Frank Mont	Ph.D. Dissertation	Ph. D. completed in 2011

Pictiva EX2016
Samsung v Pictiva
IPR2024-01095

Dr. Wonseok Lee	Ph.D. Dissertation	Ph. D. completed in 2011
Dr. Di Zhu	Ph.D. Dissertation	Ph. D. completed in 2011
Dr. Qi Dai	Ph.D. Dissertation	Ph. D. completed in 2011
Dr. Ahmed Noemaun	Ph.D. Dissertation	Ph. D. completed in 2011
Dr. David Poxson	Ph.D. Dissertation	Ph. D. completed in 2011
Dr. Qifeng Shan	Ph.D. Dissertation	Ph. D. completed in 2012
Dr. Ann Mao	Ph.D. Dissertation	Ph. D. completed in 2013
Dr. Xing Yan	Ph.D. Dissertation	Ph. D. completed in 2013
Dr. Ming Ma	Ph.D. Dissertation	Ph. D. completed in 2013
Dr. David Meyaard	Ph.D. Dissertation	Ph. D. completed in 2013
Dr. Guan-Bo Lin	Ph.D. Dissertation	Ph. D. completed in 2013

Pictiva EX2016
Samsung v Pictiva
IPR2024-01095

Expert Witness Consulting Service

1997 ***Case***: Hewlett-Packard Company versus CEO of United Epitaxy Company (Taiwan)
Nature: Trade secret misappropriation
Venue: U.S. District Court.
Law firm: Morrison & Foerster LLP, Washington DC.
Role: I served as technical expert witness on behalf of United Epitaxy (Defendant). I wrote one or more expert reports.

1998 ***Case***: Hewlett-Packard Company versus United Epitaxy Company (Taiwan)
Nature: Patent infringement.
Venue: U.S. District Court for the Northern District of California.
Law firm: Quinn Emanuel Urquhart Oliver and Hedges LLP
Role: I served as technical expert witness on behalf of United Epitaxy (Defendant). I wrote one or more expert reports.

2006 ***Case***: Kerr Company versus 3M and Dentsply International Company.
Nature: Patent infringement.
Venue: U.S. District Court for the Western District of Wisconsin.
Law Firm: Woodcock Washburn LLP, Philadelphia, Pennsylvania.
Role: I served as technical expert witness on behalf of Dentsply (Defendant). I wrote one or more expert reports.

2006 ***Case***: Nichia Corporation (Japan) versus Seoul Semiconductor Company (Korea).
Nature: Design patent infringement.
Venue: U.S. District Court for Northern District of California, San Francisco Division.
Law firm: Foley & Lardner LLP Washington DC.
Role: I served as technical expert witness on behalf of Nichia (Plaintiff). I wrote one or more expert reports; I was deposed.

2008 ***Case***: Seoul Semiconductor (SSC) Company LTD (Korea) versus Nichia Corporation (Japan).
Nature: Patent infringement.
Venue: U.S. District Court for the Eastern District of Texas, Beaumont Division.
Law firm: Morrison & Foerster LLP, Palo Alto, California.
Role: I served as technical expert witness on behalf of Nichia (Defendant). I wrote one or more expert reports; I testified in District Court during the claim construction / Markman hearing.

2008 ***Case***: Professor Gertrude Rothschild versus Toshiba Company (Japan).
Nature: Patent infringement.
Venue: U.S. International Trade Commission (ITC), Washington DC.
Law firm: DLA Piper LLP, San Francisco California.
Role: I served as technical expert witness on behalf of Toshiba (Defendant). I wrote one or more expert reports; I was deposed.

2008 ***Case***: Honeywell Company versus Cree Company and Lumileds Company.
Nature: Patent infringement and Reexamination of patent.
Venue: U.S. District Court for the Eastern District of Texas, Marshall Division. Reexamination before the USPTO's Patent Trial and Appeal Board.
Law firms: Paul Hastings LLP, Washington DC and Ingrassia, Fisher & Lorenz PC, Washington DC.
Role: I served as technical expert witness on behalf of Honeywell (Plaintiff). I wrote one or more expert reports. I testified at the USPTO during a re-examination hearing.

Pictiva EX2016
Samsung v Pictiva
IPR2024-01095

2010 ***Case***: Landmark Screens Company versus MLB Company and Kohler.
Nature: Mishandling of a patent application.
Venue: U.S. District Court for the Northern District of California, San Jose Division.
Law firm: Keker & Van Nest LLP, San Francisco, California.
Role: I served as technical expert witness on behalf of MLB and Kohler (Defendant). Negligence in conjunction with a patent application; I wrote one or more expert reports.

2011 ***Case***: Koninklijke Philips Electronics N.V. versus Seoul Semiconductor (SSC) Company LTD.
Nature: Patent infringement.
Venue: U.S. District Court for the Central District of California Southern Division
Law firm: Latham & Watkins LLP, Washington DC.
Role: I served as technical expert witness on behalf of SSC (Defendant). I wrote one or more expert reports.

2011 ***Case***: Jeou-Nan Tseng versus Home Depot USA Inc. and Guangde LEDup Enterprise Inc.
Nature: Patent infringement.
Venue: U.S. District Court for the Western District of Washington at Seattle.
Law firm: DLA Piper, Philadelphia, Pennsylvania.
Role: I served as technical expert witness on behalf of Home Depot (Defendant). I wrote one or more expert reports.

2011 ***Case***: Lightpanels Ltd. Company versus Fuzhou F&V Photographic Company.
Nature: Patent infringement.
Venue: U.S. International Trade Commission (ITC), Washington DC.
Law firm: Locke Lord LLP, New York, New York.
Role: I served as technical expert witness on behalf of Fuzhou F&V and Nanguang Photographic (Defendant). I wrote one or more expert reports; I was deposed.

2012 ***Case***: Osram Company versus LG Company.
Nature: Patent infringement.
Venue: U.S. International Trade Commission (ITC), Washington DC.
Law firm: Finnegan, Henderson, Farabow, Garrett & Dunner, LLP, Washington DC.
Role: I served as technical expert witness on behalf of LG (Defendant). I wrote one or more expert reports; I was deposed; I testified at the ITC Hearing.

2012 ***Case***: Osram Company versus LG Company and Samsung Company.
Nature: Patent infringement.
Venue: U.S. International Trade Commission (ITC), Washington DC.
Law firm: Covington & Burling LLP, Washington DC.
Role: I served as technical expert witness on behalf of LG and Samsung (Defendant). I wrote one or more expert reports; I was deposed; I testified at the ITC Hearing.

2013 ***Case***: Chao Tai Electron Co. LTD. versus LEDup Enterprise Inc. and others.
Nature: Patent infringement.
Venue: U.S. District Court for the Central District of California.
Law firm: Hunton & Williams LLP, Washington DC.
Role: I served as technical expert witness on behalf of LEDup Enterprise Inc. and others (Defendants). I wrote one or more expert reports.

2013 ***Case***: Nichia Corporation versus Everlight Company and Emcore Company.
Nature: Inter Partes Review (IPR).
Venue: USPTO Patent Trial and Appeal Board.

Pictiva EX2016
Samsung v Pictiva
IPR2024-01095

Law firm: Foley & Lardner LLP, Washington DC.
Role: I served as technical expert witness on behalf of Nichia Corporation (Petitioner). I wrote one or more expert reports; I was deposed.

2014 ***Case***: Everlight Electronics Co. LTD. versus Nichia Corporation.
Nature: Patent infringement.
Venue: U.S. District Court for the Eastern District of Michigan, Southern Division.
Law firm: Foley & Lardner LLP, Washington DC.
Role: I served as technical expert witness on behalf of Nichia Corporation (Defendant). I wrote one or more expert reports; I was deposed; I testified at Phase 1 of trial (jury trial) and I testified at Phase 2 of trial (bench trial).

2014 ***Case***: LEDup Company versus Nicolas Holiday Company.
Nature: Patent infringement.
Venue: U.S. District Court for the Central District of California.
Law firm: Pendleton, Wilson, Hennessey, and Crow PC, Denver, Colorado.
Role: I served as technical expert witness on behalf of LEDup (Plaintiff). I wrote one or more expert reports.

2014 ***Case***: Nichia Corporation versus Everlight Electronics Co. LTD.
Nature: Patent infringement.
Venue: U.S. District Court for the Eastern District of Texas, Marshall Division.
Case number: 02:13-cv-702-JRG (E.D. Texas).
Law firm: Rothwell, Figg, Ernst & Manbeck PC, Washington DC.
Role: I served as technical expert witness on behalf of Nichia (Plaintiff). I wrote one or more expert reports; I was deposed; I testified at trial (bench trial).

2015 ***Case***: Cree Company versus Unity Opto, Unity Microelectronics, and Feit Electric Company
Nature: Patent infringement.
Venue: U.S. International Trade Commission (ITC), Washington DC.
Law firm: Alston & Bird LLP, Silicon Valley, East Palo Alto, California.
Role: I served as expert witness on behalf of Unity Opto Technology *et al*. (Defendants). I wrote one or more expert reports; I was deposed; I testified at trial (ITC Hearing).

2015 ***Case***: Honeywell International Inc. versus Cree Inc.
Nature: Inter Partes Review (IPR).
Venue: USPTO Patent Trial and Appeal Board.
Law firm: Arnold & Porter LLP, San Francisco, California.
Role: I served as expert witness on behalf of Honeywell International Inc. (Plaintiff). I wrote one or more expert reports.

2015 ***Case***: Honeywell International Inc. versus Cree Inc.
Nature: Patent infringement.
Venue: U.S. District Court for the District of New Jersey.
Law firm: Arnold & Porter LLP, San Francisco, California.
Role: I served as expert witness on behalf of Honeywell International Inc. (Plaintiff).

2015 ***Case***: Cree Inc. versus Kingbright Electronic Co. LTD and SunLED Corporation.
Nature: Patent infringement.
Venue: U.S. District Court for the Western District of Wisconsin.
Law firm: Hansen Reynolds Dickinson Crueger LLC, Milwaukee, Wisconsin.
Role: I served as technical expert witness on behalf of Kingbright and SunLED (Defendants). I wrote one or more expert reports; I was deposed.

Pictiva EX2016
Samsung v Pictiva
IPR2024-01095

2016 ***Case***: Acuity Brands Lighting Inc. versus Lynk Labs Inc.
Nature: Inter Partes Review (IPR).
Venue: USPTO Patent Trial and Appeal Board.
Law firm: Haynes Boone LLP, Chicago, Illinois.
Role: I served as technical expert witness on behalf of Lynk Labs (Plaintiff). I wrote one or more expert reports.

2016 ***Case***: Godo Kaisha IP Bridge 1 Company versus Broadcom Company and others.
Nature: Patent infringement.
Venue: U.S. District Court for the Eastern District of Texas, Marshall Division.
Law firm: Ropes and Gray LLP, New York City, New York.
Role: I served as technical expert witness on behalf of IP Bridge 1 (Plaintiff). I wrote one or more expert reports; I was deposed.

2016 ***Case***: TSMC Company versus Godo Kaisha IP Bridge 1 Company.
Nature: Inter Partes Review (IPR).
Venue: USPTO Patent Trial and Appeal Board.
Law firm: Greenblum & Bernstein, P.L.C., Reston, Virginia.
Role: I served as technical expert witness on behalf of IP Bridge (Patent Owner). I wrote one or more expert reports; I was deposed.

2017 ***Case***: Harvard University versus Micron Technology Company.
Nature: Patent infringement.
Venue: U.S. District Court for MA, Boston; U.S. District Court for Delaware, Wilmington.
Law firm: Weil Gotshal & Manges LLP, Redwood Shores, California.
Role: I served as technical expert witness on behalf of Micron Technology Company (Defendant). I wrote one or more expert reports; I was deposed.

2017 ***Case***: Seoul Viosys Company versus P3 Company.
Nature: Patent infringement.
Venue: U.S. District Court, Southern District of New York, New York City.
Law firm: Holland & Knight LLP, New York City, New York.
Role: I served as technical expert witness on behalf of Seoul Viosys (Plaintiff). I wrote one or more expert reports.

2017 ***Case***: Nitride Semiconductor Company versus Rayvio Company.
Nature: Patent infringement.
Venue: US District Court for the Northern District of California.
Law firm: Dentons LLP, Palo Alto, California.
Role: I served as technical expert witness on behalf of Rayvio (Defendant).

2018 ***Case***: CRX Tech LLC versus Samsung Electronics Co. LTD.
Nature: Patent infringement.
Venue: U.S. District Court for the Eastern District of Texas, Marshall Division.
Law firm: Arnold & Porter LLP, Los Angeles, California.
Role: I served as technical expert witness on behalf of Samsung (Defendant).

2018 ***Case***: Macom Technology Solutions Holdings Inc. versus Infineon Technologies AG.
Nature: Patent infringement.
Venue: U.S. District Court Central District of California Western Division, Los Angeles.
Law firm: Perkins Coie LLP, Denver, Colorado.

Pictiva EX2016
Samsung v Pictiva
IPR2024-01095

Role: I served as technical expert witness on behalf of Macom (Plaintiff). I wrote one or more expert reports; I was deposed.

2018 ***Case***: Vizio Inc. versus Nichia Corporation.
Nature: Inter Partes Review (IPR).
Venue: USPTO Patent Trial and Appeal Board.
Case number: Case No. IPR-2017-01608 and IPR-2017-01623 (PTAB).
Law firm: Rothwell, Figg, Ernst & Manbeck, P.C., Washington DC.
Role: I served as technical expert witness on behalf of Nichia Corporation (Patent Owner). I wrote one or more expert declarations.

2018 ***Case***: Lowe's Companies Inc. versus Nichia Corporation.
Nature: Inter Partes Review (IPR).
Venue: USPTO Patent Trial and Appeal Board.
Case number: Case No. IPR2017-02014 (PTAB).
Law firm: Rothwell, Figg, Ernst & Manbeck, P.C., Washington DC.
Role: I served as technical expert witness on behalf of Nichia Corporation (Patent Owner). I wrote one or more expert declarations.

2018 ***Case***: Ultravision Technologies LLC versus Prismaflex USA Inc.
Nature: Patent infringement.
Venue: US International Trade Commission (ITC), Washington DC.
Case number: Investigation No. 337-TA-1114 (ITC)
Law firm: Womble Bond Dickinson LLP, Winston-Salem, NC
Role: I served as technical expert witness on behalf of Prismaflex USA (Defendant). I wrote one or more expert reports. I was deposed.

2019 ***Case***: Carl Zeiss AG versus Nikon USA Inc.
Nature: Patent infringement.
Venue: US International Trade Commission (ITC), Washington DC.
Case number: Investigation No. 337-TA-1129 (US ITC)
Law firm: Morrison & Foerster LLP, Los Angeles CA.
Role: I served as technical expert witness on behalf of Nikon USA (Defendant). I wrote one or more expert reports. I was deposed.

2019 ***Case***: ASM IP Holding B.V. versus Hitachi Kokusai Electric Inc.
Nature: Arbitration related to IP licensing dispute.
Venue: ICDR (International Center for Dispute Resolution), Palo Alto CA.
Case number: Case No. ICDR 01-17-0005-1963 (Palo Alto CA)
Law firm: Quinn Emanuel Urquhart & Sullivan LLP, San Francisco CA.
Role: I served as technical expert witness on behalf of ASM IP Holding B.V. (Complainant). I authored multiple witness statements. I testified at the Arbitration Hearing.

2019 ***Case***: Power Integrations Inc. versus C. W. Park.
Nature: Breach of employment contract.
Venue: US District Court, Northern District of California, San Jose Division.
Case number: 5:16-cv-02366-BLF (Northern District of California)
Law firm: Miclean Gleason LLP, San Mateo CA.
Role: I served as technical expert witness on behalf of Power Integrations Inc. (Complainant). I performed analyses relating to switched-mode power supplies (SMPS) including flyback transformers. The matter ended in settlement.

Pictiva EX2016
Samsung v Pictiva
IPR2024-01095

2019 ***Case***: Omni MedSci Inc. versus Apple Inc.
Nature: Patent infringement.
Venue: US District Court, Eastern District of Texas, Marshall Division.
Case number: Civil Action No. 2:18-cv-134-RWS (E.D. Texas)
Law firm: Sidley Austin LLP, Washington DC.
Role: I served as technical expert witness on behalf of Apple Inc. (Defendant). I performed a non-infringement analysis relating to the heart rate monitor of the Apple Watch, authored an expert report, and testified at a deposition.

2019 ***Case***: Fluxwerx Illumination Inc., versus OKT Lighting USA LLC
Nature: Design patent infringement.
Venue: US District Court, Southern District of Texas, Houston Division.
Case number: Civil Action No. 4:19-CV-01113 (S.D. Texas)
Law firm: Burns & Levinson LLP, Boston MA.
Role: I served as technical expert witness on behalf of Fluxwerx Illumination, Inc. (Plaintiff). I performed an infringement analysis.

2020 ***Case***: Lighting Science Group Corporation versus Nichia Corporation and others
Nature: Patent infringement.
Venue: US ITC, Office for Unfair Import Investigations, Washington DC
Case number: Investigation No. 337-TA-1168
Law firm: Shearman & Sterling LLP, New York, NY.
Role: I served as technical expert witness on behalf of Nichia Corporation. I performed a non-infringement analysis, authored an expert report, was deposed, and testified at the ITC hearing as key technical witness on behalf of Nichia and Respondents (6 hours live testimony).

2020 ***Case***: Regents of the University of California versus Amazon, Walmart, Ikea, Target, and others
Nature: Patent infringement.
Venue: US ITC, Office for Unfair Import Investigations, Washington DC
Case number: Investigation No. 337-TA-1172
Law firm: Nixon Peabody LLP, Los Angeles CA.
Role: I served as technical expert witness on behalf of the Regents of the University of California. I performed an infringement analysis, authored an expert report, and was deposed.

2020 ***Case***: Samsung Electronics Company versus Acorn Technologies Company.
Nature: USPTO Inter Partes Review.
Venue: USPTO, Patent Trial and Appeal Board, Alexandria VA.
Case numbers: IPR-2020-01183 ('261), IPR-2020-01182 ('423), IPR-2020-01204 ('336), IPR-2020-01264 ('336), IPR-2020-01205 ('167), IPR-2020-01241 ('167), IPR-2020-01206 ('691), IPR-2020-01279 ('691), IPR-2020-01207 ('395), and IPR-2020-01282 ('395)
Law firm: Desmarais LLP, New York NY.
Role: I served as technical expert witness on behalf of Samsung Electronics Company. I authored several expert declarations and was deposed multiple times.

2020 ***Case***: Satco Company versus The Regents of the University of California.
Nature: USPTO Inter Partes Review.
Venue: USPTO, Patent Trial and Appeal Board, Alexandria VA.
Case number: IPR-2020-00579, IPR-2020-00695, IPR-2020-00780, and IPR-2020-00813.
Law firm: Nixon Peabody LLP, Los Angeles CA.
Role: I served as technical expert witness on behalf of The Regents of the University of California. I authored several expert declarations and was deposed.

Pictiva EX2016
Samsung v Pictiva
IPR2024-01095

2020 ***Case***: Godo Kaisha IP Bridge 1 Company versus Micron Technology Company.
Nature: Patent infringement.
Venue: US District Court for the Western District of Texas, Waco Division.
Case number: C.A. No. 6:20-cv-178-ADA.
Law firm: Orrick Herrington & Sutcliffe LLP, Menlo Park CA.
Role: I served as technical expert witness on behalf of Micron Technology Company. I authored multiple expert reports and was deposed.

2020 ***Case***: Nichia Company versus Healthe Company and Lighting Science Group Company.
Nature: Patent infringement.
Venue: US District Court for the Middle District of Florida, Orlando Division.
Case number: 6:19-cv-1332-RBD-EJK and 6:19-cv-1333-RBD-EJK.
Law firm: Rothwell, Figg, Ernst & Manbeck, PC, Washington DC.
Role: I served as technical expert witness on behalf of Nichia Company. I authored one or more expert reports.

2020 ***Case***: Semiconductor Energy Laboratory (SEL) Co., Ltd. versus BOE Technology Group Co., Ltd.
Nature: Patent infringement.
Venue: US District Court for the Northern District of California.
Case number: 3:20-cv-04297-EMC, N.D. Cal.
Law firm: Fish and Richardson, P.C., Redwood City CA.
Role: I served as technical expert witness on behalf of SEL.

2021 ***Case***: The University of California versus General Electric, Ikea, Home Depot and others
Nature: Patent infringement.
Venue: US ITC, Office for Unfair Import Investigations, Washington DC
Case number: Investigation No. 337-TA-1220
Law firm: Nixon Peabody LLP, Los Angeles CA.
Role: I served as technical expert witness on behalf of the University of California. I performed multiple analyses, authored several expert reports, was deposed multiple times, and testified at trial.

2021 ***Case***: Tianma Microelectronics Co., Ltd. versus Japan Display Inc. (JDI)
Nature: USPTO Inter Partes Review.
Venue: USPTO, Patent Trial and Appeal Board, Alexandria VA
Case numbers: IPR-2021-01029, IPR-2021-01057 and IPR-2021-01058
Law firm: Finnegan, Henderson, Farabow, Garrett & Dunner, LLP, Washington DC.
Role: I served as technical expert witness on behalf of Tianma. I performed multiple analyses and authored several declarations.

2021 ***Case***: Japan Display Inc. (JDI) versus Tianma Microelectronics Co., Ltd.
Nature: Patent infringement.
Venue: US District Court for the Eastern District of Texas, Marshall Division.
Case numbers: Civil Action No. 2:20-cv-00283-JRG; 2:20-cv-00284-JRG; and 2:20-cv-00285-JRG
Law firm: Finnegan, Henderson, Farabow, Garrett & Dunner, LLP, Washington DC.
Role: I served as technical expert witness on behalf of Tianma. I performed multiple analyses, authored several expert reports, and was deposed multiple times.

2022 ***Case***: Satco Products Inc. versus The Regents of the University of California.
Nature: USPTO Inter Partes Review.
Venue: USPTO, Patent Trial and Appeal Board, Alexandria VA.
Case number: IPR-2021-00662.
Law firm: Nixon Peabody LLP, Los Angeles CA.

Pictiva EX2016
Samsung v Pictiva
IPR2024-01095

Role: I served as technical expert witness on behalf of The Regents of the University of California, authored one expert declaration, and was deposed.

2022 ***Case***: Samsung Electronics Co. Ltd. versus Bishop Display Tech LLC.
Nature: USPTO Inter Partes Review.
Venue: USPTO, Patent Trial and Appeal Board, Alexandria VA.
Case numbers: IPR-2022-00500 and IPR-2022-00502.
Law firm: Baker Botts LLP, New York City NY.
Role: I served as technical expert witness on behalf of Samsung Electronics and have authored two expert declarations.

2022 ***Case***: Semiconductor Energy Laboratory (SEL) Co. Ltd. versus TCL China Star Optoelectronics Technology Co., Ltd.
Nature: Patent infringement.
Venue: US District Court for the Central District of California, Southern Division.
Case number: 8:21−cv−00554−JAK−ADS.
Law firm: Fish and Richardson, P.C., Redwood City CA.
Role: I served as technical expert witness on behalf of SEL, authored two expert reports, and was deposed.

2022 ***Case***: Nvidia Corporation versus Ocean Semiconductors LLC.
Nature: USPTO Inter Partes Review.
Venue: USPTO, Patent Trial and Appeal Board, Alexandria VA.
Case number: IPR2022-01288.
Law firm: Sheppard Mullin LLP, Menlo Park CA.
Role: I served as technical expert witness on behalf of Nvidia and authored one expert declaration.

2022 ***Case***: Nicor, Inc. versus SourceBlue LLC and InfiniLux Corporation.
Nature: Patent infringement.
Venue: US District Court for the Central District of California.
Case number: 2:21-cv-05876-AB(PDx) (C.D. Cal.).
Law firm: Loza & Loza IP LLP, Upland CA.
Role: I served as technical expert witness on behalf of Nicor, Inc., authored three expert reports, and was deposed.

2023 ***Case***: Dr. Shimon Maimon versus Lockheed Martin Corporation.
Nature: Dispute relating to a License Agreement.
Venue: JAMS ADR (Alternative Dispute Resolution).
Case number: JAMS Ref. No. 1460005932.
Law firm: Finnegan, Henderson, Farabow, Garrett & Dunner, LLP, Washington DC.
Role: I served as technical expert witness on behalf of Lockheed Martin Corporation, authored three expert reports, was deposed, and testified at the Hearing.

2023 ***Case***: Samsung Electronics Co. Ltd. versus Daedalus Prime LLC.
Nature: USPTO Inter Partes Review.
Venue: USPTO, Patent Trial and Appeal Board, Alexandria VA.
Case number: IPR2023-00536 and IPR2023-00653.
Law firm: Fish & Richardson PC, Minneapolis MN.
Role: I served as technical expert witness on behalf of Samsung Electronics and authored two expert declarations.

Pictiva EX2016
Samsung v Pictiva
IPR2024-01095

2023 ***Case***: Seoul Semiconductor Co. Ltd., et al. versus GE Healthcare Inc.
Nature: Patent infringement.
Venue: United States District Court for the District of Delaware.
Case number: Civil Action No. 1:22-cv-01455.
Law firm: Shearman & Sterling LLP, New York, NY.
Role: I served as technical expert witness on behalf of GE Healthcare.

2023 ***Case***: Efficient Power Conversion Corp. versus Innoscience (Zhuhai) Technology Company.
Nature: Patent infringement.
Venue: US International Trade Commission (ITC), Washington DC.
Case number: Investigation No. 337-TA-1366.
Law firm: Blank Rome LLP, Washington DC
Role: I served as technical expert witness on behalf of EPC, authored multiple expert reports, was deposed, and testified at the ITC Hearing.

2023 ***Case***: Xu Peicheng (Hong Kong) Optoelectronic Technol. Co. versus SemiSilicon Technol. Corp.
Nature: USPTO Inter Partes Review.
Venue: USPTO, Patent Trial and Appeal Board, Alexandria VA.
Case number: IPR2024-00156 (US Patent 8,124,988 and US 8,884,546)
Law firm: Rimon La PC, McLean VA.
Role: I served as technical expert witness on behalf of Xu Peicheng and authored two expert declarations.

2024 ***Case***: Seasonal Specialties, LLC versus LEDUP Manufacturing Group LTD.
Nature: Patent infringement.
Venue: US District Court, Central District of California, Western Division.
Case number: 2:23-cv-06318-SB-AS.
Law firm: Fairfield & Woods PC, Denver CO.
Role: I served as technical expert witness on behalf of LEDUP Manufacturing Group and composed multiple Invalidity Claim Charts.

2024 ***Case***: Wuxi Autowell Technology Co. Ltd. versus Teamtechnik Maschinen und Anlagen GmbH.
Nature: USPTO Inter Partes Review.
Venue: USPTO, Patent Trial and Appeal Board, Alexandria VA.
Case number: US patent numbers 8,247,681 and 8,253,009.
Law firm: Novick, Kim & Lee, PLLC, (NKL Law), Fairfax VA.
Role: I served as technical expert witness on behalf of Wuxi Autowell Technology and composed one expert declaration.

Pictiva EX2016
Samsung v Pictiva
IPR2024-01095

United States Patents

1. A. Fischer, Y. Horikoshi, K. Ploog, and E. F. Schubert "Semiconductor devices with at least one monoatomic layer of doping atoms" European Patent No. 0183 146 A2; US Patent No. 4,882,609; issued on November 15 (1985)
2. J. E. Cunningham, E. F. Schubert, and W. T. Tsang "Delta doped ohmic metal to semiconductor contacts" US Patent No. 4,772,934; issued on September 20 (1988)
3. J. E. Cunningham, E. F. Schubert, and W. T. Tsang "Field-effect transistor having a delta-doped ohmic contact" US Patent No. 4,780,748; issued on October 25 (1988)
4. J. E. Cunningham, E. F. Schubert, and W. T. Tsang "Method for fabricating a field-effect transistor with a self-aligned gate" US Patent No. 4,784,967; issued on November 15 (1988)
5. E. Fred Schubert "Optical communications modulator device" US Patent No. 4,929,064; filed on July 21 (1988) issued on May 29 (1990)
6. J. E. Cunningham, A. M. Glass, and E. F. Schubert "Devices having asymmetric delta-doping" US Patent No. 4,974,044; issued on November 27 (1990)
7. J. E. Cunningham, A. M. Glass, and E. F. Schubert "Devices having asymmetric delta-doping" US Patent No. 5,031,012; issued on July 9 (1991)
8. J. E. Cunningham, T. D. Harris, E. F. Schubert, and J. P. van der Ziel "Optical system including wavelength tunable semiconductor laser" US Patent No. 4,980,892; issued on December 25 (1990)
9. R. F. Kopf, J. M. Kuo, H. S. Luftman, and E. F. Schubert "Doping procedures for semiconductor devices" US Patent No. 5,024,967; issued on June 18 (1991)
10. D. G. Deppe, R. D. Dupuis, and E. F. Schubert "Vertical cavity semiconductor lasers" US Patent No. 5,018,157; issued on May 21 (1991)
11. D. G. Deppe, L. C. Feldman, R. F. Kopf, E. F. Schubert, L.-W. Tu, and G. J. Zydzik "Vertical cavity surface emitting lasers with electrically conducting mirrors" US Patent No. 5,068,868; issued on November 26 (1991)
12. D. G. Deppe, E. F. Schubert, L.-W. Tu, and G. D. Zydzik "Optical devices with electron-beam evaporated multilayer mirror" US Patent No. 5,206,871; issued on April 27 (1993)
13. R. F. Kopf, E. F. Schubert, H. O'Brian, L.-W. Tu, Y. H. Wang, and G. J. Zydzik "Vertical cavity surface emitting lasers with transparent electrodes" US Patent No. 5,115,441; issued on May 19 (1992)
14. E. F. Schubert, L.-W. Tu, and G. J. Zydzik "Elimination of heterojunction band discontinuities" US Patent No. 5,170,407; issued on December 8 (1992)
15. S. W. Downey, A. B. Emerson, R. F. Kopf, and E. F. Schubert "Devices having repetitive layers" US Patent No. 5,226,055; issued on July 6 (1993)
16. A. Y. Cho, E. F. Schubert, L.-W. Tu, and G. J. Zydzik "Resonant cavity light emitting diode" US Patent No. 5,226,053; issued on July 6 (1993)
17. L. C. Feldman, N. E. J. Hunt, D. C. Jacobson, J. M. Poate, E. F. Schubert, A. M. Vredenberg, Y. H. Wong, and G. J. Zydzik "Erbium-doped optical devices" US Patent No. 5,249,195; issued on September 28 (1993)

Pictiva EX2016
Samsung v Pictiva
IPR2024-01095

18. R. F. Kopf and E. F. Schubert "PN junction devices with group IV element-doped group III-V compound semiconductors" US Patent No. 5,268,582; issued on December 7 (1993)

19. N. E. J. Hunt and E. F. Schubert "Single mirror light-emitting diodes with enhanced intensity" US Patent No. 5,362,977; issued on November 8 (1994)

20. N. E. J. Hunt, E. F. Schubert, and G. J. Zydzik "Photodetector with a resonant cavity" US Patent No. 5,315,128; issued on May 24 (1994)

21. A. M. Glass, N. E. J. Hunt, J. M. Poate, E. F. Schubert, and G. J. Zydzik "Absorption resonant rare-earth-doped microcavities" US Patent No. 5,363,398; issued on November 8 (1994)

22. N. E. J. Hunt, M. Passlack, E. F. Schubert, and G. J. Zydzik "Electron beam deposition of gallium oxide thin films using a single high purity crystal source" US Patent No. 5,451,548; issued on September 19 (1995)

23. N. K. Dutta, R. J. Fischer, N. E. J. Hunt, M. Passlack, E. F. Schubert, and G. J. Zydzik "Gallium oxide coatings for optoelectronic devices using electron beam evaporation of a high purity single crystal $Gd_3Ga_5O_{12}$ source" US Patent No. 5,550,089; issued on August 27 (1996)

24. U. K. Chakrabarti, J. de Jong, E. F. Schubert, J. Wynn, and G. J. Zydzik "Mechanical fixture and procedure for in-vacuum coating of semiconductor laser facets" US Patent No. 5,719,077; issued on February 17 (1998)

25. E. F. Schubert "Enhanced p-type doping of wide-gap semiconductors" US Patent No. 5,932,899; issued on August 3 (1999)

26. J. D. Joannopoulos, S. Fan, P. R. Villeneuve, and E. F. Schubert "Light emitting device utilizing a periodic dielectric structure" US Patent No. 5,955,749; issued on September 21 (1999)

27. E. F. Schubert and D. A. Stocker "Crystallographic wet chemical etching on GaN" US Patent No. 6,294,475; issued on September 25 (2001)

28. E. F. Schubert "Light-emitting diode with omni-directional reflector" US Patent No. 6,784,462; issued on August 31 (2004)

29. Jaehee Cho, Hong Luo, Jong Kyu Kim, Yong Jo Park, Cheolsoo Sone, and E. Fred Schubert "Light emitting device having protection element and method of manufacturing the light emitting device" US Patent No. 7,411,221 B2; issued on August 12 (2008)

30. Jaehee Cho, Frank Wilhelm Mont, Cheolsoo Sone, Jong-kyu Kim, June-o Song, E. Fred Schubert "Optical thin film, semiconductor light emitting device having the same and methods of fabricating the same" US Patent No. 7,483,212; issued on January 27 (2009)

31. Jaehee Cho, Martin F. Schubert, E. Fred Schubert, Jong Kyu Kim, Cheolsoo Sone "Light emitting diodes and display apparatuses using the same" US Patent No. 7,560,746; issued on July 14 (2009)

32. Martin F. Schubert, Sameer Chhajed, Jong Kyu Kim, E. Fred Schubert, and Jaehee Cho "Reflector shapes for light-emitting diode-polarized light sources" US Patent No. 7,766,495; filed on June 24 (2008); issued on August 3 (2010)

33. Martin F. Schubert, Ahmed Noemaun, Sameer Chhajed, Jong Kyu Kim, E. F. Schubert, Cheolsoo Sone "Encapsulant shapes for light emitting devices lacking rotational symmetry designed to enhance extraction of light with a particular linear polarization" US Patent No. 7,819,557; filed on June 24 (2008); issued on October 6 (2010)

Pictiva EX2016
Samsung v Pictiva
IPR2024-01095

34. Jaehee Cho, Jong-Kyu Kim, Cheolsoo Sone, and E. F. Schubert "LED device having diffuse reflective surface" US Patent No. 7,816,855; filed on December 28 (2005); issued on October 19 (2010)

35. Jaehee Cho, E. Fred Schubert, and Xing Yan "Liquid crystal display with refractive index matched electrodes" US Patent No. 8,164,727; filed on April 28, 2010; issued on April 24 (2012)

36. Mary H. Crawford, Daniel Koleske, Jaehee Cho, Di Zhu, Ahmed Noemaun, Martin F. Schubert, and E. Fred Schubert "High efficiency III-Nitride light-emitting diodes" US Patent No. 8,451,877; filed on March 17, 2011; issued on May 28 (2013)

37. Min-ho Kim, Martin F. Schubert, Jong Kyu Kim, E. Fred Schubert, Yongjo Park, Cheolsoo Sone, and Sukho Yoon "Nitride semiconductor light-emitting device" US Patent No. 8,502,266; filed on September 8 (2010); issued on August 6 (2013)

38. David J. Poxson, Frank W. Mont, E. Fred Schubert, and Richard W. Siegel "Tunable nanoporous film on polymer substrates, and method for their manufacture" US Patent No. 9,732,427; filed on April 23 (2013); issued on August 15 (2017)

39. Sameer Chhajed, Jong Kyu Kim, Shawn-Yu Lin, Mei-Ling Kuo, Frank W Mont, David J Poxson, E Fred Schubert, Martin F Schubert "Ultra-low reflectance broadband omni-directional anti-reflection coating" US Patent No. 11,088,291; filed on July 22 (2016); issued on August 10 (2021)

Patent Licensing: Several patents listed above have been licensed to companies, including the Luminus Devices Company, Samsung Company, Epistar Company, Cree Company, Osram Company, and Lumileds Company.

Pictiva EX2016
Samsung v Pictiva
IPR2024-01095

Journal Publications

1982

1. H. Künzel, H. Jung, E. F. Schubert, and K. Ploog "Influence of growth conditions and of alloy composition on electrical and optical properties of MBE AlGaAs" *Journal Physique Colloque C5*, **C5/175**, 42 (1982)

1984

2. E. F. Schubert, K. Ploog, H. Dämbkes, and K. Heime "Selectively doped n-AlGaAs/ GaAs heterostructures with high-mobility two-dimensional electron gas for field-effect transistors. Part I: Effect of parallel conductance" *Applied Physics* **A33**, 63 (1984)
3. E. F. Schubert, K. Ploog, H Dämbkes., and K. Heime "Selectively doped n-AlGaAs/ GaAs heterostructures with high-mobility two-dimensional electron gas for field-effect transistors. Part II: Hot electron effects" *Applied Physics* **A33**, 183 (1984)
4. E. F. Schubert and K. Ploog "Transient photoconductivity in selectively doped n-type AlGaAs/GaAs heterostructures" *Physical Review* **B29**, 4562 (1984)
5. E. F. Schubert, E. O. Göbel, Y. Horikoshi, K. Ploog, and H. J. Queisser "Alloy broadening in photoluminescence spectra of AlGaAs" *Physical Review* **B30**, 813 (1984)
6. E. F. Schubert and K. Ploog "Shallow and deep donors in direct-gap n-AlGaAs:Si grown by molecular-beam epitaxy" *Physical Review* **B30**, 7021 (1984)

1985

7. E. F. Schubert, J. Knecht, and K. Ploog "Transient and persistent photoconductivity in n-AlGaAs and selectively doped n-AlGaAs/GaAs heterostructures*" Journal of Physics C: Solid-State Physics* **18**, L215 (1985)
8. E. F. Schubert, A. Fischer, and K. Ploog "GaAs sawtooth superlattice light-emitting diode operating monochromatically at $\lambda > 0.9$ μm" *Electronics Letters* **21**, 411 (1985)
9. E. F. Schubert, A. Fischer, Y. Horikoshi, and K. Ploog "GaAs sawtooth superlattice laser emitting at wavelengths $\lambda > 0.9$ μm" *Applied Physics Letters* **47**, 219 (1985)
10. E. F. Schubert, A. Fischer, and K. Ploog "Electron-impurity tunneling in selectively doped n-type AlGaAs/GaAs heterostructures" *Physical Review* **B31**, 7937 (1985)
11. E. F. Schubert, Y. Horikoshi, and K. Ploog "Radiative electron-hole recombination in a new sawtooth semiconductor superlattice grown by molecular-beam epitaxy" *Physical Review* **B32**, 1085 (1985)
12. E. F. Schubert and K. Ploog "The delta-doped field-effect transistor" *Japanese Journal Applied Physics Letters* **24**, L608 (1985)
13. K. Ploog, A. Fischer, E. F. Schubert "Preparation and properties of a new GaAs sawtooth doping superlattice" *Proceedings of the Second International Conference (Yamada Conference) on Modulated Semiconductor Structures*; September 9-13 (1985), Kyoto, Japan
14. E. F. Schubert and K. Ploog "Electron subband structure in selectively doped n-AlGaAs/ GaAs heterostructures*" IEEE Transactions on Electron Devices*, **ED-32**, 1868 (1985)
15. E. F. Schubert and K. Ploog "Optical properties of a new sawtooth superlattice grown by molecular beam epitaxy" *Journal de Physique* (Paris), **46**, 147 (1985)

1986

16. E. F. Schubert, A. Fischer, and K. Ploog "The delta-doped field-effect transistor" *IEEE Transactions on Electron Devices,* **ED-33**, 625 (1986)
17. E. F. Schubert and K. Ploog "Interpretation of capacitance-voltage profiles from delta-doped GaAs grown by molecular-beam epitaxy" *Japanese Journal of Applied Physics* **25**, 966 (1986)
18. E. F. Schubert and W. T. Tsang "Photoluminescence line shape of excitons in alloy semiconductors" *Physical Review B, Rapid Communications*, **B34**, 2991 (1986)
19. E. F. Schubert, J. E. Cunningham, W. T. Tsang, and T. H. Chiu "Delta-doped ohmic contacts to n-GaAs" *Applied Physics Letters* **49**, 292 (1986) and *Applied Physics Letters* **49**, 984 (1986)
20. K. Ploog, A. Fischer, and E. F. Schubert "Preparation and properties of a new GaAs sawtooth doping superlattice" *Surface Science* **174**, 120 (1986)
21. B. I. Miller, E. F. Schubert, U. Koren, A. Ourmazd, A. H. Dayem, and R. J. Capik "High quality narrow GaInAs/InP quantum wells grown by atmospheric organometallic vapor phase epitaxy" *Applied Physics Letters* **49**, 1384 (1986)
22. E. F. Schubert, Cunningham J. E., and Tsang W. T. "Self-aligned enhancement and depletion-mode GaAs field-effect transistors employing the delta-doping technique" *Applied Physics Letters* **49**, 1729 (1986)

Pictiva EX2016
Samsung v Pictiva
IPR2024-01095

23. W. T. Tsang, E. F. Schubert, A. H. Dayem, J. E. Cunningham, T. H. Chiu, J. A. Ditzenberger, J. Shah, and J. L. Zyskind "Very high quality GaInAs grown by chemical beam epitaxy" *Journal of Electronic Materials* **15**, 307 (1986)
24. W. T. Tsang and E. F. Schubert "Extremely high quality GaInAs/InP quantum wells grown by chemical beam epitaxy" *Applied Physics Letters* **49**, 220 (1986)
25. W. T. Tsang, A. H. Dayem, T. H. Chiu, J. E. Cunningham, E. F. Schubert, J. A. Ditzenberger, J. Shah, J. L. Zyskind, and N. Tabatabaie "Chemical beam epitaxial growth of extremely high quality GaInAs on InP" *Applied Physics Letters* **49**, 170 (1986)
26. E. F. Schubert, A. Fischer, and K. Ploog "Photoconductivity in selectively n- and p-doped AlGaAs/GaAs heterostructures" *Solid-State Electronics 29*, 173 (1986)

1987

27. E. F. Schubert, J. E. Cunningham, and W. T. Tsang "'Type A' sawtooth doping superlattice: realization of the Esaki-Tsu type superlattice" *Physical Review B Rapid Communications* **B36**, 1348 (1987)
28. E. F. Schubert, J. E. Cunningham, and W. T. Tsang "Electron-mobility enhancement and electron-concentration enhancement in delta-doped n-GaAs at T = 300 K" *Solid-State Communications* **63**, 591 (1987)
29. W. T. Tsang, E. F. Schubert, T. H. Chiu, J. E. Cunningham, E. G. Burkhardt, J. A. Ditzenberger, and E. Agyekum "Growth of high-quality GaInAsP by chemical beam epitaxy" *Applied Physics Letters* **51**, 761 (1987)
30. J. E. Cunningham, W. T. Tsang, T. H. Chiu, E. F. Schubert, and J. A. Ditzenberger "MBE grown high purity GaAlAs" *J. Vac. Sci. Technol*. **A5**, 761 (1987)
31. W. T. Tsang, E. F. Schubert, T. H. Chiu, J. E. Cunningham, and J. A. Ditzenberger "Chemical beam epitaxial growth of very high quality GaInAs and GaInAs/InP quantum well heterostructures" *GaAs and Related Compounds* (1987) Ed. by W. T. Lindley.
32. J. E. Cunningham, W. T. Tsang, T. H. Chiu, and E. F. Schubert "Molecular beam epitaxial growth of high purity AlGaAs" *Applied Physics Letters* **50**, 769 (1987)
33. Y. Horikoshi, A. Fischer, E. F. Schubert, and K. Ploog "High-mobility two-dimensional electron gas from delta-doped asymmetric AlGaAs/GaAs/AlGaAs quantum wells" *Japanese Journal Applied Physics* **26**, 263 (1987)
34. T. H. Chiu, E. Agyekum, J. A. Ditzenberger, A. Robertson, E. F. Schubert, W. T. Tsang, and C. W. Tu "Growth and characterization of (001) GaAs epilayers by chemical beam epitaxy" *Journal of Electronic Materials* **16**, A21 (1987)
35. E. F. Schubert, J. E. Cunningham, and W. T. Tsang "Perpendicular electronic transport in doping superlattices" *Applied Physics Letters* **51**, 817 (1987)
36. E. F. Schubert, J. E. Cunningham, W. T. Tsang, and G. L. Timp "Selectively delta-doped AlGaAs/GaAs heterostructures with two-dimensional electron-gas concentrations $n_{2DEG} \geq 1.5 \times 10^{12}$ cm^{-2} for field-effect transistors" *Applied Physics Letters* **51**, 1170 (1987)
37. T. H. Chiu, W. T. Tsang, E. F. Schubert, and E. Agyekum "Chemical beam epitaxial growth of high-purity GaAs using trimethylgallium and arsine" *Applied Physics Letters* **51**, 1109 (1987)

1988

38. B. Ullrich, E. F. Schubert, J. Stark, and J. E. Cunningham "Localization of impurities in delta-doped n-type GaAs" *Applied Physics* **A47**, 123 (1988)
39. E. F. Schubert, J. Stark, T. H. Chiu, and B. Tell "Diffusion of atomic silicon in gallium arsenide" *Applied Physics Letters* **53**, 293 (1988)
40. E. F. Schubert, J. Stark, B. Ullrich, and J. E. Cunningham "Spatial localization of impurities in delta-doped GaAs" *Applied Physics Letters* **52**, 1508 (1988)
41. J. E. Cunningham, G. Timp, E. F. Schubert, W. T. Tsang, P. G. N. DeVegvar, T. H. Chiu, and E. Agyekum "Enhancements in two-dimensional electron gas density and mobility in delta-doped AlGaAs heterostructures" *Proceedings Materials Research Society Symposium* **102** (1988)
42. T. H. Chiu, E. F. Schubert, J. E. Cunningham, and B. Tell "Diffusion studies of the Si delta-doped GaAs by capacitance-voltage measurements" *Journal of Applied Physics, Rapid Communication* **64**, 1578 (1988)
43. T. Y. Kuo, J. E. Cunningham, E. F. Schubert, W. T. Tsang, T. H. Chiu, F. Ren, and C. G. Fonstad "Selectively delta-doped quantum well transistor grown by gas source molecular beam epitaxy" *Journal of Applied Physics* **64**, 3324 (1988)
44. E. F. Schubert, B. Ullrich, T. D. Harris, and J. E. Cunningham "Quantum-confined interband absorption in GaAs sawtooth doping superlattices" *Physical Review* **B38**, 8305 (1988)

Pictiva EX2016
Samsung v Pictiva
IPR2024-01095

45. T. H. Chiu, E. F. Schubert, J. E. Cunningham, W. T. Tsang, and B. Tell "Chemical beam epitaxial growth and capacitance-voltage characterization of Si-doped GaAs" *Proceedings Materials Research Society Symposium* **102**, 475 (1988)
46. E. F. Schubert and J. E. Cunningham "Photonic switching by tunneling-assisted absorption modulation in a GaAs sawtooth structure" *Electronics Letters* **24**, 980 (1988)
47. E. F. Schubert, T. H. Chiu, J. E. Cunningham, B. Tell, and J. B. Stark "Spatial localization and diffusion of atomic silicon in delta-doped GaAs" *Journal of Electronics Materials*, **17**, 527 (1988)
48. R. J. Malik, R. Nottenburg, E. F. Schubert, J. F. Walker, and R. W. Ryan "Carbon doping in molecular beam epitaxy of GaAs from a heated graphite filament" *Applied Physics Letters* **53**, 2661 (1988)
49. E. F. Schubert, T. D. Harris, and J. E. Cunningham "Minimization of dopant-induced random potential fluctuations in sawtooth doping superlattices" *Applied Physics Letters* **53**, 2208 (1988)
50. T. Y. Kuo, J. E. Cunningham, E. F. Schubert, W. T. Tsang, T. H. Chiu, and C. G. Fonstad "Experimental and theoretical characterization of the delta-doped quantum well transistor grown by gas source molecular beam epitaxy" *IEEE Transactions on Electron Devices* **35**, 2449 (1988).

1989

51. E. F. Schubert, J. E. Cunningham, T. H. Chiu, J. B. Stark, B. Tell, and C. W. Tu "Spatial localization and diffusion of Si in delta-doped GaAs and AlGaAs and its application to electron-mobility optimization in selectively doped heterostructures" *GaAs and Related Compounds* Ed. J. S. Harris. (1989)
52. E. F. Schubert, T. D. Harris, J. E. Cunningham, and W. Jan "Multi-subband photoluminescence in sawtooth doping superlattices" *Physical Review* **B39**, 11011 (1989)
53. J. E. Cunningham, G. Timp, A. M. Chang, T. H. Chiu, W. Jan, E. F. Schubert, and W. T. Tsang "Spatial localization of Si in selectively delta-doped AlGaAs/GaAs heterostructures for high mobility and density realization" *Journal Crystal Growth* **95**, 253 (1989)
54. B. Ullrich, C. Zhang, E. F. Schubert, J. E Cunningham., and K. von Klitzing "Transmission spectroscopy on sawtooth doping superlattices" *Physical Review* **B39**, 3776 (1989)
55. E. F. Schubert, J. E. Cunningham, T. H. Chiu, J. B. Stark, B. Tell, and C.W Tu. "Spatial localization and diffusion of Si in delta-doped GaAs and AlGaAs and its application to electron-mobility optimization in selectively doped heterostructures" *GaAs and Related Compounds 1988* (Institute Physics Conference Series **96**, Bristol, 1989) p. 33
56. A. M Glass., E. F. Schubert, B. A. Wilson, C. E. Bonner, J. E. Cunningham, D. H. Olson, and W. Jan "A novel photo-voltaic delta-doped GaAs superlattice structure" *Applied Physics Letters* **54**, 2247 (1989)
57. E. F. Schubert, L. Pfeiffer, K. W. West, and A. Izabelle "Dopant distribution for maximum carrier-mobility in selectively doped $Al_{0.30}Ga_{0.70}As$/GaAs heterostructures" *Applied Physics Letters* **54**, 1350 (1989)
58. J. E. Cunningham, G. Timp, T. Chiu, W. T Tsang., E. F. Schubert, and W. Jan "Mobility and density enhancement in delta-doped $Al_{0.30}Ga_{0.70}As$/GaAs heterostructures" *GaAs and Related Compounds 1988* (Institute Physics Conference Series, **96**, Bristol, 1989) p. 33
59. E. F. Schubert, C. W. Tu, R. Kopf, J. M. Kuo and L. M. Lunardi "Diffusion and drift of Si-dopants in delta-doped n-type AlGaAs" *Applied Physics Letters* **54**, 2592 (1989)
60. E. F. Schubert, J. P. van der Ziel, J. E. Cunningham, and T. D. Harris "Tunable stimulated emission of radiation in GaAs doping superlattices" *Applied Physics Letters* **55**, 757 (1989)
61. E. F. Schubert, T. D. Harris, and J. E. Cunningham "Quantum-confined optical interband transitions in delta-doped doping superlattices" *Proceedings of Mats. Research Society* Editors: C. W. Tu and A. C. Gossard **145**, 21 (1989)
62. D. G. Deppe, A. Y. Cho, K. F. Huang, R. J. Fischer, K. Tai, E. F Schubert, and Y. K. Chen "AlGaAs-GaAs and AlGaAs-GaAs-InGaAs vertical cavity surface emitting lasers with Ag mirrors" *Journal of Applied Physics* **66**, 5629 (1989)
63. W. S. Hobson, Pearton S., Schubert E. F., and Cabaniss G. "Zinc delta-doping of GaAs by organometallic vapor phase epitaxy" *Applied Physics Letters* **55**, 1546 (1989)

1990

64. (**Invited**) E. F. Schubert, J. M. Kuo, and R. F. Kopf "Theory and experiment of capacitance-voltage profiling on semiconductors with quantum confinement" *Journal Electronic Materials, Special Issue on "Artificially Structured Materials"* **19**, 521 (1990)
65. (**Invited**) E. F. Schubert "Delta-doping of III-V compound semiconductors: Fundamentals and device applications" *Journal of Vacuum Science and Techn*ology, **A8**, 2980 (1990)
66. (**Invited**) E. F. Schubert "Optical properties of delta-doped doping superlattices" *Surface Science*, **228**, 240 (1990)

Pictiva EX2016
Samsung v Pictiva
IPR2024-01095

67. E. F. Schubert, J. M. Kuo, R. F. Kopf, H. S. Luftman, L. C. Hopkins, and N. J. Sauer, "Beryllium delta-doping of GaAs grown by molecular beam epitaxy" *Journal of Applied Physics* **67**, 1969 (1990)
68. D. G. Deppe, N. D. Gerrard, C. J. Pinzone, R. D. Dupuis, and E. F. Schubert "Quarter-wave Bragg reflector stack of InP/$In_{0.53}Ga_{0.47}As$ for 1.65 μm wavelength" *Applied Physics Letters* **56**, 315 (1990)
69. E. F. Schubert, J. M. Kuo, R. F. Kopf, A. S. Jordan, H. S. Luftman, and L. C. Hopkins "Fermi-level-pinning induced dopant redistribution in semiconductors during growth by molecular beam epitaxy" *Physical Review* **42**, 1364 (1990)
70. E. F. Schubert, R. F. Kopf, J. M. Kuo, H. S. Luftman, and P. A. Garbinski "Spatial resolution of the capacitance-voltage profiling technique on semiconductors with quantum confinement" *Applied Physics Letters* **57**, 497 (1990)
71. (**Invited**) E. F. Schubert "Optical and electronic properties of delta-doped doping superlattices" *Journal of Optical and Quantum Electronics*, **22**, S141 (1990)
72. E. F. Schubert, L.-W. Tu, R. F. Kopf, G. J. Zydzik, and D. G. Deppe "Low threshold vertical cavity surface emitting lasers with metallic reflectors" *Applied Physics Letters*, **57**, 117 (1990)
73. E. F. Schubert, F. Capasso, A. L. Hutchinson, S. Sen, and A. C. Gossard "Observation of charge storage and intra-subband relaxation in resonant tunneling via a high sensitivity capacitance technique" *Applied Physics Letters*, **57**, 2820 (1990)
74. H.-J. Gossmann, E. F. Schubert, D. J. Eaglesham, and M. Cerullo "Low temperature Si molecular beam epitaxy: Solution to the doping problem" *Applied Physics Letters*, **57**, 2440 (1990)
75. S. W. Downey, R. F. Kopf, E. F. Schubert, and J. M. Kuo "Resonance ionization mass spectrometry of AlGaAs: Resolution, sensitivity, and matrix effect" *Applied Optics*, **29**, 4938 (1990)
76. L.-W. Tu, E. F. Schubert, R. F Kopf., G. J., Zydzik M. Hong, S. N. G. Chu, and J. P. Mannaerts "Vertical cavity surface emitting lasers with semitransparent metallic mirrors and high quantum efficiencies" *Applied Physics Letters*, **57**, 2045 (1990)
77. E. F. Schubert, H. S. Luftman, R. F. Kopf, R. L Headrick., and J. M. Kuo "Secondary ion mass spectroscopy on delta-doped GaAs grown by molecular beam epitaxy" *Applied Physics Letters*, **57**, 1799 (1990)
78. H.-J. Gossmann, E. F. Schubert, D. J. Eaglesham, and M. Cerullo "Si molecular beam epitaxy at room temperature: Solution to the Si doping problem" *Proceedings of the International Conference on Electronic Materials*, 11541-9008-48TM

1991

79. (**Invited**) E. F. Schubert and R. F. Kopf "Delta-doping in III-V semiconductors" *Materials Science Forum*, 65 & 66, 53 (Trans Tech Publications, Zürich, 1991)
80. L.-W. Tu, Y. H. Wang, E. F. Schubert, B. E. Weir, G. J. Zydzik, and A. Y. Cho "High temperature performance of three-quantum-well vertical-cavity top-emitting lasers" *Electronics Letters* **27**, 457 (1991)
81. L.-W. Tu, E. F. Schubert, H. M. O'Brian, Y.-H. Wang, B. E Weir., G. J. Zydzik, and A. Y. Cho "Transparent conductive metal-oxide contacts in vertical-injection top-emitting quantum well lasers" *Applied Physics Letters* **58**, 790 (1991)
82. L. Pfeiffer, E. F. Schubert, K. W. West, and C. W. Magee "Si dopant migration and the AlGaAs/GaAs inverted interface" *Applied Physics Letters* **58**, 2258 (1991)
83. E. F. Schubert "Doping distributions in III-V semiconductors" *Advanced Processing and Characterization Technologies, American Vacuum Society Series* **10**, 5 (American Institute of Physics, New York, 1991)
84. R. F. Kopf, E. F Schubert, T. D Harris., and R. S. Becker "Photoluminescence of GaAs quantum wells grown by molecular-beam epitaxy with growth interruptions" *Applied Physics Letters* **58**, 631 (1991)

1992

85. W. T. Tsang, E. F. Schubert, and J. E. Cunningham "Doping in semiconductors with variable activation energy: A new concept and demonstration" *Applied Physics Letters* **60**, 115 (1992)
86. E. F. Schubert "Smart doping of III-V semiconductor heterostructure devices" *Proceedings 180th Electrochem. Society Mtg., State-of-the-Art Program on Compound Semiconductors* **92-19**, 85 (1992)
87. E. F. Schubert, L.-W. Tu, G. J. Zydzik, R. F. Kopf, A. Benvenuti, and M. R. Pinto "Elimination of heterojunction band discontinuities by modulation doping" *Applied Physics Letters* **60**, 466 (1992)
88. E. F. Schubert, Y.-H. Wang, A. Y. Cho, L. W. Tu, and G. J. Zydzik "Resonant cavity light emitting diode" *Applied Physics Letters* **60**, 921 (1992)
89. R. F. Kopf, E. F. Schubert, S. W. Downey, and A. B. Emerson "P- and n-type dopant profiles in distributed Bragg reflector structures and their effect on resistance" *Applied Physics Letters* **61**, 1820 (1992)

Pictiva EX2016
Samsung v Pictiva
IPR2024-01095

90. E. F. Schubert, A. M. Vredenberg, N. E. J. Hunt, Y. H. Wong, P. C. Becker, J. M Poate., D. C. Jacobson, L. C. Feldman, and G. J. Zydzik "Giant enhancement of luminescence intensity in Er-doped Si/SiO_2 resonant cavities" *Applied Physics Letters* **61**, 1381 (1992)
91. N. E. J. Hunt, E. F. Schubert, R. A Logan., and G. J. Zydzik "Enhanced spectral power density and reduced linewidth at 1.3 μm in an InGaAsP quantum-well resonant-cavity light-emitting diode" *Applied Physics Letters* **61**, 2287 (1992)
92. R. F. Kopf, E. F. Schubert, S. W. Downey, and A. B. Emerson "Resonance ionization of device materials" *Institute of Physics Conference Series* **128**, 255 (1992)
93. N. E. J. Hunt, E. F. Schubert, D. L. Sivco, A. Y. Cho, and G. J. Zydzik "Power and efficiency limits in single mirror light emitting diodes with enhanced intensity" *Electronics Letters* **28**, 2169 (1992)
94. N. E. J. Hunt, E. F. Schubert, R. A. Logan, and G. J. Zydzik "Extremely narrow spectral widths from resonant cavity light-emitting diodes (RCLEDs) suitable for wavelength-division multiplexing at 1.3 μm and 1.55 μm" *Proceedings of the International Electron Devices Meeting (IEDM)* **1992**, 651 (1992)
95. A. M. Vredenberg, N. E. J. Hunt, E. F. Schubert, P. C. Becker, D. C. Jacobson, J. M. Poate, and G. J. Zydzik "Erbium implantation in optical microcavities for controlled spontaneous emission" *Proceedings Ion Implantation Technology - 92*

1993

96. (**Book**) E. F. Schubert "Doping in III-V semiconductors" *Cambridge University Press*, ISBN 0-521-41919-0, 606 pages (1993)
97. E. F. Schubert and R. F. Kopf "Selective n- and p-type C-doping in $Ga_{0.47}In_{0.53}As$ superlattices" *Journal Crystal Growth*. **127**, 1037 (1993)
98. H. Yao, E. F. Schubert, and R. F. Kopf "Raman and ellipsometric studies of delta-doped GaAs" *Materials Research Society Symposium Proceedings* **261**, 57 (1993)
99. (**Invited**) H.-J. Gossmann and E. F. Schubert "Delta doping in silicon" *CRC Critical Reviews in Solid-State and Materials Sciences* **18**, 1 (1993)
100. A. M. Vredenberg, N. E. J. Hunt, E. F. Schubert, D. C. Jacobson, J. M. Poate, and G. J. Zydzik "Controlled atomic spontaneous emission from Er^{3+} in a transparent Si/SiO_2 microcavity" *Physical Review Letters* **71**, 517 (1993)
101. (**Invited**) E. F. Schubert, R. F. Kopf, and T. D. Harris "Interface configurations of AlGaAs /GaAs quantum wells probed by photoluminescence spectroscopy" *Materials Research Society Symposium Proceedings* **280**, 203 (1993)
102. R. F. Kopf, E. F. Schubert, T. D. Harris, R. S. Becker, and G. H. Gilmer "Modification of GaAs/AlGaAs growth-interrupted interfaces through changes in ambient conditions during growth" *Journal of Applied Physics* **74**, 6139 (1993)
103. N. E. J. Hunt, E. F. Schubert, and G. J. Zydzik "A resonant-cavity p-i-n photodetector utilizing an electron-beam evaporated Si/SiO_2 microcavity" *Applied Physics Letters* **63**, 391 (1993)
104. N. E. J. Hunt, E. F. Schubert, R. F. Kopf, D. L. Sivco, A. Y. Cho, and G. J. Zydzik "Increased fiber communications bandwidth from a resonant cavity light emitting diode emitting at λ = 940 nm" *Applied Physics Letters* **63**, 2600 (1993)
105. E. F. Schubert, N. E. J. Hunt, A. M. Vredenberg, T. D. Harris, J. M. Poate, D. C Jacobson., Y. H Wong., and G. J. Zydzik "Enhanced luminescence by resonant absorption in Er-doped Si/SiO_2 microcavities" *Applied Physics Letters* **63**, 2603 (1993)

1994

106. E. F. Schubert, N. E. J. Hunt, M. Micovic, R. J. Malik, D. L. Sivco, A. Y. Cho, and G. J. Zydzik "Highly efficient light-emitting diodes with microcavities" *Science* **265**, 943 (1994)
107. (**Invited**) E. F. Schubert "Delta-doping of semiconductors: electronic, optical, and structural properties of materials and devices" in *Artificially Structured Semiconductors*, Vol. **40**, Ed. by Gossard A. C. in Semiconductors and Semimetals, Editors: Willardson R. K., Beer A. C., and Weber E. R. (1994)
108. (**Invited**) E. F. Schubert, N. E. J. Hunt, D. L. Sivco, and A. Y. Cho "Resonant-cavity light-emitting devices" *Brazilian Journal of Physics*. **24**, 445 (1994)
109. E. F. Schubert, M. Passlack, M. Hong, J. Mannaerts, R. L. Opila, L. N. Pfeiffer, K. W. West, C. G. Bethea, and G. J. Zydzik, "Properties of Al_2O_3 optical coatings on GaAs produced by oxidation of epitaxial AlAs/GaAs films" *Applied Physics Letters* **64**, 2976 (1994)
110. E. F. Schubert, L. Pfeiffer, K. W. West, H. S. Luftman, and G. J. Zydzik "Si delta-doping of ⟨011⟩ oriented GaAs and AlGaAs grown by molecular beam epitaxy" *Applied Physics Letters* **64**, 2238 (1994)

Pictiva EX2016
Samsung v Pictiva
IPR2024-01095

111. M. Passlack, N. E. J. Hunt, E. F. Schubert, G. J. Zydzik, M. Hong, J. P. Mannaerts, R. L. Opila, and R. J. Fischer "Dielectric properties of electron-beam deposited Ga_2O_3 films" *Applied Physics Letters* **64**, 2715 (1994)
112. E. F. Schubert, L. Pfeiffer, K. W. West, H. S. Luftman, and G. J. Zydzik "Si delta-doping of ⟨011⟩-oriented GaAs and AlGaAs grown by molecular-beam epitaxy" *Applied Physics Letters* **64**, 2238 (1994)
113. E. F. Schubert "Doping in III-V semiconductors" *Materials Research Society Proceedings* (1994/1995) Ed. Tu C. W.
114. E. F. Schubert, S. W. Downey, C. Pinzone, and A. B. Emerson "Evidence of very strong inter-epitaxial-layer diffusion in Zn doped GaInPAs/InP structures" *Applied Phys A* June (1995)
115. E. F. Schubert and N. E. J. Hunt "Highly efficient light-emitting diodes with microcavities" *Proceedings of the International Symposium on Compound Semiconductors* (1994/1995)

1995

116. (**Invited**) N. E. J. Hunt, E. F. Schubert, D. L. Sivco, A. Y. Cho, R. F., Kopf Logan R. A., and Zydzik G. J. "High efficiency, narrow spectrum resonant cavity light-emitting diodes" in *Confined Electrons and Photons* Editors: Burstein E. and Weisbuch C. (Plenum Press, New York, 1995)
117. (**Invited**) N. E. J. Hunt, A. M. Vredenberg, E. F. Schubert, P. C. Becker, D. C. Jacobson, J. M. Poate, and G. J. Zydzik "Spontaneous emission control of Er^{3+} in Si/SiO_2 micro-cavities" in *Confined Electrons and Photons*; Editors: E. Burstein and C. Weisbuch (Plenum Press, New York, 1995)
118. M. Passlack, M. Hong, E. F. Schubert, J. R. Kwo, J. P. Mannerts, S. N. G. Chu, N. Moriya, and F. A. Thiel "In situ fabricated Ga_2O_3-GaAs structures with low interface recombination velocity" *Applied Physics Letters* **66**, 625 (1995)
119. E. F. Schubert and N. E. J. Hunt, Ed. H. Goronkin, and U. Mishra "Highly efficient light-emitting diodes with microcavities" *Compound Semiconductors 1994*. Proceedings of the Twenty-First International Symposium, p. xxvii+912, 489 (1995)
120. M. Passlack, M. Hong, E. F. Schubert, J. R. Kwo, J. P. Mannerts, W. S. Hobson, N. Moriya, J. Lopata, and G. J. Zydzik "Ga_2O_3 films for insulator/III-V semiconductor interfaces" *Institute Physics Conference Series No*. **141**: Chapter 5, 597 (1995)
121. M. Passlack, M. Hong, E. F. Schubert, J. P. Mannaerts, W. S. Hobson, N. Moriya, J. Lopata, and G. J. Zydzik, H. Ed. Goronkin and U. Mishra "Ga_2O_3 films for insulator/III-V semiconductor interfaces" *Compound Semiconductors 1994*. Proceedings of the Twenty-First International Symposium, p. xxvii+912, 597 (1995)
122. L.-W. Tu, E. F. Schubert, Y. H. Wang, B. E. Weir, G. J. Zydzik, and A. Y. Cho "Superior output linearity of optimized double heterostructure vertical-cavity top-emitting lasers" *Applied Physics Letters* **66**, 2315 (1995)
123. E. F. Schubert and J. M. Poate "Er-doped Si/SiO_2 microcavities" *Proceedings of the SPIE- The International Society for Optical Engineering* (USA), Vol. **2397**, p. 495 (1995)
124. M. Passlack, C. G. Bethea, W. S. Hobson, J. Lopata, E. F. Schubert, G. J. Zydzik, D. T. Nichols, J. F. de Jong, U. K. Chakrabarti, and N. K. Dutta "Infrared microscopy studies on high-power InGaAs-GaAs-InGaP lasers with Ga_2O_3 facet coatings" *IEEE Journal on Selected Topics Quantum Electronics* **1**, 110 (1995)
125. E. F. Schubert, S. W. Downey, C. Pinzone, and A. B. Emerson "Evidence of very strong inter-epitaxial-layer diffusion in Zn-doped GaInPAs/InP structures" *Applied Physics A* **60**, 525 (1995)
126. E. F. Schubert, C. J. Pinzone, and M. Geva "Phenomenology of Zn diffusion and incorporation in InP grown by organometallic vapor-phase epitaxy" *Applied Physics Letters* **67**, 700 (1995)
127. N. K. Dutta, W. S. Hobson, J. Lopata, E. F. Schubert, and M. Passlack "Single mode, high power lasers emitting at 980 nm" *Proceedings SPIE - Int. Society Opt. Eng*. (USA), Proceedings of the SPIE - The International Society for Optical Engineering, **2382**, 138 (1995)
128. M. Passlack, E. F. Schubert, W. S. Hobson, M. Hong, N. Moriya, S. N. G. Chu, K. Konstadinidis, J. P. Mannaerts, M. L. Schnoes, and G. J. Zydzik "Ga_2O_3 films for electronic and optoelectronic applications" *Journal of Applied Physics* **77**, 686 (1995)

1996

129. (**Book**) E. F. Schubert, Editor "Delta Doping of Semiconductors" 604 pages, Cambridge University Press, Cambridge ISBN 0-521-48288-7 (1996)
130. E. F. Schubert, N. E. J. Hunt, R. J. Malik, M. Micovic, and D. L. Miller "Temperature and Modulation Characteristics of Resonant-Cavity Light-Emitting Diodes" *IEEE J. Lightwave Technology* **14**, 1721 (1996)
131. W. Grieshaber, E. F. Schubert, I. D. Goepfert, R. F. Karlicek Jr., M. J. Schurman, and C. Tran "Competition between band gap and yellow luminescence in GaN and its relevance for optoelectronic devices" *Journal of Applied Physics* **80**, 4615 (1996)
132. L.-W. Tu, E. F. Schubert, M. Hong, and G. J. Zydzik "In-vacuum cleaving and coating of semiconductor laser facts using thin Si and a dielectric" *Journal of Applied Physics* **80**, 6448 (1996)

Pictiva EX2016
Samsung v Pictiva
IPR2024-01095

133. E. F. Schubert, W. Grieshaber, and I. D. Goepfert "Enhancement of deep acceptor activation in semiconductors by superlattice doping" *Applied Physics Letters* **69**, 3737 (1996)
134. E. F. Schubert "GaAs light-emitting diodes" in *Gallium Arsenide, 3rd Ed*., edited by Brozel M. R. and Stillman G. E. (INSPEC, The Institution of Electrical Engineers, London, 1996)

1997

135. W. Grieshaber, E. F. Schubert, R. F. Karlicek Jr., M. J. Schurman, and C. Tran "Relevance of the GaN yellow luminescence for light-emitting diodes" *Proceedings SPIE*, "Light-Emitting Diodes: Research, Manufacturing, and Applications" Vol. **3002**, 40 (1997)
136. M. Passlack, M. Hong, E. F. Schubert, G. J. Zydzik, J. P. Mannaerts, W. S. Hobson, and T. D. Harris "Equilibrium and non-equilibrium transport properties of metal - Ga_2O_3-GaAs MOS structures" *Journal of Applied Physics* **81**, 7647 (1997)
137. S. Fan, P. R. Villeneuve, J. D. Joannopoulos, and E. F. Schubert "High extraction efficiency of spontaneous emission from slabs of photonic crystals" *Physical Review Letters*, **78**, 3294 (1997)
138. A. Billeb, W. Grieshaber, D. Stocker, E. F. Schubert, and R. F. Karlicek Jr. "Microcavity effects in GaN epitaxial layers" *Applied Physics Letters* **70**, 2790 (1997)
139. S. Fan, P. R. Villeneuve, J. D. Joannopoulos, and E. F. Schubert "Photonic crystal light emitting diodes" *Proceedings SPIE*, "Light-Emitting Diodes: Research, Manufacturing, and Applications" Vol. **3002**, 67 (1997)
140. L.-W. Tu, E. F. Schubert, M. Hong, and G. J. Zydzik "In-situ cleaving and coating of semiconductor laser facets" *Proceedings of the March Meeting of the American Physical Society*, Kansas, MO, March 17 – 21 (1997)
141. E. F. Schubert, Editor, *SPIE Proceedings Series*, Vol. **3002** "Light-Emitting Diodes: Research, Manufacturing, and Applications" (1997)
142. E. F. Schubert, I. D. Goepfert, W. Grieshaber, and J. M. Redwing "Optical properties of Si-doped GaN" *Applied Physics Letters* **71**, 921 (1997)
143. E. F. Schubert, I. Goepfert, and J. M. Redwing "Evidence of compensating centers as origin of yellow luminescence in GaN" *Applied Physics Letters* **71**, 3224 (1997)
144. T. Peng, J. Piprek, G. Qiu, J. O. Olowolafe, K. M. Unruh, C. P. Swann, and E. F. Schubert "Band gap bowing and refractive index spectra of polycrystalline AlInN films deposited by sputtering" *Applied Physics Letters* **71**, 2439 (1997)
145. Shanhui Fan, P. R. Villeneuve, J. D. Joannopoulos, and E. F. Schubert "High extraction efficiency of spontaneous emission from slabs of photonic crystals" *Physical Review Letters*, **78**, 3294 (1997)
146. D. A. Stocker, E. F. Schubert, W. Grieshaber, J. M. Redwing, K. S. Boutros, J. S. Flynn, and R. P. Vaudo "Fabrication and optical pumping of laser cavities made by cleaving and wet chemical etching" *Material Research Society Conference Proceedings*, Fall (1997)
147. I. D. Goepfert, E. F. Schubert, and J. M. Redwing "Luminescence properties of Si-doped GaN and evidence of compensating defects as the origin of the yellow luminescence" *Mater. Research Society Conference Proceedings*, Fall (1997)
148. I. D. Goepfert, E. F. Schubert, and J. M. Redwing "Luminescence properties of Si-doped GaN and evidence of compensating defects as the origin of the yellow luminescence" *Mater. Research Society Conference Proceedings* Vol. **482**, page 679, Fall (1997)
149. D. A. Stocker, E. F. Schubert, W. Grieshaber, J. M. Redwing, K. S. Boutros, J. S. Flynn, and R. P. Vaudo "Fabrication and optical pumping of laser cavities made by cleaving and wet chemical etching" *Mater. Research Society Conference Proceedings*, Vol. **482**, 1009 (1997)

1998

150. E. F. Schubert and N. E. J. Hunt "15,000 hours stable operation of resonant-cavity light-emitting diodes" *Applied Physics A* **66**, 319 (1998)
151. D. A. Stocker, E. F. Schubert, K. S. Boutros, J. S. Flynn, R. P. Vaudo, V. M. Phanse, and J. M. Redwing "Optically pumped InGaN/GaN double heterostructure lasers with cleaved facets" *Electronics Letters* **34**, 373 (1998)
152. L. W. Tu, Y. C. Lee, D. Stocker, and E. F. Schubert "Spatial distributions of near-band-gap UV and yellow emission on MOCVD grown GaN epifilms" *Physical Review B*, **B58**, p. 10696 (October 1998)
153. L. W. Tu, Y. C. Lee, S. J. Chen, I. Lo, D. Stocker, and E. F. Schubert "Yellow luminescence depth profiling on GaN epifilms using reactive ion etching, *Applied Physics Letters* **73**, 2802 (November 1998)
154. D. A. Stocker, E. F. Schubert, W. Grieshaber, K. S. Boutros, and J. M. Redwing "Facet roughness analysis for InGaN/GaN lasers with cleaved facets" *Applied Physics Letters* **73**, 1925 (October 1998)
155. D. A. Stocker, E. F. Schubert, and J. M. Redwing "Crystallographic wet chemical etching of GaN" *Applied Physics Letters* **73**, 2654 (November 1998)

Pictiva EX2016
Samsung v Pictiva
IPR2024-01095

156. E. F. Schubert, W. Grieshaber, K. S. Boutros, and J. M. Redwing "Yellow luminescence in MOCVD-grown n-type GaN" SPIE Proceedings **3279** (edited by E. F. Schubert), 59 (March 1998)
157. D. A. Stocker, E. F. Schubert, W. Grieshaber, K. S. Boutros, J. S. Flynn, R. P. Vaudo, V. M. Phanse, and J. M. Redwing "InGaN/GaN double heterostructure laser with cleaved facets" *Proceedings of the SPIE Photonics West Conference* (March 1998)

1999

158. (**Invited**) E. F. Schubert and N. E. J. Hunt "Enhancement of Spontaneous Emission in Microcavities" in *Vertical-Cavity Surface-Emitting Lasers*, edited by Carl W. Wilmsen, Henryk Temkin, and Larry A. Coldren, ISBN 0 521 59022 1, p. 68 (Cambridge University Press, Cambridge, April 1999)
159. (**Invited**) E. F. Schubert and J. N Miller "Light-Emitting Diodes - An Introduction" *Encyclopedia of Electrical Engineering*, edited by John G. Webster, Vol. **11**, p. 326 (John Wiley and Sons, New York, March 1999)
160. I. D. Goepfert, E. F. Schubert, A. Osinsky, and P. E. Norris "Demonstration of efficient p-type doping in AlGaN/GaN superlattice structures" *Electronics Letters* **35**, 1109 (June 1999)
161. D. A. Stocker, E. F. Schubert, K. S. Boutros, and J. M. Redwing "Fabrication of smooth GaN-based laser facets" *MRS Internet Journal Nitride Semiconductor Research* **4S1**, G7.5 (March 1999)
162. X. Guo, J. W. Graff, and E. F. Schubert "Photon Recycling Semiconductor Light Emitting Diode" *IEDM Technical Digest*, **IEDM-99**, 600 (December 1999)

2000

163. D. A. Stocker, I. D. Goepfert, E. F. Schubert, K. S. Boutros, and J. M. Redwing "Crystallographic wet chemical etching of p-type GaN" *Journal of the Electrochemical Society* **147**, 763 (February 2000)
164. I. D. Goepfert, E. F. Schubert, A. Osinsky, and P. E. Norris "Efficient acceptor activation in AlGaN/GaN doped superlattices" accepted by the *MRS Internet Journal Nitride Semiconductor Research*, *see* http://nsr.mij.mrs.org/5S1/W3.85/ (March 2000)
165. X. Guo, J. W. Graff, E. F. Schubert, and R. F. Karlicek Jr. "Photon Recycling Semiconductor Light Emitting Diode" *SPIE Photonics West Proceedings Series* Vol. **3938**, p. 60 "Light-Emitting Diodes: Research, Manufacturing, and Applications" (March 2000)
166. Y.-L. Li, E. F. Schubert, J. W. Graff, A. Osinsky, and W. F. Schaff "Low-resistance ohmic contacts to p-type GaN" *Applied Physics Letters* **76**, 2728 (May 2000)
167. X. Guo, J. W. Graff, and E. F. Schubert "Photon recycling for high brightness LEDs" *Compound Semiconductors* **6** (4) page 1 (May 2000)
168. J. W. Graff and E. F. Schubert "Flat free-standing silicon diaphragms using silicon-on-insulator (SOI) wafers" *Sensors and Actuators A* **84**, 276 (August 2000)
169. I. D. Goepfert, E. F. Schubert, A. Osinsky, P. E. Norris, and N. N. Faleev "Experimental and theoretical study of acceptor activation and transport properties in *p*-type $Al_xGa_{1-x}N$/GaN superlattices" *Journal of Applied Physics* **88**, 2030 (August 2000)
170. L. Chernyak, A. Osinsky, V. Fuflyigin, and E. F. Schubert "Electron-beam induced increase of electron diffusion length in p-type GaN and AlGaN/GaN superlattices" *Applied Physics Letters* **77**, 875 (August 2000)
171. J. W. Graff, E. F. Schubert, A. Osinsky "On the reduction of base resistance in GaN-based heterojunction bipolar transistors" Proceedings of the 2000 IEEE/Cornell Conference on High-Performance Devices, p. 28, ISBN 0-7803-6381-7 (October 2000)
172. A. Osinsky, V. Fuflyigin, L. D. Zhu, A. B. Goulakov, J. W. Graff, and E. F. Schubert "New concepts and preliminary results for SiC bipolar transistors: $ZnSiN_2$ and $ZnGaN_2$ heterojunction emitters" Proceedings of the 2000 IEEE/Cornell Conference on High-Performance Devices, p. 168, ISBN 0-7803-6381-7 (October 2000)
173. D. A. Stocker, E. F. Schubert, and J. M. Redwing "Optically pumped InGaN/GaN lasers with wet-etched facets" *Applied Physics Letters* **77**, 4253 (December 2000)
174. E. L. Waldron, E. F. Schubert, J. W. Graff, A. Osinsky, M. J. Murphy, and W. F. Schaff "Evidence of polarization effects in doped AlGaN/GaN superlattices" Proceedings of MRS Fall Conference (December 2000)

2001

175. J. W. Graff, E. F. Schubert, and A. Osinsky "GaN/SiC mesa junctions for HBTs fabricated using selective photoelectrochemical etching" *Electronics Letters* **37**, 249 (February 2001)
176. X. Guo, E. F. Schubert, and J. Jahns, "Current crowding and optical saturation effects in GaInN/GaN LEDs grown on insulating substrates" *SPIE Photonics West Proceedings Series*. Vol. 4278, p. 133 "Light-Emitting Diodes: Research, Manufacturing, and Applications" (February 2001)
177. L. Chernyak, A. Osinsky, V. Fuflyigin, J. Graff, and E. F. Schubert "Minority Electron Transport Anisotropy in p-type $Al_xGa_{1-x}N$/GaN Superlattices" *IEEE Transactions on Electron Devices* **48**, 433 (March 2001)

Pictiva EX2016
Samsung v Pictiva
IPR2024-01095

178. X. Guo and E. F. Schubert "Current crowding and optical saturation effects in GaInN/GaN light-emitting diodes" *Applied Physics Letters* **78**, 3337 (May 2001)
179. X. Guo, Y.-L. Li, and E. F. Schubert "Efficiency of GaN/InGaN light-emitting diodes with interdigitated mesa geometry" *Applied Physics Letters* **79**, 1936 (Sept. 2001)
180. E. L. Waldron, J. W. Graff, and E. F. Schubert "Improved mobilities and resistivities in modulation doped p-type AlGaN/GaN superlattices" *Applied Physics Letters* **79,** 2737 (October 2001)
181. E. L. Waldron, J. W. Graff, and E. F. Schubert "Influence of doping profiles on p-type AlGaN/GaN superlattices," *Physica Status Solidi* (*A*) **188**, 889 (November 2001)
182. Y.-L. Li, J. W. Graff, E. L. Waldron, T. Gessmann, and E. F. Schubert "Novel polarization enhanced contacts to *n*-type GaN" *Physica Status Solidi (A)* 188, 359 (November 2001)

2002

183. T. Gessmann, Y.-L. Li, E. L. Waldron, J. W. Graff, and E. F. Schubert "Ohmic contacts to p-type GaN mediated by polarization fields in thin InGaN capping layers" *Applied Physics Letters* **80**, 986 (Feb 2002)
184. L. Chernyak, A. Schulte, J. W. Graff, and E. F. Schubert "Influence of electron injection on performance of GaN photodetectors" *Applied Physics Letters* **80**, 926 (Feb 2002)
185. T. Gessmann, Y.-L. Li, E. L. Waldron, and E. F. Schubert "Novel type of ohmic contacts to p-doped GaN using polarization fields in thin $In_xGa_{1-x}N$ capping layers" *Journal of Electronic Materials* **31**, 416 (May 2002)
186. T. Gessmann, J. W. Graff, Y.-L. Li, E. L. Waldron, and E. F. Schubert "Ohmic contact technology in III-V nitrides using polarization effects in cap layers" Proceedings of the *Lester Eastman conference on high-speed devices* (Sep 2002)
187. T. Gessmann, J. W. Graff, Y.-L. Li, E. L. Waldron, and E. F. Schubert "Ohmic contacts to III-V nitrides using polarization effects of cap layers" *Journal of Applied Physics* **92**, 3740 (October 2002)

2003

188. E. L. Waldron, E. F. Schubert, and A. M. Dabiran "Multisubband photoluminescence in p-type modulation-doped AlGaN/GaN superlattices" *Physical Review B* **67**, 045327 (January 2003)
189. (**Book**), E. F. Schubert "Light-emitting diodes" 328 pages, 154 line diagrams, 21 half-tones, 21 tables, Hardback ISBN: 0521823307 Paperback ISBN: 0521533511 (Cambridge University Press, Cambridge UK, May 2003)
190. T. Gessmann, Y.-L. Li, E. F. Schubert, J. W. Graff, and J. K. Sheu "GaInN light-emitting diodes with omni-directional reflectors", *SPIE Proceedings Series* **4996** "Light Emitting Diodes: Research, Manufacturing, and Applications VII" p. 26 (July 2003)
191. T. Gessmann, E. F. Schubert, J. W. Graff, and K. Streubel "AlGaInP light-emitting diodes with omni-directionally reflecting submount", *SPIE Proceedings Series* **4996** "Light Emitting Diodes: Research Manufacturing, and Applications VII" p. 139 (July 2003)
192. E. F. Schubert, K. J. Linden, H. Yao, D. J. McGraw (Editors) "Light-Emitting Diodes: Research, Manufacturing, and Applications VII" *SPIE Proceedings Series* **4996**, SPIE-International Society for Optical Engineering ISBN: 081944796X Paperback, 278pp (July 2003)
193. Y.-L. Li, T. Gessmann, E. F. Schubert, and J. K. Sheu "Carrier dynamics in nitride-based light-emitting p-n junction diodes with two active regions emitting at different wavelengths" *Journal of Applied Physics* **94**, 2167 (August 2003)
194. J. M. Shah, Y.-L. Li, T. Gessmann, and E. F. Schubert "Experimental analysis and theoretical model for anomalously high ideality factors ($n >> 2.0$) in AlGaN/GaN p-n junction diodes" *Journal Applied Physics* **94,** 2627 (August 2003)
195. T. Gessmann, E. F. Schubert, J. W. Graff, K. Streubel, and C. Karnutsch "Omni-directionally reflective contacts for light-emitting diodes" *IEEE Electron Devices Letters* **24**, 683 (November 2003)
196. E. L. Waldron, Y.-L. Li, E. F. Schubert, J. W. Graff, and J. K. Sheu "Experimental study of perpendicular transport in weakly coupled $Al_xGa_{1-x}N$/GaN superlattices and theoretical model based on sequential tunneling" accepted for publication in *Applied Physics Letters* **83**, 4975 (2003)

2004

197. J. M. Shah, Y. Li, T. Gessmann, and E. F. Schubert "Experimental analysis and a new theoretical model for anomalously high ideality factors ($n >> 2.0$) in GaN-based p-n junction diodes" *Mater. Research Society Symposium Proceedings* **798**, 113 (January 2004)
198. T. Gessmann, H. Luo, J.-Q. Xi, K. P. Streubel, and E. F. Schubert "Light-emitting diodes with integrated omnidirectionally reflective contacts" *Proceedings of SPIE "Light-emitting diodes: Research, Manufacturing and Applications VIII*" **5366**, 53 (January 2004)

Pictiva EX2016
Samsung v Pictiva
IPR2024-01095

199. T. Gessmann and E. F. Schubert "High-efficiency AlGaInP light-emitting diodes for solid-state lighting applications" *Journal of Applied Physics* **95**, 2203 (March 2004)
200. J. K. Kim, E. L. Waldron, Y.-L. Li, T. Gessmann, E. F. Schubert, H. W. Jang, and J.-L. Lee "P-type conductivity in bulk $Al_xGa_{1-x}N$ and $Al_xGa_{1-x}N/Al_yGa_{1-y}N$ superlattices with average Al mole fraction > 20 %" *Applied Physics Letters* **84**, 3310 (May 2004)
201. J. K. Kim, T. Gessmann, H. Lu, and E. F. Schubert "GaInN light-emitting diodes with $RuO_2/SiO_2/Ag$ omni-directional reflector" *Applied Physics Letters* **84**, 4508 (May 2004)
202. Y.-L. Li, J. M. Shah, P.-H. Leung, T. Gessmann, and E. F. Schubert, "Performance characteristics of white light sources consisting of multiple light-emitting diodes" *Proceedings of the SPIE - The International Society for Optical Engineering* **5187**, 178 (August 2004)
203. Y. Xi and E. F. Schubert "Junction-temperature measurement in GaN ultraviolet light-emitting diodes using diode forward-voltage method" *Applied Physics Letters* **85**, 2163 (Sept. 2004)
204. Y. Xi and E. F. Schubert "Junction-temperature measurement in GaN UV light-emitting diodes using the diode forward voltage" *2004 Proceedings of the Lester Eastman Conference on High-Performance Devices – Selected Topics in Electronics and Systems* edited by Robert E. Leoni III, Vol. **35**, p. 84 (December 2004)
205. J.-Q. Xi, M. Ojha, W. Cho, T. Gessmann, E. F. Schubert, J. L. Plawsky, and W. N. Gill "Omni-directional reflector using a low refractive index material" *2004 Proceedings of the Lester Eastman Conference on High-Performance Devices – Selected Topics in Electronics and Systems* edited by Robert E. Leoni III, Vol. **35**, p. 102 (December 2004)
206. (**Invited**) J. K. Kim, J. Q. Xi, H. Luo, T. Gessmann, and E. F. Schubert "High-Reflectivity Omni-Directional Reflectors for Light-Emitting Diodes" *Proceedings of the IEDMS* (December 2004)

2005

207. Y. Xi, J.-Q. Xi, T. Gessmann, J. M. Shah, J. K. Kim, E. F. Schubert, A. J. Fischer, M. H. Crawford, K. H. A. Bogart, and A. A. Allerman "Junction and carrier temperature measurements in deep-ultraviolet light-emitting diodes using three different methods" *Applied Physics Letters* **86**, 031907 (January 2005)
208. Y. Xia, E. Williams, Y. Park, I. Yilmaz, J. M. Shah, E. F. Schubert, and C. Wetzel "Discrete steps in the capacitance-voltage characteristics of GaInN/GaN light-emitting diode structures" in "GaN, AlN, InN, and Their Alloys", edited by C. Wetzel, B. Gil, M. Kuzuhara, and M. Manfra, *Materials Research Society (MRS) Symposium Proceedings* **831**, E3.38 (MRS, Warrendale PA, January 2005)
209. Y. Xi, J.-Q. Xi, T. Gessmann, J. M. Shah, J. K. Kim, E. F. Schubert, A. J. Fischer, M. H. Crawford, K. H. A. Bogart, and A. A. Allerman "Junction temperature measurements in deep-UV light-emitting diodes" in "GaN, AlN, InN and Their Alloys" edited by C. Wetzel, B. Gil, M. Kuzuhara, and M. Manfra, *Materials Research Society (MRS) Symposium Proceedings* **831**, E1.7 (MRS, Warrendale PA, January 2005)
210. S. Chhajed, Y. Xi, Y.-L. Li, T. Gessmann, and E. F. Schubert "Influence of junction temperature on luminous efficacy and color rendering properties of a trichromatic LED-based white light source" *Journal of Applied Physics* **97**, 054506 (February 2005)
211. (**Invited**) J. K. Kim, H. Luo, Y. Xi, J. M. Shah, T. Gessmann, and Schubert E. F. "Enhancement of light extraction in GaInN light-emitting diodes by diffuse omni-directional reflectors" *Proceedings of the Second Asia-Pacific Workshop on Wide-gap Semiconductors* (APWS-2005) Hsinchu Lakeshore Hotel, Hsinchu, Taiwan, March 7–9 (March 2005)
212. M. Furis, A. N. Cartwright, E. L. Waldron, and E. F. Schubert "Spectral and temporal resolution of recombination from multiple excitation states in modulation-doped AlGaN/GAN MQW heterostructures" *Applied Physics Letters* **86**, 162103 (April 2005)
213. (**Invited**) E. F. Schubert and J. K. Kim "Solid-state light sources getting smart" *Science* **308**, 1274 (May 2005)
214. J.-Q. Xi, M. Ojha, W. Chow, C. Wetzel, T. Gessmann, E. F. Schubert, J. L. Plawsky, and W. N. Gill "Omni-directional reflector using a low refractive index material" *Proceedings of the Conference on Lasers and Electrooptics* (CLEO), Baltimore MD, May 22-27 (May 2005)
215. J. K. Kim, H. Luo, E. F. Schubert, J. Cho, C. Sone, and Y. Park "Strongly enhanced phosphor efficiency in GaInN white light-emitting diodes using remote phosphor configuration and diffuse reflector cup" *Japanese Journal Applied Physics – Express Letter* **44**, L 649 (May 2005)
216. H. Luo, J. K. Kim, E. F. Schubert, J. Cho, C. Sone, and Y. Park "Analysis of high-power packages for phosphor-based white-light-emitting diodes" *Applied Physics Letters* **86**, 243505 (June 2005)
217. J.-Q. Xi, M. Ojha, W. Cho, J. L. Plawsky, W. N. Gill, T. Gessmann, and E. F. Schubert "Omnidirectional reflector using nanoporous SiO_2 as a low-refractive-index material" *Optics Letters* **30,** 1518 (June 2005)
218. J.-Q. Xi, J. K. Kim, and E. F. Schubert "Silica nanorod-array films with very low refractive indices" *Nano Letters* **5**, 1385 (July 2005)

Pictiva EX2016
Samsung v Pictiva
IPR2024-01095

219. (**Invited**) E. F. Schubert, J. K. Kim, and T. Gessmann "Light-emitting diodes" *Kirk-Othmer Encyclopedia of Chemical Technology*; on-line access at < www.mrw.interscience.wiley.com/kirk/ > (John Wiley and Sons and Wiley Inter-Science, New York NY, July 2005)
220. J.-Q. Xi, M. Ojha, J. L. Plawsky, W. N. Gill, J. K. Kim, and E. F. Schubert "Internal high-reflectivity omni-directional reflectors" *Applied Physics Letters* **87**, 031111 (July 2005)
221. (**Invited**) E. F. Schubert and T. Gessmann "Light-emitting diodes" published in "*Elsevier Encyclopedia of Condensed Matter Physics*" edited by F. Bassani, J. Liedl, and P. Wyder (Elsevier, Amsterdam, Netherlands, September 2005)
222. Y. Xi, T. Gessmann, J.-Q. Xi, J. K. Kim, J. M. Shah, E. F. Schubert, A. J. Fischer, M. H. Crawford, K. H. A. Bogart, A. A. Allerman "Junction temperature in ultraviolet light-emitting diodes" Special Issue on Ultraviolet Semiconductor Sources, *Japanese Journal of Applied Physics* **44**, 7260 (October 2005)
223. J.-Q. Xi, J. K. Kim, and E. F. Schubert "Low-refractive-index material with oblique-angle deposition" *LEOS Newsletter* Vol. **19** No. 6, page 10 (December 2005)
224. (**Invited**) E. F. Schubert, T. Gessmann, and J. K. Kim, "Inorganic semiconductors for light-emitting diodes" in *Organic Light-Emitting Devices, Synthesis, Properties, and Applications* edited by K. Müllen and U. Scherf, ISBN 3-527-31218-8 (Wiley VCH, New York, USA, 2006)
225. (**Invited**) E. F. Schubert, J. K. Kim, J.-Q. Xi, and H. Luo "Innovations in Light-emitting devices" in *The Physics of Semiconductor Devices* edited by V. Kumar, S. K. Agarwal, and S. N. Singh (Allied Publishers PVT. Limited, New Delhi, India, 2005)
226. J. K. Kim, J.-Q. Xi, H. Luo, J. Cho, C. Sone, Y. Park, and E. F. Schubert "Enhancement of light extraction in GaN light-emitting diodes by omnidirectional reflectors with ITO nanorod low-refractive-index layer" *Proceedings SPIE, Illumination Engineering, Fifth International Conference on Solid-State Lighting*, Vol. **5941**, page 5941 0K-1 – 6 (2005)

2006

227. J. K. Kim, T. Gessmann, E. F. Schubert, J.-Q. Xi, H. Luo, J. Cho, C. Sone, Y. Park "GaInN light-emitting diode with conductive omnidirectional reflector having a low-refractive index indium-tin oxide (ITO) layer" *Applied Physics Letters* **88**, 013501 (January 2006)
228. J. K. Kim, H. Luo, Y. Xi, J. M. Shah, T. Gessmann, and E. F. Schubert "Light extraction in GaInN light-emitting diodes using diffuse omnidirectional reflectors" *Journal of the Electrochemical Society* **153**, G105 (January 2006)
229. (**Invited**) J. K. Kim, J.-Q. Xi, E. F Schubert "Omni-directional reflectors for light-emitting diodes" *Light-Emitting Diodes: Research, Manufacturing, and Applications X, Proceedings of SPIE* **6134**, 61340D-1 (January 2006)
230. J. K. Kim, J.-Q. Xi, H. Luo, Jaehee Cho, Cheolsoo Sone, Yongjo Park, T. Gessmann, John M. Zavada, H. X. Jiang, and E. F Schubert, "GaN light-emitting triodes (LETs) for high-efficiency hole-injection and light emission" *Light-Emitting Diodes: Research, Manufacturing, and Applications X, Proceedings of SPIE* **6134**, 61340K-1 (January 2006)
231. J.-Q. Xi, J. K. Kim, E. F. Schubert, D. Ye, T.-M. Lu, S.-Y. Lin, and J. S. Juneja "Very low-refractive-index optical thin films consisting of an array of SiO_2 nanorods" *Optics Letters* **31**, 601 (March, 2006)
232. J. M. Shah, T. Gessmann, H. Luo, Y. Xi, K. Chen, J. K. Kim, and E. F. Schubert "Reduction of base access resistance in AlGaN/GaN heterojunction bipolar transistors using GaInN base cap layer and selective epitaxial growth" *Materials Research Society (MRS) Symposium Proceedings* Vol. **892**, page 0892-FF13-10.1 (March 2006)
233. F. Shahedipour-Sandvik, E. F. Schubert, B. K. Crone, H. Liu, Y-K. Su (editors) "Solid-State Lighting Materials and Devices" Symposium DD *Materials Research Society (MRS) Proceedings Volume 916* (May 2006)
234. C. W. Litton, D. Johnstone, S. Akarca-Biyikli, K. S. Ramaiah, I. Bhat, T. P. Chow, J. K. Kim, and E. F. Schubert "Effect of C/Si ratio on deep levels in epitaxial 4H–SiC" *Applied Physics Letters* **88**, 121914 (April 2006)
235. J. K. Kim, E. F. Schubert, Jaehee Cho, Cheolsoo Sone, J. Y. Lin, H. X. Jiang, and John M. Zavada "GaN light-emitting triode (LET) for high-efficiency hole injection" *Journal of The Electrochemical Society* **153**, G734 (June 2006)
236. (**Book**) E. F. Schubert "Light-emitting diodes, second edition" 422 pages, 255 line diagrams, 32 half-tones, 30 exercises, 287 figures, Hardback ISBN-13: 9780521865388 (Cambridge University Press, Cambridge UK, June 2006)
237. H. Luo, J. K. Kim, Y. A. Xi, E. F. Schubert, J. Cho, C. Sone, and Y. Park "Trapped whispering-gallery optical modes in white light-emitting diode lamps with remote phosphor" *Applied Physics Letters* **89**, 041125 (July 2006)

Pictiva EX2016
Samsung v Pictiva
IPR2024-01095

238. Y. Andrew Xi, Xiaolu Li, J. K. Kim, F. Mont, T. Gessmann, Hong Luo, and E. F Schubert "Quantitative assessment of diffusivity and specularity of surface-textured reflectors for light extraction in light-emitting diodes" *Journal of Vacuum Science and Technology* **A 24**, 1627 (July 2006)
239. Y. A. Xi, K. X. Chen, F. Mont, J. K. Kim, C. Wetzel, E. F. Schubert, W. Liu, X. Li, and J. A. Smart "Very high quality AlN grown on (0001) sapphire by metal-organic vapor phase epitaxy" *Applied Physics Letters* **89**, 103106 (September 2006)
240. J. K. Kim, J.-Q. Xi, H. Luo, Schubert E. F., Jaehee Cho, Cheolsoo Sone and Yongjo Park "Enhanced light-extraction in GaInN near-ultraviolet light-emitting diode with Al-based omnidirectional reflector having NiZn/Ag microcontacts" *Applied Physics Letters* **89**, 141123 (October 2006)
241. J.-Q. Xi, Luo Hong, A.J. Pasquale, Jong Kyu Kim, and E. F Schubert "Enhanced light extraction in GaInN light-emitting diode with pyramid reflector" *IEEE Photonics Technology Letters* **18***,* 2347 (November 2006)
242. (**Invited**) E. F. Schubert, J. K. Kim, H. Luo, and J.-Q. Xi "Solid-state lighting – A benevolent technology" *Reports on Progress in Physics* **69**, 3069 (November 2006)

2007

243. Frank W. Mont, J. K. Kim, M. F. Schubert, H. Luo, E. F. Schubert, and R. W. Siegel "High refractive index nanoparticle-loaded encapsulants for light-emitting diodes" *Proceedings SPIE* **6486**, 64861C (February 2007)
244. F. W. Mont, H. Luo, M. F. Schubert, J. K. Kim, E. F. Schubert, and R. W. Siegel, "Nanoparticle-loaded encapsulation materials for light-emitting diode applications" *Materials Research Society Symposium Proceedings* **955**, I13-02 (January 2007)
245. J.-Q. Xi, Hong Luo, Jong Kyu Kim, and E. F. Schubert "High light-extraction efficiency in GaInN light-emitting diode with pyramid reflector" *SPIE Photonics West*, *Proceedings SPIE* **6486**, 648606, San Jose, CA, January 20 – 25 (January 2007)
246. Y. Andrew Xi, K. X. Chen, F. W. Mont, J. K. Kim, W. Lee, E. F. Schubert, W. Liu, X. Li, and J. A. Smart "Kinetic study of Al-mole fraction in $Al_xGa_{1-x}N$ grown on c-plane sapphire and AlN bulk substrates by metal-organic vapor-phase epitaxy" *Applied Physics Letters* **90**, 051104 (January 2007)
247. Y. Andrew Xi, K. X. Chen, F. Mont, J. K. Kim, E. F. Schubert, W. Liu, X. Li, J. A. Smart "Comparative study of n-type AlGaN grown on sapphire by using a superlattice layer and a low-temperature AlN interlayer" *Journal of Crystal Growth* **299**, 59–62 (January 2007)
248. J.-Q. Xi, Martin F. Schubert, J. K. Kim, E. Fred Schubert, Minfeng Chen, Shawn-Yu Lin, Wayne Liu, and Joe A. Smart "Optical thin-film materials with low refractive index for broadband elimination of Fresnel reflection" *Nature Photonics* **1**, 176 (March 2007)
249. Martin. F. Schubert, J.-Q. Xi, J. K. Kim, and E. F Schubert "Distributed Bragg reflector consisting of high- and low-refractive-index thin film layers made of the same material" *Applied Physics Letters* **90**, 141115 (April 2007)
250. Y. Andrew Xi, K. X. Chen, F. W. Mont, J. K. Kim, E. F. Schubert, C. Wetzel, W. Liu, X. Li, and J. A. Smart "Optimization of high-quality AlN epitaxially grown on (0001) sapphire by metal-organic vapor-phase epitaxy" *Journal of Electronic Materials* (Special Issue) **36**, 533 (DOI: 10.1007/s11664-007-0099-3) (May 2007)
251. Kaixuan X. Chen, Y. A. Xi, F. W. Mont, J. K. Kim, E. F. Schubert, W. Liu, X. Li, and J. A. Smart "Recombination dynamics in ultraviolet light-emitting diodes with Si-doped $Al_xGa_{1-x}N/Al_yGa_{1-y}N$ multiple quantum well active regions" *Journal of Applied Physics* **101**, 113102 (June 2007)
252. Martin F. Schubert, Sameer Chhajed, Jong Kyu Kim, E. Fred Schubert, and Jaehee Cho "Polarization of light emission by 460 nm GaInN/GaN light-emitting diodes grown on (0001) oriented sapphire substrates" *Applied Physics Letters* **91**, 051117 (August 2007)
253. Martin F. Schubert, Ahmed Noemaun, Sameer Chhajed, Jong Kyu Kim, E. Fred Schubert, and Cheolsoo Sone "Encapsulation shape with non-rotational symmetry designed for extraction of polarized light from unpolarized sources" *Optics Express* **15***,* 10452 (August 2007)
254. (**Invited**) E. Fred Schubert and Jong Kyu Kim "Low-refractive index materials: A new class of optical thin-film materials" *Physica Status Solidi B* **244**, 3002 (DOI: 10.1002/pssb.200675603) (August 2007)
255. Kaixuan X. Chen, Q. Dai, W. Lee, J. K. Kim, E. F. Schubert, W. Liu, S. Wu, X. Li, and J. A. Smart "Parasitic sub-band-gap emission originating from compensating native defects in Si doped AlGaN" *Applied Physics Letters* **91**, 121110 (September 2007)
256. Martin F. Schubert, Sameer Chhajed, Jong Kyu Kim, E. Fred Schubert, and Jaehee Cho "Linearly polarized emission from GaInN light-emitting diodes with polarization-enhancing reflector" *Optics Express* **15**, 11213 (September 2007)
257. (**Invited**) E. F. Schubert, J. K. Kim, and J.-Q. Xi "Light-emitting diodes hit the centenary milestone" *Compound Semiconductors* October issue, page 20–23 (October 2007)

Pictiva EX2016
Samsung v Pictiva
IPR2024-01095

258. Min-Ho Kim, Martin F. Schubert, Qi Dai, Jong Kyu Kim, E. Fred Schubert, Joachim Piprek, and Yongjo Park "Origin of efficiency droop in GaN-based light-emitting diodes" *Applied Physics Letters* **91**, 183507 (October 2007)
259. Martin F. Schubert, Sameer Chhajed, Jong Kyu Kim, E. Fred Schubert, Daniel D. Koleske, Mary H. Crawford, Stephen R. Lee, Arthur J. Fischer, Gerald Thaler "Effect of dislocation density on efficiency droop in GaInN/GaN light-emitting diodes" *Applied Physics Letters* **91**, 231114 (December 2007)

2008

260. Jong Kyu Kim, S. Chhajed, M. F. Schubert, E. F. Schubert, A. J. Fischer, M. H. Crawford, J. Cho, H. Kim, and C. Sone "Light-extraction enhancement of GaInN light-emitting diodes by graded-refractive-index indium tin oxide anti-reflection contact" *Advanced Materials* **20**, 801 (March 2008)
261. Frank W. Mont, Jong Kyu Kim, Martin F. Schubert, E. Fred Schubert, and Richard W. Siegel "High-refractive-index TiO_2-nanoparticle-loaded encapsulants for light-emitting diodes" *Journal of Applied Physics* **103**, 083120 (April 2008)
262. Martin F. Schubert, Frank W. Mont, Sameer Chhajed, David J. Poxson, Jong Kyu Kim, and E. Fred Schubert "Design of multilayer antireflection coatings made from co-sputtered and low-refractive-index materials by genetic algorithm" *Optics Express* Vol. **16**, 5290 (April 2008)
263. Martin F. Schubert, Jiuru Xu, Jong Kyu Kim, E. Fred Schubert, Min Ho Kim, Sukho Yoon, Soo Min Lee, Cheolsoo Sone, Tan Sakong, and Yongjo Park "Polarization-matched GaInN/AlGaInN multi-quantum-well light-emitting diodes with reduced efficiency droop" *Applied Physics Letters* **93**, 041102 (July 2008)
264. David J. Poxson, Frank W. Mont, Martin F. Schubert, Jong Kyu Kim, and E. Fred Schubert "Quantification of porosity and deposition rate of nano-porous films grown by oblique-angle deposition" *Applied Physics Letters* **93**, 101914 (September 2008)
265. Mei-Ling Kuo, David J. Poxson, Yong Sung Kim, Frank W. Mont, Jong Kyu Kim, E. Fred Schubert, and Shawn-Yu Lin "Realization of a near-perfect antireflection coating for silicon solar energy utilization" *Optics Letters* **33**, 2527 (October 2008)
266. Jong Kyu Kim, Ahmed N. Noemaun, Frank W. Mont, David Meyaard, E. Fred Schubert, David J. Poxson, Hyunsoo Kim, Cheolsoo Sone, and Yongjo Park "Elimination of total internal reflection in GaInN light-emitting diodes by graded-refractive-index micropillars" *Applied Physics Letters* **93**, 221111 (November 2008)
267. Sameer Chhajed, Martin F. Schubert, Jong Kyu Kim, and E. Fred Schubert "Nanostructured multilayer graded-index antireflection coating for Si solar cells with broadband and omnidirectional characteristics" *Applied Physics Letters* **93**, 251108 (November 2008)
268. K. X. Chen, Q. Dai, W. Lee, J. K. Kim, E. F. Schubert, J. Grandusky, M. Mendrick, X. Li, and J. A. Smart "Effect of dislocations on electrical and optical properties of n-type $Al_{0.34}Ga_{0.66}N$" *Applied Physics Letters* **93**, 192108 (November 2008)
269. Jong Kyu Kim and E. Fred Schubert "Transcending the replacement paradigm of solid-state lighting" *Optics Express* **16**, 21835 (December 2008)

2009

270. Jiuru Xu, Martin F. Schubert, Ahmed N. Noemaun, Di Zhu, Jong Kyu Kim, E. Fred Schubert, Min Ho Kim, Hun Jae Chung, Sukho Yoon, Cheolsoo Sone, and Yongjo Park "Reduction in efficiency droop, forward voltage, ideality factor, and wavelength shift in polarization-matched GaInN/GaInN multi-quantum-well light-emitting diodes" *Applied Physics Letters* **94**, 011113 (January 2009)
271. Di Zhu, Jiuru Xu, Ahmed N. Noemaun, Jong Kyu Kim, E. Fred Schubert, Mary H. Crawford, and Daniel D. Koleske, "The origin of the high diode-ideality factors in GaInN/GaN multiple quantum well light-emitting diodes" *Applied Physics Letters* **94**, 081113 (February 2009)
272. Martin F. Schubert, Jiuru Xu, Qi Dai, Frank W. Mont, Jong Kyu Kim, and E. Fred Schubert "On resonant optical excitation and carrier escape in GaInN/GaN quantum wells" *Applied Physics Letters* **94**, 081114 (February 2009)
273. Qi Dai, M. F. Schubert, M. H. Kim, J. K. Kim, E. F. Schubert, D. D. Koleske, M. H. Crawford, S. R. Lee, A. J. Fischer, G. Thaler, and M. A. Banas "Internal quantum efficiency and nonradiative recombination coefficient of GaInN / GaN multiple quantum wells with different dislocation densities" *Applied Physics Letters* **94**, 111109 (March 2009)
274. David J. Poxson, Martin F. Schubert, Frank W. Mont, E. F. Schubert, and Jong Kyu Kim "Broadband omnidirectional antireflection coatings optimized by genetic algorithm" *Optics Letters* **34**, 728 (March 2009)
275. Roya Mirhosseini, Martin F. Schubert, Sameer Chhajed, Jaehee Cho, Jong Kyu Kim, and E. Fred Schubert "Improved color rendering and luminous efficacy in phosphor-converted white light-emitting diodes by use of dual-blue emitting active regions" *Optics Express* **17**, 10806 (June 2009)

Pictiva EX2016
Samsung v Pictiva
IPR2024-01095

276. Martin F. Schubert, Qi Dai, Jiuru Xu, Jong Kyu Kim, and E. Fred Schubert "Electroluminescence induced by photoluminescence excitation in GaInN/GaN light-emitting diodes" *Applied Physics Letters* **95**, 191105 (November 2009)
277. Jong Kyu Kim and E. Fred Schubert "Enhancement in light-extraction efficiency of GaN-based light-emitting diodes" in *Advanced Semiconductor Materials and Devices Research: III-Nitrides and SiC*; edited by H-Y Cha (Transworld Research Network, Kerala, India, 2009)

2010

278. J. Cho, A. Mao, J. K. Kim, J. K. Son, Y. Park and E. F. Schubert "Analysis of reverse tunneling current in GaInN light-emitting diodes" *Electronics Letters* **46**, 156 (January 2010)
279. M. Ojha, A. Chatterjee, F. Mont, E. F. Schubert, P. C. Wayner Jr., and J. L. Plawsky "The role of solid surface structure on dropwise phase change processes" *International Journal of Heat and Mass Transfer* **53**, 910 (February 2010)
280. Wonseok Lee, Min-Ho Kim, Di Zhu, Ahmed N. Noemaun, Jong Kyu Kim, and E. F. Schubert "Growth and characteristics of GaInN/GaInN multiple quantum well light-emitting diodes" *Journal of Applied Physics* **107**, 063102 (March 2010)
281. Di Zhu, Ahmed N. Noemaun, Martin F. Schubert, Jaehee Cho, E. Fred Schubert, Mary H. Crawford, and Daniel D. Koleske "Enhanced electron capture and symmetrized carrier distribution in GaInN light-emitting diodes having tailored barrier doping" *Applied Physics Letters* **96**, 121110 (March 2010)
282. Martin F. Schubert and E. Fred Schubert "Effect of heterointerface polarization charges and well width upon capture and dwell time for electrons and holes above GaInN/GaN quantum wells" *Applied Physics Letters* **96**, 131102 (March 2010)
283. Martin F. Schubert, David J. Poxson, Frank W. Mont, and E. Fred Schubert "Performance of anti-reflection coatings consisting of multiple discrete layers and comparison with continuously graded anti-reflection coatings" *Applied Physics Express* **3**, 082502 (August 2010)
284. Ming Ma, Frank W. Mont, David J. Poxson, Jaehee Cho, E. Fred Schubert, Roger E. Welser, and Ashok K. Sood "Enhancement of photovoltaic cell response due to high-refractive-index encapsulants" *Journal of Applied Physics* **108**, 043102 (August 2010)
285. Qi Dai, Qifeng Shan, Jing Wang, Sameer Chhajed, Jaehee Cho, E. Fred Schubert, Mary H. Crawford, Daniel D. Koleske, Min-Ho Kim, and Yongjo Park "Carrier recombination mechanisms and efficiency droop in GaInN/GaN light-emitting diodes" *Applied Physics Letters* **97**, 133507 (September 2010)
286. David J. Poxson, Frank W. Mont, Martin F. Schubert, Jong Kyu Kim, Jaehee Cho, and E. Fred Schubert "Demonstration of optical interference filters utilizing tunable refractive index layers" *Optics Express* **18**, A594 (October 2010)
287. Qifeng Shan, Qi Dai, Sameer Chhajed, Jaehee Cho, and E. Fred Schubert "Analysis of thermal properties of GaInN light-emitting diodes and laser diodes" *Journal of Applied Physics* **108**, 084504 (October 2010)

2011

288. Ann Mao, Jaehee Cho, Qi Dai, and E. Fred Schubert, Joong Kon Son, and Yongjo Park "Characteristics of dot-like green satellite emission in GaInN light-emitting diodes" *Applied Physics Letters* **98**, 023503 (January 2011)
289. Sameer Chhajed, Jaehee Cho, E. Fred Schubert, Jong Kyu Kim, Daniel D. Koleske, and Mary H. Crawford "Temperature-dependent light-output characteristics of GaInN light-emitting diodes with different dislocation densities" *Physica Status Solidi (A)* **208**, 947 (January 2011)
290. Qi Dai, Qifeng Shan, Jaehee Cho, E. Fred Schubert, Mary H. Crawford, Daniel D. Koleske, Min-Ho Kim, and Yongjo Park "On the symmetry of efficiency-versus-carrier-concentration curves in GaInN/GaN light-emitting diodes and relation to droop-causing mechanisms" *Applied Physics Letters* **98**, 033506 (January 2011)
291. Sameer Chhajed, Wonseok Lee, Jaehee Cho, E. Fred Schubert, and Jong Kyu Kim "Strong light-extraction enhancement in GaInN light-emitting diodes by using self-organized nanoscale patterning of p-type GaN" *Applied Physics Letters* **98**, 071102 (February 2011)
292. Roger E. Welser, Adam W. Sood, Ashok K. Sood, David J. Poxson, Sameer Chhajed, Jaehee Cho, E. Fred Schubert, Dennis L. Polla, and Nibir K. Dhar "Ultra-High Transmittance through Nanostructure-Coated Glass for Solar Cell Applications" *Proceedings of the SPIE* **8035**, 80350X (May 2011)
293. Xing Yan, Frank W. Mont, David J. Poxson, Jaehee Cho, E. Fred Schubert, Min-Ho Kim, and Cheolsoo Sone "Electrically conductive thin-film color filters made of single-material – indium-tin-oxide" *Journal of Applied Physics* **109**, 103113 (May 2011)

Pictiva EX2016
Samsung v Pictiva
IPR2024-01095

294. Sameer Chhajed, David J. Poxson, Xing Yan, Jaehee Cho, E. Fred Schubert, Roger E. Welser, Ashok K. Sood, and Jong Kyu Kim "Nanostructured Multilayer Tailored-Refractive-Index Antireflection Coating for Glass with Broadband and Omnidirectional Characteristics" *Applied Physics Express* **4**, 052503 (May 2011)
295. David J. Poxson, Mei-Ling Kuo, Frank W. Mont, Y.-S. Kim, Xing Yan, Roger E. Welser, Ashok K. Sood, Jaehee Cho, Shawn-Yu Lin, and E. Fred Schubert "High-performance anti-reflection coatings utilizing nanoporous layers" *MRS Bulletin* **36**, 434 (June 2011)
296. Guan-Bo Lin, Martin F. Schubert, Jaehee Cho (SID Member), E. Fred Schubert, Hyungkun Kim "A complementary matching technique to reduce the variance of optical and electrical properties of light-emitting diodes" *Journal of the SID* **19/6**, 431 (June 2011)
297. David S. Meyaard, Qifeng Shan, Qi Dai, Jaehee Cho, E. Fred Schubert, Min-Ho Kim, and Cheolsoo Sone "On the temperature dependence of electron leakage from the active region of GaInN/GaN light-emitting diodes" *Applied Physics Letters* **99**, 041112 (July 2011)
298. Ahmed N. Noemaun, Frank W. Mont, Guan-Bo Lin, Jaehee Cho, E. Fred Schubert, Gi Bum Kim, Cheolsoo Sone, and Jong Kyu Kim "Optically functional surface composed of patterned graded-refractive-index coatings to enhance light-extraction of GaInN light-emitting diodes" *Journal of Applied Physics* **110**, 054510 (September 2011)
299. Roger E. Welser, Gopal G. Pethuraja, Ashok K. Sood, Oleg A. Laboutin, Mark Chaplin, Van Un, Wayne Johnson, Adam W. Sood, David J. Poxson, Jaehee Cho, E. Fred Schubert, Pradeep Haldar, Jennifer L. Harvey "High voltage quantum well waveguide solar cells" *Proceedings of the SPIE* Vol. **8111**, page 81110I-1 (September 2011)
300. David S. Meyaard, Guan-Bo Lin, Qifeng Shan, Jaehee Cho, E. Fred Schubert, Hyunwook Shim, Min-Ho Kim, and Cheolsoo Sone "Asymmetry of carrier transport leading to efficiency droop in GaInN based light-emitting diodes" *Applied Physics Letters* **99**, 251115 (December 2011)
301. Qifeng Shan, David S. Meyaard, Qi Dai, Jaehee Cho, E. Fred Schubert, Joong Kon Son, and Cheolsoo Sone "Transport-mechanism analysis of the reverse leakage current in GaInN light-emitting diodes" *Applied Physics Letters* **99**, 253506 (December 2011)

2012

302. Di Zhu, Martin F. Schubert, Jaehee Cho, E. Fred Schubert, Mary H. Crawford, Daniel D. Koleske, Hyunwook Shim, and Cheolsoo Sone "Genetic algorithm for innovative device designs in high-efficiency III–V nitride light-emitting diodes" *Applied Physics Express* **5**, 012102 (January 2012)
303. David S. Meyaard, Qifeng Shan, Jaehee Cho, E. Fred Schubert, Sang-Heon Han, Min-Ho Kim, Cheolsoo Sone, Seung Jae Oh, and Jong Kyu Kim "Temperature dependent efficiency droop in GaInN light-emitting diodes with different current densities" *Applied Physics Letters* **100**, 081106 (February 2012)
304. Jong-In Shim, Dong-Pyo Han, Hyunsung Kim, Dong-Soo Shin, Guan-Bo Lin, David S. Meyaard, Qifeng Shan, Jaehee Cho, E. Fred Schubert, Hyunwook Shim, and Cheolsoo Sone "Efficiency droop in AlGaInP and GaInN light-emitting diodes" *Applied Physics Letters* **100**, 111106 (March 2012)
305. (**Invited**) Jaehee Cho and E. Fred Schubert "Light Emitting Diodes" in the *Encyclopedia of Optical Engineering* edited by R. G. Driggers and C. Hoffman (Taylor & Francis, New York, 2012)
306. Ashok K. Sood, Roger E. Welser, Adam W. Sood and Yash R. Puri, David Poxson, Jaehee Cho and E. Fred Schubert, Nibir K. Dhar, Martin B. Soprano, Raymond S. Balcerak "Development of nanostructure-based antireflection coatings for EO/IR sensors" *SPIE Photonics West Conference Proceedings*, Volume **8257**, paper 53 (April 2012)
307. Guan-Bo Lin, David Meyaard, Jaehee Cho, E. Fred Schubert, Hyunwook Shim, and Cheolsoo Sone "Analytic model for the efficiency droop in semiconductors with asymmetric carrier-transport properties based on drift-induced reduction of injection efficiency" *Applied Physics Letters* **100**, 161106 (April 2012)
308. Adam W. Sood, David J. Poxson, Frank W. Mont, Sameer Chhajed, Jaehee Cho, E. Fred Schubert, Roger E. Welser, Nibir K. Dhar, and Ashok K. Sood "Experimental and theoretical study of the optical and electrical properties of nanostructured indium tin oxide fabricated by oblique-angle deposition" *Journal of Nanoscience and Nanotechnology* **12**, 3950 (July 2012)
309. Ming Ma, Ahmed N. Noemaun, Jaehee Cho, E. Fred Schubert, Gi Bum Kim, and Cheolsoo Sone "Emission pattern control and polarized light emission through patterned graded-refractive-index coatings on GaInN light-emitting diodes" *Optics Express* **20**, 16677 (July 2012)
310. Ming Ma, David S. Meyaard, Qifeng Shan, Jaehee Cho, E. Fred Schubert, Gi Bum Kim, Min-Ho Kim, and Cheolsoo Sone "Polarized light emission from GaInN light-emitting diodes embedded with subwavelength aluminum wire-grid polarizers" *Applied Physics Letters* **101**, 061103 (August 2012)

Pictiva EX2016
Samsung v Pictiva
IPR2024-01095

311. Xing Yan, David J. Poxson, Jaehee Cho, Roger E. Welser, Ashok K. Sood, Jong Kyu Kim, and E. Fred Schubert "Enhanced omnidirectional photovoltaic performance of solar cells using multiple-discrete-layer tailored- and low-refractive index anti-reflection coatings" *Advanced Functional Materials* **2012**, 1 (September 2012)
312. Ming Ma, Jaehee Cho, E. Fred Schubert, Yongjo Park, Gi Bum Kim, and Cheolsoo Sone "Strong light-extraction enhancement in GaInN light-emitting diodes patterned with TiO_2 micro-pillars with tapered sidewalls" *Applied Physics Letters* **101**, 141105 (October 2012)

2013

313. Seung Jae Oh, Sameer Chhajed, David J. Poxson, Jaehee Cho, E. Fred Schubert, Sung Ju Tark, Donghwan Kim, and Jong Kyu Kim "Enhanced broadband and omni-directional performance of polycrystalline Si solar cells by using discrete multilayer antireflection coatings" *Optics Express* **21**, A157 (January 2013)
314. Jaehee Cho, E. Fred Schubert, and Jong Kyu Kim "Efficiency droop in light-emitting diodes: Challenges and countermeasures" *Laser and Photonics Reviews* 2012, **7**, 408 (January 2013)
315. David S. Meyaard, Guan-Bo Lin, Jaehee Cho, E. Fred Schubert, Hyunwook Shim, Sang-Heon Han, Min-Ho Kim, Cheolsoo Sone, and Young Sun Kim "Identifying the cause of the efficiency droop in GaInN light-emitting diodes by correlating the onset of high injection with the onset of the efficiency droop" *Applied Physics Letters* **102**, 251114 (June 2013)
316. Roger E. Welser, Adam W. Sood, Jaehee Cho, E. Fred Schubert, Jennifer L. Harvey, Nibir K. Dhar, Ashok K. Sood "Nanostructured Transparent Conductive Oxides for Photovoltaic Applications" *Materials Research Society Symposium Proceedings* **1493**, 23 (July 2013)
317. Seung Cheol Han, Jae-Kwan Kim, Jun Young Kim, Dong Min Lee, Jae-Sik Yoon, Jong-Kyu Kim, E. F. Schubert, and Ji-Myon Lee "Ohmic contacts to N-face p-type GaN using Ni/Au for the fabrication of polarization inverted light-emitting diodes" *Journal of Nanoscience and Nanotechnology* **13**, 5715 (August 2013)
318. Jun Hyuk Park, Dong Yeong Kim, Sunyong Hwang, David Meyaard, E. Fred Schubert, Yu Dae Han, Joo Won Choi, Jaehee Cho, Jong Kyu Kim "Enhanced overall efficiency of GaInN-based light-emitting diodes with reduced efficiency droop by Al-composition-graded AlGaN/GaN superlattice electron blocking layer" *Applied Physics Letters* **103**, 061104 (August 2013)
319. Seung Jae Oh, Gyeongmin Go, Jong-Lam Lee, E. Fred Schubert, Jaehee Cho, Jong Kyu Kim "Enhanced phosphor conversion efficiency of GaN-based white light-emitting diodes having dichroic-filtering contacts" *Journal of Materials Chemistry C*, **1**, 5733 (August 2013)
320. Guan-Bo Lin, Dong-Yeong Kim, Qifeng Shan, Jaehee Cho, E. Fred Schubert, Hyunwook Shim, Cheolsoo Sone, and Jong Kyu Kim "Effect of Quantum Barrier Thickness in the Multiple-Quantum-Well Active Region of GaInN / GaN Light-Emitting Diodes" *IEEE Photonics Journal* **5**, 1600207 (August 2013)
321. David S. Meyaard, Jaehee Cho, E. Fred Schubert, Sang-Heon Han, Min-Ho Kim, and Cheolsoo Sone "Analysis of the temperature dependence of the forward voltage characteristics of GaInN light-emitting diodes" *Applied Physics Letters* **103**, 121103 (September 2013)
322. David S. Meyaard, Guan-Bo Lin, Ming Ma, Jaehee Cho, E. Fred Schubert, Sang-Heon Han, Min-Ho Kim, HyunWook Shim, and Young Sun Kim "GaInN light-emitting diodes using separate epitaxial growth for the p-type region to attain polarization-inverted electron-blocking layer, reduced electron leakage, and improved hole injection" *Applied Physics Letters* **103**, 201112 (November 2013)
323. Ming Ma, Jaehee Cho, E. Fred Schubert, Gi Bum Kim, and Cheolsoo Sone "Optically functional surface structures for GaN-based light-emitting diodes" *Journal of Materials Chemistry C*, **1**, 8134 (November 2013)
324. Hee-Dong Kim, Ho-Myoung An, Kyoung Heon Kim, Su Jin Kim, Chi Sun Kim, Jaehee Cho, E. Fred Schubert, and Tae Geun Kim "A universal method of producing transparent electrodes using wide-bandgap materials" *Advanced Functional Materials* DOI: 10.1002/adfm.201301697 (November 2013)

2014

325. Hyunah Kwon, Juyoung Ham, Dong Yeong Kim, Seung Jae Oh, Subin Lee, Sang Ho Oh, E. Fred Schubert, Kyung-Geun Lim, Tae-Woo Lee, Sungjun Kim, Jong-Lam Lee, and Jong Kyu Kim "Organic Solar Cells: Three-dimensional nanostructured indium-tin-oxide electrodes for enhanced performance of bulk heterojunction organic solar cells" *Advanced Energy Materials* 1301566 (January 2014)
326. David S. Meyaard, Ming Ma, E. Fred Schubert, Chel-Jong Choi, Jaehee Cho, and Morgan Evans "Mesa-free III-V nitride light-emitting diodes with flat surface" *ECS Solid-State Letters* **3**, Q17 (February 2014)
327. Ming Ma, E. Fred Schubert, Jaehee Cho, Morgan Evans, Gi Bum Kim and Cheolsoo Sone "Fabrication of tapered graded-refractive-index micropillars using ion-implanted-photoresist as an etch mask" *Journal of Vacuum Science and Technology* A **32**, 021305-1 (March 2014)

Pictiva EX2016
Samsung v Pictiva
IPR2024-01095

328. Seung Hee Lee, Ho Jin, Dong-Yeong Kim, Kyung Song, Sang Ho Oh, Sungjee Kim, E. Fred Schubert, and Jong Kyu Kim "Enhanced power conversion efficiency of quantum dot sensitized solar cells with near single-crystalline TiO_2 nano-helixes used as photoanodes" *Optics Express* **22**, A868 (April 2014)
329. Seung Hee Lee, Jeong Kwon, Dong Yeong Kim, Kyung Song, Sang Ho Oh, Jaehee Cho, E. Fred Schubert, Jong Hyeok Park, Jong Kyu Kim "Enhanced power conversion efficiency of dye-sensitized solar cells with multifunctional photoanodes based on a three-dimensional TiO_2 nanohelix array" *Solar Energy Materials & Solar Cells* **132**, 47 (August 2014)
330. Michael E Coltrin, Andrew M Armstrong, Igal Brener, Weng W Chow, Mary H Crawford, Arthur J Fischer, David F Kelley, Daniel D Koleske, Lincoln J Lauhon, James E Martin, May D Nyman, E Fred Schubert, Lauren E Shea-Rohwer, Ganapathi S Subramania, Jeffrey Y Tsao, George T Wang, Jonathan J Wierer, Jr, Jeremy B Wright "The Energy Frontier Research Center for Solid-State Lighting Science: Exploring New Materials Architectures and Light Emission Phenomena" *The Journal of Physical Chemistry C* **118**, 13330 (April 2014)
331. Keith Goossen, Daniel Wolfe, E. Fred Schubert, Dan Kilper, and Ursula Keller "Negawatts – Optics, Photonics and Energy Savings" *Optics and Photonics News*, November issue, page 34, (November 2014)
332. Guan-Bo Lin, Qifeng Shan, Yaqi Wang, Ting Li, and E. Fred Schubert " "U-turn" feature in the efficiency-versus-current curve of GaInN / GaN light-emitting diodes" *Applied Physics Letters* **105**, 221116 (December 2014)

2015

333. Jaehee Cho, David S. Meyaard, Ming Ma, and E. Fred Schubert "GaInN-based light emitting diodes embedded with wire grid polarizers" *Japanese Journal of Applied Physics* **54**, 02BB02 (January 2015)
334. Dong Yeong Kim, Guan-Bo Lin, Sunyong Hwang, Jun Hyuk Park, David Meyaard, E. Fred Schubert, Han-Youl Ryu, and Jong Kyu Kim "Polarization-engineered high-efficiency GaInN light-emitting diodes optimized by genetic algorithm" *IEEE Photonics Journal* **7**, 1300209 (February 2015)
335. D. Y. Kim, J. H. Park, J. W. Lee, S. Y. Hwang, S. J. Oh, J. S. Kim, C. Sone, E. F. Schubert, and J. K. Kim (2015) "Overcoming the fundamental limitation in light-extraction efficiency of Deep-UV LEDs by utilizing transverse-magnetic-dominant emission" *Light: Science & Applications* **4***, e263;* doi:10.1038/lsa.2015.36 (May 2015)
336. Jun Hyuk Park, Guan-Bo Lin, Dong Yeong Kim, Jong Won Lee, Jaehee Cho, Jungsub Kim, Jinsub Lee, Yong-Il Kim, Youngsoo Park, E. Fred Schubert, and Jong Kyu Kim "Distinct U-shape efficiency-versus-current curves in AlGaN-based deep-ultraviolet light-emitting diodes" *Optics Express* **23**, 15398 (June 2015)
337. Ashok K. Sood, Gopal Pethuraja, Roger E. Welser and Yash R. Puri, Nibir K. Dhar, Priyalal S. Wijewarnasuriya, Jay Lewis, Harry Efstathiadis, Pradeep Haldar, and E. Fred Schubert "Development of large area nanostructured antireflection coatings for EO/IR sensor applications" *International Journal of NanoScience and Nanotechnology*, Volume **6**, Number 2, pp. 57-70 (August 2015)
338. Ashok K. Sood, Roger E. Welser, Gopal G. Pethuraja, Adam W. Sood, Yash R. Puri, E. Fred Schubert, Pradeep Haldar, Nibir K. Dhar, Dennis L. Polla, and Priyalal Wijewarnasuriya "Nanostructured anti-reflection (AR) coatings for optoelectronic applications" published in: *Comprehensive Guide for Nanocoatings Technology*, Volume **4**, Editor: Mahmood Aliofkhazraei, ISBN-13 978-1-63482-648-8 (Nova Science Publishers Inc., Hauppauge, New York, USA, November 2015)
339. E. Fred Schubert, Jaehee Cho, and Jong Kyu Kim "Light Emitting Diodes" published in: *Kirk-Othmer Encyclopedia of Chemical Technology*; on-line access at < http://onlinelibrary.wiley.com/book/10.1002/0471238961 > ISBN: 9780471238966 DOI: 10.1002/0471238961 (John Wiley and Sons and Wiley Inter-Science, New York NY, December 2015)
340. Guan-Bo Lin and E. Fred Schubert "Efficiency re-climbing in high-current droop regime for gallium-nitride-based light-emitting diodes" *International Journal of High-Speed Electronics and Systems*, *World Scientific Publishing Company* **24**, 1520008 (December 2015)
341. E. F. Schubert "Physical Foundations of Solid-State Devices" (author), eBook, 275 pages, 2015 Edition, ISBN-13: 978-0-9863826-2-8 (Google Books, Mountain View CA, 2015)

2016

342. E. Fred Schubert, Jaehee Cho, and Jong Kyu Kim "Light Emitting Diodes" published in: *Reference Module in Materials Science and Materials Engineering*, Section on Light Emitting Diodes, Materials Science and Materials Engineering, Edited by Saleem Hashmi (Elsevier Publishing Company, Amsterdam, 2016) < https://www.sciencedirect.com/science > (January 2016)
343. Kyurin Kim, Jun Hyuk Park, Hyunsoo Kim, Jong Kyu Kim, E. Fred Schubert, and Jaehee Cho "Energy bandgap variation in oblique angle-deposited indium tin oxide" *Applied Physics Letters* **108**, 041910 (January 2016)

Pictiva EX2016
Samsung v Pictiva
IPR2024-01095

344. Jun Hyuk Park, Jong Won Lee, Dong Yeong Kim, Jaehee Cho, E. Fred Schubert, Jungsub Kim, Jinsub Lee, Yong-Il Kim, Youngsoo Park, and Jong Kyu Kim "Variation of the external quantum efficiency with temperature and current density in red, blue, and deep ultraviolet light-emitting diodes" *Journal of Applied Physics* **119**, 023101 (January 2016)
345. JongWon Lee, Dong Yeong Kim, Jun Hyuk Park, E. Fred Schubert, Jungsub Kim, Jinsub Lee, Yong-Il Kim, Youngsoo Park, and Jong Kyu Kim "An elegant route to overcome fundamentally-limited light extraction in AlGaN deep-ultraviolet light-emitting diodes: Preferential outcoupling of strong in-plane emission" *Scientific Reports* **6**, 22537 (March 2016)

2017

346. Jaehee Cho, Jun Hyuk Park, Jong Kyu Kim, and E. Fred Schubert "White light-emitting diodes: History, progress, and future" *Laser and Photonics Review*, 1600147 (2017) / DOI 10.1002/lpor.201600147 (March 2017)
347. Jun Hyuk Park, Jaehee Cho, E. Fred Schubert, and Jong Kyu Kim "The effect of imbalanced carrier transport on the efficiency droop in GaInN-based blue and green light-emitting diodes" *Energies* **10**, 1277 (2017) DOI: 10.3390/en10091277 (August 2017)

2018

348. E. Fred Schubert "Light Emitting Diodes, 3rd Edition" Book, 672 pages, with hundreds of colored figures ISBN: 978-0-9 863826-6-6 (Google Books, Mountain View CA, 2018)
349. JH Park, DY Kim, EF Schubert, J Cho, JK Kim "Fundamental Limitations of Wide-Bandgap Semiconductors for Light-Emitting Diodes" *ACS Energy Letters* **3**, 655-662 (2018)

2020

350. Bhishma Pandit, E. Fred Schubert and Jaehee Cho "Dual-functional ultraviolet photodetector with graphene electrodes on AlGaN/GaN heterostructure" *Nature Research – Scientific Reports* **10**, 22059 (2020)

2022

351. E. F. Schubert "Physical Foundations of Solid-State Devices" (author), eBook, 318 pages, 2022 Edition, ISBN-13: 978-0-9863826-2-8 (Google Books, Mountain View CA, 2022)

2024

352. Yung Ryel Ryu, Sung Ki Hong, E Fred Schubert, Dong-Min Jeon, Dong-Soo Shin, Jong-In Shim, Sang-Mook Kim, Jong Hyeob Baek "A next-generation light-emitting device: ZOGAN LED with a heterogeneous p-layer composed of oxide and nitride semiconductors" *AIP Advances* (AIP Publishing), Volume **14**, Issue 4 (2024)

Pictiva EX2016
Samsung v Pictiva
IPR2024-01095