US006007086A

United States Patent [19]

Hopkins

[11] **Patent Number: 6,007,086**

[45] **Date of Patent: Dec. 28, 1999**

[54] **ELECTRIC SKI BINDING SYSTEM**

[76] Inventor: **Mark D. Hopkins**, 3252 American Saddler Dr., Park City, Utah 84060

[21] Appl. No.: **09/062,234**

[22] Filed: **Apr. 17, 1998**

Related U.S. Application Data

[60] Provisional application No. 60/044,614, Apr. 18, 1997.

[51] **Int. Cl.**[6] **A63C 9/08**

[52] **U.S. Cl.** **280/612**; 280/613; 280/632; 292/251.5

[58] **Field of Search** 280/612, 611, 280/613, 632, 623, 615; 307/119; 310/339; 292/251.5, 144

[56] **References Cited**

U.S. PATENT DOCUMENTS

3,318,610	5/1967	Kulick	280/11.35
3,667,771	6/1972	Larson	280/11.35 M
3,814,454	6/1974	Beyl	280/11.35 C
3,819,199	6/1974	Smolka et al.	280/11.35 M
3,927,897	12/1975	Olsen et al.	280/612
3,960,383	6/1976	O'Neil	280/612
4,004,824	1/1977	Svoboda	280/636
4,402,524	9/1983	D'Antonio et al.	280/612
4,460,195	7/1984	Bildner	280/612
4,465,294	8/1984	Spitaler et al.	280/612
4,484,761	11/1984	Knabel et al.	280/612
4,494,768	1/1985	Hull	280/612
4,563,021	1/1986	Klubitschko	280/612
4,576,396	3/1986	Stempfhuber	280/612
4,851,706	7/1989	D'Antonio	307/119
5,051,605	9/1991	D'Antonio et al.	307/116
5,150,913	9/1992	Hoelzl	280/612
5,188,387	2/1993	Ruffinengo	280/612
5,294,144	3/1994	Stepanek et al.	280/612
5,498,017	3/1996	Rohrmoser	280/612 X

Primary Examiner—Lanna Mai
Assistant Examiner—Hau V Phan
Attorney, Agent, or Firm—Madson & Metcalf

[57] **ABSTRACT**

An electric ski binding system with magnetic interfaces and a microprocessor achieves releasable engagement of a ski boot to ski bindings. A permanent magnet in the front ski binding and a permanent magnet of opposite polarity in the toe portion of the boot create a front magnetic interface. A permanent magnet in the rear ski binding and a permanent magnet of opposite polarity in the heel portion of the boot create a rear magnetic interface. Electromagnets in the proximity of the front and rear magnetic interfaces are disposed so that their polarity opposes the permanent magnets of the boot. The electromagnets are turned off while the boot is engaged with the ski binding to allow the permanent magnets to couple at the front and rear magnetic interfaces. The electromagnets are operated when disengaging the boot from the ski binding to create a magnetic field substantially greater than that of the permanent magnets in the front and rear magnetic interfaces.

Sensors are placed on the ski bindings to sense pressure and stress. The sensors relay signals indicative of applied pressure and stress to the microprocessor. The microprocessor evaluates the relayed signals to determine if an established threshold value is exceeded which is indicative of a release situation. In a release situation, the microprocessor effects operation of the front and rear electromagnets to repulse the boot from the ski bindings.

20 Claims, 7 Drawing Sheets

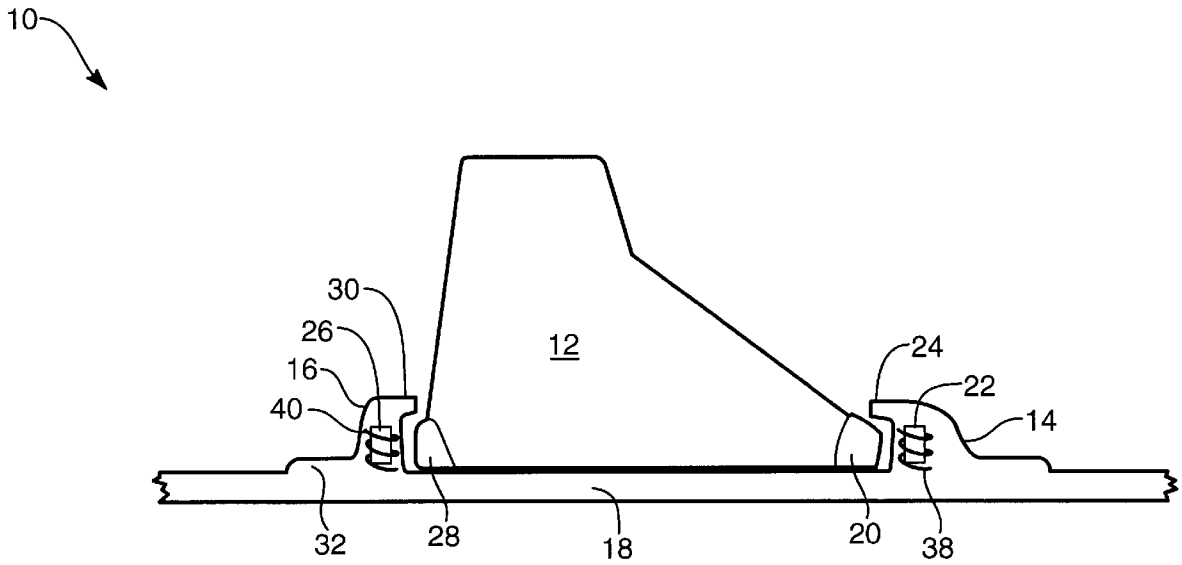

HEAD EXHIBIT 1017

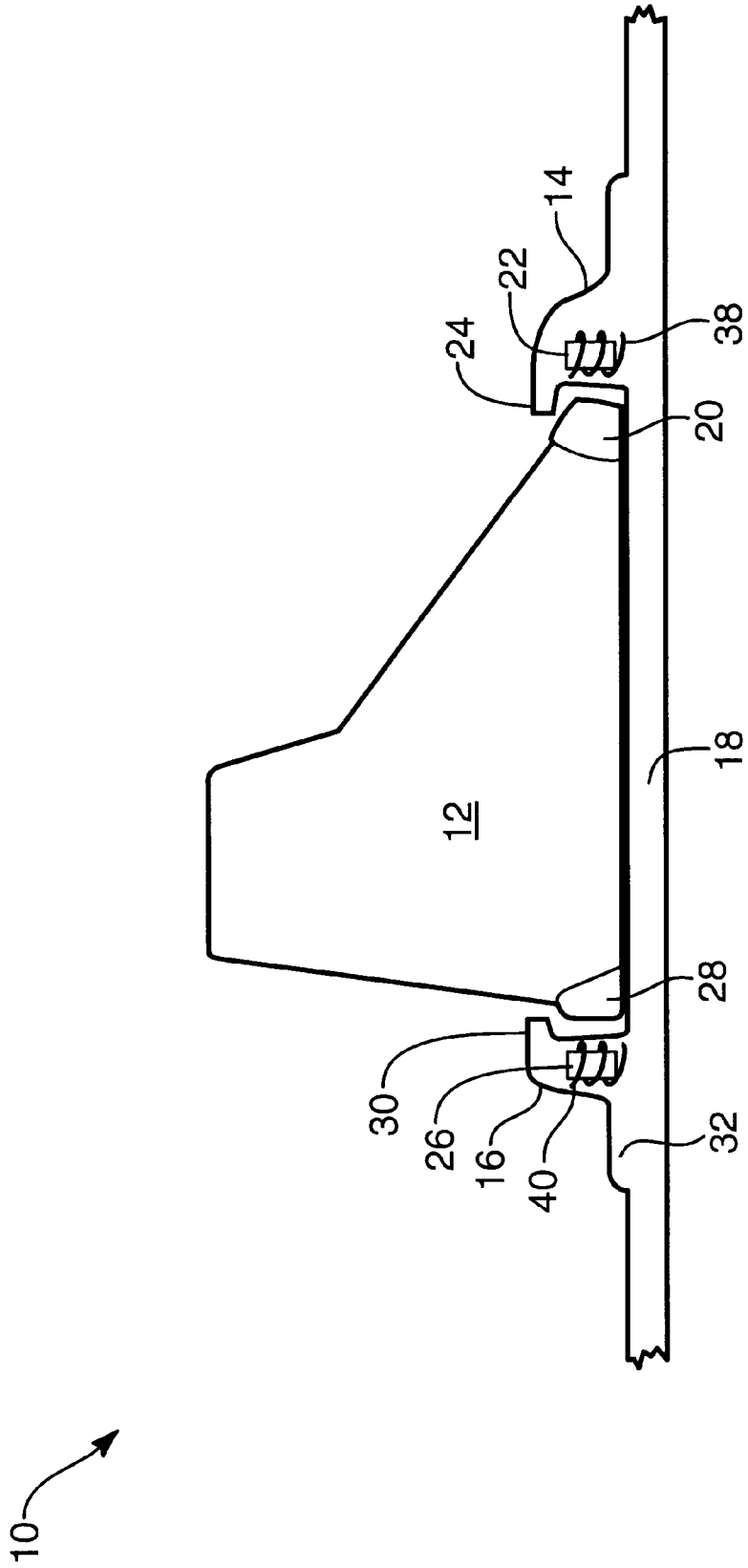

Fig. 1

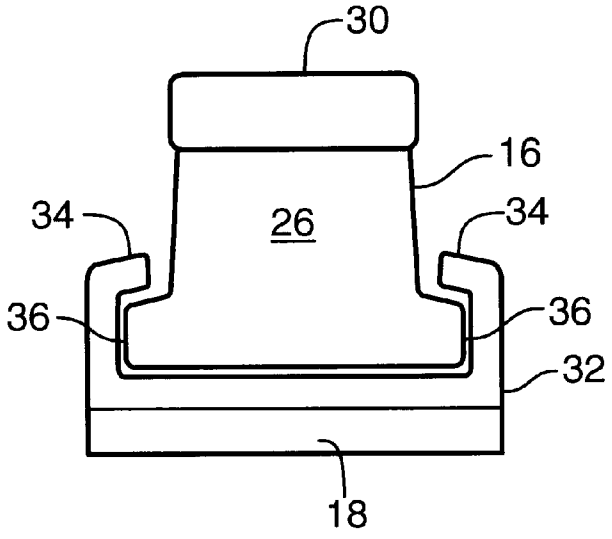

Fig. 2a

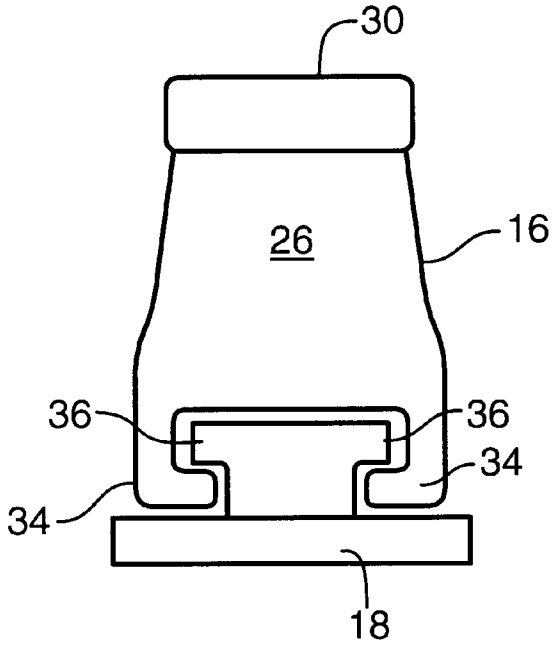

Fig. 2b

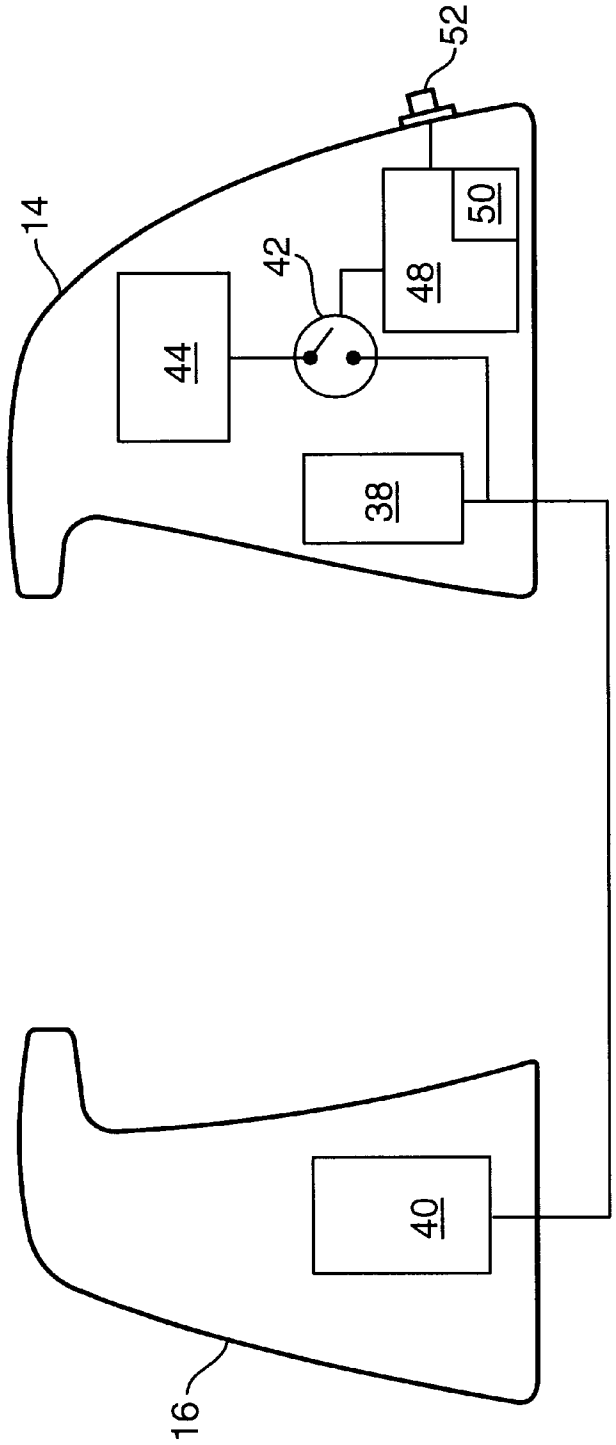

Fig. 3

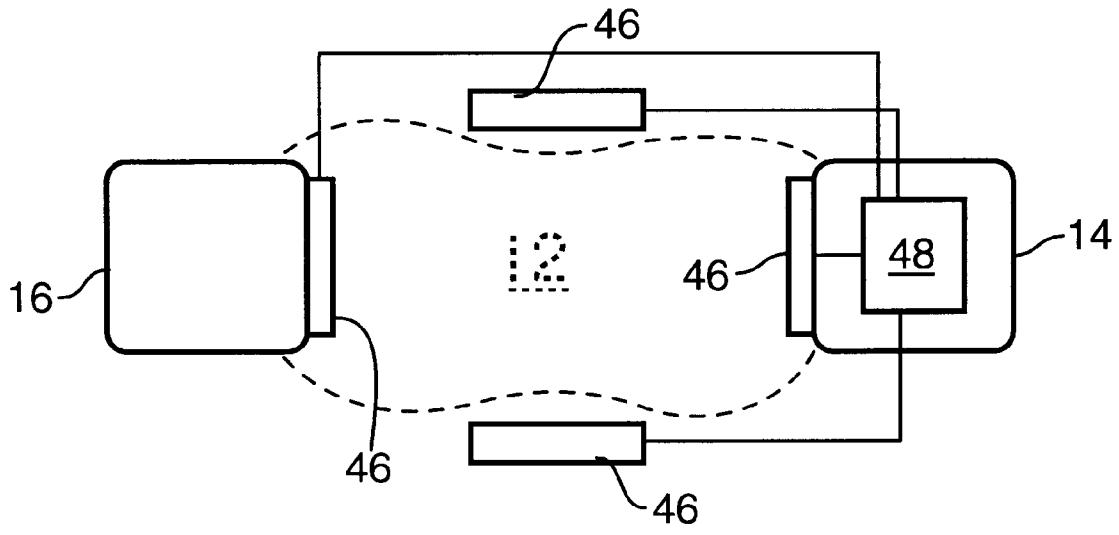

Fig. 4

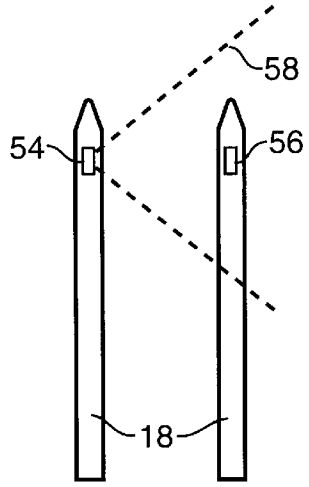

Fig. 5a

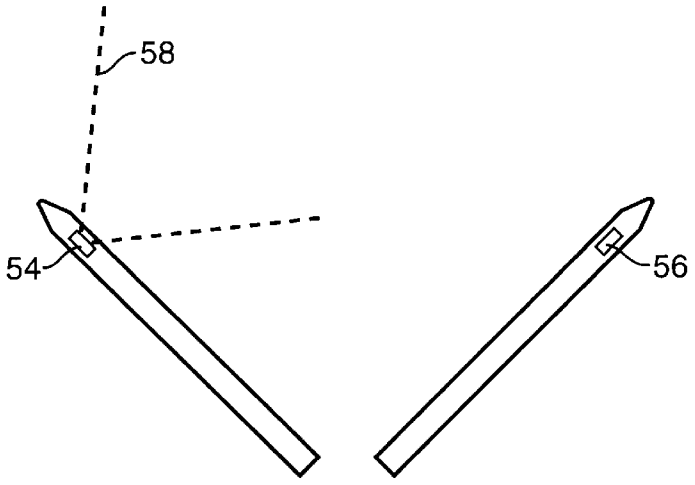

Fig. 5b

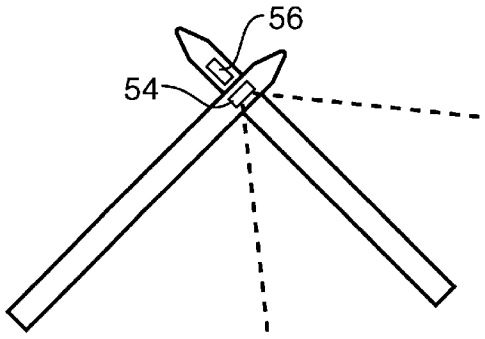

Fig. 5c

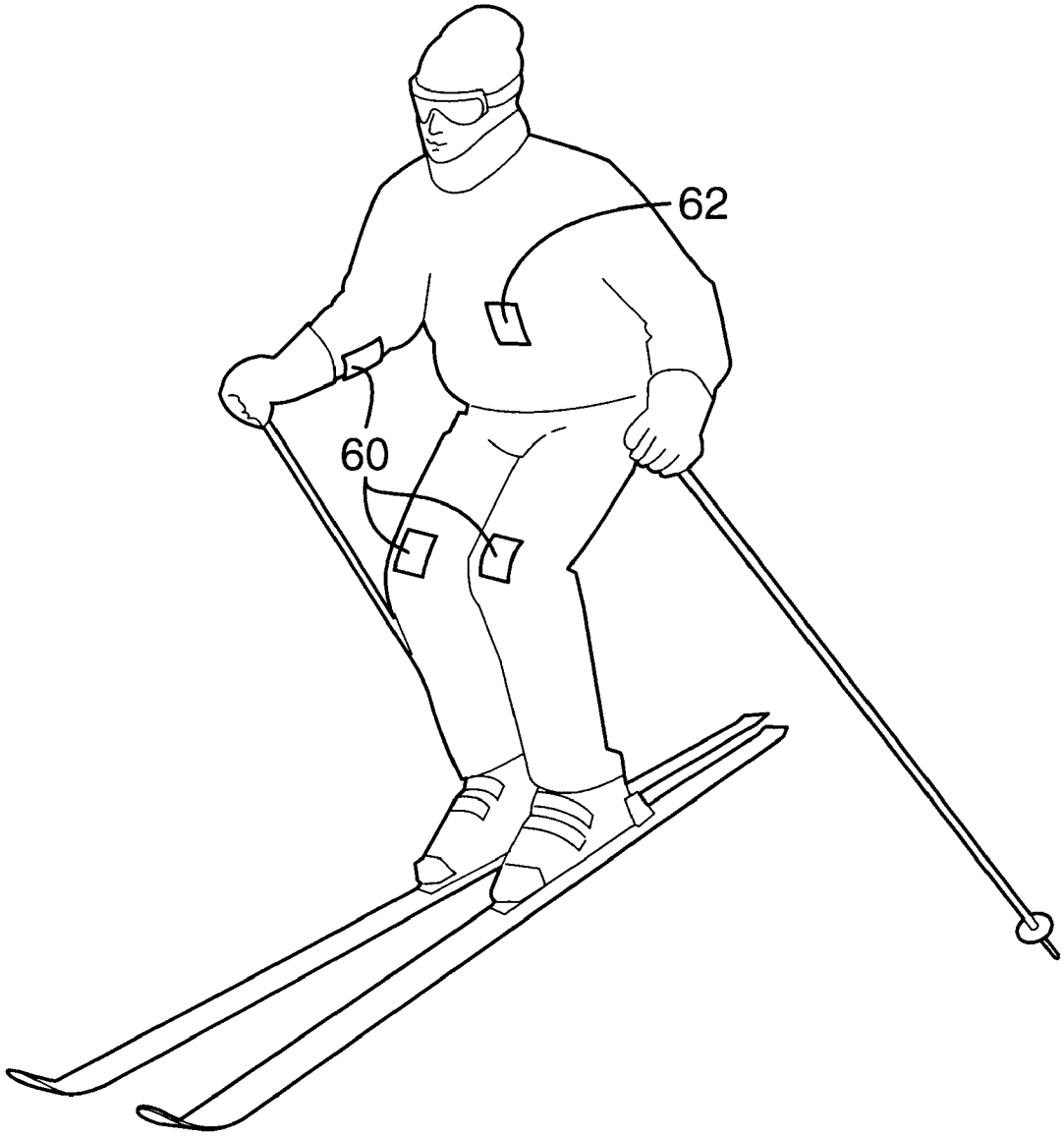

Fig. 6

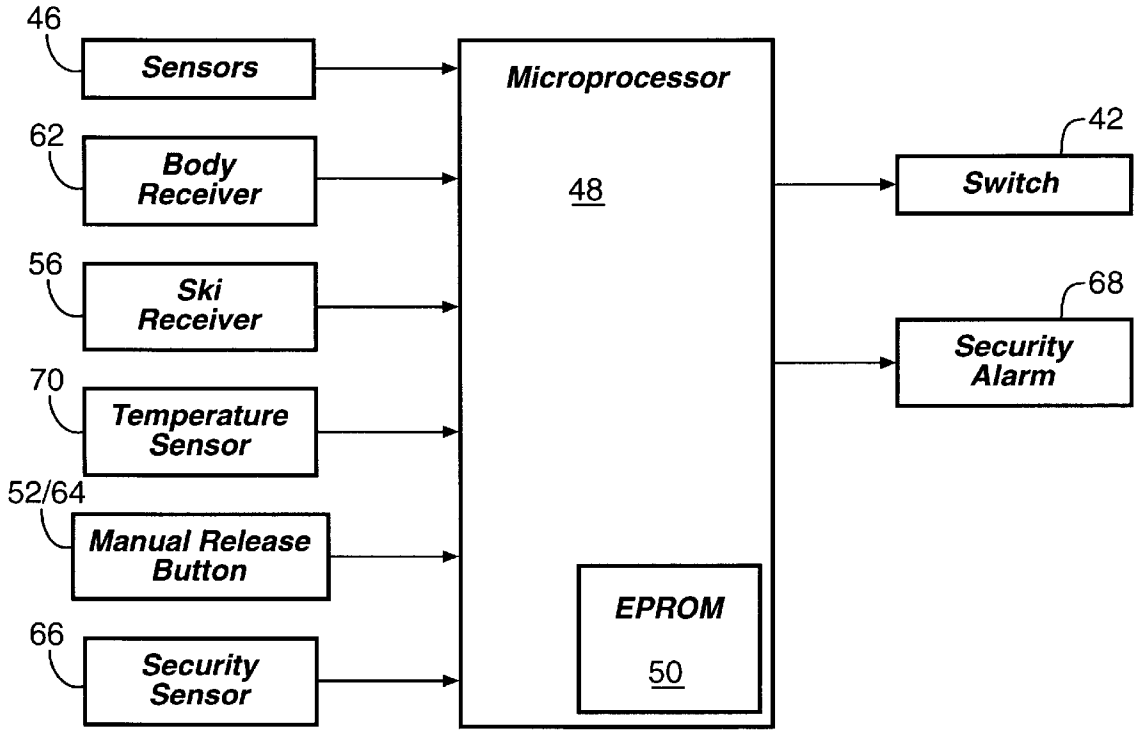
46
Sensors
62
Body Receiver
56
Ski Receiver
70
Temperature Sensor
52/64
Manual Release Button
66
Security Sensor
Microprocessor
48
EPROM
50
42
Switch
68
Security Alarm

Fig. 7

ELECTRIC SKI BINDING SYSTEM

RELATED APPLICATIONS

This application claims the benefit of U.S. Provisional Application No. 60/044,614 filed Apr. 18, 1997.

BACKGROUND

1. The Field of the Invention

The invention relates to an electromagnetic ski binding system. More specifically, the invention is directed towards an electromagnetic ski binding system with magnetic coupling and computer controlled magnetic release.

2. The Background Art

Ski bindings serve to releasably engage a skier's boot to a ski and provide a secure interface between boot and ski. Ski bindings further serve to release the boot from the ski when a potential injury situation occurs to thereby reduce injury to the skier. Ski bindings typically comprise a front and rear binding to secure the respective front and rear portions of the boot.

Conventional mechanical ski bindings incorporate mechanical components such as a clamping mechanism to secure the boot to the ski. Such mechanical ski bindings are designed to release when sufficient stress is applied to the binding as would be experienced in a potential injury situation. The amount of stress which effects release of the mechanical ski binding is adjustable to accommodate the experience and weight of the skier, terrain, and other conditions.

However, the mechanical ski bindings are limited in that they fail to release in a number of potential injury situations. In order for the mechanical ski bindings to release, the stress must be applied directly to the front ski binding or in the same plane as the ski. Often, stress applied to the rear binding or various torques applied to the boot and ski will fail to cause the bindings to release. Furthermore, when the mechanical ski bindings do release, the mechanical operation of the binding is sometimes not quick enough to avoid injury to the skier. Mechanical ski bindings are also heavy and include several moving parts making them unreliable and susceptible to breaking. Mechanical ski bindings may also fail to release if dirt, ice or snow impedes their performance. In addition, proper adjustment in the stress release of the mechanical ski bindings is sometimes difficult which can result in overly sensitive or overly resistive bindings. Finally, skiing is a cold weather sport and colder temperatures result in reduced performance of mechanical components.

Previous electric ski binding systems have been developed which utilize various electromagnetic, electronic, and electromechanical components. However, these ski binding systems are limited in that they incorporate various mechanical components and thereby include many of the previously described limitations of mechanical components. Thus, they do not always provide a quick enough release, are prone to failure, and can be difficult to adjust.

A further limitation on all previous ski bindings is that they fail to release during certain potential injury situations. As mentioned previously, certain tensions and torques applied to the ski and boot do not effect a release of the binding when a potential injury situation is clearly imminent. Furthermore, certain body positions and certain ski positions signal a potential injury situation, but conventional ski bindings will not be responsive to these positions and will not release.

From the foregoing it will be appreciated that it would be an advancement in the art to provide an improved ski binding system which would provide release response to a broader range of potential injury situations.

It would be a further advancement in the art to provide a ski binding system which allows a nearly instantaneous release of the boot from the binding to avoid undue injury.

It would also be an advancement in the art to provide a ski binding system which was more reliable, reduced the number of working parts, and allowed for accurate yet flexible adjustment specific to the skier.

Such a device is disclosed and claimed herein.

BRIEF SUMMARY

The invention provides an electronic ski binding system with magnetic interfaces to achieve releasable engagement of the boot to the binding and a microprocessor to control the releasable engagement. The invention comprises a front magnetic interface with a permanent magnet in the front ski binding and a permanent magnet of opposite polarity in the toe portion of the boot. Similarly, the invention further comprises a rear magnetic interface with a permanent magnet in the rear ski binding and a permanent magnet of opposite polarity in the heel portion of the boot. The front and rear magnetic interfaces have magnetic fields of sufficient strength to ensure engagement of the boot to the ski binding during normal ski conditions. Accordingly, engagement of the boot to the ski binding depends on the strength of the magnetic fields rather than mechanical means.

The invention further comprises electromagnets in the proximity of the front and rear magnetic interfaces. The electromagnets are disposed so that their polarity opposes the permanent magnets of the boot. The electromagnets are also in electric connection with a rechargeable power supply in the ski binding. The electromagnets are turned off while the boot is engaged with the ski binding which allows the permanent magnets to couple at the front and rear magnetic interfaces. To disengage the boot from the ski binding, the electromagnets are turned on briefly to create a magnetic field substantially greater than that of the permanent magnets in the front and rear magnetic interfaces. This results in a nearly instantaneous repulsion of the boot from the ski binding.

The combination of permanent magnets and electromagnets allows for ski bindings which nearly eliminates the need for any moving, mechanical parts. Furthermore, although mechanical parts do not perform as well in cold weather, magnets experience better performance in colder weather.

The invention further comprises a series of sensors which are placed on the ski bindings to sense pressure and stress. These sensors are in electrical communication with the microprocessor and output electrical signals to the microprocessor to convey the status of applied pressure and stress to the bindings. In one presently preferred embodiment, the sensors are placed in the front and rear bindings and to the left and right of the boot. The combination of sensors are able to more accurately reflect the pressure and stress that the boot is subject to than conventional mechanical ski bindings.

In one embodiment, a transmitter is placed in the forward portion of one ski and a receiver is placed in the forward portion of the other ski. The transmitter and receiver act in conjunction to indicate the relative position of the skis with respect to one another. Thus, a potential injury situation would be indicated if the skis become crossed or to far spread from one another. The receiver is in electrical com-

munication with the microprocessor and sends signals to the microprocessor which conveys the relative position of the skis.

In another embodiment, transmitters are fixed to different locations of the skier's body. For example, the transmitters would be placed in each limb of the skier. A receiver is fixed approximately in the torso of the skier. The transmitters and receiver act to indicate the relative position of the body. The receiver is in electrical communication with the microprocessor and sends signals indicating the position of the transmitters and receivers. If the receiver loses contact with the transmitters, this would indicate that the limbs are inappropriately positioned relative to the body and a potential injury is imminent.

The microprocessor may be located in either the ski bindings or the boot and is in electrical communication with the electromagnets to control their operation. The microprocessor is also in electrical communication with the sensors and receivers as previously mentioned. The microprocessor comprises a memory such as an EPROM and is programmed to process incoming signals from the sensors and the receivers. Based on its programmed parameters, the microprocessor determines if the skier is in a potential injury situation. The programmed parameters are based on a variety of possible factors including the skier's ability, the skier's weight, the terrain, the weather conditions, and so forth. Thus, if the signals from the sensors transmit data which exceeds a programmed threshold, a potential injury is indicated. Alternatively, the receivers may signal a body position which indicates that a potential injury situation is imminent. In a potential injury situation, the microprocessor activates the electromagnets which results in the nearly instantaneous release of the boot from the ski bindings, thereby preventing the injury.

A manual release is also provided and is in electrical communication with the microprocessor and signals the microprocessor to release the ski bindings. The skier may toggle the manual release when removal of the boot from the ski binding is desired.

Thus, it is an object of the invention to provide an electronic ski binding system which eliminates nearly all moving parts thereby provides nearly instantaneous, reliable release of the boot from the ski binding in potential injury situations.

It is a further object of the invention to provide an electronic ski binding system which releases based on programmable parameters which reflect a broad range of potential injury situations.

It is another object of the invention to enable individuals the ability to customize individual parameters which effect release of the ski bindings.

It is yet another object of the invention to provide an electronic ski binding system which provides superior performance in colder temperatures.

These advantages and others of the present invention will become more fully apparent by examination of the following description of the preferred embodiments and the accompanying drawings.

BRIEF DESCRIPTION OF THE DRAWINGS

In order that the manner in which the above-recited and other advantages and features of the invention are obtained, a more particular description of the invention summarized above will be rendered by reference to the appended drawings. Understanding that these drawings only provide selected embodiments of the invention and are not therefore to be considered limiting of its scope, the invention will be described and explained with additional specificity and detail through the use of the accompanying drawings in which:

FIG. **1** is a side view of the ski boot in position with the ski bindings;

FIG. **2***a* is a front view of the rear ski binding on a slidable track;

FIG. **2***b* is a front view of an alternative embodiment of the rear ski binding on a slidable track;

FIG. **3** is a block diagram of components contained in the front and rear ski bindings;

FIG. **4** is a block diagram of sensors placed in relationship with the front and rear ski bindings;

FIG. **5***a* is a plan view illustrating skis of the invention in a normal position;

FIG. **5***b* is a plan view illustrating skis of the invention in a "split" position;

FIG. **5***c* is a plan view illustrating skis of the invention in a "crossed" position;

FIG. **6** is a perspective view of the skier equipped with one embodiment of the system of the invention; and

FIG. **7** is a block diagram of the microprocessor in electrical communication with sensor and receiver components.

DETAILED DESCRIPTION OF THE PREFERRED EMBODIMENTS

Reference is now made to the embodiments and methods illustrated in FIGS. **1** through **4**. With reference to FIG. **1** there is shown a side view of the electric ski binding system **10**. The electric ski binding system **10** as shown comprises a boot **12** and front ski and rear ski bindings **14**, **16**. The front and rear ski bindings **14**, **16** are mounted to a conventional ski **18**. The boot **12** comprises a toe permanent magnet **20** in the toe portion of the boot **12**. The front ski binding **14** comprises a front permanent magnet **22** and is configured to conform to the toe portion of the boot **12**. When the boot **12** is inserted into the ski bindings **14**, **16** a front magnetic interface is created by the front permanent magnet **22** in the front ski binding **14** and the toe permanent magnet **20** in the toe portion of the boot **12**. The permanent magnets **20**, **22** are positioned so that opposing poles are facing one another during use to create an attractive magnetic field when in proximity to one another.

In one presently preferred embodiment, the front ski binding **14** has a ledge **24** which protrudes slightly rearward so that the toe of the boot fits under the ledge **24** in use. The ledge **24** may be primarily composed of the front permanent magnet **22** to provide additional surface area to ensure a stronger front magnetic interface between the front permanent magnet **22** and the toe permanent magnet **20**. The ledge **24** also facilitates guidance of the boot **12** into the front binding **14**. The magnetic field of the front magnetic interface is of sufficient strength to secure the toe of the boot **12** to the front binding **14** during normal use.

The invention further comprises a rear permanent magnet **26** in the rear binding **16** and a heel permanent magnet **28** in the heel portion of the boot **12**. As with the front binding **14**, the permanent magnets **26**, **28** are located so that their opposing poles are placed in proximity to one another during normal use to create an attractive magnetic field. In one presently preferred embodiment, the rear binding **16** has a ledge **30** slightly protruding forward over the heel perma-

nent magnet **28** to further secure the heel to the rear binding **16**. The magnetic field of the rear magnetic interface is also of sufficient strength to secure the heel of the boot to the rear binding **16** during normal use.

In one presently preferred embodiment, the rear binding **16** is placed on a slidable track **32** to allow the rear binding **16** to move slightly forward and rearward along the length of the ski **18**. Preferably, the rear binding **16** will be positioned rearward approximately ½ to ¾ of an inch before the boot **12** is inserted into the bindings **14, 16**. This allows the boot **12** to be inserted between the front and rear bindings **14, 16**. After insertion, the rear binding **16** slides forward to engage the heel portion of the boot **12** in a rear magnetic interface.

With reference to FIGS. **2**A and **2**B possible embodiments for the sliding track **32** are shown. In both embodiments, the sliding track **32** and the rear ski binding **16** are configured to interlock proximate with one another to accommodate slidable movement along the length of the ski **18**. In the embodiment of FIG. **2**A the slidable track **32** is configured with guide tracks **34** which extend around the rear ski binding **16** as shown. The rear ski binding **16** is configured with protrusions **36** to prevent removal of the rear ski binding **16**. The guide tracks **34** and the protrusions **36** maintain the proximate positioning of the rear ski binding **16** to the slidable track **32**.

In the embodiment of FIG. **2**B the rear ski binding **16** is configured with guide tracks **34** which extend around the slidable track **32**. The slidable track **32** is configured with protrusions **36** to provide an interlocking connection with the guide tracks **34** and maintain the proximate positioning of the slidable track **32** and the rear ski binding **16**.

In one embodiment, the slidable track **32** is coated with a TEFLON layer or other low friction material where it interfaces with the rear ski binding **16** to facilitate sliding.

In an alternative embodiment, a first sliding permanent magnet is disposed on the bottom surface of the rear ski binding **16**. A second sliding permanent magnet is disposed on the top surface of the sliding track **32** such that it has the same polarity facing the first sliding permanent magnet to create a repulsive magnetic field. The guide tracks **34** secure the rear ski binding **16** to the slidable track **32** to maintain the first sliding permanent magnet proximate to the second sliding permanent magnet such that the rear ski binding **16** is slightly levitated. The guide track **34** allows slidable movement of the rear ski binding **16** forward and rearward along the slidable track **32**. In this manner, nearly frictionless movement of the rear binding **16** is achieved based on the repulsing magnetic field of the first and second sliding permanent magnets.

The system **10** of the invention further comprises a front electromagnet **38** which is located proximate to the front magnetic interface. In one presently preferred embodiment, the front electromagnet **38** is located in the front binding **14**, but in alternative embodiments it may be located in the toe portion of the boot **12**. The front electromagnet **38** is turned off while the boot **12** is secured to the front binding **14**. However, when the front electromagnet **38** is turned on, the front electromagnet **38** creates a magnetic field which repulses the toe permanent magnet **20** of the boot **12** from the front binding **14**. Thus, the front magnetic interface is reversed from an attractive field to a repulsive field instantaneously upon operation of the front electromagnet **38**. The repulsive field forces the boot **12** rearward from the front binding **14**.

In one embodiment the front electromagnet **38** comprises a wire coil which is disposed around the front permanent magnet **22** in the front binding **14**. When operation of the front electromagnet **38** is desired, a current is sent through the wire coil which reverses the polarity of the front permanent magnet **22** and causes the front permanent magnet **22** to repulse the toe permanent magnet **20**.

In an alternative embodiment, the front electromagnet **38** comprises one or more electromagnets adjacent the front permanent magnet **22**. When the front electromagnet **38** is turned on, the one or more electromagnets create a repulsive magnetic field substantially stronger than the attractive magnetic field that exists between the front and toe permanent magnets **22, 20**. This results in an instantaneous repulsion of the toe of the boot **12** from the front binding **14**.

The invention of the system also comprises a rear electromagnet **40** which is located proximate to the rear magnetic interface. The rear electromagnet **40** operates to repulse the heel portion of the boot **12** from the rear binding **16**. In one presently preferred embodiment the rear electromagnet **40** is located in the rear binding as shown in FIG. **1**. However in alternative embodiments the rear electromagnet **40** may be located in the heel portion of the boot **12**. As with the front electromagnet **38**, the rear electromagnet **40** may be comprised of a wire coil disposed around the rear permanent magnet **26** or may be comprised of one or more independent electromagnets. Operation of the rear electromagnet **40** is similar to that of the front electromagnet **38**.

The combination of permanent magnets **20, 22, 26, 28** and electromagnets **38, 40** allows for ski bindings **14, 16** which attract or repulse the ski boot **12** as desired. The system of the invention further eliminates most moving, mechanical parts. As mentioned previously, the strength of the attractive magnetic fields between the permanent magnets **20, 22, 26, 28** is sufficient to ensure coupling of the boot **12** to the bindings **14, 16** throughout normal use. The strength of the permanent magnets **20, 22, 26, 28** is based on the size and type of skis and boots. The strength of the front and rear electromagnets **38, 40** to achieve a repulsive magnetic field is determined by the strength of the permanent magnets **20, 22, 26, 28**.

When the skier desires to insert the boot **12** into the bindings, the rear electromagnet **40** is turned on. This causes the rear binding **16** to move rearward from the heel of the boot **12** along the slidable track **32** to allow insertion of the boot **12** between the front and rear bindings **14, 16**. Once the boot **12** is inserted between the front and rear bindings **14, 16** the rear electromagnet **40** is turned off. This causes the rear binding **16** to move forward and couple with the heel portion of the boot **12** in response to the attractive field of the rear and heel permanent magnets **26, 28**. The toe portion of the boot **12** also couples with the front binding **14** in response to the attractive field of the toe and front permanent magnets **20, 22**.

During skiing, the front and rear electromagnets **38, 40** remain off to allow secure coupling of the boot **12** to the front and rear bindings **14, 16**. In normal use, the boot **12** is only released from the bindings **14, 16** through the use of electromagnetic fields. When the skier desires to remove the ski **18**, the front and rear electromagnets **38, 40** are simultaneously turned on which causes the boot **12** to be nearly instantaneously repulsed from the front and rear ski bindings **14, 16**. When the rear electromagnet **40** is turned on, the rear binding **16** slides rearward along the slidable track **32** which allows sufficient room for the boot **12** to be expelled from the bindings **14, 16**.

The boot **12** is also repulsed from the ski bindings **14, 16** in a number of situations which correspond to a potential injury. This is explained in greater detail below.

With reference to FIG. **3**, the front and rear electromagnets **38**, **40** are both in electrical communication with a switch **42** and a rechargeable power supply **44**. The switch **42** as defined herein is any electrical device which controls the flow of power to the front and rear electromagnets **38**, **40**. Both the switch **42** and rechargeable power supply **44** are preferably located in the ski bindings **14**, **16**. The front and rear electromagnets **38**, **40** need only be turned on for a fraction of a second in order to repulse the boot **12**. Accordingly, a large amount of power is not needed from the power supply **44** for a release of the boot **12**.

With reference to FIG. **4**, the system **10** of the present invention is shown further comprising a series of sensors **46** which are placed on the ski bindings **14**, **16** at different locations to sense pressure, stress, and torque. In one presently preferred embodiment, the sensors **46** are placed in the front and rear bindings **14**, **16** and to the left and right of the boot **12**. The sensors **46** may be embodied as piezoelectric transducers. In one embodiment as shown in FIG. **4**, sensors **46** are positioned on the front and rear ledges **24**, **30** of the respective front and rear ski bindings **14**, **16**. In order to register torque, a couple of sensors **46** are placed on top of one another at any one of the sensor locations. As the top and bottom sensors **46** move relative to one another, the torque experienced at that location may be transmitted. The sensors **46** provide a far superior response to the pressure and stress that the bindings **14**, **16** and boot **12** are subject to than conventional mechanical ski bindings. Conventional ski bindings are unresponsive to previous pressure, stresses, and torques from various directions, but the sensors **46** are able to register such forces.

The sensors **46** are in electrical communication with a microprocessor **48** and output signals to the microprocessor **48** which represent the pressure, stress, and torque to which the bindings **14**, **16** are being subjected to. The emitted signals from the sensors **46** are analog signals but are converted to digital signals before reaching the microprocessor **48**.

In one presently preferred embodiment, the microprocessor **48** is located in the ski bindings **14**, **16**, however, in alternative embodiments the microprocessor **48** may be located in the boot **12**. The microprocessor **48** is in electrical communication with the switch **42** and the front and rear electromagnets **38**, **40** as well as the sensors **46**. The microprocessor **48** comprises memory such as an EPROM **50** which is programmed to process incoming signals and, based on programmed parameters, determine if the boots **12** need to be released. The programmed parameters reflect a variety of factors which would be used to calculate the threshold for the amount of stress, pressure, or torque for the skier. Some of these factors can include the skier's ability and age, the skier's weight, the terrain, the weather conditions, snow conditions, and so forth.

The sensors **46** constantly transmit signals to the microprocessor **48** which reflect stress, pressure, and torque. The microprocessor **48** processes the signals and determines if the programmed threshold is reached which indicates a likely injury situation. Upon reaching the threshold, the microprocessor **48** toggles the switch **42** to simultaneously turn on both the front and rear electromagnets **38**, **40**. This results in the nearly instantaneous release of the boot **12** from the ski bindings **14**, **16**. In this manner, a release is achieved which is far quicker than that possible with bindings using mechanical components.

The microprocessor **48** is also in electrical communication with a manual release button **52**. The manual release button **52** is preferably located on the bindings **14**, **16** and is used by the skier when a release of the boot **12** is desired. The skier simply toggles the manual release button **52**, the microprocessor **48** receives a corresponding signal, and then the microprocessor **48** activates the electromagnets **38**, **40**. All control of the release of the boot **12** is thus directed through the microprocessor **48**.

The system **10** of the invention relies on a rechargeable power supply **44** which, in the preferred embodiment, is located on the bindings **14**, **16**. The power supply **44** is in electrical communication with and provides power to the sensors **46**, microprocessor **48**, and electromagnets **38**, **40**. The power supply **44** may be embodied as nicad or lithium batteries and when fully charged would have sufficient charge for several hours of normal skiing. One skilled in the art will appreciate that various embodiments for the power supply **44** are possible and are included within the scope of the invention.

The system **10** of the invention may incorporate additional features to allow for microprocessor controlled release of the boot **12** based on additional input. With reference to FIGS. **5***a*, **5***b*, **5***c* a transmitter **54** is shown placed in the forward portion of one ski **18**. The transmitter **54** transmits to a receiver **56** which is placed on the forward portion of the other ski. The transmitter signal is preferably digitally encoded to prevent communication with other ski receivers. The receiver **56** is in electrical communication with the microprocessor **48** to transmit a signal to the microprocessor **48** indicative of the communication between the receiver **56** and the transmitter **54**. In this manner, the transmitter **54** and the receiver **56** act in conjunction to indicate the relative position of the skis **18** with respect to one another.

In one presently preferred embodiment, the continued communication of the transmitter **54** to the receiver **56** indicates a non-release situation. The transmitter **54** has a transmit arc **58** such that communication is enabled when the receiver **56** is within the range of the arc **58**. When the receiver **56** is outside the arc, then communication between the transmitter **54** and receiver **56** is interrupted. Interruption of the communication indicates that a potential injury situation is imminent. The receiver **56** relays to the microprocessor **48** that the communication has been interrupted. The microprocessor **48** then sends a signal to the front and rear electromagnets **38**, **40** to release the boot **12** from the bindings **14**, **16**.

FIGS. **5***a*, **5***b*, and **5***c* show series of ski positions which illustrate the communication of the transmitter **54** and receiver **56**. In FIG. **5***a*, the skis are shown in a normal position wherein they are substantially parallel to one another. The transmission arc **58** is indicated in a dotted line and the transmitter **54** and receiver **56** are able to communicate without interruption. In FIG. **5***b*, a "split" position is shown wherein the front ends of the skis **18** are to far angled from one another. Such a position likely results in an injury. As shown, the transmission is interrupted and the microprocessor **48** would signal a release of the boots **12**. In FIG. **5***c*, the skis **18** have become crossed and overlap one another. Such a position also likely indicates that an injury is imminent. As with FIG. **5***b*, the transmission is interrupted and the microprocessor **48** would signal the release of the boots **12**.

In an alternative embodiment the transmitter and receiver communication may be more sophisticated so that the transmission relays the actual distance between the transmitter **54** and receiver **56**. In such an embodiment, the microprocessor **48** signals a release of the boots **12** if the distance becomes too great or too little. The microprocessor **48** may also

release the boot **12** if the transmission is interrupted completely as with the previous embodiment.

With reference to FIG. **6**, an additional feature which may be incorporated into the system of the present invention is shown which includes the use of transmitters **60** and a receiver **62** to indicate body position. This feature utilizes transmitters **60** which are fixed to different locations of the skier's body. In one presently preferred embodiment the transmitters **60** are placed on each limb of the skier. The positions of the transmitters **60** and receiver **62** are generally shown as they would be disposed in one presently preferred embodiment. In one embodiment, transmitters **60** are attached to each knee and to each forearm of the skier. A receiver **62** is fixed onto the torso of the skier at approximately the center of gravity of the skier. The positions of the transmitters **60** and receiver **62** represent only one possibility and one skilled in the art will appreciate that a variety of dispositions are possible and are included within the scope of the invention.

Preferably, the transmitters **60** transmit a digitally encoded signal so as to prevent interference with other skiers or ski equipment. The receiver **62** is in electrical communication with the microprocessor **48** and send signals indicating the communication between the transmitters **60** and receiver **62**.

In one presently preferred embodiment, the transmitters **60** have a directed transmission arc. Knee transmitters **60** are generally directed upwards towards the torso and forearm transmitters **60** are generally directed towards the torso. The transmission to the receiver **62** is interrupted when the receiver **62** is outside the transmission arc. In the normal course of skiing, the receiver **62** remains within the transmission arc of each transmitter **60**. If one or more transmitters **60** breaks contact with the receiver **62**, then the limbs are in a position that indicates an injury position is likely. One example of this is when the skier's hips are below the knees. Another example of this is when the arms are behind the back. When the transmission is interrupted, the receiver **62** relays this to the microprocessor **48** which in turn signals the release of the boots **12**.

The transmitters **60** on the knees and forearms may be digitally encoded differently so that the microprocessor **48** can distinguish between each transmitter **60**. Thus, the microprocessor **48** is informed as to which limb or limbs are out of normal skiing position. The microprocessor **48** may then be programmed to release the boots **12** based on limb positions. For example, interruption of transmission of one forearm transmitter **60** does not signal a release, however, interruption of both forearm transmitters **60** does signal a release. Similar programming may be available for the knee transmitters **60** as well.

In an alternative embodiment of the body position feature, a transmitter **60** is disposed on the torso of the skier. As before, the transmission is preferably digitally encoded to prevent interference with other skiers and ski equipment. Receivers **62** are disposed approximately on each forearm and on each knee. The transmitter **60** has a transmission arc of approximately 180 degrees and is directed forward from the skier. Thus, when the knees and forearms are forward of the torso, the transmission continues uninterrupted. When the knees or forearms extend behind the torso, the transmission is interrupted and a release is signaled.

In embodiments which incorporate the ski position and body position release features, interruption of the transmissions may occur when the skier is in a sitting position. This occurs, for example, when the skier is riding on the chairlift. Obviously, the skier does not want the boot **12** to release during this time. Accordingly, the microprocessor **48** may be programmed to disregard releases based on ski and body positions when the sensors **46** signal low pressures. Low pressures correspond to the situation where the skier is no longer placing substantially all of the skier's weight on the skis **18**. Thus, when the skier is in a sitting position, release based on ski and body position is temporarily suspended.

With reference to FIG. **7**, a block diagram illustrating the microprocessor **48**, the sensors **46**, and the receivers **62** of the invention are shown. The sensors **46** located on the ski bindings **14**, **16** are preferably embodied as pressure transducers and generate an analog signal which is converted to a digital signal and is sent to the microprocessor **48**. The microprocessor **48** processes these signals to determine if a threshold has been reached which signals release of the boot **12**. Certain thresholds are established in the programming for the sensors **46** in the front binding **14**, rear binding **16**, and to each side of the boot **12**. Thus, the threshold may be reached by substantial pressure, stress, or torque in one sensor **46** or with pressure, stress, or torque in a combination of sensors **16**. As previously mentioned, the threshold for release is established by weighting factors representing the body weight of the skier, skier ability, ski conditions, age, ski type, boot type, gender, and so forth. The parameters for each factor may be programmed in the EPROM **50** prior to each ski trip to allow customization as desired.

The manual release button **52** is further illustrated in electrical communication with the microprocessor **48**. Another possible embodiment of the system **10** of the present invention includes a pole manual release button **64** disposed on the ski pole. Preferably, the pole manual release button **64** is recessed on the ski pole, such as in the handle of the ski pole. This prevents accidental depression of the button during skiing. The pole manual release button **64** is in electrical communication with a transmitter also disposed on the pole. The transmitter transmits a digitally encoded signal to a receiver which is in electrical communication with the microprocessor **48**. The receiver sends the signal to the microprocessor **48** which in turn releases the boots **12** from the bindings **14**, **16**. The receiver may be the same one disposed on the ski to relay ski position, may be one disposed on the skier's body to relay body position, or may be an additional receiver disposed on the bindings or body. The transmitter preferably has a spherical transmission so as to enable easy reception by the receiver.

An additional feature which may be incorporated into the system of the present invention is a security alarm. A motion sensor or other security sensor **66** is disposed on the skis **18** and is in electrical communication with the microprocessor **48**. When the sensor **66** is activated, the microprocessor **48** signals an alarm **68** to sound. The owner deactivates the sensor **66** or alarm **68** by toggling a manual button which is in electrical communication with a transmitter. The transmitter sends a digitally encoded signal to a receiver disposed on the skis and in electrical communication with the microprocessor **48**. The receiver sends a signal to the microprocessor **48** which in turn deactivates the sensor **66** or alarm **68**. In a similar manner, the owner may activate the sensor **66** when leaving the skis so as to deter theft. The manual button and transmitter may be disposed on the ski pole, key chain, or other item carried by the owner.

A possible additional feature of the invention is a temperature sensor **70** disposed on the ski bindings **14**, **16** and in electrical communication with the microprocessor **48**. The temperature sensor **70** generates digital signals representative of the outside temperature. The signals are sent to

the microprocessor **48**. The microprocessor **48** factors the temperature as a weighting factor into its programmed algorithm for determining the threshold for release of the boot **12** from the bindings. If the system **10** uses a mechanical component, such as for the sliding track **32** of the rear binding **16**, then the temperature effects the timing of the release. In colder weather, a lower threshold for quicker release is desired to compensate for the delay of the mechanical component. Alternatively, in warmer weather, a higher threshold is permissible because of the reduced delay.

Additional inputs to the microprocessor **48** include digitally encoded signals from the receivers **46**, **62** which correspond to the ski positions and body position of the skier. These inputs indicate an interruption of transmission, and the microprocessor **48** is programmed to effect release upon interruption of one or more of the transmissions. Thus, the processing of the receiver signals does not consider the threshold value which is established for skier customization factors.

Each ski **18** preferably has its own microprocessor **48**. Thus, there is a microprocessor **48** for each ski binding system **10** which is responsible for releasing its own respective boot **12**. In common potential injury situations, the release of one boot **12** occurs first and then the release of the other boot **12** naturally follows based on sensors **46** or receiver input.

In an alternative embodiment, both microprocessors **48** are in electrical communication with one another. This may be accomplished by the use of transceivers or other conventional means. When the first microprocessor **48** effects release of its boot from the ski bindings **14**, **16**, it signals the release to the second microprocessor **48**. The second microprocessor **48** in turn effects release of its own boot **12**. The transmission of the release signal is almost instantaneous and results in nearly simultaneous release of both boots **12**.

In yet another alternative embodiment, a single microprocessor **48** may control the release of both boots **12**. The single microprocessor **48** is in electrical communication with all the inputs for each boot **12** and the electromagnets **38**, **40** for each boot **12**. Such electrical communication may be achieved by transceiver communication or other conventional means. Thus, if one boot **12** is to be released, the microprocessor **48** effects release of both boots **12**.

The system **10** of the invention provides engagement of the boot **12** to the ski bindings **14**, **16** which is dependent on magnetic fields rather than mechanical means. The elimination of nearly all moving, mechanical parts results in superior reliability, quicker release, and overall performance. Furthermore, release of the bindings **14**, **16** is computer controlled which allows for individual customization, quicker response, and a response to a broader range of potential injury situations.

It should be appreciated that the apparatus and methods of the present invention are capable of being incorporated in the form of a variety of embodiments, only a few of which have been illustrated and described above. The described embodiments are to be considered in all respects only as illustrative and not restrictive of the scope of the invention.

What is claimed is:

1. An electric ski binding system for use on a ski which provides magnetic interface to effect binding of a ski boot with the ski binding system, comprising:

a front binding having a front permanent magnet and a front electromagnet;

a rear binding having a rear permanent magnet and a rear electromagnet;

a toe permanent magnet and a heel permanent magnet disposed on the ski boot such that the toe permanent magnet forms an attractive magnetic field with the front permanent magnet and the heel permanent magnet forms an attractive magnetic field with the rear permanent magnet;

a front sensor disposed on the front binding;

a rear sensor disposed on the rear binding; and

a processor having a memory and in electrical communication with the front and rear electromagnets and the front and rear sensor, the processor receiving and processing signals from the front and rear sensors to determine if a threshold value is reached, the processor enabling operation of the front and rear electromagnets upon reaching the threshold value to create a repulsive magnetic field between the front electromagnet and the toe permanent magnet and between the rear electromagnet and the heel permanent magnet, and wherein the repulsive magnetic field is sufficient to overcome the attractive magnetic fields and effect release of the ski boot from contact with the front and rear bindings.

2. The electric ski binding system of claim **1** further comprising at least one side sensor wherein the side sensor is in electrical communication with the processor and wherein the processor receives and processes signals from the at least one side sensor to determine if a threshold value is reached.

3. The electric ski binding system of claim **1** wherein the front electromagnet comprises a wire coil disposed around the front permanent magnet and the rear electromagnet comprises a wire coil disposed around the rear permanent magnet.

4. The electric ski binding system of claim **1** further comprising a power source and a switch in electrical communication with the processor and the front and rear electromagnets, wherein operation of the switch is controlled by the processor to effect operation of the front and rear electromagnets.

5. The electric ski binding system of claim **1** further comprising a transmitter disposed on the ski and a receiver disposed on a second ski and in electrical communication with the processor, wherein the transmitter transmits a signal to the receiver, and wherein the receiver relays a communication to the processor upon interruption of the signal to indicate a release situation.

6. The electric ski binding system of claim **1** further comprising a transmitter adapted to dispose on a skier and a receiver adapted to dispose on the skier and in electrical communication with the processor, wherein the transmitter transmits a signal to the receiver, and wherein the receiver relays a communication to the processor upon interruption of the signal to indicate a release situation.

7. The electric ski binding system of claim **1** further comprising a manual release button in electrical communication with the processor wherein operation of the manual release button indicates a release situation.

8. The electric ski binding system of claim **1** further comprising a security sensor and an alarm in electrical communication with the processor wherein the security sensor sends a signal to the processor and the processor activates the alarm in response to the signal.

9. The electric ski binding system of claim **1** wherein the processor is in electrical communication with a second processor in a second electric ski binding system for effecting release of a second ski boot, wherein the processor transmits a signal indicative of a release situation to the second processor to effect release of the second ski boot.

10. The electric ski binding system of claim **1** wherein the processor is programable to adjust weighting factors used in determining the threshold value for a release situation.

11. The electric ski binding system of claim **10** further comprising a temperature sensor in electrical communication with the processor wherein the processor receives and processes signals from the temperature sensor to adjust the threshold value.

12. An electric ski binding system for use on a ski which provides magnetic interface to effect binding and releasable engagement of a ski boot with the ski binding system, comprising:

a front binding having a front permanent magnet and a front electromagnet;

a rear binding having a rear permanent magnet and a rear electromagnet, wherein the rear binding is mounted on a slidable track to allow movement to forward and rearward positions;

a toe permanent magnet and a heel permanent magnet disposed on the ski boot such that the toe permanent magnet forms an attractive magnetic field with the front permanent magnet and the heel permanent magnet forms an attractive magnetic field with the rear permanent magnet, wherein the attractive magnetic field are sufficiently strong to effect binding of the ski boot with the front and rear bindings, and wherein the rear binding is moved to a forward position during binding;

a front sensor disposed on the front binding;

a rear sensor disposed on the rear binding; and

a processor having a memory and in electrical communication with the front and rear electromagnets and the front and rear sensor, wherein the processor is programable to adjust weighting factors used in determining a threshold value for a release situation, wherein the processor receives and processes signals from the front and rear sensors to determine if a threshold value is reached, the processor enabling operation of the front and rear electromagnets upon reaching the threshold value to create a repulsive magnetic field between the front electromagnet and the toe permanent magnet and between the rear electromagnet and the heel permanent magnet, wherein the repulsive magnetic field is sufficient to overcome the attractive magnetic fields and effect release of the ski boot from contact with the front and rear bindings, and wherein the rear ski binding is moved to a rearward position during release.

13. The electric ski binding system of claim **12** further comprising at least one side sensor wherein the side sensor is in electrical communication with the processor and wherein the processor receives and processes signals from the at least one side sensor to determine if a threshold value is reached.

14. The electric ski binding system of claim **12** further comprising a power source and a switch in electrical communication with the processor and the front and rear electromagnets, wherein operation of the switch is controlled by the processor to effect operation of the front and rear electromagnets.

15. The electric ski binding system of claim **12** further comprising a transmitter disposed on the ski and a receiver disposed on a second ski and in electrical communication with the processor, wherein the transmitter transmits a signal to the receiver, and wherein the receiver relays a communication to the processor upon interruption of the signal to indicate a release situation.

16. The electric ski binding system of claim **12** further comprising a transmitter adapted to dispose on a skier and a receiver adapted to dispose on the skier and in electrical communication with the processor, wherein the transmitter transmits a signal to the receiver, and wherein the receiver relays a communication to the processor upon interruption of the signal to indicate a release situation.

17. The electric ski binding system of claim **12** further comprising a manual release button in electrical communication with the processor wherein operation of the manual release button indicates a release situation.

18. The electric ski binding system of claim **12** further comprising a security sensor and an alarm in electrical communication with the processor wherein the security sensor sends a signal to the processor and the processor activates the alarm in response to the signal.

19. The electric ski binding system of claim **12** further comprising a temperature sensor in electrical communication with the processor wherein the processor receives and processes signals from the temperature sensor to adjust the threshold value.

20. The electric ski binding system of claim **12** wherein the processor is in electrical communication with a second processor in a second electric ski binding system for effecting release of a second ski boot, wherein the processor transmits a signal indicative of a release situation to the second processor to effect release of the second ski boot.

* * * * *