US 20050152665A1

(19) United States

(12) Patent Application Publication

(10) Pub. No.: US 2005/0152665 A1

(43) Pub. Date: Jul. 14, 2005

Shibata et al.

(54) VIDEO CONTENT EDITION SUPPORT SYSTEM AND VIDEO CONTENT EDITION SUPPORT METHOD

(76) Inventors: **Yoshiaki Shibata**, Kanagawa (JP); **Ryosuke Hayashi**, Kanagawa (JP); **Hiroshi Kajita**, Kanagawa (JP); **Takumi Yoshida**, Kanagawa (JP)

Correspondence Address:
Frommer Lawrence & Haug
745 Fifth Avenue
New York, NY 10151 (US)

(21) Appl. No.: **10/510,113**

(22) PCT Filed: **Apr. 3, 2003**

(86) PCT No.: **PCT/JP03/04295**

(30) **Foreign Application Priority Data**

Apr. 5, 2002 (JP) 2002-104179

Publication Classification

(51) **Int. Cl.**[7] **H04N 9/74**

(52) **U.S. Cl.** **386/4**

(57) **ABSTRACT**

A video content edition support system is provided which includes an imaging device (**2**) to record captured video content data to a recording medium (**14**), an editor's terminal unit (**4**) to display video content data transmitted from the imaging device (**2**) and a network to connect the imaging device (**2**) and editor's terminal unit (**4**) to each other. The video content edition support system further includes a recorder to describe electronic mark data related to the video content data in the video content data, an electronic mark list generator (**28**) to generate electronic mark list data including header information on the video content data, and an edition unit (**26**) to edit the video content data on the basis of the electronic mark list data. The video content edition support system permits to select necessary video content data on the basis of the heater information in which a feature of video content data included in the electronic mark list data is described and edit the video content data directly. Information on the to-be-edited video content data is collected in the electronic mark list data.

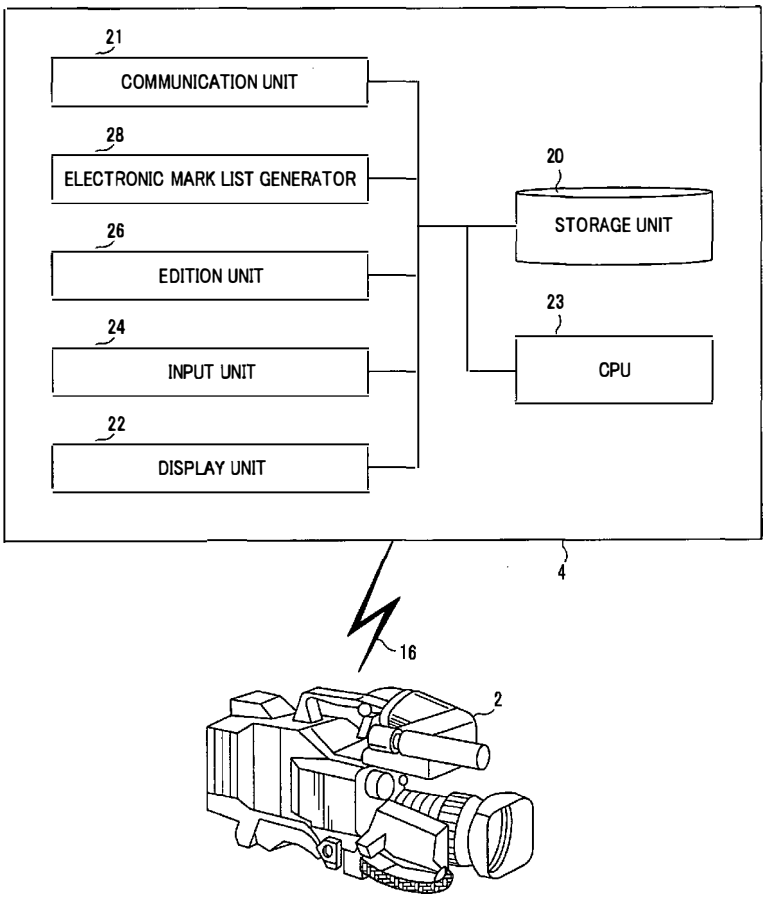

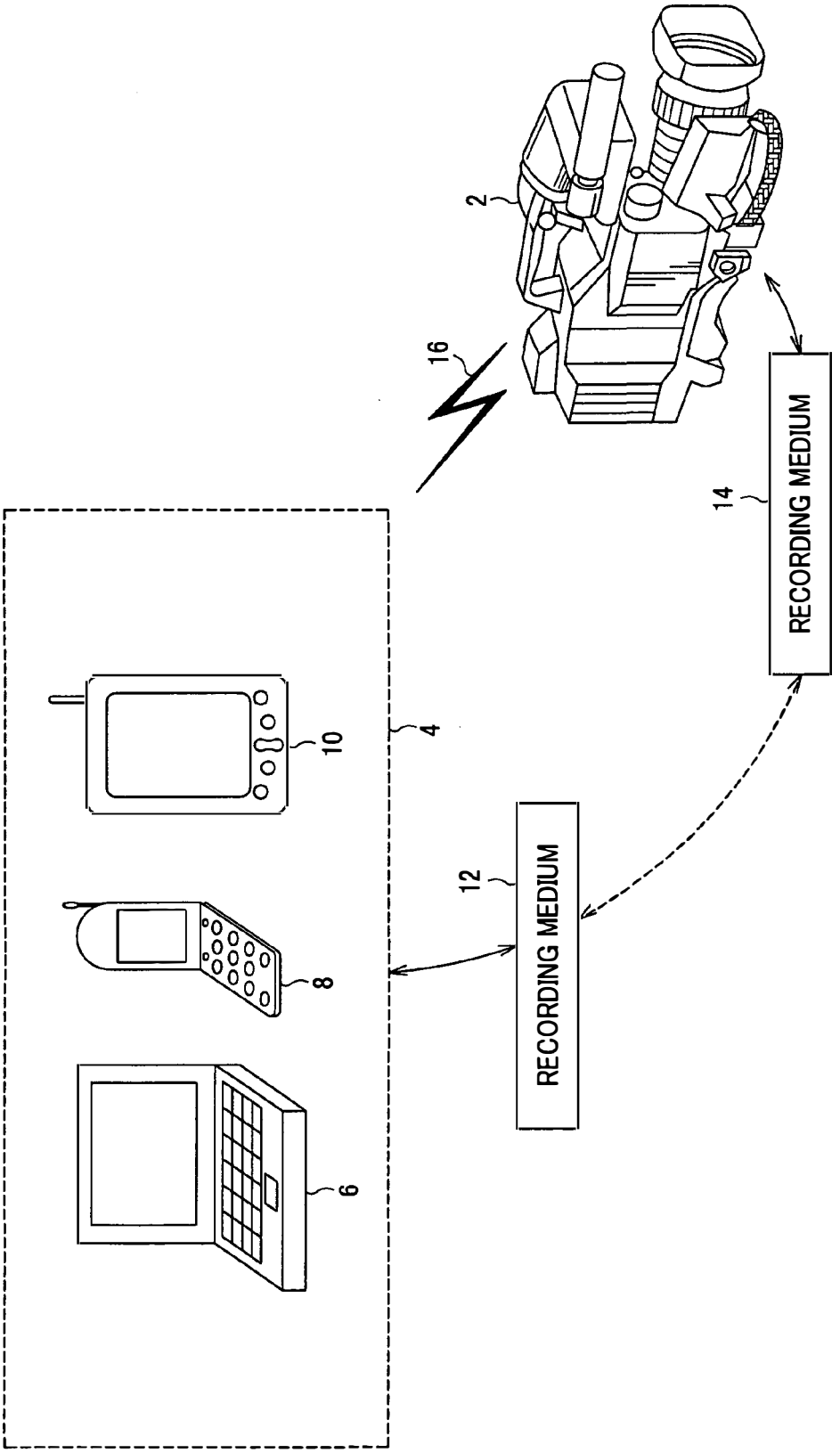

FIG. 1

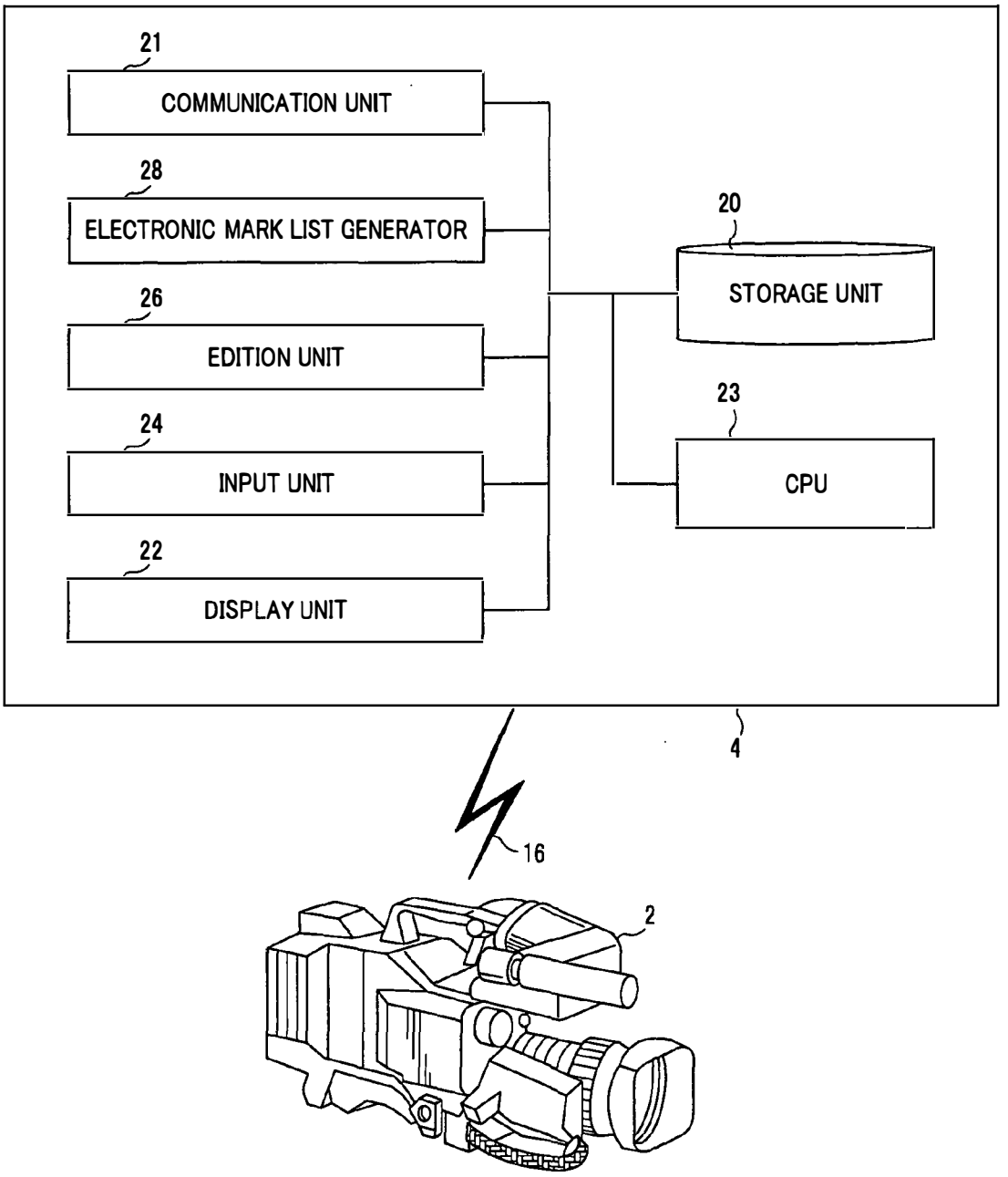
21
COMMUNICATION UNIT
28
ELECTRONIC MARK LIST GENERATOR
26
EDITION UNIT
24
INPUT UNIT
22
DISPLAY UNIT
20
STORAGE UNIT
23
CPU
4
16
2

FIG. 2

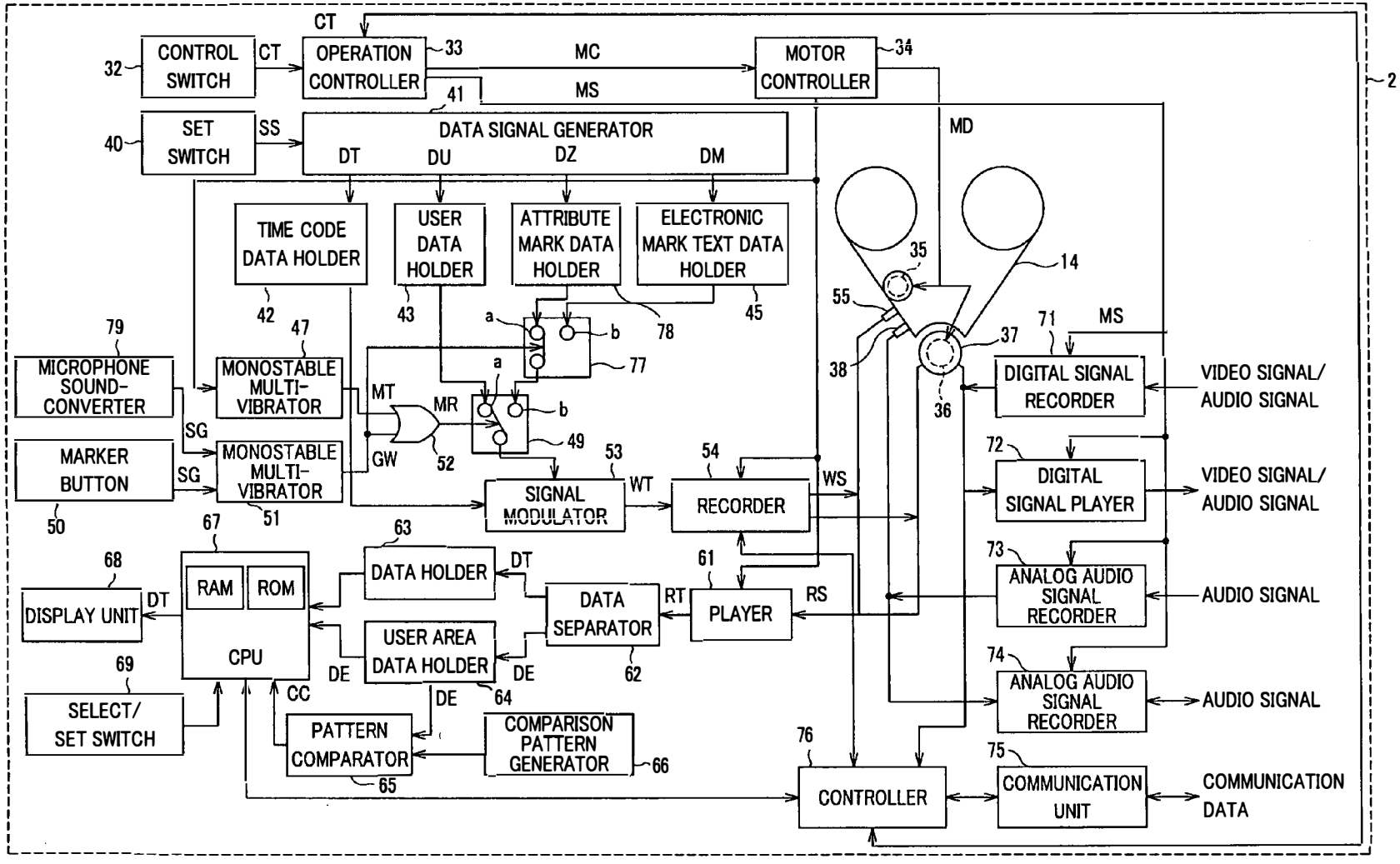
CONTROL SWITCH
CT
OPERATION CONTROLLER
MC
MS
MOTOR CONTROLLER
SET SWITCH
SS
DATA SIGNAL GENERATOR
DT
DU
DZ
DM
MD
TIME CODE DATA HOLDER
USER DATA HOLDER
ATTRIBUTE MARK DATA HOLDER
ELECTRONIC MARK TEXT DATA HOLDER
MICROPHONE SOUND-CONVERTER
MONOSTABLE MULTI-VIBRATOR
MARKER BUTTON
SG
MT
MR
GW
SIGNAL MODULATOR
WT
RECORDER
WS
DIGITAL SIGNAL RECORDER
DIGITAL SIGNAL PLAYER
ANALOG AUDIO SIGNAL RECORDER
VIDEO SIGNAL/ AUDIO SIGNAL
AUDIO SIGNAL
DISPLAY UNIT
RAM
ROM
CPU
DATA HOLDER
USER AREA DATA HOLDER
DATA SEPARATOR
RT
PLAYER
RS
DE
CC
SELECT/ SET SWITCH
PATTERN COMPARATOR
COMPARISON PATTERN GENERATOR
CONTROLLER
COMMUNICATION UNIT
COMMUNICATION DATA

FIG.3

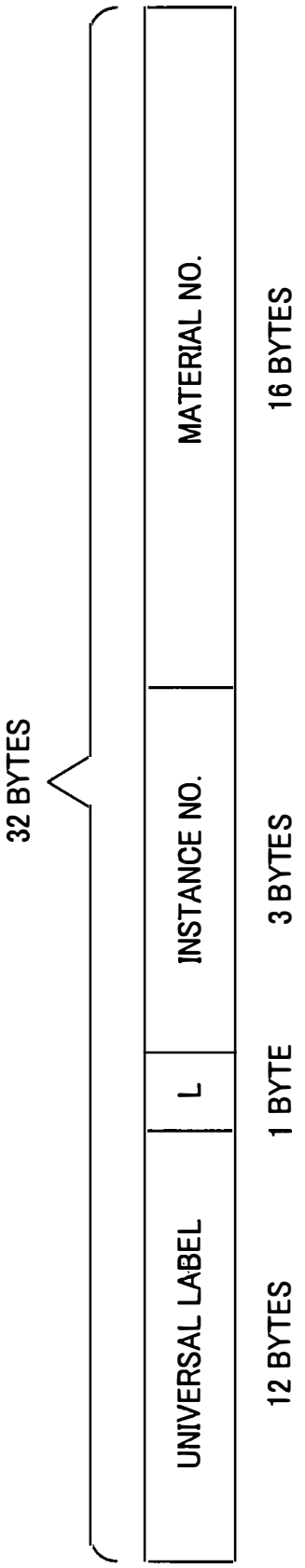
32 BYTES
UNIVERSAL LABEL
12 BYTES
L
1 BYTE
INSTANCE NO.
3 BYTES
MATERIAL NO.
16 BYTES

FIG.4

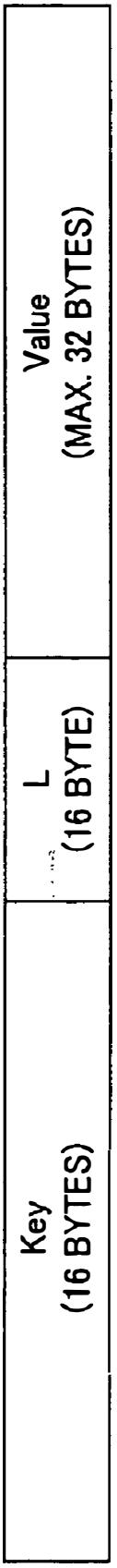

FIG.5

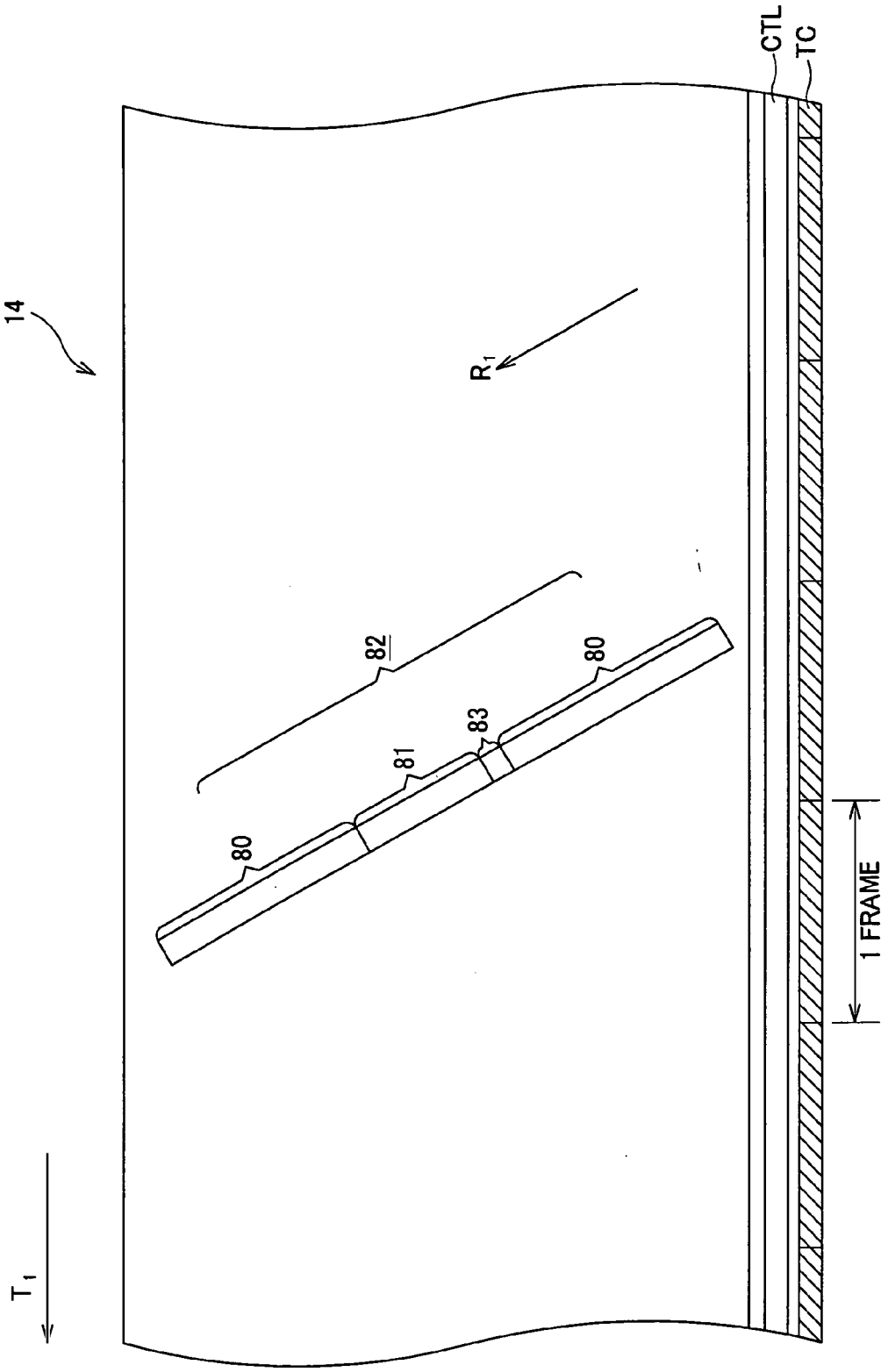

FIG.6

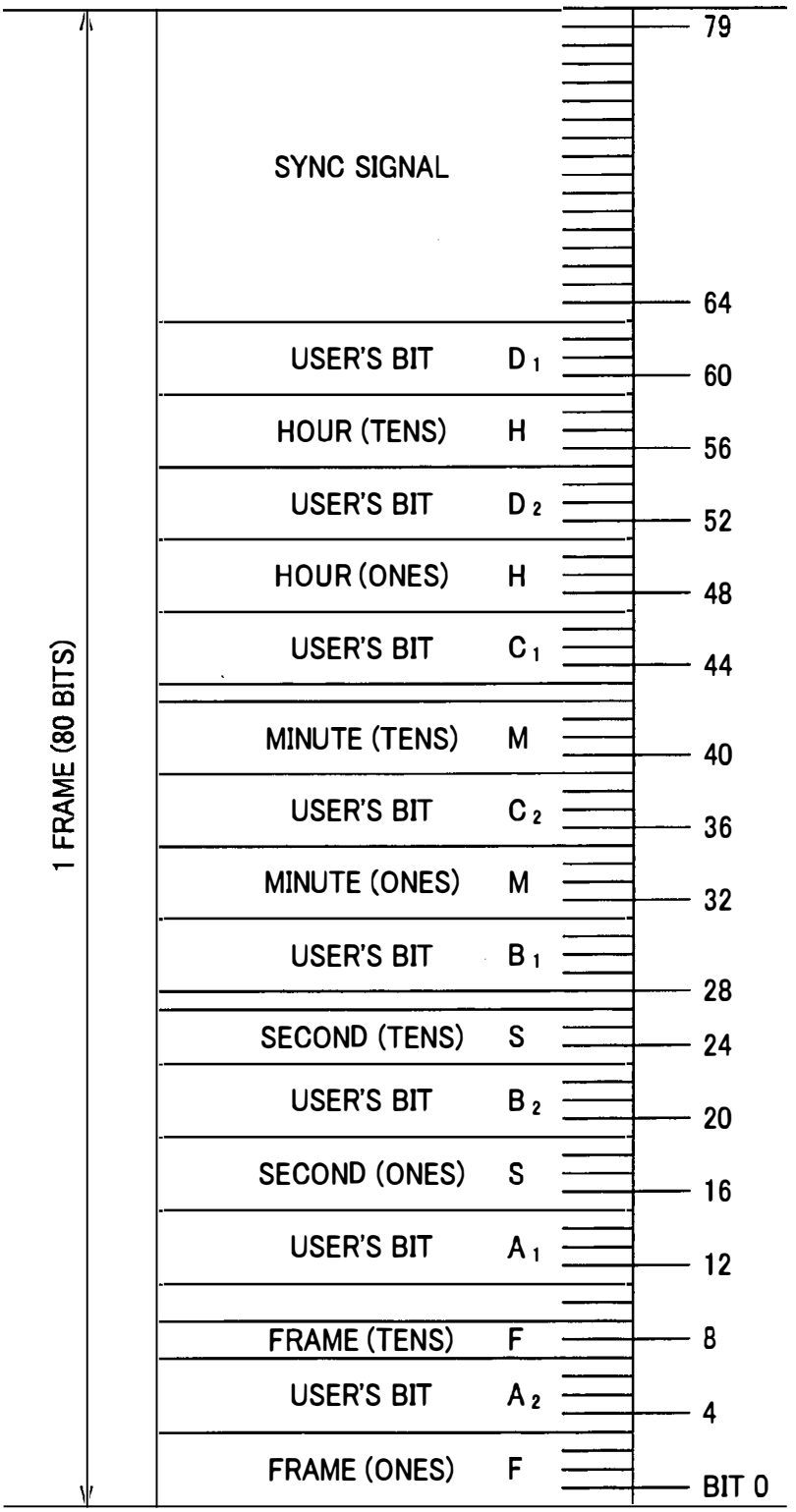
1 FRAME (80 BITS)
SYNC SIGNAL
USER'S BIT D1
HOUR (TENS) H
USER'S BIT D2
HOUR (ONES) H
USER'S BIT C1
MINUTE (TENS) M
USER'S BIT C2
MINUTE (ONES) M
USER'S BIT B1
SECOND (TENS) S
USER'S BIT B2
SECOND (ONES) S
USER'S BIT A1
FRAME (TENS) F
USER'S BIT A2
FRAME (ONES) F
79
64
60
56
52
48
44
40
36
32
28
24
20
16
12
8
4
BIT 0

FIG.7

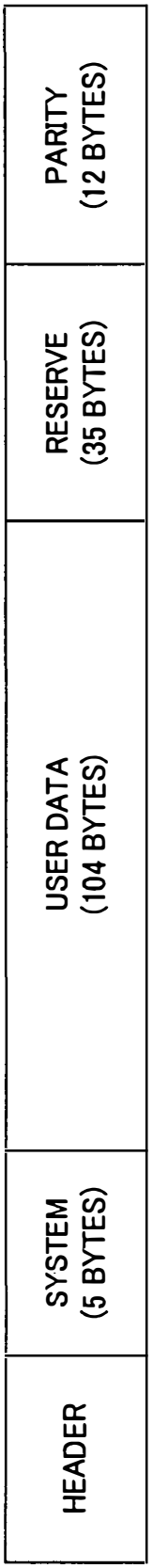
HEADER
SYSTEM
(5 BYTES)
USER DATA
(104 BYTES)
RESERVE
(35 BYTES)
PARITY
(12 BYTES)

FIG.8

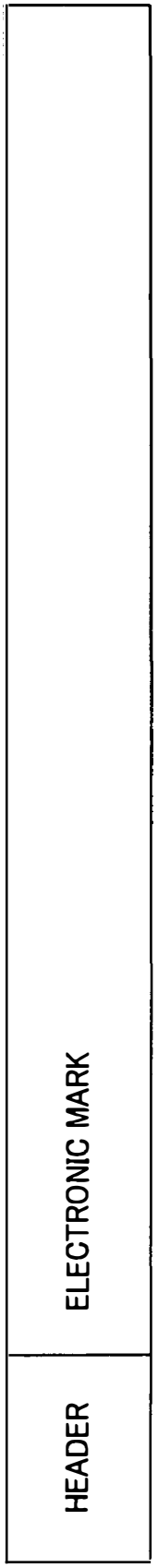

FIG.9

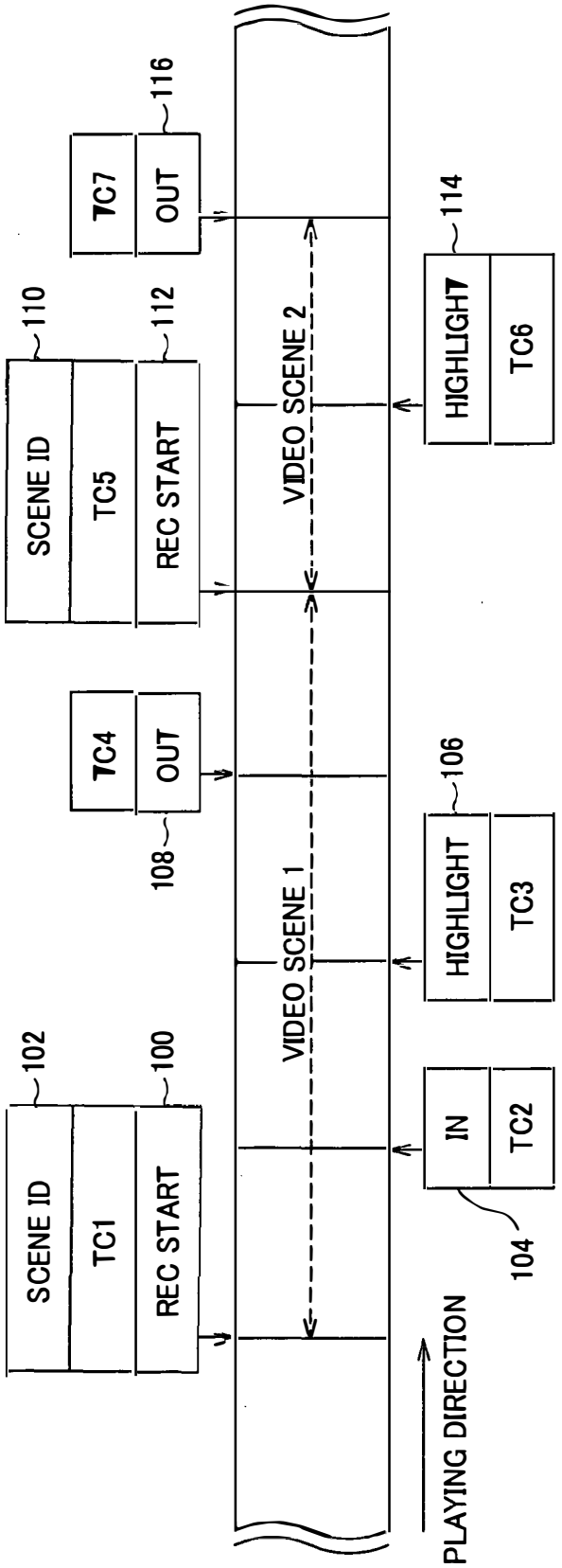
SCENE ID
TC1
REC START
102
100
VIDEO SCENE 1
IN
TC2
104
HIGHLIGHT
TC3
106
TC4
OUT
108
SCENE ID
TC5
REC START
110
112
VIDEO SCENE 2
HIGHLIGHT
TC6
114
TC7
OUT
116
PLAYING DIRECTION

FIG.10

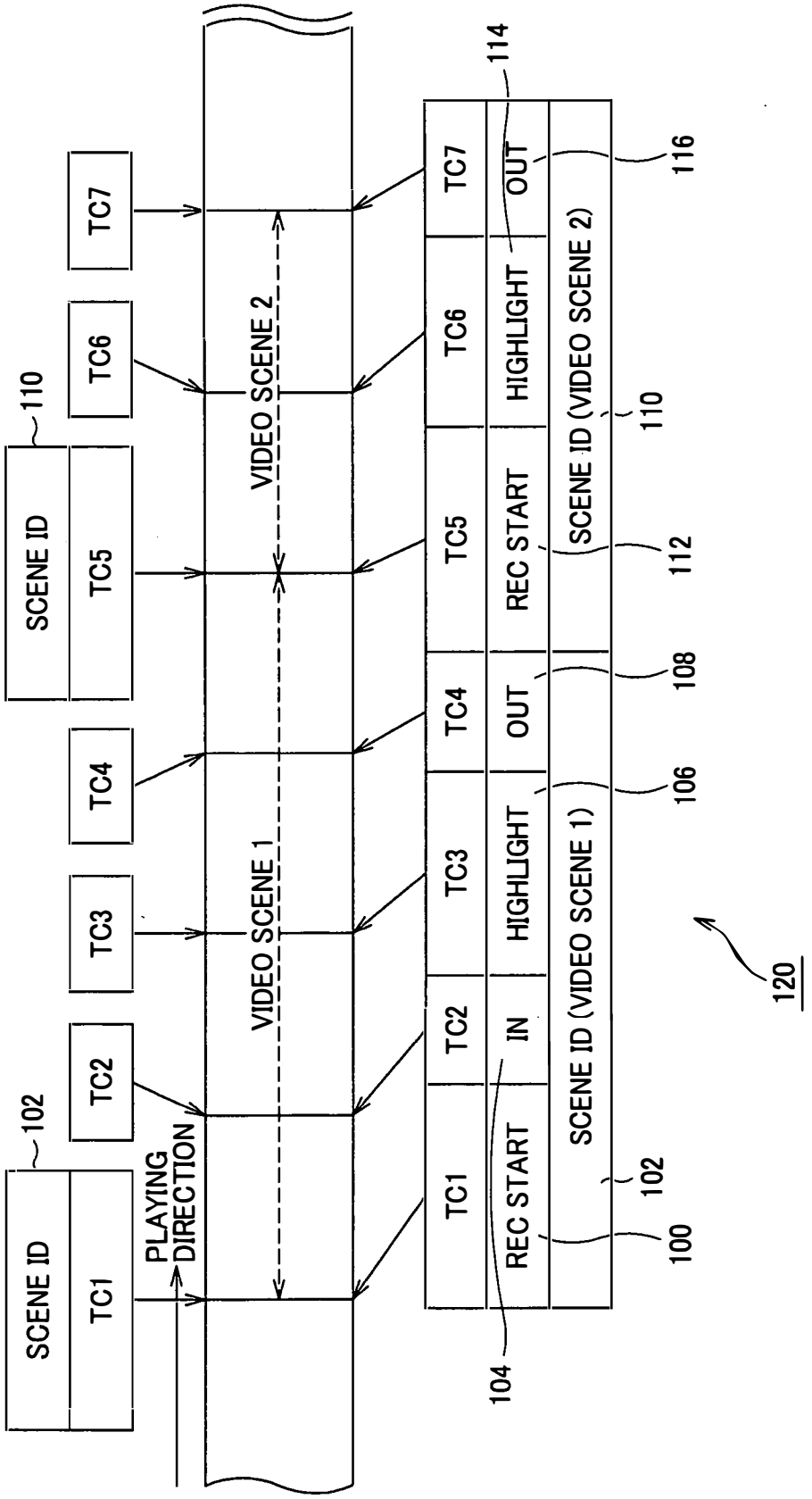
SCENE ID
TC1
TC2
TC3
TC4
SCENE ID
TC5
TC6
TC7
102
110
PLAYING DIRECTION
VIDEO SCENE 1
VIDEO SCENE 2
TC1
TC2
TC3
TC4
TC5
TC6
TC7
REC START
IN
HIGHLIGHT
OUT
REC START
HIGHLIGHT
OUT
SCENE ID (VIDEO SCENE 1)
SCENE ID (VIDEO SCENE 2)
100
102
104
106
108
110
112
114
116
120

FIG.11

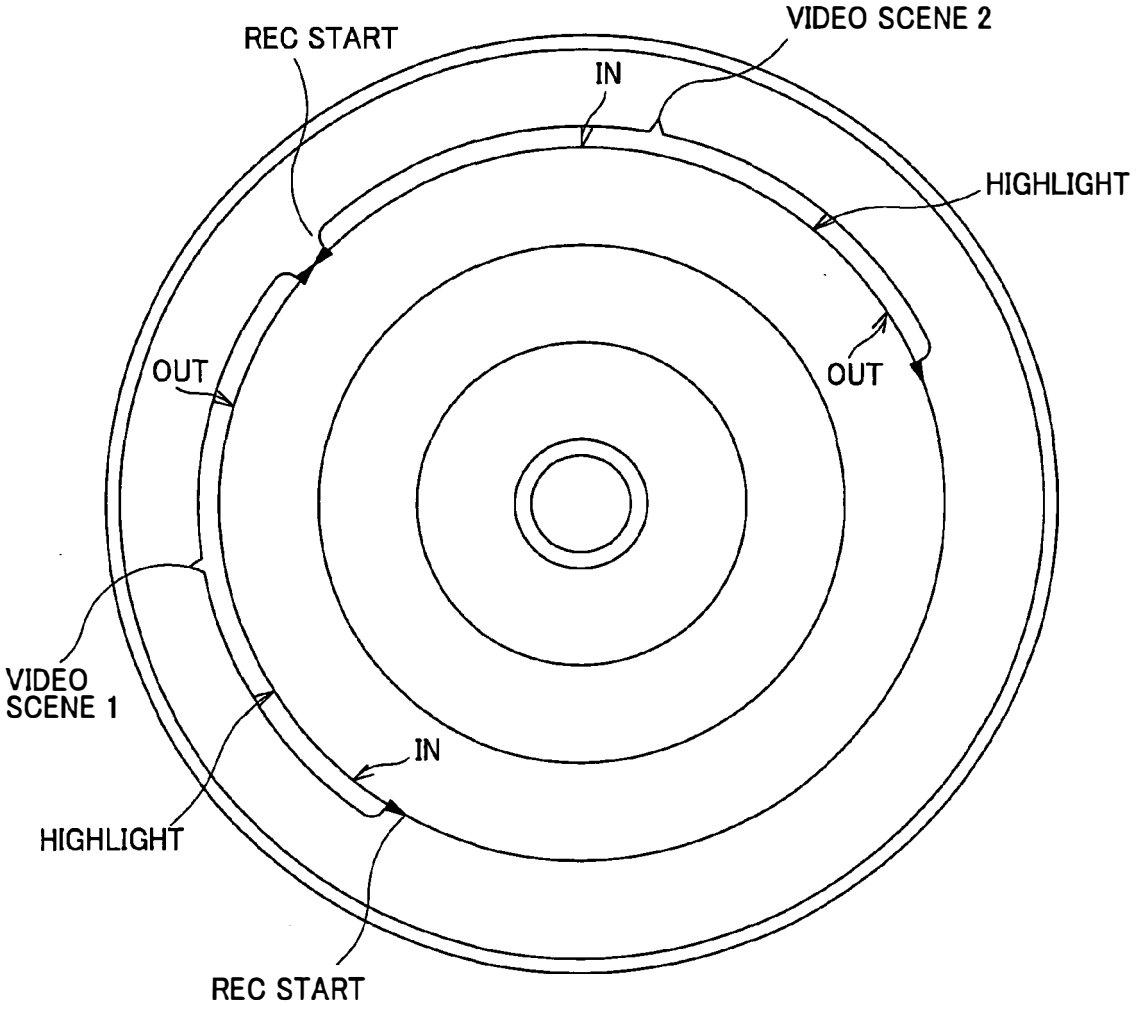
REC START
VIDEO SCENE 2
IN
HIGHLIGHT
OUT
OUT
VIDEO
SCENE 1
IN
HIGHLIGHT
REC START

FIG.12

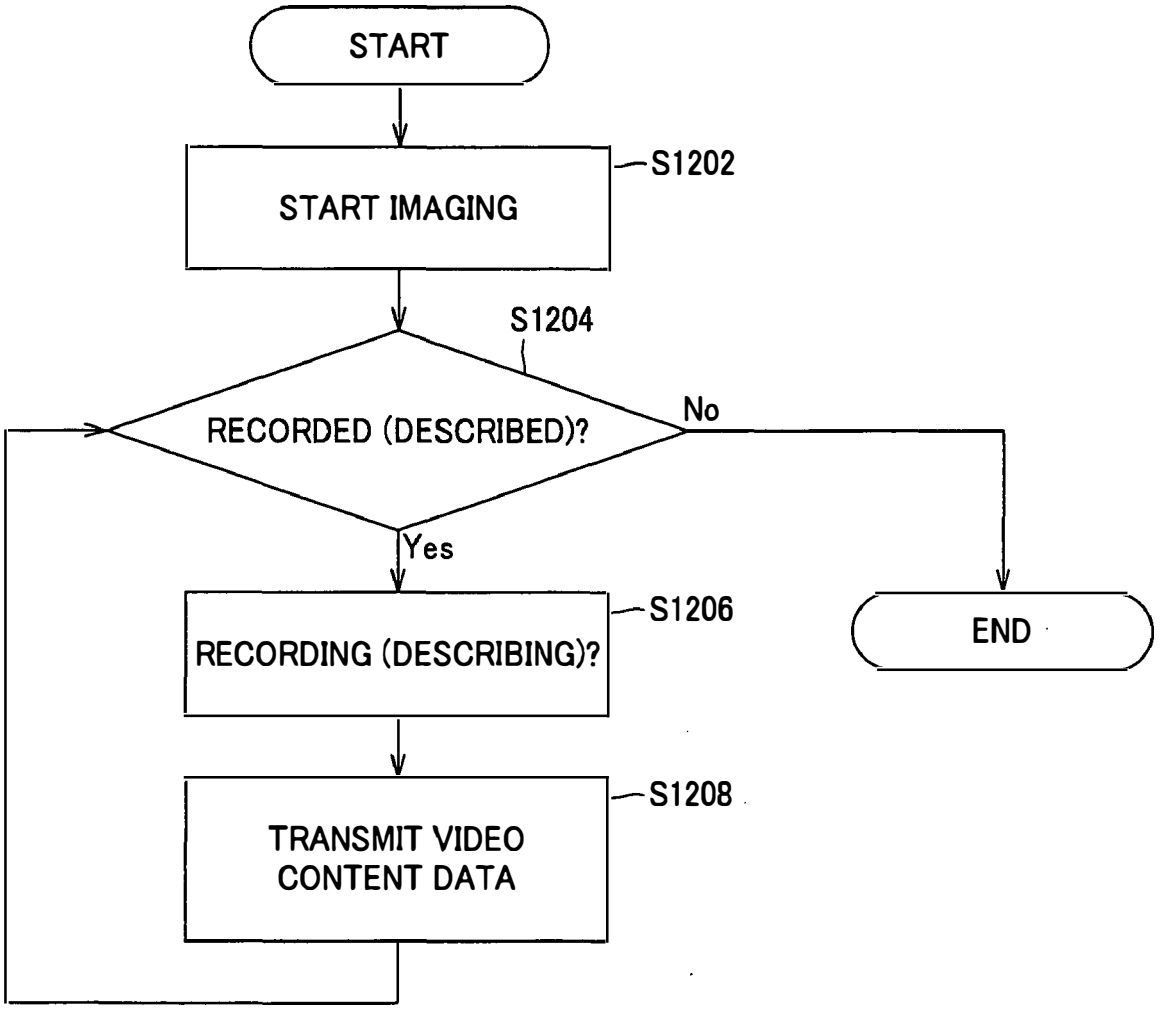
START
START IMAGING
S1202
S1204
RECORDED (DESCRIBED)?
No
Yes
RECORDING (DESCRIBING)?
S1206
END
TRANSMIT VIDEO CONTENT DATA
S1208

FIG. 13

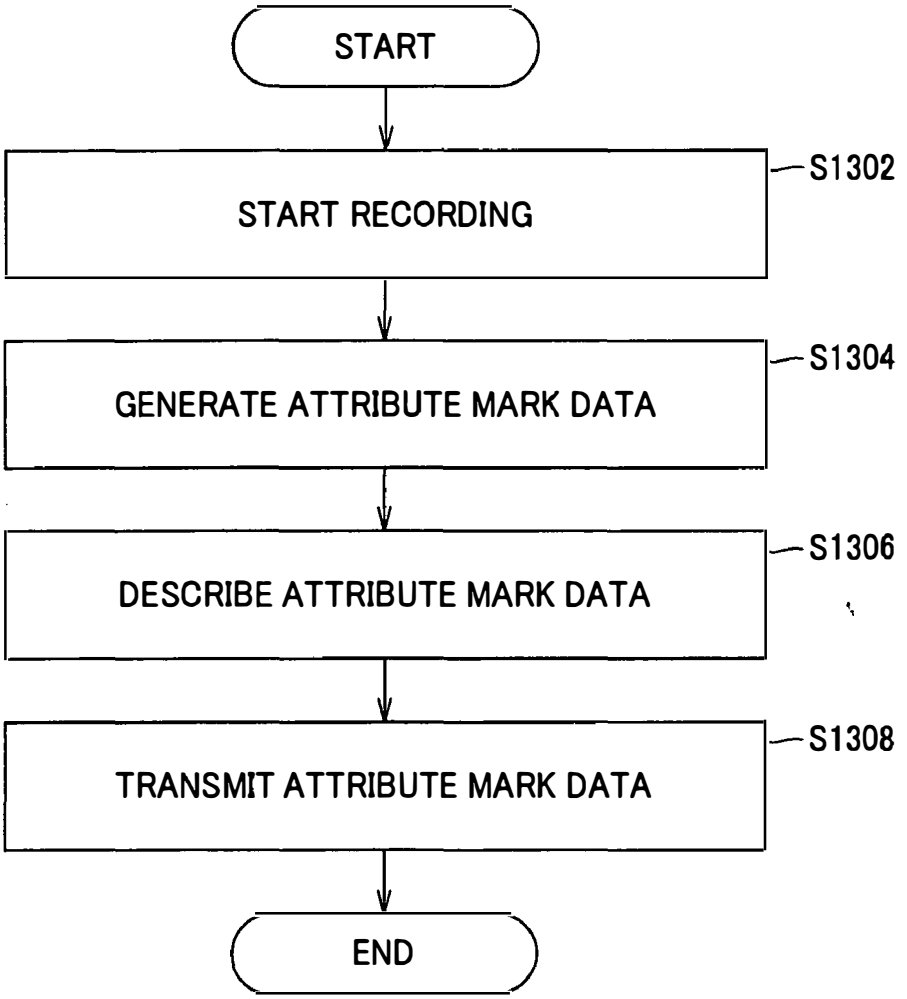
START
START RECORDING
S1302
GENERATE ATTRIBUTE MARK DATA
S1304
DESCRIBE ATTRIBUTE MARK DATA
S1306
TRANSMIT ATTRIBUTE MARK DATA
S1308
END

FIG. 14

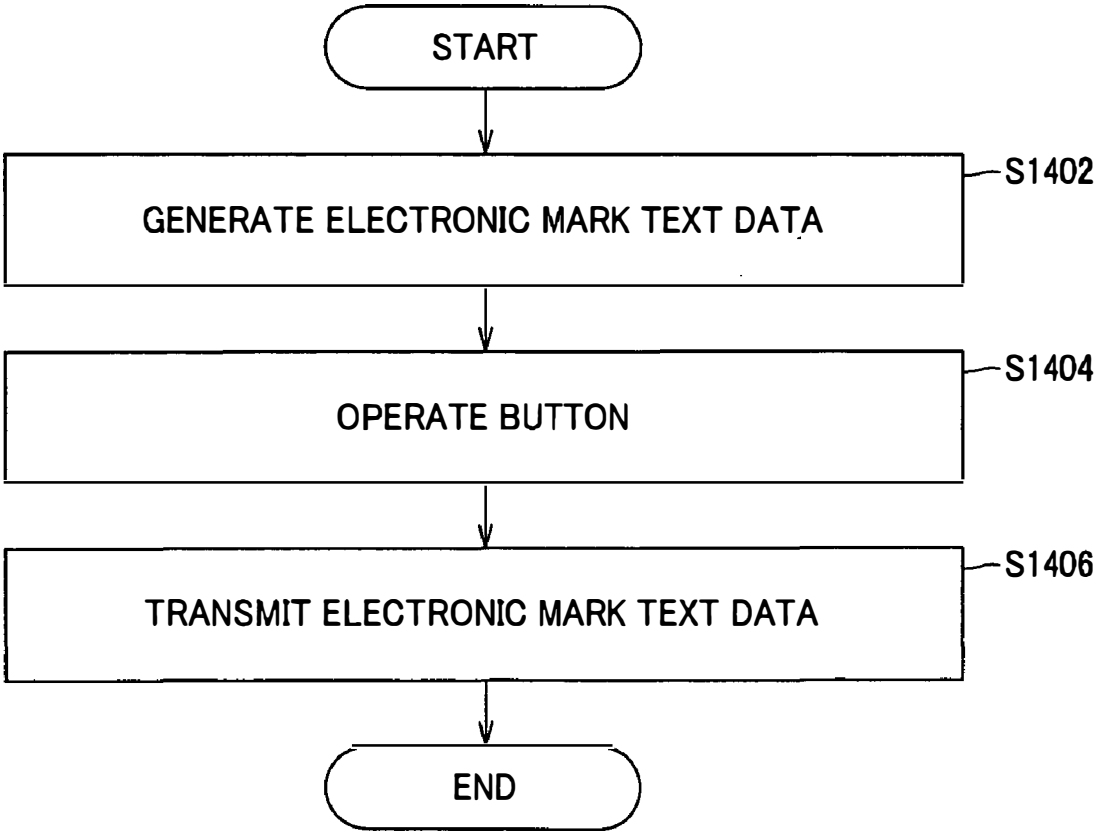
START
GENERATE ELECTRONIC MARK TEXT DATA
S1402
OPERATE BUTTON
S1404
TRANSMIT ELECTRONIC MARK TEXT DATA
S1406
END

FIG.15

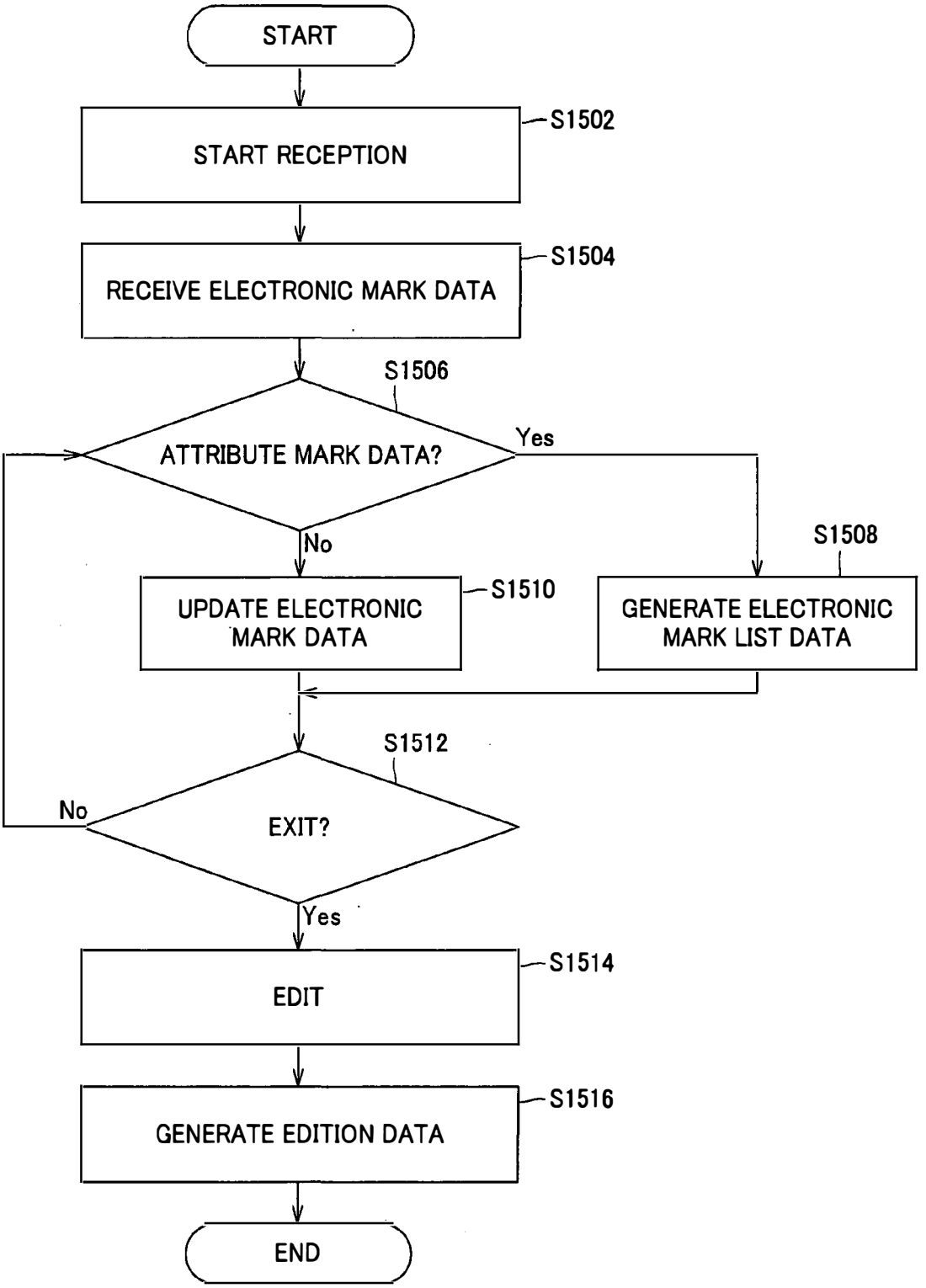
START
START RECEPTION
S1502
RECEIVE ELECTRONIC MARK DATA
S1504
S1506
ATTRIBUTE MARK DATA?
Yes
No
S1508
UPDATE ELECTRONIC MARK DATA
S1510
GENERATE ELECTRONIC MARK LIST DATA
S1512
No
EXIT?
Yes
EDIT
S1514
GENERATE EDITION DATA
S1516
END

FIG. 16

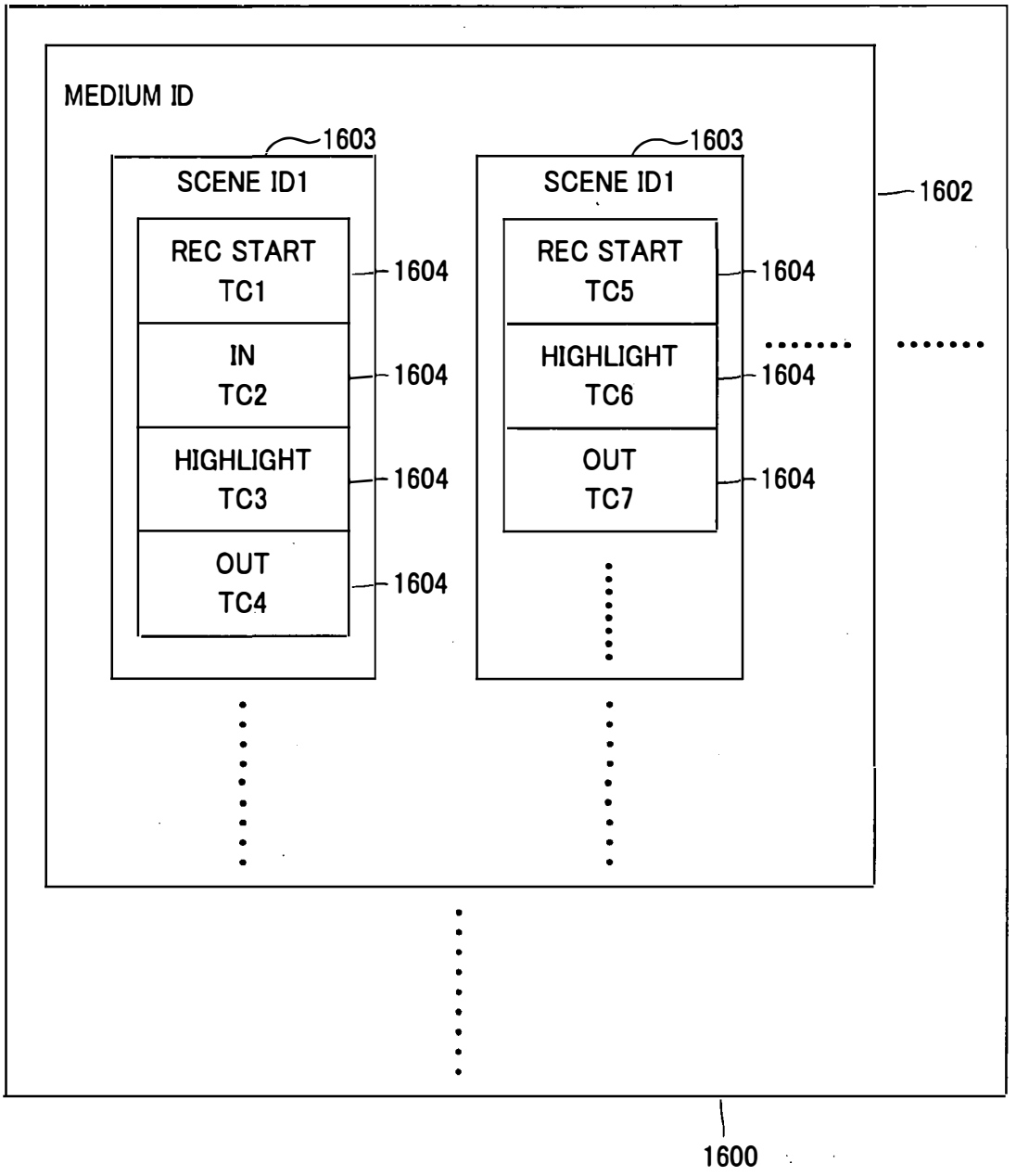
MEDIUM ID
1603
SCENE ID1
REC START
TC1
IN
TC2
HIGHLIGHT
TC3
OUT
TC4
1604
1603
SCENE ID1
REC START
TC5
HIGHLIGHT
TC6
OUT
TC7
1604
1602
1600

FIG. 17

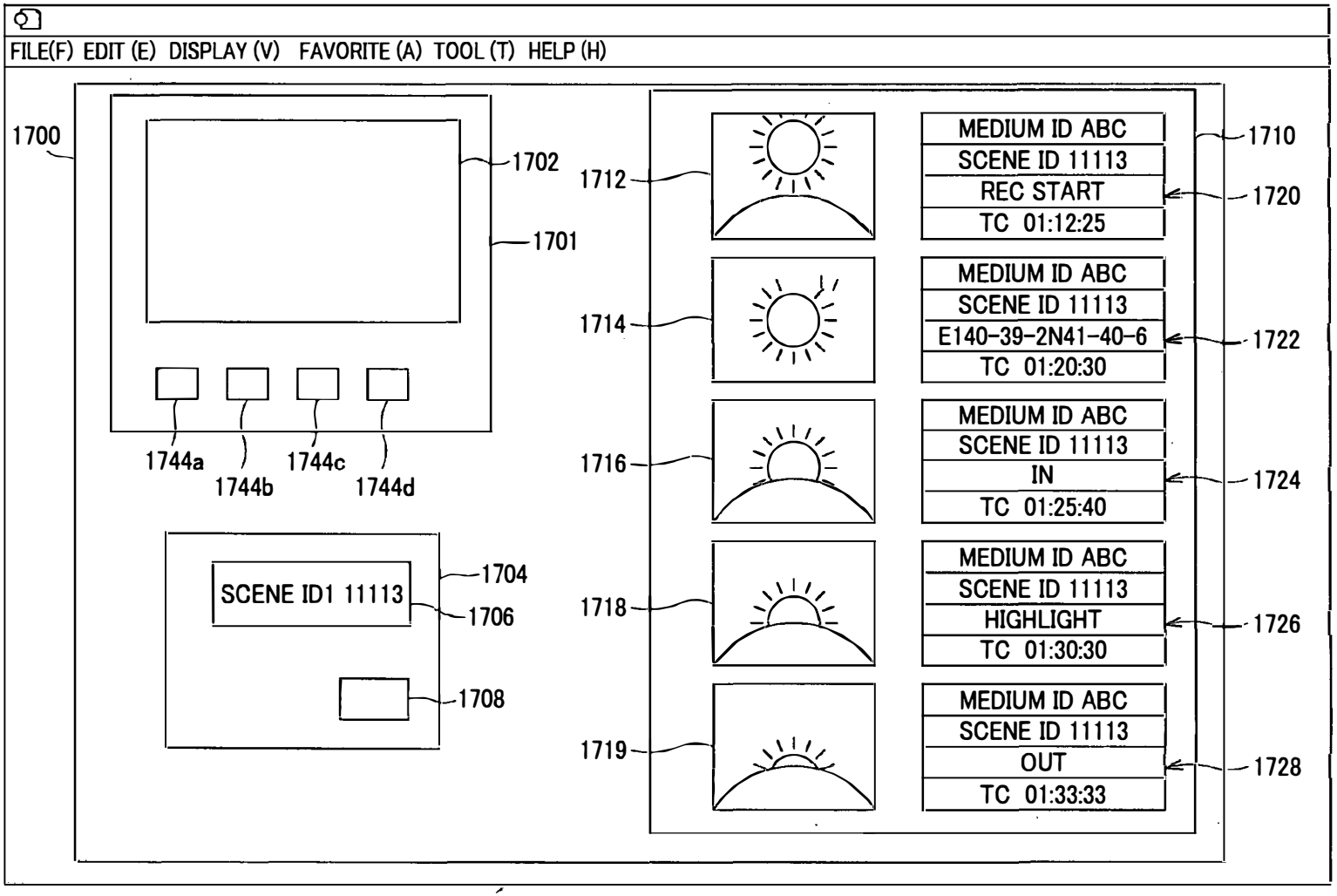
FILE(F) EDIT (E) DISPLAY (V) FAVORITE (A) TOOL (T) HELP (H)
1700
1702
1701
1744a
1744b
1744c
1744d
SCENE ID1 11113
1704
1706
1708
1712
1714
1716
1718
1719
MEDIUM ID ABC
SCENE ID 11113
REC START
TC 01:12:25
MEDIUM ID ABC
SCENE ID 11113
E140-39-2N41-40-6
TC 01:20:30
MEDIUM ID ABC
SCENE ID 11113
IN
TC 01:25:40
MEDIUM ID ABC
SCENE ID 11113
HIGHLIGHT
TC 01:30:30
MEDIUM ID ABC
SCENE ID 11113
OUT
TC 01:33:33
1710
1720
1722
1724
1726
1728

FIG. 18

VIDEO CONTENT EDITION SUPPORT SYSTEM AND VIDEO CONTENT EDITION SUPPORT METHOD

TECHNICAL FIELD

[0001] The present invention relates to a video content edition support system and method for supporting the edition of a video content.

[0002] This application claims the priority of the Japanese Patent Application No. 2002-104179 filed on Apr. 5, 2002, the entirety of which is incorporated by reference herein.

BACKGROUND ART

[0003] The TV (television) news programs and the like are edited video content data as content materials captured at a news data gathering site. The edition of video content includes off-line editing and on-line editing. The on-line editing is to produce final video content data (complete package) as a finished piece from video content data off-line edited for each scene.

[0004] The off-line editing is effected before the online editing to select necessary video scenes for the on-line editing from video scenes included in just captured video content data as material data, recording temporal positions (time codes) including an edition start position (In point) and edition end position (Out point) in a paper medium for ingesting to-be-used portions of the selected video scenes and ingesting the necessary video scenes.

[0005] After completion of the data capture, the video content data recorded in a recording medium such as a magnetic tape or the like is repeatedly replayed from the beginning of the video content data and rewound by a recorder/player (VTR: video tape recorder). With these operations, the editor selects desired video scenes, and the captured video content data are thus off-line edited.

[0006] Further, the to-be-used portions of the selected video scenes are determined based on the edition start position (In point) and edition end position (Out point). Also, the time codes are recorded in the paper medium to prepare a time codes list.

[0007] Therefore, since the recording medium having recorded therein video scenes included in video content data has to be repeatedly replayed and rewound, the selection (logging) of video scenes and extraction (logging) of to-be-used portions from the selected video scenes, namely, the off-line editing of the video scenes, cannot be done efficiently.

DISCLOSURE OF THE INVENTION

[0008] Accordingly, the present invention has an object to overcome the above-mentioned drawbacks of the related art by providing a novel and improved video content edition support system and method.

[0009] It is another object to provide a video content edition support system and method in which necessary video scenes can be logged and ingested by retrieving indexes related to pre-described video scenes to make off-line editing of video content data.

[0010] The above object can be attained by providing a video content edition support system including an imaging device to record captured video content data to a recording medium, an editor's terminal unit to display video content data transmitted from the imaging device and a network to connect the imaging device and editor's terminal unit to each other, the system including according to the present invention:

[0011] a recorder to describe electronic mark data related to the video content data in the video content data;

[0012] an electronic mark list generator to generate electronic mark list data including header information on the video content data; and

[0013] an edition unit to edit the video content data on the basis of the electronic mark list data.

[0014] In the above video content edition support system according to the present invention, the video content data is described whose feature has been set with respect to the video content data to generate the electronic mark list data including the header information in which the feature of at least the video content data. Thus, necessary video content data can be selected based on the header information in which the feature of the video content data included in the electronic mark list data is described to edit the video content data directly, and information on the to-be-edited video content is always collected in the electronic mark list data.

[0015] Note that the recorder to describe the electronic mark data related to the video content data in the electronic content data may be provided in either the imaging device or editor's terminal unit.

[0016] The electronic mark list generator to generate electronic mark list data including the header information on the video content data on the basis of the electronic mark data may be provided in either the imaging device or editor's terminal unit.

[0017] Further, the edition unit to edit video content data on the basis of electronic mark list data may be provided in either the imaging device or editor's terminal unit.

[0018] The recorder may be designed to describe electronic mark data in video content data captured on the real-time basis. With the recorded thus designed, electronic mark list data including header information on video content data on necessary video content data for the edition can be generated and the video content data can be edited in parallel with imaging, by describing electronic mark data in the video content data captured on the real-time basis.

[0019] The header information on the video content data may be constructed to be header information on the video scenes included in the video content data. With this data structure, header information can be described in more than one or two video scenes included in the video content data, and a feature is described in detail for each of the video scenes.

[0020] The electronic mark data may be constructed to include attribute mark data being attribute information on capturing at least video content data, and electronic mark text data in which a feature of the video content data is

described. With this data structure, electronic mark data includes attribute mark data and electronic mark text data liked to each other, and since the attribute mark data is described in the video content data, information in the electronic mark data can be distributed by storing the electronic mark text data in the electronic mark data into another recording medium.

[0021] The attribute mark data may be constructed to include scene identifiers for identification of video scenes in at least video content data. With this data structure, the attribute mark data linked to the electronic mark data permits to identify more than one or two video scenes included in the video content data and thus the electronic mark text data linked to the electronic mark data related with each video scene can be distributed to another recording medium.

[0022] The electronic mark text data may be constructed to have described therein a feature, location of imaging or date of imaging of each video scene included in at least video content data with text data. With this data structure, setting, in the electronic mark text data, header information (index information) including useful text data or the like as the feature of the video content data permits to retrieve an object video content data by visually recognizing electronic mark data or taking the electronic mark text data as a keyword.

[0023] The recorder may be designed to record electronic mark data along the helical track on the recording medium. With this design, it is possible to increase the volume of information which can be described as electronic mark data.

[0024] The edition unit may be designed to generate edition information data on the basis of edited video content data. With this design, the efficiency of operations down to the on-line editing can be improved by generating, before the on-line editing, edition information data including time codes indicating edition start and end positions of to-be-used video scenes in the video content data in advance.

[0025] The electronic mark data may be constructed so that it can be generated based on an input voice. With this data structure, electronic mark data can be generated from user's voice or sound and described in video content data.

[0026] Also, the above object may be attained by providing an imaging device connected to an editor's terminal unit which displays video content data via a network and which records captured video content data to a recording medium, the device including, according to the present invention, a recorded to describe electronic mark data related to video content data in the video content data.

[0027] The above imaging device according to the present invention describes electronic mark data in which a feature of video content data is set in the video content data. With this design, electronic mark data as an index indicating the feature of the video content data and video content data can be correlated with each other.

[0028] The recorder may be designed to describe captured video content data and electronic mark data on the real-time basis. With this recording design, description of electronic mark data in real-time captured video content data permits to generate electronic mark list data including header information on necessary video content data for the edition and edit the video content data in parallel with imaging.

[0029] The header information on the video content data may be constructed to be the header information on the video scenes included in the video content data. With this data structure, header information can be described in more than one or two video scenes included in the video content data, and a feature is described in detail for each of the video scenes.

[0030] Electronic mark data may be constructed to include attribute mark data being attribute information on capturing at least video content data, and electronic mark text data in which a feature of the video content data is described. With this data structure, electronic mark data includes attribute mark data and electronic mark text data liked to each other, and since the attribute mark data is described in the video content data, information in the electronic mark data can be distributed by storing the electronic mark text data in the electronic mark data into another recording medium.

[0031] The attribute mark data may be constructed to include scene identifiers for identification of video scenes in at least video content data. With this data structure, the attribute mark data linked to the electronic mark data permits to identify more than one or two video scenes included in the video content data and thus the electronic mark text data linked to the electronic mark data related with each video scene can be distributed to another recording medium.

[0032] The electronic mark text data may be constructed to describe a feature, location of imaging or date of imaging of each video scene included in at least video content data with text data. With this data structure, setting, in the electronic mark text data, header information (index information) including useful text data or the like as the feature of the video content data permits to retrieve an object video content data by visually recognizing electronic mark data or taking the electronic mark text data as a keyword.

[0033] The recorder may be designed to record electronic mark data along the helical track on the recording medium. With this design, it is possible to increase the volume of information which can be described as electronic mark data.

[0034] The electronic mark data may be constructed so that it can be generated based on an input voice. With this data structure, electronic mark data can be generated from user's voice or sound and described in video content data.

[0035] Also the above object can be attained by providing a video content edition support method in which there are used an imaging device to record captured video content data to a recording medium and an editor's terminal unit to display video content data transmitted from the imaging device connected via a network to connect the imaging device and editor's terminal unit to each other, the method including, according to the present invention, the steps of:

[0036] describing electronic mark data related to the video content data in the video content data;

[0037] generating electronic mark list data including header information on the video content data; and

[0038] editing the video content data on the basis of the electronic mark list data.

[0039] The electronic mark data may be constructed so that it will be described along with the captured video content data. With this data structure, the electronic mark data is described and recorded in a recording medium in parallel to recording of the captured video content data.

[0040] The header information on the video content data may be constructed to be header information on a video scene included in the video content data.

[0041] The Electronic mark data may be constructed to include attribute mark data being attribute information on capturing at least video content data, and electronic mark text data in which a feature of the video content data is described.

[0042] The attribute mark data may be constructed to include scene identifiers for identification of video scenes in at least video content data.

[0043] The electronic mark text data may be constructed to describe a feature, location of imaging or date of imaging of each video scene included in at least video content data with text data.

[0044] The electronic mark data may be designed for recording along the helical track on the recording medium.

[0045] The edition information data may be constructed so that it can be generated on the basis of edited video content data.

[0046] The electronic mark data may be constructed so that it can be generated based on an input voice.

[0047] These objects and other objects, features and advantages of the present invention will become more apparent from the following detailed description of the best mode for carrying out the present invention when taken in conjunction with the accompanying drawings.

BRIEF DESCRIPTION OF THE DRAWINGS

[0048] **FIG. 1** is a schematic block diagram of the video content edition support system according to the present invention.

[0049] **FIG. 2** is a schematic block diagram of an editor's terminal unit included in the video content edition support system according to the present invention.

[0050] **FIG. 3** is a schematic block diagram of an imaging device included in the video content edition support system according to the present invention.

[0051] **FIG. 4** explains an example of the format of UMID data coded in the video content edition support system according to the present invention.

[0052] **FIG. 5** explains an example of the format of electronic mark text data coded in the video content edition support system according to the present invention.

[0053] **FIG. 6** schematically illustrates the construction of a recording medium used in the video content edition support system according to the present invention.

[0054] **FIG. 7** explains an example of the format of a time code recorded on the time code track on the recording medium used in the video content edition support system according to the present invention.

[0055] **FIG. 8** schematically illustrates the structure of an AUX signal field of the helical track on the recording medium used in the video content edition support system according to the present invention.

[0056] **FIG. 9** schematically illustrates the structure of a user data part of the AUX signal field on the helical track on the recording medium used in the video content edition support system according to the present invention.

[0057] **FIG. 10** schematically illustrates the construction of a recording medium having described therein electronic mark data in the video content edition support system according to the present invention.

[0058] **FIG. 11** schematically illustrates the construction of the recording medium having described therein electronic mark data in the video content edition support system according to the present invention.

[0059] **FIG. 12** schematically illustrates the construction of an optical disk having described therein electronic mark data in the video content edition support system according to the present invention.

[0060] **FIG. 13** shows a flow of operations made in recording data by the imaging device included in the video content edition support system according to the present invention.

[0061] **FIG. 14** shows a flow of operations made in describing attribute mark data by the imaging device included in the video content edition support system according to the present invention.

[0062] **FIG. 15** shows a flow of operations made in describing electronic mark text data by the imaging device included in the video content edition support system according to the present invention.

[0063] **FIG. 16** shows a flow of operations made in receiving electronic mark data by the editor's terminal unit included in the video content edition support system according to the present invention.

[0064] **FIG. 17** schematically illustrates the structure of electronic mark list data in the video content edition support system according to the present invention.

[0065] **FIG. 18** explains an example of the edition screen displayed at the editor's terminal unit included in the video content edition support system according to the present invention.

BEST MODE FOR CARRYING OUT THE INVENTION

[0066] The present invention will be described in detail below concerning the embodiments thereof with reference to the accompanying drawings. It should be noted that in the following illustration and description, the components of which the functions and constructions are generally equal to each other will be indicated with the same references and any overlapping description thereof will be omitted.

[0067] Referring now to **FIGS. 1, 2** and **3**, there is schematically illustrated in the form of block diagrams the video content edition support system according to the present invention. **FIG. 1** is a schematic block diagram of the video content edition support system according to the

present invention, **FIG. 2** is a schematic block diagram of an editor's terminal unit, indicated with a reference **4**, included in the video content edition support system according to the present invention, and **FIG. 3** is a schematic block diagram of an imaging device, indicated with a reference **2**, included in the video content edition support system according to the present invention.

[**0068**] In the video content edition support system, the imaging device **2** such as a video camera or the like is interconnected to the editor's terminal unit **4** including any one or more of a portable computer **6**, mobile phone **8** or personal digital assistants (will be referred to as "PDA" hereunder) **10** by a network **16** as shown in **FIG. 1**.

[**0069**] The imaging device **2** may not be necessarily a single unit but it may be multiple ones. In case imaging devices **2** are used, they are connected to a plurality of editor's terminal units **4** in a peer-to-peer manner via a network **16**.

[**0070**] By providing a server (not shown) between the imaging device **2** and editor's terminal unit **4**, it is possible to build a client/server network in which the imaging devices **2** and editor's terminal units **4** are handled as clients in place of the above-mentioned peer-to-peer network.

[**0071**] The imaging device **2** is a video camera such as a camcorder and used for recording a content such as data as a news for broadcasting, observations of a sports game or a movie.

[**0072**] With a recording medium **14** set in the imaging device **2** as shown in **FIG. 1**, the imaging device **2** can record video content data to the recording medium **14**. It should be noted that the recording medium **14** used in this embodiment of the present invention is a medium such as a magnetic tape. The magnetic tape is for example a video tape of a D10-use digital VTR format type. The recording medium **14** may be an optical disk, magnetic disk or hard disk as well as the magnetic tape.

[**0073**] The imaging device **2** can record material data (video content data) picked up in gathering material data on, or covering, an event or the like to the recording medium **14** such as a magnetic tape, and cal also replay recorded video content data.

[**0074**] Video content data is still image data such as a photo, painting or the like, moving picture data such as a movie, theatrical performance or the like, audio data such as a radio program or the like, or a combination of them.

[**0075**] In an off-line editing, video scenes (cuts) for use in an on-line editing are logged from more than one or two video scenes included in video content data, an edition start position (In point) or edition end position (Out point) of a to-be-used part of the logged video scenes is set for edition of the logged video scenes, and video scenes are ingested for the on-line editing. After this off-line editing, complete package data is produced as a program to be broadcast (in the on-line editing).

[**0076**] Conventionally, the recording medium **14** having video content data (material data to be recorded) recorded therein is replayed from the beginning of the video content, and an edition position being an In point or Out point of a video scene which will be used is manually determined based on time codes recorded in the recording medium **14** and the complete package data are recorded in a paper medium or the like. It should be noted that the time codes will be described in detail later.

[**0077**] The editor's terminal unit **4** receives video content data captured by the imaging device **2** via the network **16** at any time on the real-time basis, and displays the captured video content data on a display unit or the like. Therefore, a content captured by a photographer can be checked from the same point of view as that of the photographer in a place apart from the imaging device **2**. It should be noted that the editor's terminal unit **4** can also receive all recorded video content data collectively.

[**0078**] The network **16** is a radio channel as defined in the standard IEEE 802.11a etc. or an RS-232C cable. Also, it may be a radio channel by a satellite communication or a cable such as an optical fiber.

[**0079**] Next, the electronic mark data included in the present invention will be described.

[**0080**] The electronic mark data is described (recorded) in video content data such as video or audio data and associated with the video content data (that is, metadata).

[**0081**] The electronic content data is transmitted by SDI (serial digital interface) on the basis of the SMPTE (Society of Motion Picture and Television Engineers).

[**0082**] The electronic content data includes of attribute mark data and electronic mark text data. The attribute mark data includes a recording medium identifier for identification of the recording medium **14**, video scene identifier for identification of more than one or two video scenes included in video content data, etc.

[**0083**] The attribute mark data identifies a video scene in video content data with the use of UMID (unique material identifier). It should be noted that UMID will be described in detail later.

[**0084**] The electronic mark text data represents, by text data, a location of imaging, identified by GPS (global positioning system) or the like, a magnification of a camera included in the imaging device, feature of a video scene, date of imaging, etc. Electronic mark data can be visually recognized based on header information formed from the text data or object video content data can be retrieved with the electronic mark text data being taken as an indexing keyword.

[**0085**] By indexing the electronic mark data described in the video content data in the off-line editing, it is possible to select a video scene including object video data or audio data. Thus, video scenes necessary for the on-line editing can efficiently be selected in advance without having to repeatedly replay the video content data by a recorder/player (VTR).

[**0086**] Next, the electronic mark text data will be explained with reference to **FIG. 5**. **FIG. 5** explains a format of electronic mark text data included in the present invention and coded with KLV (key length value).

[**0087**] The electronic mark text data is text data having described therein the feature or essence of a video scene. It is metadata associated (linked) with the aforementioned attribute mark data. For example, the features of a video scene such as "highlight", "OK", "NG" and the like and

information including a location of imaging such as "Tokyo" or "Japan" are described by text data in the electronic mark text data.

[0088] As shown in **FIG. 5**, when electronic mark text data is to be transmitted via the network, it has to be KLV-coded. The KLV-coded electronic mark text data includes a maximum of 49 bytes. The format of the KLV-coded electronic mark text data is in compliance with the SMPTE 335M/RP210A (metadata dictionary).

[0089] The KLV-coded electronic mark text data includes a "Key" part of 16 bytes, "L (length)" part of 1 byte and a "Value" part of 32 bytes at maximum.

[0090] The "Key" part is an identifier to indicate a KLV-coded data item complying with SMPTE 335M/RP210A (metadata dictionary). It is an identifier to identify the electronic mark text data. Various values the identifier takes for various data items are defined in the metadata dictionary in SMPTE.

[0091] Further, an item named "Cataloguing, Indexing, Thesaurus or Gezertter system used" is defined in the SMPTE metadata dictionary as a one corresponding to the coding of the electronic mark text data included in the present invention.

[0092] In case the electronic mark text data is described by a 7 bit coded character set defined in ISO (International Organization for Standardization), the defined concrete values the identifier takes are represented in hexadecimal notation as 06(h) 0E(h) 2B(h) 34(h) 01(h) 01(h) 01(h) 01(h) 03(h) 02(h) 01(h) 02(h) 02(h) 00(h) 00(h) 00(h).

[0093] In case the electronic mark text data is described by UTF-16 (unicode), the concrete values the identifier takes are represented in hexadecimal notation as 06(h) 0E(h) 2B(h) 34(h) 01(h) 01(h) 01(h) 01(h) 03(h) 02(h) 01(h) 02(h) 02(h) 01(h) 00(h) 00(h).

[0094] The "L" indicates the length of data following the "L" part in bytes. In case the ISO 7-bit coded set is used in coding electronic mark text data, the maximum data length is 32 bytes (**20**(*h*)). In case UTF-16 (16 bit UCS Transformation Format) is used, the data length is limitless. It should be noted that USC (Universal Multiple-Octet Coded Character set) is a coded character set prepared by ISO and IEC (International Electrotechnical Commission) in cooperation with each other similarly to the ISO 7 bit coded character set.

[0095] The "Value" part is a field including text data where electronic mark text data is stored. In case UTF-16 is used, one character is represented by 2 bytes.

[0096] The KLV-coded electronic mark text data is transmitted by the method defined in the SMPTE standard. For example, in case the data is transmitted by SDI (serial digital interface), the KLV-coded electronic mark text data is stored into a V-ancillary area of video data.

[0097] Next, the UMID data will be explained with reference to **FIG. 4**. **FIG. 4** explains an example of the format of the UMID data coded in the video content edition support system according to the present invention. Similarly to the electronic mark text data, the UMID data has to be KLV-coded in case it is transmitted by SDI via the network.

[0098] The UMID data is an video content data (recorded material data) identifier standardized by SMPTE. Like the electronic mark text data, the UMIT data has to be KLV-coded for transmission by SDI or the like via the network.

[0099] As shown in **FIG. 4**, the KLV-coded UMID data is of 32 bytes in a format including a "Universal label" part, "L" part to indicate the data length of the remainder of the UMID data, an "Instance No." part, and a "Material No." part.

[0100] The "Universal label" is a unique identifier to identify data as SMPTE-defined one. It defines the type of a material to be identified on the basis of the UMID data.

[0101] The data length indicates those of the "Instance No." and "Material No.", and the UMID data has a unique value "13(h)" in hexadecimal notation.

[0102] The "Instance No." part is a field of 3 bytes for definition of a difference between material instances. For example, when the UMID data is original material data, the "Instance No." will be "00(h) 00(h) 00(h)". It should be noted that the "Instance No." is defined with the SMPTE-defined UMID data.

[0103] The "Material No." part is a field of 16 bytes for identification of a video scene formed from video content data. Therefore, with the "Material No." for the UMID data, it is possible to identify a video scene formed from video content data recorded in a recording medium.

[0104] Therefore, since the "Material No." in the UMID data identifies a video scene, an object video frame can be ingested from video content data on the basis of "Material No." in the UMID data.

[0105] As shown in **FIG. 4**, the UMID data is KLV-coded. The KLV coding is a data encoding protocol defined SMPTE Standard 336M for Television.

[0106] The KLV-coded UMID data is transmitted to an external unit via the network by an SMPTE-defined method.

[0107] Next, the components of the video content edition support system according to the present invention will be explained with reference to **FIGS. 1, 2** and **3**.

[0108] The network **16** connects the imaging device **2** and editor's terminal unit **4** for two-way communications between them. According to the present invention, it is a radio communication network as defined in the IEEE 802.11a Standard. However, the network **16** may be a one capable of radio or cable communication including cable communication by RS-232C, satellite communication or an optical communication using optical fibers.

[0109] The editor's terminal unit **4** is an information processing unit including at least a central processing unit (CPU), communication unit and a storage unit. It is generally a computer device. As shown in **FIG. 1**, the editor's terminal unit **4** may be a lap-top portable computer **6**, mobile phone **8** or a PDA (personal digital (data) assistants) **10**, for example.

[0110] The editor's terminal unit **4** can record video content data and electronic mark data real-time transmitted from the imaging device **2**. Also, it can be connected to the imaging device **2** via the network **16** and can make edition of data from the imaging device **2**, such as changing or addition of electronic mark data and also such as edition of video content data.

[0111] As shown in **FIG. 2**, the editor's terminal unit **4** includes a CPU (central processing unit) **23** capable of computing, a communication unit **21** for making data communications with the imaging device **2** via the network **16**, a display unit **22** to display video content data or the like, an input unit **24**, an electronic mark list generator **28** to generate electronic mark list data on the basis of electronic mark data, an edition unit **26** to edit electronic mark data or video content data, and a storage unit **20** using a recording medium (not shown) to store video content data etc.

[0112] The communication unit **21** sends and receives video content data or electronic mark data via the network **16**. It has also a video capture function to receive video content data and display an image on the display unit **22**.

[0113] The input unit **24** includes buttons, levers, keyboard or the like. In case the input unit has a keyboard, the editor or user can generate text data such as characters or the like by the keyboard. Also, it can be provided with an audio input terminal or the like (not shown) which can be supplied with sounds from an external microphone, and convert the sounds into text data.

[0114] Next, the imaging device **2** will be explained in detail with reference to **FIG. 3**. **FIG. 3** is a schematic block diagram of the imaging device **2** included in the video content edition support system according to one embodiment of the present invention.

[0115] The imaging device **2** has a function to capture an object, record the captured video content data into the recording medium **14** and replay the video content data recorded in the recording medium **14**. It is a camcorder as an integrated combination of a camera and VTR (video tape recorder).

[0116] As shown in **FIG. 3**, the imaging device **2** includes a recorder/player unit for video and audio data, a communication unit **75** to make data communications with an external unit such as the editor's terminal unit **4**, a controller **76**, a mark setting block for describing electronic mark data, and a mark ingesting block to ingest electronic mark data.

[0117] The controller **76** has a data storing function, and is connected to the stationary head **55**, rotary head unit **37**, CPU **67**, recorder **54** and communication unit **75** to control data or signals to be sent and received.

[0118] The above recorder/player block includes a digital signal recorder **71**, digital signal player **72**, analog audio signal recorder **73**, analog audio signal generator **74**, stationary heads **55** and **38** for recording/playing a time code, capstan motor **35**, drum motor **36**, rotary head assembly **37** to write/read video and audio data, and a motor controller **34**.

[0119] The recorder/player block converts video content data including video or audio data picked up from an object into video or audio signal, and records or reads the video and audio signal as video or audio data. Electronic mark data generated by the mark setting block is described in place in video content data in the recording medium **14**.

[0120] Further, the imaging device **2** includes a control switch **32** to set an operation mode and the like in which it switches on the imaging device **2** for recording or playing. The control switch **32** is connected to an operation controller **33**. The operation controller **33** generates moor control signal MC and mode signal MS on the basis of an operation mode signal CT set by the control switch **32** or on the basis of an operation mode signal CT supplied from the communication unit **75**.

[0121] The motor control signal MC is transmitted to the motor controller **34**, and the mode signal MS is transmitted to the recorder **54**, player **61**, digital signal recorder **71**, digital signal player **72**, analog audio signal recorder **73**, analog audio signal generator **74** and also to a monostable multivibrator **17**.

[0122] The motor controller **34** generates a motor drive signal MD on the basis of the supplied motor control signal MC. Upon arrival of the motor control signal MD at the capstan motor **35** and drum motor **36**, a magnetic tape as the recording medium **14** is fed and the rotary head assembly **37** with a plurality of heads is rotated.

[0123] As being rotated, the rotary head assembly **37** describes electronic mar data in video content data, and records the video content data having the electronic mark data thus described therein to the recording medium **14**.

[0124] The mark setting block includes a set switch **40**, data signal generator **41**, time code data holder **42**, user data holder **43**, record start data holder **44**, electronic mark test data holder **45**, attribute mark data holder **78**, monostable multivibrators **51** and **47**, signal select switches **19** and **77**, marker button **50**, signal modulator **53**, recorder **54** and a microphone sound-converter **79**.

[0125] The mark setting block generates electronic mark text data and attribute mark data in response to time code data synchronous with a frame of video content data recorded in the recording medium **14** and an input from the marker button **50** or microphone sound-converter **79**. It should be noted that the time code data will be described in detail later.

[0126] The set switch **40** sets whether a time of imaging, patterns (types) of electronic mark text and attribute mark included in electronic mark data, GPS information as results of measurement of position, orientation and altitude of a location of imaging, etc. are to be recorded or not, and transmits a set signal SS to the data signal generator **41** as a means for generating a pattern.

[0127] The data generator **41** generates time code data DT, user data DU, electronic mark text data DM and attribute mark data DZ on the basis of the set signal SS supplied from the set switch **40**. The time code data DT thus generated is held in the time code data holder **42** while being transmitted to the signal modulator **53**. Also, the user data DU is held in the user data holder **43** while being transmitted to a terminal a of the signal select switch **49**. The electronic mark text data DM is held in the electronic mark text data holder **45** while being transmitted to a terminal b of the signal select switch **77**. The attribute mark data DZ is held in the attribute mark data holder **78** while being transmitted to the terminal a of the signal select switch **77**.

[0128] The marker button **50** is to be used (pressed) for describing (recording) electronic mark text data included in the electronic mark data. The marker button **50** is composed of more than one or two buttons.

[0129] There will be explained below capturing and recording of a video material in case the marker button **50**

is composed of a plurality of buttons, for example. When one of the buttons is pressed for a "highlight" scene, text data and a "highlight" mark for "highlight" electronic mark text data are described in the recording medium **14** or the like.

[**0130**] If an "In" button is included in the plurality of buttons and when it is pressed, an "In" mark for electronic mark text data in which text data is "In" will be described as above. Also if an "Out" button is included and when it is pressed, an "Out" mark for electronic mark text data in which text data is "Out" will be described. The type of the marker button **50** can be varied at any time depending upon an object to be captured and purpose of material data gathering.

[**0131**] The microphone sound-converter **79** is used, like the marker button **50**, to record electronic mark text data and attribute mark data included in electronic mark data. A sound supplied to the microphone sound-converter **79** will be recognized by the latter and converted into text data. The text data is described as electronic mark text data or attribute mark data by the rotary head assembly **37** into video content data, and then recorded to the recording medium **14**. For example, a voice "highlight" supplied to the microphone sound-converter **79** will be recognized as a "highlight" mark for electronic mark text data, and "highlight" electronic mark text data will be described in the recording medium **14**.

[**0132**] The marker button **50** and microphone sound-converter **79** are input devices which are operated to describe the electronic mark text data and attributed mark data included in the electronic mark data in the video content data as above. When either the marker button **50** or microphone sound-converter **79** is operated and a control signal SG is transmitted to the monostable multivibrator **51**, a mark signal GW whose level is high "H" for a predetermined length of time is transmitted from the monostable multivibrator **51** to the signal select switch **77** and an OR circuit **52**. The signal select switch **77** has the moving terminal thereof controlled with the mark signal GW.

[**0133**] In the monostable multivibrator **47**, when the mode of operation is shifted to recording on the basis of the mode signal MS, there is generated a mode timing signal MT whose level is high "H" for a predetermined length of time. The mode timing signal MT is transmitted to the OR circuit **52**.

[**0134**] The OR circuit **52** transmits a signal MR to the signal select switch **49** which will thus have the moving terminal thereof controlled with the signal MR.

[**0135**] In the signal modulator **53**, the time code data DT supplied from the time code data holder **42** is automatically updated. The updated time code data DT is modulated along with data selected by the signal select switch **49** to provide a recording data signal WT. The recording data signal WT is transmitted to the recorder **54**.

[**0136**] The recorder **54** converts the supplied recording data signal WT into a recording data signal WS and transmits the recording data signal WS to the stationary head **55** and rotary head assembly **37** on the basis of the mode signal MS supplied from the operation controller **33**.

[**0137**] The rotary head assembly **37** describes attribute mark data and electronic mark text data included in electronic mark data into video content data, and records the video content data having the attribute mark data and electronic mark text data described therein to a helical track **82** on the recording medium **14**.

[**0138**] The stationary head **55** describes the time code data into the video content data, and records the video contact data having the time code data described therein to a time code track TC on the recording medium **14**.

[**0139**] The mark ingesting block includes the player **61**, data separator **62**, data holder **63**, user area data holder **64**, comparison pattern generator **66**, pattern comparator **65**, CPU **67**, display unit **68** and a select/set switch **69**.

[**0140**] The mark ingesting block ingests electronic mark text data or attribute mark data recorded in video content data by replaying the recording medium **14**.

[**0141**] The player **61** is connected to the stationary head **55** and rotary head assembly **37** which read a signal for reading video data or audio data ingested from the video content data. It converts a read signal RS from the stationary head **55** into a read video content data signal RT and transmits the data signal RT to the data separator **62**.

[**0142**] The data separator **62** separates the read video content data signal RT into video content data DT and user data DE stored in an AUX signal field **83** on a helical track **82**. It should be noted that the helical track **82** and AUX signal field **83** will be described in detail later.

[**0143**] The separated video content data DT is transmitted to the data holder **63** where it will be held until a next video content data is transmitted. Also, the held video content data DT is transmitted to the CPU **67**.

[**0144**] The user data DE is held in the user area data holder **64**. The user data DE held in the user area data holder **64** is transmitted to the pattern comparator **65** and CPU **67**.

[**0145**] The display unit **68** includes a liquid crystal display or the like, and displays the electronic mark text data and attribute mark data included in electronic mark data, time code data, video content data, etc.

[**0146**] The pattern comparator **65** is connected to the comparison pattern generator **66**. It make a comparison between attribute mark data DZ or electronic mark data DM generated by the comparison pattern generator **66** and the user data DE supplied from the user area data holder **64**, and transmits a comparison signal CC as the result of comparison to the CPU **67**.

[**0147**] The CPU **67** judges, based on the comparison signal CC supplied from the pattern comparator **65**, whether the attribute mark data DZ and user data DE are coincident with each other or whether the electronic mark data DM and user data DE are coincident with each other. When the result of judgment is affirmative, the CPU **67** will store the attribute mark data DZ or electronic mark text data DM into RAM while transmitting the data to the display unit **68** and controller **76**.

[**0148**] A video scene of video content data can be cued up correspondingly to the attribute mark data DZ or electronic mark data DM thus simply designated.

[**0149**] Note that the digital signal recorder **71** converts digital video and audio signals into a recording signal. Also,

this recording signal is transmitted to the rotary head assembly **37** on the basis of a mode signal MS supplied from the operation controller **33**. The rotary had unit **37** records a signal of video content data to the recording medium **14** which is a magnetic tape.

[**0150**] Further, the digital signal recorder **71** transmits the recording signal to the controller **76** in order to send captured video content data to the editor's terminal unit **4**. The transmitted recording signal is converted for display at the editor's terminal unit **4** before it is sent from the communication unit **75** to the editor's terminal unit **4**.

[**0151**] A read signal generated by the rotary head assembly **37** which plays back the recording medium **14** is transmitted to the digital signal player **72** where it will be converted into video content data of digital video and audio signals and transmitted to the player **61** and controller **76**.

[**0152**] The analog audio signal recorder **73** converts an analog audio signal into a recording signal. The recording signal is transmitted and recorded to the stationary head **38** or controller **76** on the basis of a mode signal MS supplied from the operation controller **33**. The recording signal from the recording medium **14** or controller **76** is transmitted to the analog audio signal player **74** where it will be converted into an analog audio signal.

[**0153**] First, the recording medium **14** to which electronic mark data and video content data are to be recorded will be explained with reference to **FIG. 6**. **FIG. 6** schematically illustrates the construction of the recording medium **14** used in the video content edition support system according to the present invention.

[**0154**] As shown in **FIG. 6**, the recording medium **14** includes the helical track **82** formed on a magnetic tape by a helical scan in a direction R_1 in which the rotary head assembly **37** travels, a control track CTL formed longitudinally of the tape, and a time code track TC being a time base synchronous with video content data. It should be noted that "T" in **FIG. 6** indicates a direction T_1 in which the magnetic medium travels.

[**0155**] The helical track **82** is so standardized by SMPTE that one frame of video data is recorded to a set of 10 or 12 helical tracks, for example.

[**0156**] The helical track **82** includes a video signal field **80** recorded as video data, an audio signal field **81** recorded as audio data, and the AUX (auxiliary) signal field **83**.

[**0157**] The AUX signal field **83** includes a "Header" part, "System" part of 5 bytes, "User data" part of 104 bytes, "Reserve" part of 35 bytes, and a "Parity" part of 12 bytes as shown in **FIG. 8**.

[**0158**] Further, the "User data" part of 104 bytes includes a "Header" part and "Electronic mark" part as shown in **FIG. 9**. Electronic mark data including attribute mark data and electronic mark text data in this embodiment is recorded in the "Electronic mark" part. It should be noted that video and audio data may be recorded in an analog form. Also, video and audio data may be compressed on the basis of the MPEG-2 Standard, for example.

[**0159**] Time code data to be recorded to the time code track TC includes 80-bit frame areas each as one unit as shown in **FIG. 7**. Each frame area includes a synchronous signal area for recording a sync signal, eight time code recording bit areas for recording a time code (HH:MM:SS:FF) representing a hour (HH), minute (MM), second (SS) and frame (FF), and eight user's bit recording areas for recording user's bits (D1D2:C1C2:B1B2:A1A2).

[**0160**] As shown in **FIG. 7**, hours (HH) information in the time code is recorded in two bit areas (HH) represented by bits **48** to **51** and bits **56** to **59**, minutes (MM) information is recorded in two bit areas represented by bits **32** to **35** and bits **40** to **42**, seconds (SS) information is recorded in two bit areas represented by bits **16** to **19** and bits **24** to **26**, and frame (FF) information is recorded in two bit areas represented by bits **0** to **3** and bits **8** and **9**.

[**0161**] The recording medium **14** having electronic mark data marked (recorded) therein will be explained herebelow with reference to **FIG. 10**. **FIG. 10** schematically illustrates the construction of the recording medium **14** having described therein electronic mark.

[**0162**] The marker button **50** or microphone sound-converter **79** included in the imaging device **2** records, to the recording medium **14** or the like, electronic mark text data as an index used to retrieve a desired video scene included in the video content data for off-line editing.

[**0163**] In the course of imaging, the imaging device **2** marks electronic mark data directly to a video scene in the recording medium **14** for use in on-line editing as shown in **FIG. 10**.

[**0164**] First, when the imaging device **2** starts taking "Video scene **1**", there will be recorded in the "Electronic mark" part of the "User data" part in the AUX signal field **83** on the recording medium **14**"REC start"**100** indicating the start of recording, "Scene ID"**102** for identification of the "Video scene **1**", "IN"**104** indicating an In point, "Highlight"**106** indicating a highlight of the scene and "OUT"**108** indicating an Out point in this order in the playing direction, as shown in **FIG. 10**.

[**0165**] Synchronously with the description of the electronic mark data, "TC**1**""TC**2**", . . . , "TC**4**" and time code data are recorded to the time code track TC on the recording medium **14**.

[**0166**] Note that the scene identifier generically refers to a unique number, symbol or the line for identification of a video scene included in video content data, for example, "Scene ID".

[**0167**] Also, when the imaging device **2** starts taking a "Video scene **2**", there will be recorded in place "Scene ID"**110** for identification of the "Video scene **2**", "REC start"**112** indicating the start of recording, "OUT"**116** indicating an Out point (edition end point) or "Highlight"**114** indicating a highlight of the scene and their respective electronic mark data, as shown in **FIG. 10**.

[**0168**] Further, with the "Video scene **2**", time code data "TC**5**", "TC**6**" and "TC**7**" are recorded to the recording medium **14** synchronously with the description of the electronic mark data.

[**0169**] As shown in **FIG. 10**, text data registered in the electronic mark text data such as "REC start"**100**, "IN"**104**, etc. may be preregistered correspondingly to the imaging situations and the described text data be changed. For

example, electronic mark text data for "home run" indicating a video scene of a home run in a baseball game can be registered or other electronic mark text data can be changed to "home run".

[0170] Also, electronic mark data can be recorded to the recording medium **14** while being recorded to another recording medium such as the storage unit **20** in the editor's terminal unit **4**, for example, as shown in **FIG. 11**. **FIG. 11** explains how electronic mark data is described in the storage unit **20** and recording medium **14**, respectively, according to this embodiment.

[0171] As shown in **FIG. 11**, after imaging is started, the time code data "TC**1**", "TC**2**", . . . , "TC**7**" will be recorded to the recording medium **14** into the "Video scene **1**" and "Video scene **2**" already therein in the playing direction synchronously with the "Scene ID"**102** and "Scene ID"**110** for identification of the "Video scene **1**" and "Video scene **2**", respectively, in attribute mark data and with video content data. It should be noted that the electronic mark text data will not be described in the recording medium **14**.

[0172] As shown in **FIG. 11**, after starting imaging, the storage unit **20** will store an electronic mark data list **120** including "Scene ID"**101** and "Scene ID"**110** as attribute mark data, "REC start"**100**, "Highlight"**106**, "OUT"**108**, "REC start"**100**, "IN"**104**, "Highlight"**106** and "OUT"**116** as electronic mark text data, and the time code data "TC**1**", "TC**2**", . . . , "TC**7**" described synchronously with the recording medium **14** according to the description of the electronic mark data in the recording medium **14**. It should be noted that the electronic mark data list **120** generically refers to list data generated on the basis of electronic mark data such as electronic mark list data etc. which will be described in detail later.

[0173] As shown in **FIG. 11**, the storage unit **20** stores electronic mark text data including "REC start" etc., attribute mark data including "Scene ID" etc. and time code "TC" grouped with respect to each video scene.

[0174] A video scene for entry into the electronic mark data list **120** can be retrieved taking, as indexes, electronic mark data including attributed mark data and electronic mark text data recorded in the electronic mark data list **120**, and time code data synchronous with the electronic mark data, and also a video scene recorded in the recording medium **14** can be retrieved directly from the time code data and attribute mark data recorded in the recording medium **14**.

[0175] Note that the recording medium **14** is not limited to any magnetic tape but may be an optical disk, magnetic disk or hard disk. For example, an optical disk drive having a similar function as in **FIG. 3** may be used to record electronic mark data and other data to an optical disk as shown in **FIG. 12**.

[0176] The embodiment of the video content edition support system constructed as above operates as will be described herebelow.

[0177] First, recording (description) by the imaging device **2** will be explained with reference to **FIGS. 3 and 13**. **FIG. 13** shows a flow of operations made in recording data by the imaging device included in the video content edition support system according to the present invention.

[0178] First of all, to image an object, the control switch **32** of the imaging device **2** is turned on. The set switch **40** is operated to set data such as a medium ID for the recording medium **14**, a scene ID for a video content or an exposure time (time code) for description into the recording medium **14**.

[0179] With the above setting, the data signal generator **41** generates time code data DT and user data DU. The time code data DT and user data DU are held in the time code data holder **42** and user data holder **43**, respectively. The data thus held are outputted from the time code data holder **42** and user data holder **43**, respectively.

[0180] When attribute mark data as scene ID for identification of a video scene and a mode in which electronic mark text data related with a video content such as date of imaging, location of imaging, etc. are to be described (recorded) are selected by operating the set switch **40**, the data signal generator **41** will generate attribute mark data DZ and electronic mark text data DM on the basis of a position information signal from a GPS unit (not shown) included in the data signal generator **41** or the like.

[0181] The attribute mark data DZ and electronic mark text data DM are held in the attribute mark data holder **78** or electronic mark text data holder **45**, and the data thus held are outputted from the attribute mark data holder **78** or electronic mark text data holder **45**.

[0182] As shown in **FIG. 13**, when a VTR status signal indicating that the imaging device **2** is in recording operation is transmitted to the editor's terminal unit **4** and imaging is started by operating the control switch **32** (in step **S1202**), it is judged based on a motor control signal MC from the operation controller **33** whether the imaging device **2** is recording (in step **S1204**). When it is determined that the imaging device **3** is recording, a motor drive signal MD is transmitted by the motor controller **34** to the capstan motor **35** and drum motor **36**. The recording medium (magnetic tape in this case) **14** starts being fed and the rotary head assembly **37** is put into rotation.

[0183] In case it is determined that the imaging device **2** is recording (describing) (in step **S1204**), a recording signal is transmitted from the digital signal recorder **71** to the rotary head assembly **37** on the basis of a mode signal MS supplied from the operation controller **33** and indicating that the imaging device **2** is in recording operation.

[0184] When electronic mark data is generated, the rotary head assembly **37** will describe electronic mark data and records a recording signal being described video content data to the helical track **82** shown in **FIG. 6** (in step **S1206**). In this step of electronic content data recording (description) (step **S1206**), recording will continuously be effected while the imaging device **2** is recording (describing) (as in step **S1204**). It should be noted that the description of electronic mark data into video content data will be described in detail later.

[0185] The recording signal is transmitted to the controller **76**, and then as video content data the editor's terminal unit **4** can display to the editor's terminal unit **4** via the communication unit **75** (in step **S1208**). It should be noted that before transmitting the recording signal, the video content data may be converted by compression or the like into a lower-resolution one.

[0186] Next, description of attribute mark data by the imaging device **2** will be explained with reference to **FIGS. 3 and 13**. **FIG. 14** shows a flow of operations made in describing attribute mark data by the imaging device included in the video content edition support system according to the present invention.

[0187] First, attribute mark data is described in the step of recording where the aforementioned video content data is recorded (step **S1206**) as shown in **FIG. 13**.

[0188] As shown in **FIG. 14**, when the imaging is started and a mode signal MS indicating that the imaging device **2** is in describing (recording) operation is transmitted to the monostable multivibrator **47**, the latter will output a mode timing signal MT whose level is high "H" for a predetermined length of time to start a recording operation (in step **S1302**).

[0189] When the recording operation is started (as in step **S1302**), the data signal generator **41** will generate attribute mark data DZ (in step **S1304**). The attribute mark data DZ is held in the attribute mark data holder **78**. Also, while the mode timing signal MT is high "H" in level, it sets the moving terminal of the signal select switch **49** at a terminal b.

[0190] In case the marker button **50** has not been operated, the level of a mark signal GW from the monostable multivibrator **51** will be low "L" in level, so that the moving terminal of the signal select switch **77** will be set at a terminal a and attribute mark data DZ of the scene ID for identification of video scene be transmitted to the signal modulator **53**.

[0191] Since the mode signal MS indicating that the imaging device **2** is in recording operation is transmitted to the recorder **54**, a recording signal WS generated based on updated time code data DT and attribute mark data DZ is transmitted to the stationary head **55** and rotary head assembly **37**, and the time code data DT is described (recorded) in the time code track TC on the recording medium **14** while being updated as shown in **FIGS. 6 and 8**. Further, the attribute mark data DZ being "Scene ID" for identification of a video scene is described (recorded) into the "User data" part included in the AUX signal field on the helical track **82** (in step **S1306**).

[0192] The recorder **54** having received the recording signal WS transmits the recording signal WS to the controller **76** in order to send the attribute mark data to the editor's terminal unit **4**. The attribute mark data is KLV-coded as shown in **FIG. 4** and transmitted to the editor's terminal unit **4** via the communication unit **75** (in step **S1308**).

[0193] Since the attribute mark data is metadata for identification of a video scene, it is described (recorded) in the recording medium **14** and storage unit **20** of the editor's terminal unit **4** and it will thus serve as reference data for identifying, from the editor's terminal unit **4**, an object video scene existent in the recording medium **14**.

[0194] Next, description of electronic mark text data by the imaging device **2** will be described with reference to **FIG. 15**. **FIG. 15** shows a flow of operations made in describing electronic mark text data by the imaging device included in the video content edition support system according to the present invention.

[0195] First, while the imaging device **2** is in recording operation for recording the above video content data (as in step **S1204**) as shown in **FIG. 13**, electronic mark text data is described by operating the marker button **50**.

[0196] Next, when the imaging device **2** is in recording operation (as in step **S1204**), a mode signal MS indicating that the imaging device **2** is in recording operation is transmitted to the monostable multivibrator **47** as shown in **FIG. 15**. Then, the monostable multivibrator **47** outputs a mode timing signal MT whose level is high "H" for a predetermined length of time and the data signal generator **41** generates electronic mark text data DM (in step **S1402**).

[0197] When a "REC start" button (not shown) included in the marker button **50** is pressed (in step **S1404**), a mark signal GW from the monostable multivibrator **51** will be high "H" in level for a predetermined length of time, so that the moving terminal of the signal select switch **77** will be set at a terminal b. Also, since the mark signal GW is high "H" for the predetermined length of time, a signal MR will also be high "H" for a predetermined length of time and the moving terminal of the signal select switch **49** be set at the terminal b.

[0198] Therefore, the signal modulator **53** is supplied with the electronic mark text data MD including "REC start". The recorder **54** having received the recording data signal WT transmits the recording signal WT to the stationary head **55** and the recording signal WS to the controller **76**.

[0199] The controller **76** having received the electronic mark text data MD including the "REC start" and the recording signal WS including the time code data DT sends the electronic mark text data MD and time code data DT to the communication unit **75**.

[0200] The communication unit **75** makes KLV coding of the received electronic mark text data including the "REC start" and time code data synchronous with the electronic mark text data as shown in **FIG. 5**, and transmits the KLV-coded data to the editor's terminal unit **4** (in step **S1406**).

[0201] When a "Highlight" button (not shown) included in the marker button **50** is operated in the case of an important scene such as "highlight" scene during recording operation, for example, during imaging by a video camera (in step **S1404**), electronic mark text data including text data ("highlight") corresponding to the type of the operated marker button **50** is KLV-coded as shown in **FIG. 5** is transmitted to the editor's terminal unit **4** as above (in step **S1406**).

[0202] Note that similarly to the operation of the "Highlight" button (not shown) of the marker button **50**, inputting a voice "highlight" to the microphone sound-converter **79** and recognizing the "highlight" input by means of the microphone sound-converter **79** permits to generate a control signal SG from which electronic mark text data on the voice "highlight" is generated.

[0203] Upon completion of the image recording, video content data including "Video scene **1**" and "Video scene **2**" are recorded to the recording medium **14** having video content data recorded therein, as shown in **FIG. 11** or **12**, for example.

[0204] As shown in **FIG. 11** or **12**, recording is started for each of "Video scene **1**" and "Video scene **2**", "Scene

ID"102 and "Scene ID"110 as attribute mark data and time code data including "TC1" and "TC2" are described in video content data, and nearly at the same time, the attribute mark data and time code data are transmitted to the editor's terminal unit 4 including the storage unit 20.

[0205] Further, as shown in FIG. 11 or 12, electronic mark text data such as "IN", "Highlight", etc. generated by operating the marker button 50 or microphone sound-converter 79 are described into the storage unit 20 of the editor's terminal unit 4, and time code synchronous with the described electronic mark text data is also described into the storage unit 20 of the editor's terminal unit 4.

[0206] According to this embodiment of the present invention, electronic mark text data is not recorded to the recording medium 14 but to another recording medium such as the editor's terminal unit 4 as shown in FIGS. 11 and 12. However, the present invention is not limited to this embodiment but electronic mark data including electronic mark text data and attribute mark data may of course be described in the recording medium 14 without being described in any other recording medium as shown in FIG. 10.

[0207] Next, reception of electronic mark data by the editor's terminal unit 4 will be explained with reference to FIGS. 2 and 16. FIG. 16 shows a flow of operations made in receiving electronic mark data by the editor's terminal unit included in the video content edition support system according to the present invention.

[0208] First, the editor's terminal unit 4 is switched on before starting imaging with the imaging device 2 and "Medium ID" etc. for identification of the recording medium 14 to which the imaging device 2 will record data, so that the editor's terminal unit 4 will be able to receive electronic mark data, as shown in FIG. 16.

[0209] Next, when a VTR status signal indicating that the imaging device 2 is in recording operation is sent and imaging is started, the imaging device 2 transmits video content data, the communication unit 21 receives it (in step S1502), and the video content data is displayed at the display unit 22.

[0210] When electronic mark data is described by the imaging device 2 in the process of recording, KLV-coded electronic mark data is transmitted from the imaging device 2 to the editor's terminal unit 4 and the KLV-coded electronic mark data is sent to the communication unit 21 (in step S1504).

[0211] The CPU 23 judges which the received KLV-coded electronic mark data is, attribute mark data or electronic mark text data (in step S1506). When the KLV-coded electronic mark data is determined to be attribute mark data and no same attribute mark data is existent in the storage unit 20, scene ID block data included in electronic mark list data is generated (in step S1508).

[0212] In case the same attribute mark data is existent in the storage unit 20 or in case the electronic mark data is determined to be electronic mark text data, scene ID block data in the electronic mark list data is updated (in step S1510). It should be noted that the scene ID block data and electronic mark list data will be described in detail later.

[0213] Next, when the generation of electronic mark list data (as in step S1508) or updating of the electronic mark list data (as in step S1510) is over, it is judged based on the VTS status signal whether the imaging device 2 is in recording operation or not (in step S1512). When it is determined that the imaging device 2 is in recording operation, the reception of video content data (as in step S1502) is continued. When it is determined that the imaging device 2 is not in recording operation but has completed recording, edition is effected on the basis of an edition screen 1700 displayed at the display unit 22 (in step S1514). It should be noted that the edition screen 1700 displayed at the display unit 22 included in the present invention.

[0214] Next, when the edition of video content data based on the edition screen 1700 (as in step S1514) is complete, edition information data having recorded therein time code etc. of a video scene (from In point to Out point, for example) required for the edition is generated in the on-line editing (in step S1516). It should be noted that the edition information data used in this embodiment will be described in detail later.

[0215] Generation or updating of the electronic mark list data will be explained herebelow with reference to FIGS. 16 and 17. FIG. 17 schematically illustrates the structure of electronic mark list data used in the video content edition support system according to the present invention.

[0216] First, when the KLV-coded attribute mark data is received (in step S1506) as shown in FIG. 16, the CPU 23 will ingest "Material No." as attribute mark data shown in FIG. 4, and checks if the same attribute mark data is existent in the electronic mark list data stored in the storage unit 20.

[0217] Next, when no same attribute mark data exists, the electronic mark list generator 28 will generate electronic mark list data (in step S1508) as shown in FIG. 16.

[0218] Note here that as shown in FIG. 17, the electronic mark list data 1600 is stored in the storage unit 20 to and from which data can be written and read and it includes more than one or two medium ID block data 1602 for identification of the recording medium 14 to which data has been recorded by the imaging device 2, more than one or two scene ID block data 1603 for identification of a video scene, and more than one or two text block data 1604.

[0219] In case video content data is initially received from the editor's terminal unit 4, no data exists in the electronic mark list data 1600. For reception of the video content data, there will first be generated the medium ID block data 1602 as an medium ID for the recording medium 14 used in the imaging device 2.

[0220] Note that since the medium ID can be pre-registered in the recording medium 14 by the imaging device 2, video content data can be received without generation of the medium ID block data 1602 at the time of setting the reception of the video content data. Further, text data such as a storage location in the recording medium 14 can be registered as additional data in the medium ID.

[0221] For the same medium ID, the scene ID block data 1603 and text block data 1604 are added one after another to the medium ID block data 1602.

[0222] Next, "Scene ID" stored in the "Maternal No." part shown in FIG. 4 is ingested by the electronic mark list generator 28 from the received KLV-coded attribute mark data for generation of electronic mark list data.

[0223] Then, the electronic mark list generator **28** newly generates scene ID block data **1603** in the medium ID block data **1602** corresponding to an preset medium ID on the basis of the "Scene ID" for identification of a video scene.

[0224] Therefore, in the newly generated scene ID block data **1603**, there will not existent any text block data **1604** until electronic mark text data is received.

[0225] Next, when KLV-coded electronic mark text data or time code data other than attribute mark data is received via the communication unit **21** as shown in **FIG. 16**, the electronic mark list generator **28** will update the electronic mark list data (in step **S1510**).

[0226] First for updating electronic mark list data, the electronic mark list generator **28** ingest text data or time code data stored in the "Value" part shown in **FIG. 5** from the KLV-coded electronic mark text data or time code data.

[0227] Note that in case the ingested text data has a content seeming to have a special importance such as "Highlight", the electronic mark list generator **28** can order the CPU **23** to cause the display unit **22** to blink for attracting the editor's attention. Therefore, the editor's terminal unit **4** can be controlled by sending predetermined electronic mark data from the imaging unit **2** to the editor's terminal unit **4**.

[0228] Next, the electronic mark list generator **28** adds the text block data **1604** to the latest scene ID block data **1603** and update the ingested text data or time code data to the additional text block data **1604**.

[0229] Each of the text block data **1604** is formed from a set of the ingested text data and time code synchronous with the ingested text data, and it is generated at each reception of text data and time code.

[0230] Note that although the present invention has been described concerning the example in which the text block data **1604** are generated in the order received by the editor's terminal unit **4**, it is not limited to such an example but the text block data **1604** may be generated in the order of types of the received text data.

[0231] Also, although the present invention has been explained concerning the example in which each of the text block data **1604** is formed from a set of text data and time code data, it is not limited to this example but time code data may be additionally stored in text data of the same type for each type of the text data, for example.

[0232] Also, although the present invention has been explained concerning the example in which during recording, the electronic mark text data or time code data is real-time received from the imaging device **2** to generate the text block data **1604**, it is not limited to this example but recorded attributed mark data, electronic mark text data and time code data can be collectively received from the imaging device **2** after completion of recording.

[0233] The edition screen **1700** according to the present invention will be explained below with reference to **FIG. 18**.

[0234] **FIG. 18** explains an example of the edition screen displayed at the editor's terminal unit included in the video content edition support system according to the present invention. The edition screen **1700** is intended for edition of video content data by selecting necessary video content data on the basis of header information having described therein a feature of the video content data forming the electronic mark list data.

[0235] As shown in **FIG. 18**, the edition screen **1700** displayed at the display unit **22** includes a video screen part **1701** to display video content data real-time sent from the imaging device **2** or stored in the storage unit **20**, an edition screen part **1710** to display text data as electronic text data, etc. and a retrieval part **1704** to retrieve an object video scene.

[0236] The video screen part **1701** includes a video screen **1702** to display video content data and electronic mark text buttons **1744** (**1744***a*, **1744***b*, **1744***c* and **1744***d*) to describe electronic mark text data in the recording medium **14** of the imaging device **2**. It should be noted that although the electronic mark text buttons **1744** in the edition screen **1700** according to this embodiment include four as shown in **FIG. 18**, the present invention is not limited to such a number of buttons but the buttons **1744** may include more than one or two buttons.

[0237] The edition screen part **1710** includes image display screens (**1712**, **1714**, **1716**, **1718** and **1819**) each for displaying an image frame representative of video scenes having recorded therein electronic mark including attribute mark data or electronic mark text data, and mark displays (**1720**, **1722**, **1724**, **1726** and **1728**) each for displaying an electronic mark.

[0238] Note that although the edition screen part **1701** in this embodiment includes five image display screens and five mark displays as shown in **FIG. 18**, the present invention is not limited to these numbers of image display screens and mark displays but the edition screen part **1710** may include ten such image display screens and ten mark displays, for example.

[0239] Each of the mark displays (**1720**, **1722**, **1724**, **1726** and **1728**) includes a "Medium ID" part for identification of a recording medium, a "Scene ID" part for identification of a video scene, a "Text data" part for electronic mark text data, and a time code part "TC".

[0240] For example, the mark display part **1720** displays "ABC" in the "Medium ID" part, "11113" in the "Scene ID" part, "REC start" in the "Text data" part, and "01:12:25" in the "TC" part.

[0241] The "Text data" can be changed. "REC start" currently displayed can be changed to "Highlight No. 1", "First In" or the like.

[0242] "E140-39-2 N41-40-6" displayed in the "Text data" part of the mark display **1722** indicates a location of imaging, positioned by GPS included in the imaging device **2**. That is, it means "140 degrees, 39 minutes and 2 seconds east longitude and 41 degrees, 40 minutes and 6 seconds north latitude".

[0243] Note that although the location of imaging is represented by a latitude and longitude in the above-mentioned example, the present invention is not limited to this indication but a location of imaging may be represented by a latitude and longitude or altitude.

[0244] Each of the mark displays (**1720**, **1722**, **1724**, **1726** and **1728**) indicates electronic mark data described by

operating any of the electronic mark text buttons **1744**, marker button **50** or microphone sound-converter **79**, and each of the image display screens (**1712**, **1714**, **1716**, **1718** and **1719**) provides a real-time indication of an image of video content data synchronous with a location where electronic mark data is described.

[**0245**] In the off-line editing before the on-line one, the feature of a video scene is picked up based on indications in the mark displays (**1720**, **1722**, **1724**, **1726** and **1728**) displayed in the edition screen part **1710**, and a necessary video scene for the on-line editing is logged. That is, since text data indicated in the mark displays (**1720**, **1722**, **1724**, **1726** and **1728**) are described when any characteristic event has taken place, a high efficiency of the logging can be attained by observing the image display screens (**1712**, **1714**, **1716**, **1718** and **1719**) displayed on the edition screen part **1710**.

[**0246**] An image displayed on the image display screen **1718** has the text data thereof displayed as "Highlight" in the mark display **1726**. Therefore, it will easily be known that the image can be used as a highlight of a video scene ("Scene ID **11113**").

[**0247**] Further, when it is desired to confirm a video scene again by checking the content of the video scene with reference of text data in the mark displays (**1720**, **1722**, **1724**, **1726** and **1728**), it is possible to cue up a video scene corresponding to "Text data" or "Time code" specified in video content data stored in the storage unit **20** or recorded in the recording medium **14** of the imaging device **2** by selecting "Text data" or "Time code" displayed in the mark displays (**1720**, **1722**, **1724**, **1726** and **1728**).

[**0248**] By changing the edition point (cue point) where there exists electronic mark data described in video content data, it is possible to change images displayed in the image display screens (**1712**, **1714**, **1716**, **1718** and **1719**). In this case, by selecting images displayed in the image display screens (**1712**, **1714**, **1716**, **1718** and **1719**), a video scene in the video content data recorded in the storage unit **20** is displayed in the video screen **1702** and edition point (cue point) in the electronic mark data can be changed.

[**0249**] Therefore, images displayed in the image display screens (**1712**, **1714**, **1716**, **1718** and **1719**), in which "Text data" is "IN" (In point) or "OUT" (Out point), can be displayed in the video screen **1702**, and the off-line editing in which video scenes to be used are ingested can be efficiently done from the edition screen **1700** of the editor's terminal unit **4** by checking the edition points without use of any other editing device.

[**0250**] Note that by transmitting change information on the changed "Text data", edition points or the like from the editor's terminal unit **4** to the imaging unit **2** via the network **16**, the edition points (cue point) for the "Text data" or electronic mark data described in the recording medium **14** can be changed.

[**0251**] By entering an object "Text data" as keyword in a retrieval input part **1706** included in the retrieval unit **1704** and clicking a button **1708** by a mouse or similar pointing device, electronic mark data corresponding to the keyword can be retrieved from the electronic mark list data **1600** stored in the storage unit **20**. As a result, an electronic mark data and corresponding image can be displayed in the mark display (**1720**, **1722**, **1724**, **1726** or **1728**) and image display screen (**1712**, **1714**, **1716**, **1718** or **1719**), respectively. Therefore, by retrieving the feature of a video scene or image which may be necessary for the on-line editing with the text data of electronic mark text data being taken as a keyword, it is possible to easily select an object video scene or image corresponding to the keyword.

[**0252**] The edition information data will be explained herebelow. The edition information includes edition points of a video scene such as EDL (edit decision list) recorded based on time code data, and on-line edition of video content data recorded in the recording medium **14** as a master is done based on the edition information data.

[**0253**] The above-mentioned edition information data can be stored in a recording medium **12** such as a memory stick as shown in **FIG. 1** and be read by an on-line edition unit (not shown) used in the on-line editing. It should be noted that the edition information data can also be sent to the on-line edition unit via the network without using the recording medium **12**.

[**0254**] Off-line editing including logging etc. can be done by the editor's terminal unit **4** in parallel to recording from the imaging device **2**, and after completion of the off-line editing, edition information data can be generated for the on-line editing. Therefore, after completion of imaging, it is not necessary to re-check any necessary video scene for the on-line editing by replaying a VTR, which will contribute to an improved efficiency of the edition.

[**0255**] Further, by setting a keyword for a video scene required for the on-line editing on the basis of a text set in the "Text data" part, the video scene selection to find an object video scene corresponding to the keyword can be done with an improved efficiency.

[**0256**] The present invention has been explained with reference to the accompanying drawings, but it is not limited to the embodiment having been described with reference to the drawings. Those skilled in the art will apparently be able to make modifications or corrections of the present invention within the technical idea set forth in the claims given later and such modifications and corrections are of course included in the technical scope of the present invention.

[**0257**] The aforementioned embodiment is such that electronic mark data is described by the imaging device **2**, by way of example. However, the present invention is not limited to such an embodiment but an input device such as the marker button **50** or the recorder **54** may be provided for description of electronic mark data. For example, with the marker button **50** and recorder **54** being provided in the editor's terminal unit **4**, the latter can receive video content data captured by the imaging device **2** and electronic mark data can be described in the video content data while recording the video content data to the recording medium.

[**0258**] In the foregoing, the present invention has been explained concerning the example in which a GPS system is provided to record information of a location of imaging in electronic mark text data. However, the present invention is not limited to this embodiment but information on the operation of the imaging device **2** such as a magnification factor of zooming of the imaging device **2**, for example, can also be recorded in electronic mark text data.

[0259] In the foregoing, the present invention has been described in detail concerning certain preferred embodiments thereof as examples with reference to the accompanying drawings. However, it should be understood by those ordinarily skilled in the art that the present invention is not limited to the embodiments but can be modified in various manners, constructed alternatively or embodied in various other forms without departing from the scope and spirit thereof as set forth and defined in the appended claims.

Industrial Applicability

[0260] As having been described in the foregoing, the present invention can improved the efficiency of edition by implementing an off-line edition such as logging of necessary video scenes for the on-line editing on the basis of video content data recorded in parallel to imaging.

1. A video content edition support system including an imaging device to record captured video content data to a recording medium, an editor's terminal unit to display video content data transmitted from the imaging device and a network to connect the imaging device and editor's terminal unit to each other, the system comprising:

a recorder to describe electronic mark data related to the video content data in the video content data;

an electronic mark list generator to generate electronic mark list data including header information on the video content data; and

an edition unit to edit the video content data on the basis of the electronic mark list data.

2. The system according to claim 1, wherein the recorder describes the video content data and electronic mark data on a nearly real-time basis.

3. The system according to claim 1, wherein the header information on the video content data is header information on the video scenes included in the video content data.

4. The system according to claim 1, wherein the electronic mark data includes attribute mark data being attribute information on at least the video content data, and electronic mark text data in which a feature of the video content data is described.

5. The system according to claim 1, wherein the attribute mark data includes scene identifiers for identification of video scenes in at least video content data.

6. The system according to claim 1, wherein the electronic mark text data has described therein a feature, location of imaging or date of imaging of each video scene included in at least the video content data with text data.

7. The system according to claim 1, wherein the edition unit generates edition information data on the basis of the electronic mark list data and video content data.

8. The system according to claim 1, wherein the electronic mark data is be generated based on an input voice.

9. An imaging device connected to an editor's terminal unit which displays video content data and which records captured video content data to a recording medium, the device comprising:

a recorder which describes electronic mark data related to the video content data in the video content data.

10. An editor's terminal unit connected to an imaging device which includes a recorder to record captured video content data to a recording medium and which displays the video content data, the editor's terminal unit comprising:

an edition unit to edit the video content data on the basis of the electronic mark data related to the video content data.

11. A video content edition support method in which there are used an imaging device to record captured video content data to a recording medium and an editor's terminal unit to display video content data transmitted from the imaging device connected via a network to connect the imaging device and editor's terminal unit to each other, the method the steps of:

describing electronic mark data related to the video content data in the video content data;

generating electronic mark list data including header information on the video content data; and

editing the video content data on the basis of the electronic mark list data.

* * * * *