torqeedo
STARNBERG.GERMANY

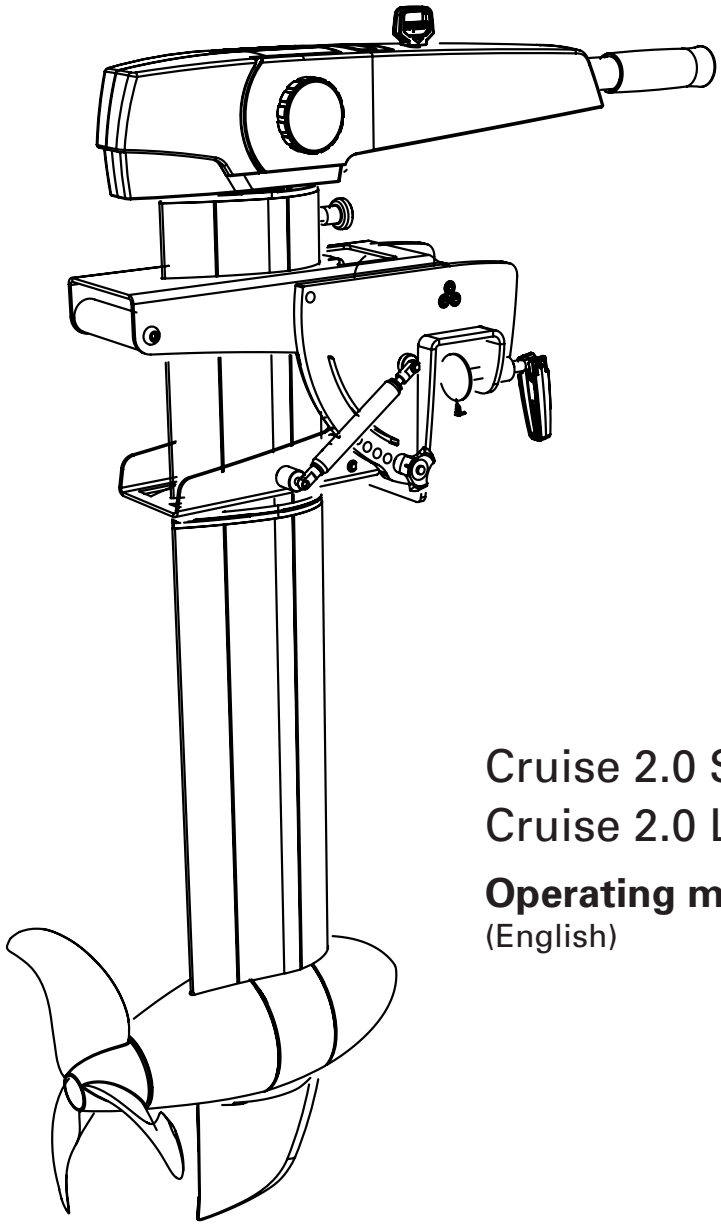

Cruise 2.0 S
Cruise 2.0 L

Operating manual
(English)

BRP 1014

1. Contents
2. Important safety and handling instructions 4
3. Introduction 6
4. About this instruction manual 7
5. Conformity declaration 7
6. Warranty conditions 8
   6.1 Extent of warranty 8
   6.2 Warranty process 9
7. Equipment and operating elements 10
   7.1 Supply scope 10
   7.2 Plan of operating elements 11
8. Starting up 12
   8.1 Fitting the drive onto the boat 12
   8.2 Basic information on battery supply 13
   8.3 Connecting the Cruise 2.0 to lead batteries (acid, gel, AGM) using the Torqeedo cable set 16
   8.4 Connecting the Cruise 2.0 to lead batteries (acid, gel, AGM) without using the Torqeedo cable set 18
   8.5 Connecting the Cruise 2.0 to a Torqeedo Power 26-77 lithium-manganese battery 19
   8.6 Connecting the Torqeedo remote acceleration lever to the Cruise 2.0 20
9. Operation 20
   9.1 Transom bracket 20
   9.2 Tiller 22
   9.3 Pylon 23
10. Dismantling 24
11. Storage and care instructions 25
   11.1 Corrosion protection 25
   11.2 Other care instructions 25
12. Trouble shooting 26
13. Technical data 27
14. Disposal instructions 28
15. Accessories 29
16. Torqeedo Service Center 32

2. Important safety and operating instructions

Important safety instructions

Torqeedo motors are designed to operate safely and reliably as long as they are used according to the operating manual. **Please read this manual carefully** before you start the motor. Ignoring these instructions can cause property damage or personal injury. Torqeedo accepts no liability for damage caused by actions that contradict this operating manual.

To ensure safe operation of the motor:

- Only operate the gas spring tilt mechanism when the motor is mounted roughly vertically. Otherwise, the strong pre-tension of the gas pressure springs will cause the tilt mechanism to flip up rapidly. This can cause serious injury.
- Do not reach into the opening on top of the transom mount. If you do so, this can cause squashing when the tilt mechanism is activated. The opening is marked with a safety sticker. For details, see section 8.1 of these operating instructions.
- Familiarize yourself with all the motor controls. For instance, you should be able to stop the motor quickly if necessary.
- Usually the power for your Cruise 2.0 is supplied by two or more batteries (24 V nominal voltage). It is essential when linking up the batteries to ensure you only combine the same kind of batteries (same capacity, same age, same manufacturer, same charge status). Different charge conditions between batteries linked together can, when the batteries are linked up, lead to extremely high compensating currents or overloading that overload cables, plugs, the master switch or the battery itself. In extreme cases, this can cause fires and injuries. Therefore always follow the instructions in section 8.1 to 8.3 of this operating manual.
- The cable cross-section for battery configurations must be at least 25 mm^2. We recommend using 35 mm^2 cables.
- Only run the motor when you have fitted a battery master switch and a 125 A fuse into the circuit. Generally, we recommend fitting the Torqeedo Cruise 2.0 cable set, which comes with both these features and a cross-section of 35 mm^2.
- Only allow adults who have been instructed on how to operate the motor or have read the operating instructions to run it.
- Follow the boat manufacturer's instructions on the permissible motorization of your boat. Do not exceed the capacity limits.
- Stop the engine immediately if someone goes overboard.

- Do not run the motor if someone is in the water near the boat.
- Do not use the motor as a lashing point for your boat. Do not use the motor as a handle for lifting or carrying smaller boats
- Do not submerge the motor completely in water or other liquids.

Important operating instructions

Here are the most important instructions on operating Torqeedo Cruise Motors. Apart from these instructions, please observe the complete operating instructions to prevent damage to your motor.

- Only run the motor when the propeller is under water. If it is run in the air, the shaft sealant rings that seal the motor to the drive shaft may become damaged. If the motor is run in the air for a longer period, the motor itself can overheat.
- When mounted, the tiller electronics are protected against spray and swell water. However, you must not submerge the tiller and the shaft head and you must keep the plug contacts in the tiller dry. Submerging the tiller and the shaft head can irreparably damage the electronics.
- After use, cut the connection between the motor and the battery using a master switch. This completely cuts the power supply to the motor and prevents the batteries from discharging during the stoppage time because of quiescent current.
- After use, always take the motor out of the water. You can do this using the tilt mechanism of the transom mount.
- After use in salt or brackish water, rinse the motor (but never the shaft head and the tiller) with fresh water.
- Occasionally use contact spray to care for the gas pressure springs, the contacts on the power cable and the plug on the steering cable. If you use the motor in salt or brackish water, we recommend applying contact spray once a month.
- Only store the motor in a dry condition.
- If the motor malfunctions, first shift the tiller handle onto the stop position for approx. 2 seconds. The stop position has a reset function and can correct smaller faults itself.
- If you have a problem with your motor, please follow the instructions in this manual for handling warranty claims.

3. Introduction

Dear customer,

We are delighted that you have chosen our motor. In terms of drive technology and efficiency, your Torqeedo Cruise outboard motor is cutting-edge technology. It has been designed and manufactured with the utmost care and with a special focus on comfort, user-friendliness and safety, then exhaustively tested before delivery.

Please take the time to read these operating instructions carefully so that you can use the motor properly and enjoy it for a long time.

We constantly strive to improve Torqeedo products. Should you have any comments on the design and use of our products, we would be pleased to hear from you. Please contact our Customer Services if you have any questions on Torqeedo products (service_international@torqeedo.com).

We hope you have a lot of fun with this product.

Yours,

Dr. Friedrich Böbel
Managing Director

Dr. Christoph Ballin
Managing Director

4. About this instruction manual

This instruction manual will help you use your Torqeedo Cruise 2.0 safely and efficiently. All information is given according to our latest knowledge. Subject to technical changes.

- Indicates a danger or a procedure that may cause injury and property damage.

- Indicates a danger or a procedure that may cause property damage.

5. Conformity declaration

We, Torqeedo GmbH, with sole responsibility, declare the conformity of the Cruise 2.0 product range with the following provisions:

Small water vehicles
Electrical systems
Low-voltage direct current (DC) systems
DIN EN ISO 10133:2000

Starnberg, February 2007

Managing Director's signature

The aforementioned company holds the following technical documents available for viewing:
- Required operating manual
- Plans/software source code (EU authorities only)
- Inspection records (EU authorities only)
- Other technical documentation (EU authorities only)

6. Warranty conditions

6.1 Extent of warranty

Torqeedo GmbH, Petersbrunner Straße 3a in D-82319 Starnberg, Germany, guarantees the final purchaser of a Torqeedo outboard motor that the product is free from material and manufacturing faults during the period stated below. Torqeedo will indemnify the final purchaser for any expense for the repair of a material or manufacturing fault. This indemnification obligation does not cover the incidental costs of a warranty claim or any other financial losses (e.g. costs for towing, telecommunications, food, accommodation, loss of earnings, loss of time etc.).

The warranty ends two years after the date on which the product was delivered to the final purchaser. Products that are used commercially or by public authorities - even if only temporarily - are excluded from this two-year warranty. In these cases, the statutory warranty applies. The right to claim under warranty runs out six months after discovery of a fault.

Torqeedo decides whether faulty parts are repaired or replaced. Distributors and dealers who repair Torqeedo motors have no authority to make legally binding statements on behalf of Torqeedo.

Normal wear and tear and routine servicing are excluded from the warranty.

Torqeedo is entitled to refuse a warranty claim if
- the warranty was not correctly submitted (especially failure to contact Torqeedo before sending back goods, failure to present a completely filled-in warranty certificate and proof of purchase, see. Warranty process),
- the product was not treated in accordance with the instructions
- the safety, operating and care instructions in the manual were not observed
- the product was in any way altered or modified or parts and accessories were added that are not expressly permitted or recommended by Torqeedo
- previous services or repairs were not carried out by firms authorized by Torqeedo, or non-original parts were used

unless the consumer can prove that the facts that led to the warranty being void did not affect the development of the fault.

As well as the rights arising from this warranty, the customer also has legal warranty claim rights arising from the purchase contract with the dealer which are not hampered by this warranty.

6.2 Warranty process

Adhering to the following warranty process is a prerequisite to the satisfaction of any warranty claims.

Before dispatching any apparently faulty goods, it is imperative to coordinate the delivery with Torqeedo Services. You can contact us by phone, email or post. You can find the contact details on the back of this manual. Please understand that we are unable to deal with products of which we have not been notified and will therefore refuse to accept delivery.

To check a warranty claim and to process a warranty, we require a completed warranty certificate as well as proof of purchase.

- The warranty certificate attached to this operating manual must show contact details, product details, serial number and a brief description of the problem.
- Proof of purchase must indicate the purchase and the date of purchase (e.g. till receipt, invoice or receipt).

For returning the motor to the Service Center, we recommend keeping the original Torqeedo packaging.

We are available to answer any questions regarding the warranty process - simply use the details on the back cover.

7. Equipment and operating elements

7.1 Supply scope

The full supply scope of your Torqeedo Cruise should include the following parts:

- Motor with tiller, transom mount, shaft, pylon, and propeller
- Tiller handle
- 2 on/off pins
- Operating instructions
- Warranty certificate
- Packaging

7.2 Plan of controls

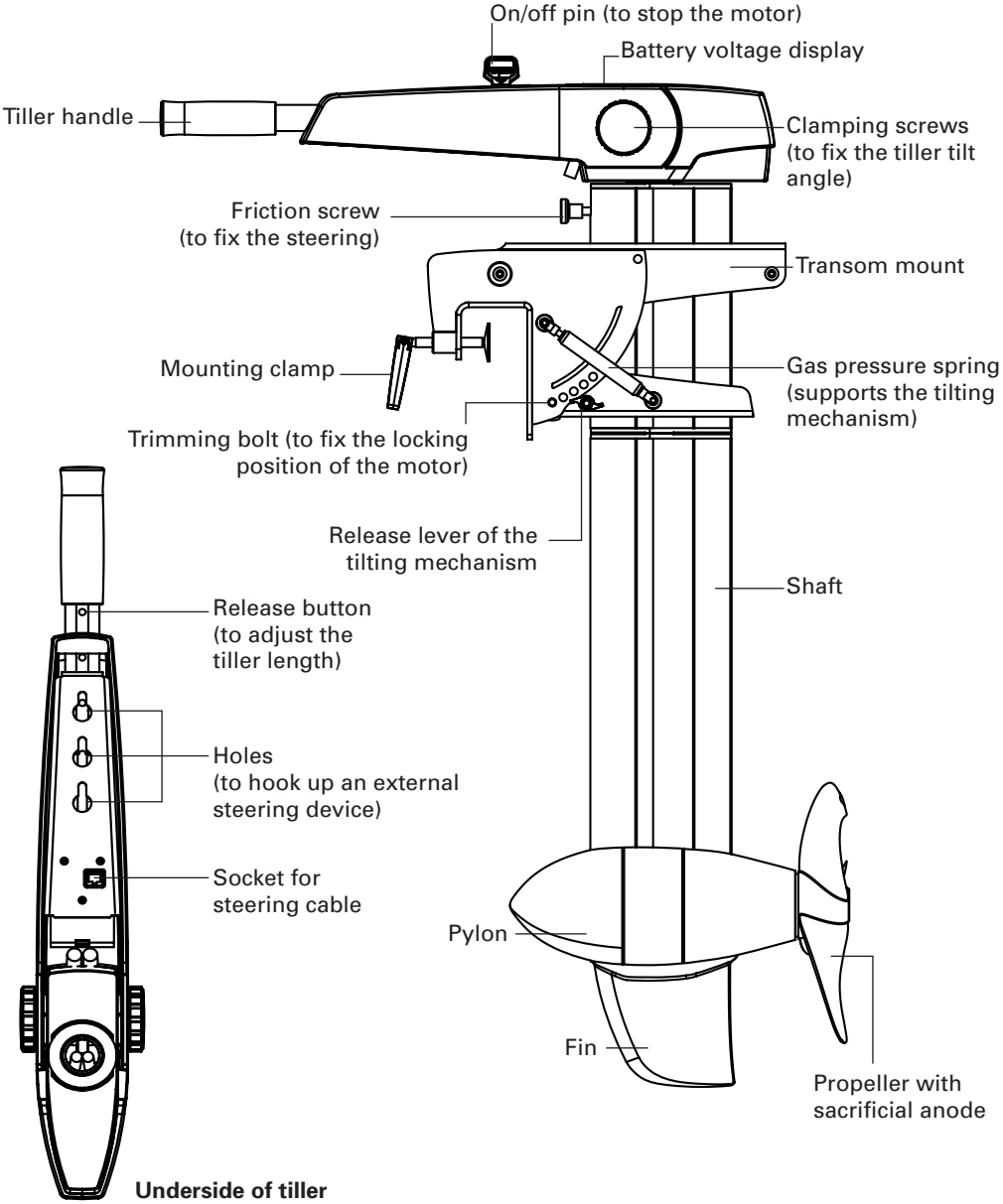

8. Starting up

8.1 Fitting the drive onto the boat

- Only operate the gas spring tilt mechanism when the motor is mounted roughly vertically. Otherwise, the strong pre-tension of the gas pressure springs will cause the tilt mechanism to flip up rapidly. This can cause serious injury. On delivery from the manufacturer, the tilt mechanism release lever is secured with a cable binder. We recommend securing the release lever again when you transport or store the motor.
- Do not reach into the opening on top of the transom mount. If you do so, this can cause squashing when the tilt mechanism is activated. The opening is marked with a safety sticker.
- Make sure the tilt mechanism audibly clicks into place when you fold it down.

1. Remove the parts that belong to the Cruise supply scope from the packaging.

2. Put the tiller handle on the tiller. Make sure you align the opening button on the tiller with the recesses in the tiller handle. The opening button must click into place audibly.

3. Fit the drive onto the transom or the motor bracket of your boat and securely tighten the two capstan-head screws.

4. Several steps are necessary to set the motor at a right angle to the water surface (trimming):

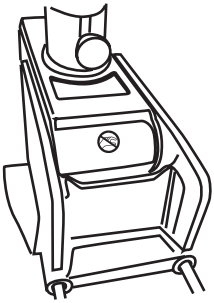

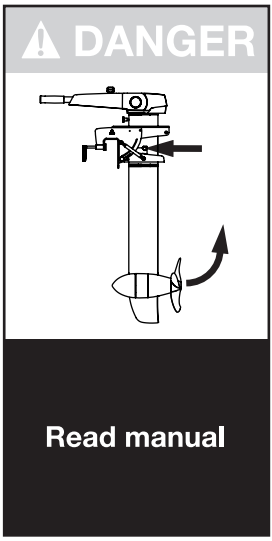

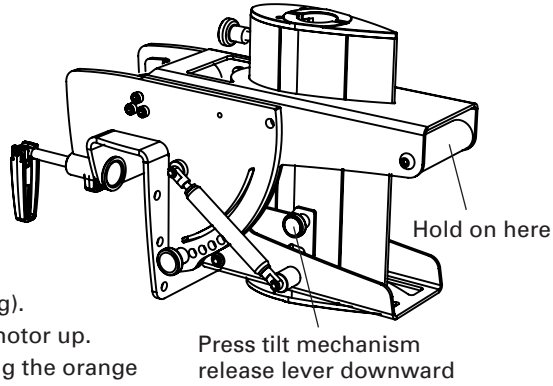

- First, release the clamping screws on the tiller and tilt the tiller right up. This is how you ensure the tiller does not hit parts of your boat when you tilt the motor.
- Now hold on to the rear side of the transom mount with one hand and use the other hand to press the release lever of the tilt mechanism (see drawing). Now you can easily and safely tilt the motor up.
- Loosen the trimming bolt by unscrewing the orange nut, then pull it out of the transom mount.
- Select the trimming position you want and insert the trimming bolt into the corresponding borehole. You must insert the trimming bolt through both side walls of the transom mount. Only then can you fix it into place again with the orange nut.
- Tilt the motor down again until it locks into the new position.
- Adjust the tiller to the position you want and tighten both clamping screws.

5. If you want to steer with an external steering system instead of the tiller, connect the thrust rod or the steering cable of your steering device to the holes on the underside of the tiller. You can obtain the necessary mounting material as accessories from your boat dealer. Before you use the drive, check the steering by moving it from one end point to the other.

8.2 Basic information on battery supply

The Cruise models can be operated with lead-acid, lead-gel, AGM or lithium-based batteries.

To calculate the travel times and range of the batteries, you need to know the battery capacity. In the following, this is stated in watt-hours (Wh). The number of watt-hours can easily be matched with the input power of the motor [in W]: The Cruise 2.0 has an input power of 2,000 W and consumes 400 Wh in one hour at full speed. The nominal capacity of a battery [Wh] is calculated by multiplying the charge [Ah] with the nominal voltage [V]. So a battery with 12 V and 100 Ah has a nominal capacity of 1,200 Wh.

It is generally true for lead-acid, lead-gel and AGM batteries that the nominal capacity calculated in this way cannot be fully utilized. This is due to the limited heavy-current capacity of lead batteries. To compensate for this effect it is advisable to use larger batteries. This effect is negligible for lithium-manganese batteries.

Decisive for the anticipated range and travel times of the batteries are not only the battery capacity actually available, but also the type of boat, the performance (shorter travel time and range at higher speeds) and in the case of lead batteries the ambient temperature.

The following table gives some examples of typical travel times. Here, we assume that the drive continually consumes 2,000 W of power at full speed. Smaller boats only require full power for acceleration, while consuming less input power at full speed. This results in longer travel times.

Model	Battery supply	Ambient tempe-rature	Speed category	Capacity actually available	Travel time in hours: minutes
Cruise 2.0	2. 400 Wh, lead-gel (2 batteries*, each 12 V, 100 Ah, approx. 65 kg)	> + 10 °C	Full speed	~ 1,600 Wh	~ 0:48
Cruise 2.0	2,400 Wh, lead-gel (2 batteries*, each 12 V, 100 Ah, approx. 65 kg)	> + 10 °C	Half speed	~ 2,300 Wh	~ 9:12
Cruise 2.0	4,800 Wh, lead-gel (2 batteries*, each 12 V, 200 Ah, approx. 130 kg)	> + 10 °C	Full speed	~ 4,000 Wh	~ 2:00
Cruise 2.0	4,800 Wh, lead-gel (2 batteries*, each 12 V, 200 Ah, approx. 130 kg)	> + 10 °C	Half speed	~ 4,700 Wh	~ 18:48
Cruise 2.0	1,994 Wh, lithium-manganese (1 Torqeedo Power 26-77, 18kg)	Between – 20 and + 45 °C	Full speed	~ 1,994 Wh	~ 1:00
Cruise 2.0	1,994 Wh, lithium-manganese (1 Torqeedo Power 26-77, 18kg)	Between – 20 and + 45 °C	Half speed	~ 1,994 Wh	~ 8:00

* new, good quality

We recommend that you achieve the required battery capacity in Wh using as few parallel connections as possible with as few batteries as possible. So, to give yourself a battery capacity of e.g. 4,800 Wh (at 24 V) it is better to use two 12 V / 200 Ah batteries rather than several parallel and serially linked batteries (e.g. four 12 V / 100 Ah batteries) Firstly, this avoids safety risks from battery configurations. And secondly, capacity differences between the batteries that already exist at the time of the configuration or that develop later have a negative effect on the overall battery system (capacity loss, also called drifting). Thirdly, this way you reduce losses at the contact points that can amount to 2-3% of the battery capacity.

To avoid safety risks, capacity losses and contact point losses with serial and parallel battery configurations, always only combine the same type of batteries (same capacity, same age, same manufacturer, same charge condition).

- Serial and parallel configured batteries must always have the same charge condition. That is why you must use only the same type of batteries in configurations (same capacity, same age, same manufacturer, same charge condition) and fully charge each battery separately in your charger before you connect it up. Differences in the charge condition can lead to extremely high compensatory currents or overloads that overload the cables and connectors or the battery itself. In extreme cases, this can cause fires and injuries.

8.3 Connecting the Cruise 2.0 to lead batteries (acid, gel, AGM) using the Torqeedo cable set

The Cruise 2.0 operates with a power supply of between 20 V and 30 V (relating to the nominal voltage). That means it can be operated with two serially configured 12 V lead-acid, lead-gel or AGM batteries.

To increase the capacity, several pairs of serially configured 12 V batteries can be configured parallel to each other (not recommended - see Basic information on battery supply).

1. Start by connecting the cable set to the batteries by first connecting the positive pole of the first battery to the negative pole of the second battery. Use the connecting cable supplied for this.

2. Make sure the master switch of the cable set is in the off or zero position. If necessary, switch it to the off or zero position.

3. Connect the negative connection terminal of the cable set (identified by the marking) to the negative pole of the first battery.

4. Then connect the positive connection terminal of the cable set, which includes a fuse, to the positive pole of the second battery.

5. Now connect the high current plug of the cable set to the high current plug of the motor.

6. Switch the master switch to the on position. Now your motor is ready to go.

Now the batteries are serially connected to each other: The battery capacity [Wh] and the voltage [V] of the battery block have been doubled. The battery charge [Ah] is not changed by serial configuration. (After serial configuration, two serially configured 12 V / 100 Ah batteries, each with 1,200 Wh, have 24 V, 100 Ah and 2,400 Wh.)

The cable set comes complete with a CF8 135 A fuse. In case of a short circuit, the fuse cuts the circuit and prevents any further damage.

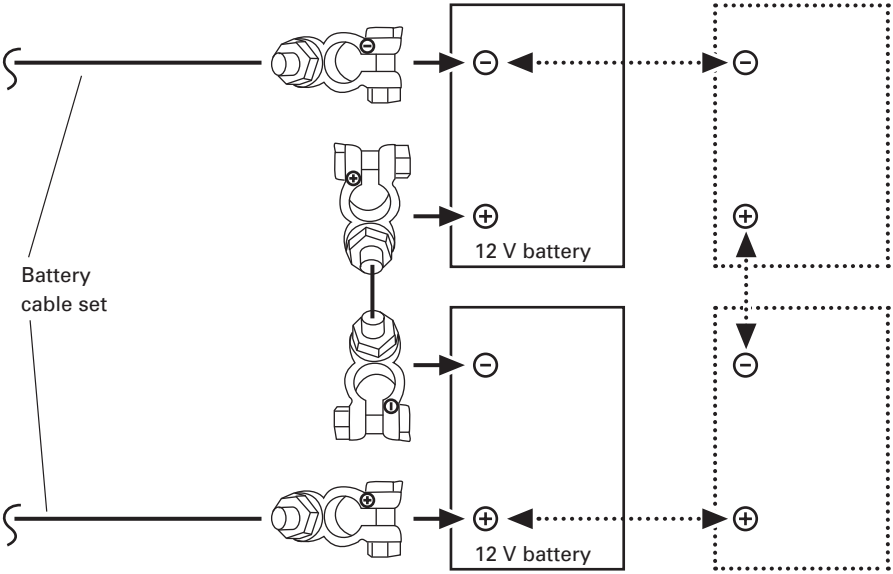

Connection of Cruise 2.0 to two 12 V batteries

Optional expansion of the battery capacity with parallel configuration using additional 12 V battery pairs.

- Serial and parallel configured batteries must always have the same charge condition. That is why you must use only the same type of batteries in configurations (same capacity, same age, same manufacturer, same charge condition) and fully charge each battery separately in your charger before you connect it up. Differences in the charge condition can lead to extremely high compensatory currents or overloads that overload the cables and connectors or the battery itself. In extreme cases, this can cause fires and injuries.
- The cable cross-section for battery configurations must be at least 25 mm^2. We recommend a cable cross-section of 35 mm^2.
- Make sure the battery poles are clean and corrosion-free.
- To fix them to the battery poles, tighten the screws on the terminals securely.

8.4 Connecting the Cruise 2.0 to lead batteries (acid, gel, AGM) without using the Torqeedo cable set

Proceed according to the instructions for connecting the Cruise 2.0 to lead batteries using the Torqeedo cable set.

Especially observe the instructions on the cable cross-section and the internationally proscribed use of a master switch and a fuse. The master switch and the fuse must be designed for a permanent load of 125 A.

Torqeedo accepts no liability for damage caused by failure to provide or inadequate fuses, failure to provide or inadequate master switches, cable cross sections that are too small or unsuitable contacts.

As an interface for the power supply, the Cruise is equipped with a high-current plug that is compatible with Tyco or Anderson plugs. You can also obtain high-current plugs as replacement parts from Torqeedo Services or your specialist dealer.

- The cable cross-section for battery configurations must be at least 25 mm^2. We recommend a cable cross-section of 35 mm^2.
- You must always use a master switch designed for a permanent load of at least 125 A.
- Always use a 125 A fuse.
- All contacts must be designed for a permanent current of 125 A.
- Serial and parallel configured batteries must always have the same charge condition. That is why you must use only the same type of batteries in configurations (same capacity, same age, same manufacturer, same charge condition) and fully charge each battery separately in your charger before you connect it up. Differences in the charge condition can lead to extremely high compensatory currents or overloads that overload the cables and connectors or the battery itself. In extreme cases, this can cause fires and injuries.
- Make sure the battery poles are clean and corrosion-free.
- To fix them to the battery poles, tighten the screws on the terminals securely.

8.5 Connecting the Cruise 2.0 to a Torqeedo Power 26-77 lithium-manganese battery

The Cruise 2.0 operates with a power supply of between 20 V and 30 V (relating to the nominal voltage). This means it can also be operated with a Torqeedo Power 26-77 lithium-manganese (LIMA)-based battery. To increase the capacity, you can configure several Torqeedo Power batteries parallel to each other.

- Incorrect configuration of lithium batteries leads to much higher short-circuit currents than configurations with lead batteries. That is why you must follow the installation instructions very carefully and only use the Torqeedo cable set to connect up your motor.

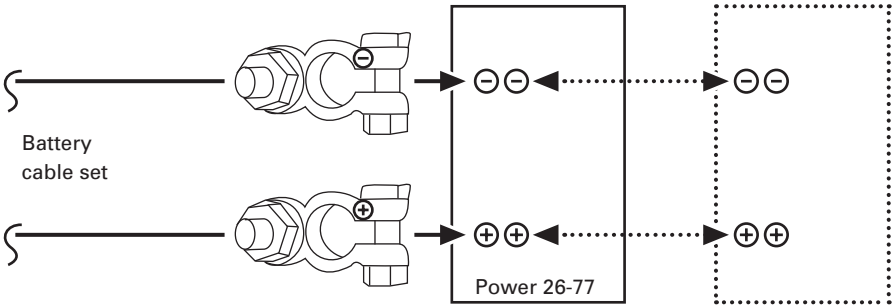

Connecting the Cruise 2.0 to Torqeedo Power 26-77

Optional extension of the battery capacity using parallel configuration with Torqeedo Power Batteries.

1. Start by connecting the cable set to the battery. First switch the cable set master switch to the off or zero position.
2. Connect the negative terminal of the cable set (identified by the marking) to one of the two negative poles of the battery. (Both negative poles are of equal value.)
3. Connect the positive terminal of the cable set (identified by the marking and the integrated fuse) to one of the positive poles of the battery. (Both positive poles are of equal value.)
4. Now connect the high current plug of the cable set to the high current plug of the motor.
5. Switch on the battery with the on/off switch.
6. Switch the master switch of the cable set to the on position. Now your motor is ready to go.

The cable set comes complete with a CF8 135 A fuse. In case of a short circuit, the fuse cuts the circuit and prevents any further damage.

You can extend the capacity using a parallel configuration of up to four Torqeedo Power Batteries from the „User Installation (UI)“ series in the same way as described under 8.3 (Connecting the Cruise 2.0 to lead batteries). Please follow the Operating instructions for the lithium-manganese batteries.

8.6 Connecting the Torqeedo remote accelerator lever to the Cruise 2.0

Optionally, you can control the power of the Cruise 2 using a remote accelerator lever available as an accessory (instead of the tiller handle).

If you use a remote accelerator lever to control the power, the voltage display integrated in the tiller is no longer active.

The remote accelerator lever is connected to the motor in two stages:
1. Disconnect the steering cable plug from the tiller.
2. Insert the steering cable plug into the remote accelerator cable socket.

If you use several Cruise motors on one boat, you should have the remote accelerator levers synchronized by an authorized Torqeedo Service Center. This ensures that the motors provide equal thrust at the same accelerator lever position. This is especially important when the motors are not mounted immediately next to each other (e.g. on catamarans).

9. Operation

9.1 Transom bracket

The power needed for steering can be adjusted with the **friction screw.** Turning the screw clockwise increases the necessary steering power up to locking the motor. Turning anti-clockwise reduces the necessary steering force.

The **tilt mechanism** allows both tilting and trimming the motor.

You can tilt the motor to remove it from the water (e.g. when it is not in use or when you land the boat in shallow water). If it is not in use for longer periods of time, we recommend fixing the motor at the 75° position using the trimming bolt.

Trimming allows you to set the motor at a right angle to the water surface. For this purpose, boreholes are provided at 5° intervals from 0° to 20°.

See section 8.1 (Fitting the drive onto the boat) to find out how to tilt and trim the motor.

- Only operate the gas spring tilt mechanism when the motor is mounted roughly vertically. Otherwise, the strong pre-tension of the gas pressure springs will cause the tilt mechanism to flip up rapidly. This can cause serious injury. On delivery from the manufacturer, the tilt mechanism release lever is secured with a cable binder. We recommend securing the release lever again when you transport or store the motor.
- Do not reach into the opening on top of the transom mount. If you do so, this can cause squashing when the tilt mechanism is activated. The opening is marked with a safety sticker.
- Make sure the tilt mechanism audibly clicks into place when you fold it down.

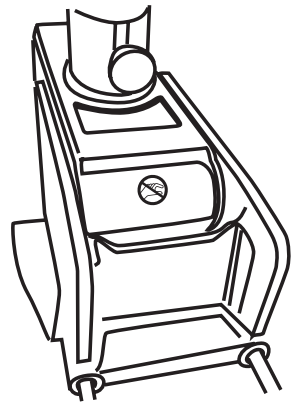

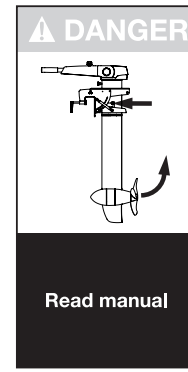

9.2 Tiller

Control the drive power by turning the tiller handle. The propeller speed and direction of turn (forward/backward) can be controlled in an infinitely variable way. Corresponding markings on the tiller handle indicate this.

- The high thrust power of the drive makes it necessary to familiarize yourself with the characteristics of your Cruise 2.0. Practice handling the motor and maneuvering in open water.

You can swing the tiller up in **infinitely variable stages by up to 90°.** To do this, first loosen the clamping screws. After you have moved the tiller to the required position, tighten the clamping screws securely again.

Use the release button on the underside of the tiller handle to **adjust the length of the tiller handle.** Press this button into the aluminum tube to adjust the length in three stages.

- Ensure that the button engages again.

You can shut down the drive quickly by pulling the **on/off pin.** Simply remove this pin by pulling it out. The drive will only start again when the pin is re-inserted. The tiller must be positioned in stop-mode to do this.

A voltage display is integrated in the top of the tiller. The voltage display is not an exact indicator of the residual capacity of your batteries. The voltage loss of the batteries at increasing discharging depends strongly on the condition of the battery (technology, quality, type, ambient conditions, etc.) and is not linear. However, in the absence of a more sophisticated battery management system, the voltage display is the best way of roughly estimating the residual travel time of your drive system.

9.3 Pylon

The **motor** and the **electronic control system** are located in the pylon. They generate the propulsion. In addition, several protective functions are integrated:

1. **Temperature protection:** If the motor overheats, the motor control system reduces the output of the drive until a temperature equilibrium is established between generated and disposed heat.
2. **Undervoltage protection:** If the voltage falls below 16 V, the electronic controller switches the drive off to prevent overdischarging the batteries. Even beforehand, the output of the motor is regulated to avoid high currents of over 120 A.
3. **Blocking protection:** If the propeller is blocked or stuck, the motor would normally take in too much power. In this case, the motor is switched off within a few hundredths of a second to protect the electronics, motor winding and propeller. After unblocking, the motor can be re-started out of the stop position after about 2 seconds.
4. **Cable damage protection:** If the steering cable is damaged, i.e. if the connection to the tiller is cut, the motor will not start, or it stops.
5. **Acceleration control:** The alteration speed at which the speed of the propeller adjusts to a changed tiller position is limited in order to protect mechanical drive parts and to avoid short-term peak current.

- If the motor malfunctions, first shift the tiller handle onto the stop position for approx. 2 seconds. The stop position has a reset function and can correct minor faults itself.

The **Fin** supports steering movements and protects the propeller when it comes into contact with the bottom.

The **sacrificial anode** protects the metallic components that are located under the water from corrosion, especially in salt water.

- Only run the motor when the propeller is under water. If it is run in the air, the shaft sealant rings that seal the motor to the drive shaft are damaged. If the motor is run in the air for a longer period, the motor itself can overheat.
- After using the motor, it must be removed from the water. You can do this using the tilt mechanism of the transom mount.

10. Dismantling

1. Pull out the on/off pin and switch the battery master switch to the off or zero position.
2. Unplug the connection between the motor and the cable set.
3. Secure the release lever of the tilt mechanism against inadvertent pressing using a cable binder or wire etc.
4. Unhinge the motor and place it on a flat surface.

- The pylon may be hot.
- Only operate the gas spring tilt mechanism when the motor is mounted roughly vertically. Otherwise, the strong pre-tension of the gas pressure springs will cause the tilt mechanism to flip up rapidly. This can cause serious injury. On delivery from the manufacturer, the tilt mechanism release lever is secured with a cable binder. We recommend securing the release lever again when you transport or store the motor.

- Make sure the motor is dry before you store it.
- Ensure you do not bend the cable around sharp edges.

11. Storage and care instructions

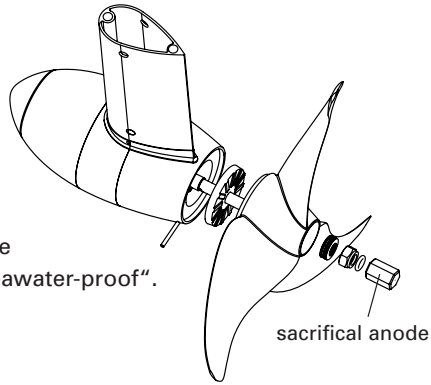

11.1 Corrosion protection

Materials were chosen with a high level of corrosion-resistance. Most of the materials used in the Cruise 2.0 are, as with most leisure maritime products, classed as „seawater resistant“, not „seawater-proof“.

- After use, always take the motor out of the water. You can do this using the tilt mechanism of the transom mount.
- After use in salt or brackish water, rinse the motor (but never the tiller) with fresh water.
- Only store the motor in a dry condition.
- Treat the following parts with contact spray once a month:
  – Gas pressure springs of the tilt mechanism
  – Contacts on the power cable
  – Plug on the steering cable
- We recommend checking the sacrificial anode once a year. The sacrificial anode is fitted to the drive shaft of the propeller. Only use Torqeedo sacrificial anodes - you can order these from your dealer or the Torqeedo Service Team.

11.2 Other care instructions

To clean the motor you can use any cleaning agents suitable for plastic - follow the manufacturer‘s instructions. Cockpit sprays available for cars achieve good results on the plastic surfaces of the Torqeedo Cruise.

12. Trouble shooting

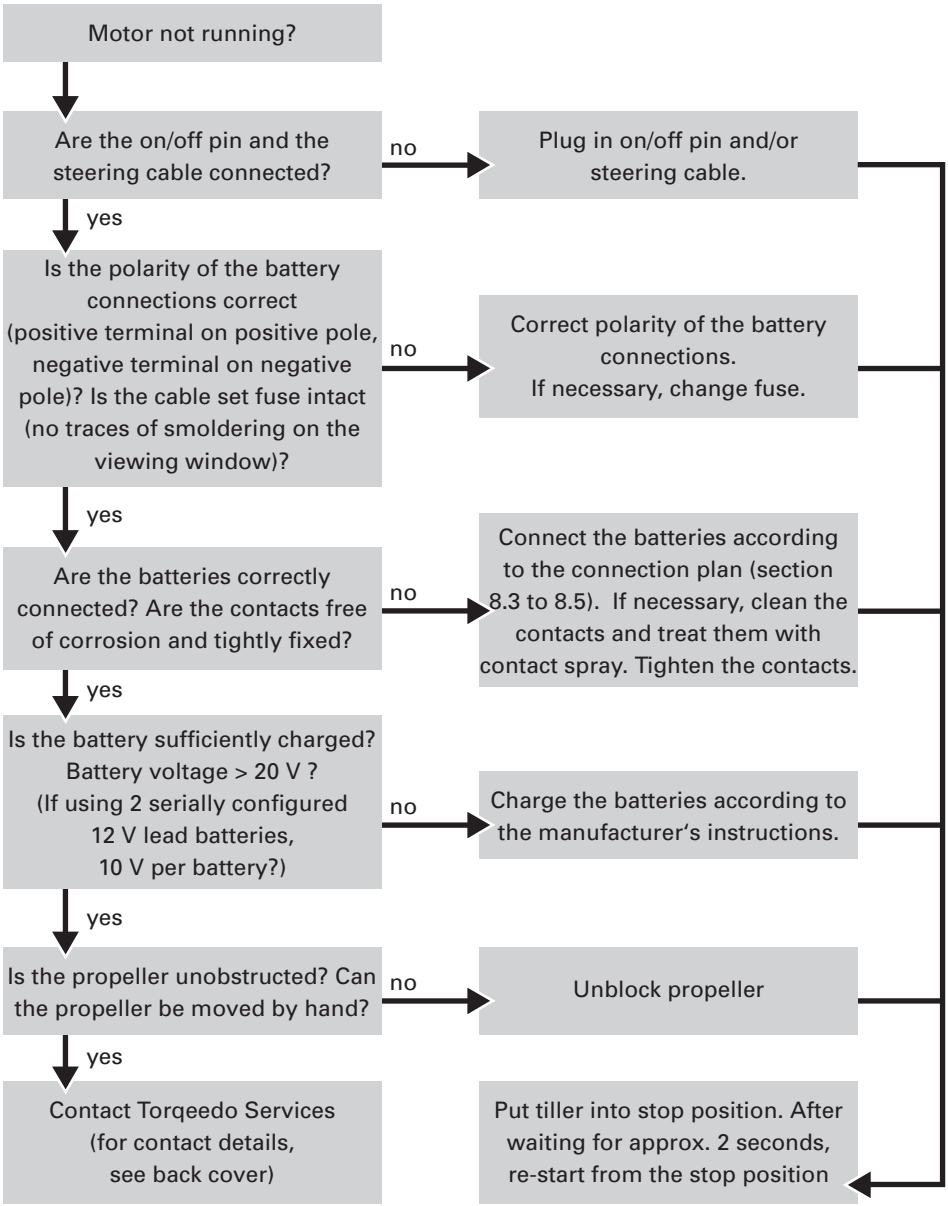

26

- Repairs may only be carried out by authorized Torqeedo Service Centers. Should you attempt to carry out repairs or conversions yourself, this immediately cancels the warranty.
- In case of a warranty claim, please follow the warranty instructions at the beginning of the instruction manual.

13. Technical data

	Cruise 2.0 S	Cruise 2.0 L
Input power in watts	2,000	2,000
Rated power in volts	24.0	24.0
Propulsive power in watts*	900	900
Maximum overall efficiency in %	45%	45%
Static thrust in lbf	121	121
Total weight in lbs	40	42
Maximum shaft length in inches	24.6	29.3
Integrated battery	no	no
Propeller dimensions in inches	12 x 10	12 x 10
Propeller speed at full power in rpm	max. 920	max. 920
Control	Tiller control / remote throttle control	Tiller control / remote throttle control
Steering	360° lockable	360° lockable
Tilting system	gas pressure spring	gas pressure spring
Trim system	manual 5-step	manual 5-step
Stepless drive forwards/reverse	yes	yes

* The effective power available for boat propulsion (measured after deducting all deficits including propeller deficits. Definition of propulsion output = thrust power x speed)

14. Disposal instructions

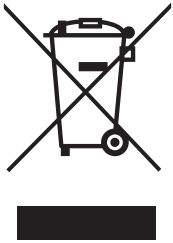

Torqeedo Cruise motors are manufactured in accordance with EU Directive 2002/96. This directive regulates the disposal of electrical and electronic devices for the protection of the environment.

You can, in line with regional regulations, hand in the motor at a collecting point. From there it will be professionally disposed of.

15. Accessories

Article No.	Product	Description
1203	**Cable set Cruise 2.0**	Cable set for connection of Cruise 2.0 to standard lead batteries or to Torqeedo Power battery; 10 ft long, made of high-current resistant connection cable equivalent to American Wire Gauge 2 (35 mm^2 cross-sectional area), with fuse, battery connection cables for series connection of two 12 V lead batteries, complete with high-current plugs and connection plan
1205	**Cable set extension for Cruise 2.0**	Extension for Cruise cable set, 6 ft long, complete with high-current plugs
1901	**Replacement propeller**	Variable-Pitch-Variable-Camber (VPVC) Propeller, developed especially for the torque characteristic and performance range of Torqeedo-motors; made of high-impact resistant, glass-fiber rein-forced PBT (Polybutylene terephthalate), complete with nuts, disc springs and cylinder pin
1902	**Electronic remote throttle control LT**	Remote-control switch for Cruise 2.0, for left or top assembly, pre-wired incl. 20 ft control cable
1903	**Electronic remote throttle control RT**	Remote-control switch for Cruise 2.0, for right or top assembly, pre-wired incl. 20 ft control cable
1904	**Assembly plate for double electronic throttle control**	For easy assembly of a double remote throttle control, controlling two motors simultaneously

Torqeedo Service Centers

Europe and international

Torqeedo GmbH
– Service Center –
Friedrichshafener Straße 4a
82205 Gilching - Germany

service@torqeedo.com
T +49 - 8153 - 92 15 - 100
F +49 - 8153 - 92 15 - 319

North America

Torqeedo Inc.
171 Erick Street, Unit A-1
Crystal Lake, IL 60014 - USA

service_usa@torqeedo.com
T +1 - 815 – 444 88 06
F +1 - 847 – 444 88 07