US005796094A

United States Patent [19]

Schofield et al.

[11] Patent Number: 5,796,094

[45] Date of Patent: Aug. 18, 1998

[54] VEHICLE HEADLIGHT CONTROL USING IMAGING SENSOR

[75] Inventors: **Kenneth Schofield**, Holland; **Mark L. Larson**, Grand Haven; **Keith J. Vadas**, Coopersville, all of Mich.

[73] Assignee: **Donnelly Corporation**, Holland, Mich.

[21] Appl. No.: **621,863**

[22] Filed: **Mar. 25, 1996**

Related U.S. Application Data

[63] Continuation-in-part of Ser. No. 23,918, Feb. 26, 1993, Pat. No. 5,550,677.

[51] **Int. Cl.**[6] **B60Q 1/02**; H05B 37/02

[52] **U.S. Cl.** ..... **250/208.1**; 250/214 AL; 250/226; 362/61; 315/82

[58] **Field of Search** ..... 250/226, 205, 250/208.1, 208.2, 214 D, 214 AL, 216; 356/218, 221, 222, 225; 315/82, 83; 362/61, 64, 65, 71

[56] **References Cited**

U.S. PATENT DOCUMENTS

4,037,134	7/1977	Löper .	
4,236,099	11/1980	Rosenblum .	
4,357,558	11/1982	Massoni et al. .	
4,727,290	2/1988	Smith et al. .	
4,862,037	8/1989	Farber et al. .	
4,891,559	1/1990	Matsumoto et al.	315/82
4,967,319	10/1990	Seko	362/61
5,072,154	12/1991	Chen .	
5,086,253	2/1992	Lawler .	
5,124,549	6/1992	Michaels et al. .	
5,182,502	1/1993	Slotkowski et al. .	
5,426,294	6/1995	Kobayashi et al. .	
5,537,003	7/1996	Bechtel et al.	315/82

OTHER PUBLICATIONS

Article entitled "Generation of Vision Technology," published by VLSI Vision Limited, publication date unknown.

Article entitled "On-Chip CMOS Sensors for VLSI Imaging Systems" published by VLSI Vision Limited, 1991, (no month).

Commonly assigned United States patent application Serial No. 08/023,918 filed on Feb. 26, 1993, by Kenneth (NMI) Schofield and Mark L. Larson for an Automatic Rearview Mirror System Using a Photosensor Array.

Commonly assigned Unites States patent application Serial No. 08/478,093 filed Jun. 7, 1995, by Kenneth (NMI) Schofield and Mark L. Larson for an Automatic Rearview Mirror, Vehicle Lighting Control and Vehicle Interior Monitoring System Using Photosensor Array.

Primary Examiner—Edward P. Westin
Assistant Examiner—John R. Lee
Attorney, Agent, or Firm—Van Dyke, Gardner, Linn & Burkhart, LLP

[57] **ABSTRACT**

A vehicle headlamp control method and apparatus includes providing an imaging sensor that senses light in spatially separated regions of a field of view forward of the vehicle. Light levels sensed in individual regions of the field of view are evaluated in order to identify light sources of interest, such as oncoming headlights and leading taillights. The vehicle's headlights are controlled in response to identifying such particular light sources or absence of such light sources. Spectral signatures of light sources may be examined in order to determine if the spectral signature matches that of particular light sources such as the spectral signatures of headlights or taillights. Sensed light levels may also be evaluated for their spatial distribution in order to identify light sources of interest.

53 Claims, 11 Drawing Sheets

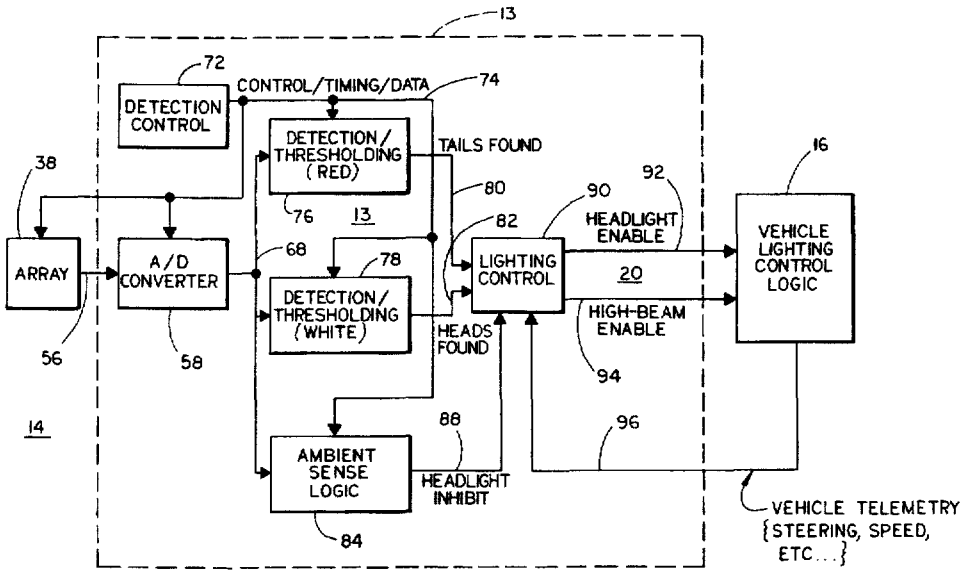

MOBILEYE EXHIBIT 1006

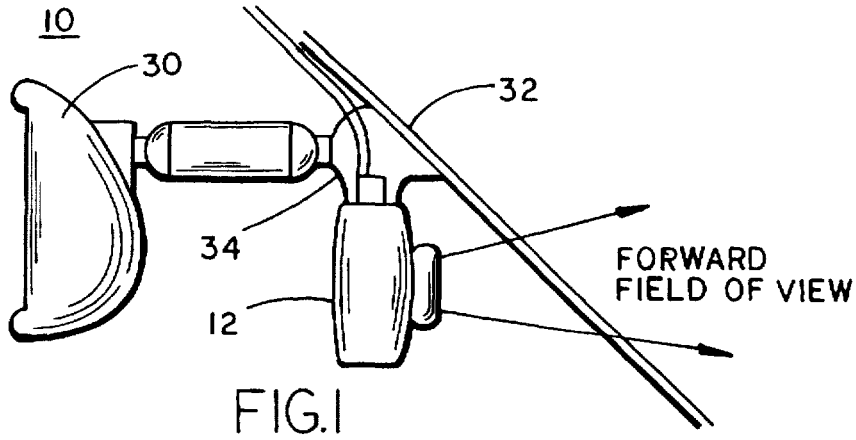
10
30
32
34
12
FORWARD
FIELD OF VIEW

FIG.1

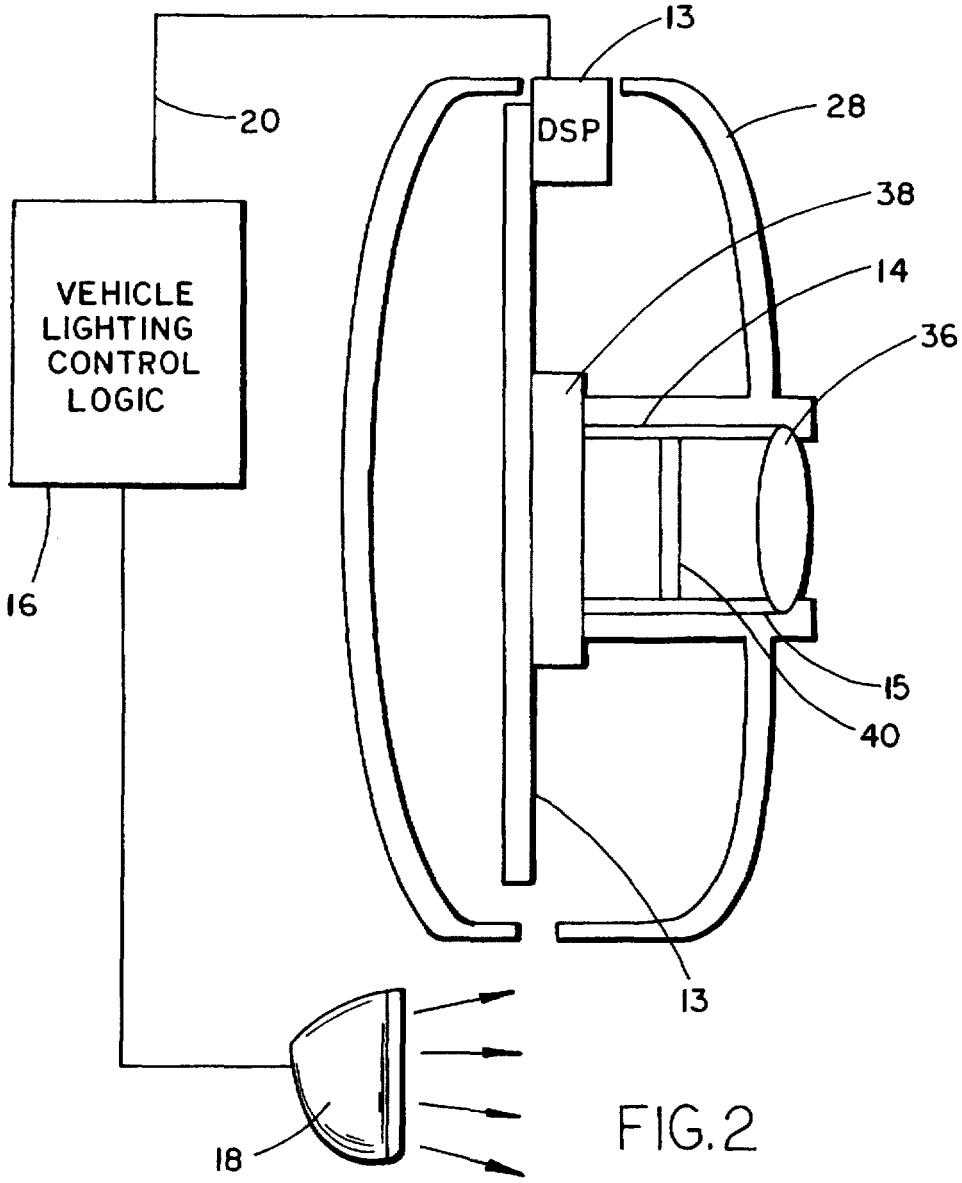
13
20
DSP
28
38
14
36
VEHICLE
LIGHTING
CONTROL
LOGIC
16
15
40
13
18

FIG.2

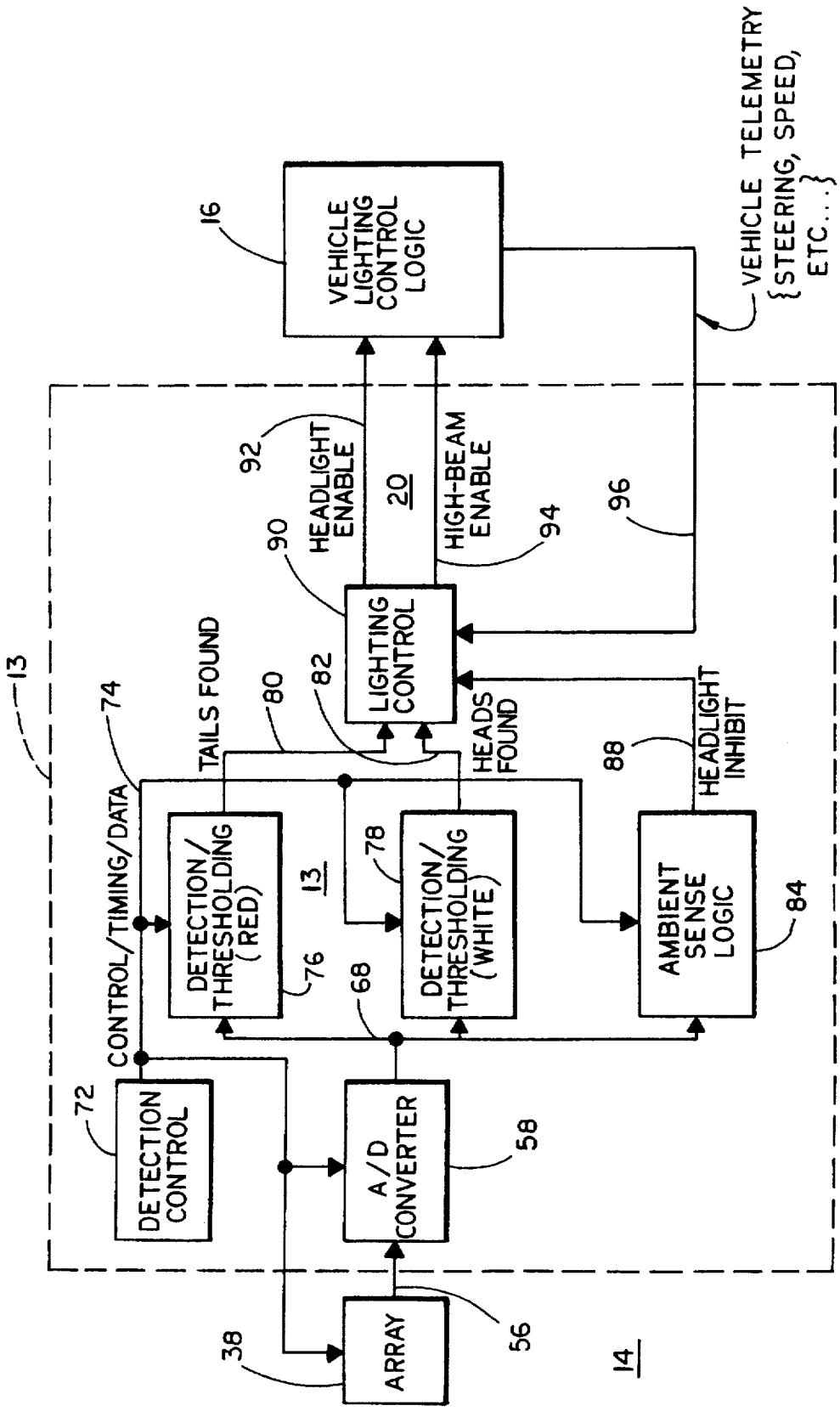
VEHICLE LIGHTING CONTROL LOGIC
16
VEHICLE TELEMETRY {STEERING, SPEED, ETC....}
HEADLIGHT ENABLE
92
20
HIGH-BEAM ENABLE
94
96
90
LIGHTING CONTROL
13
74
TAILS FOUND
80
82
HEADS FOUND
88
HEADLIGHT INHIBIT
CONTROL/TIMING/DATA
DETECTION/ THRESHOLDING (RED)
76
13
78
DETECTION/ THRESHOLDING (WHITE)
68
AMBIENT SENSE LOGIC
84
72
DETECTION CONTROL
A/D CONVERTER
58
38
ARRAY
56
14

FIG. 3

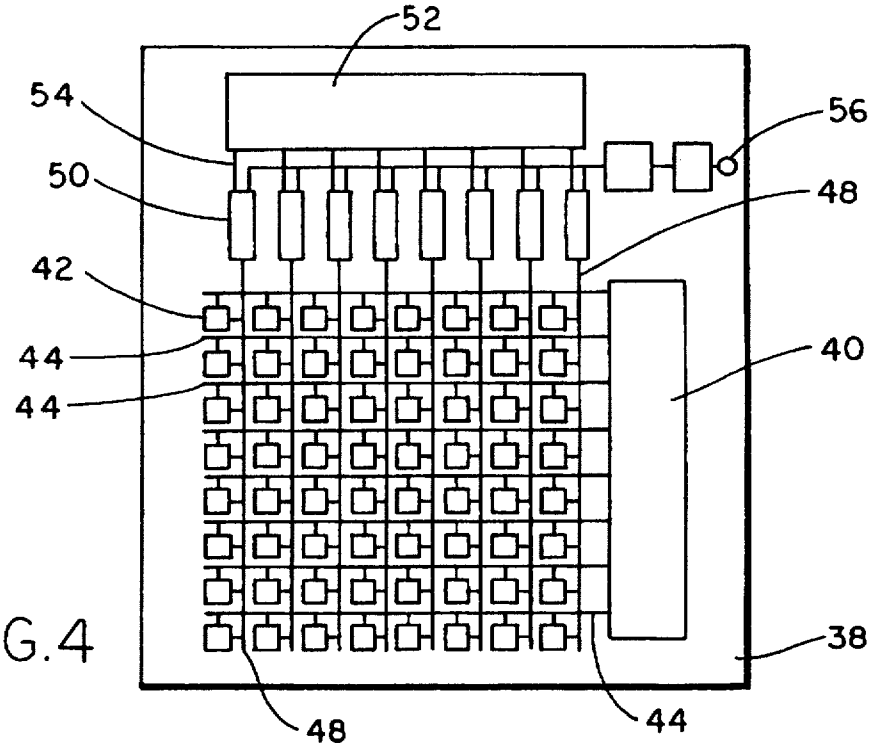
52
54
56
50
48
42
44
44
40
38
48
44

FIG. 4

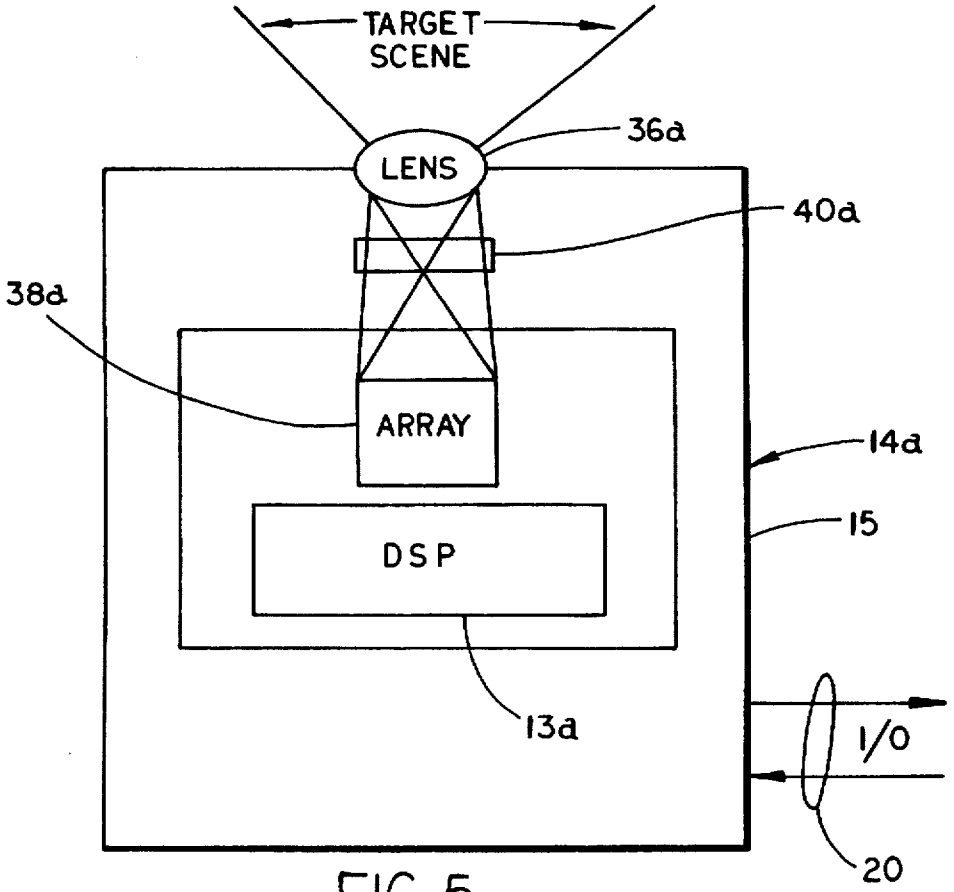
TARGET SCENE
36a
LENS
40a
38a
ARRAY
14a
15
DSP
13a
I/O
20

FIG. 5

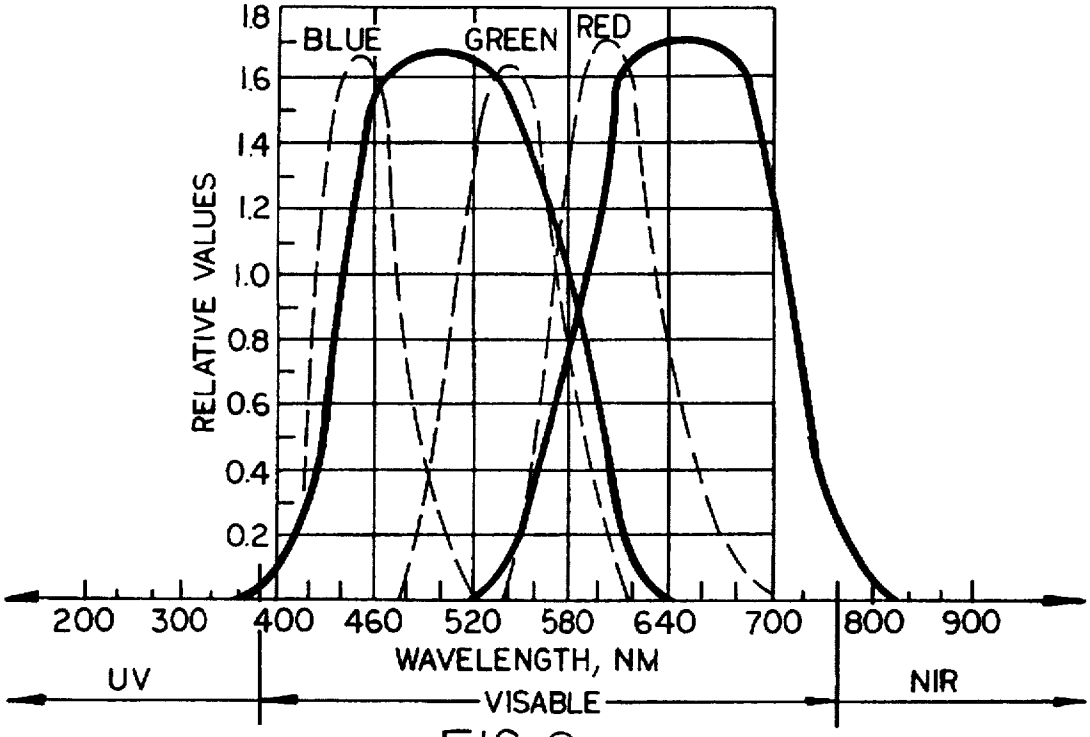
BLUE
GREEN
RED
RELATIVE VALUES
1.8
1.6
1.4
1.2
1.0
0.8
0.6
0.4
0.2
200 300 400 460 520 580 640 700 800 900
WAVELENGTH, NM
UV
VISABLE
NIR

FIG. 8c

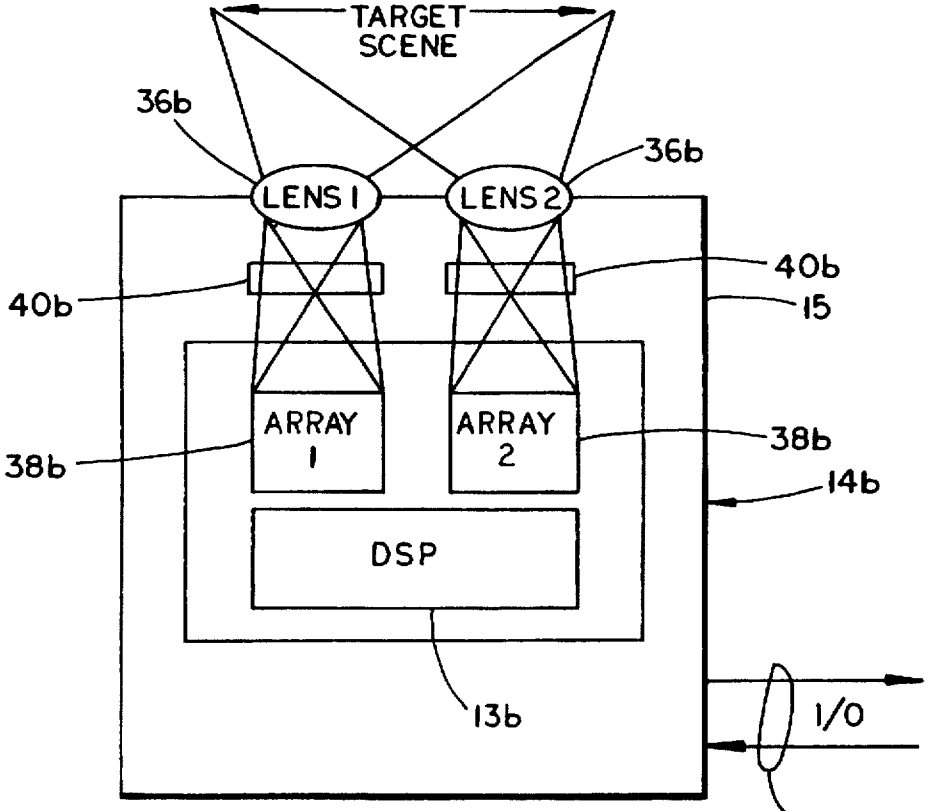
TARGET SCENE
36b
36b
LENS 1
LENS 2
40b
40b
15
ARRAY 1
ARRAY 2
38b
38b
14b
DSP
13b
I/O
20

FIG. 6

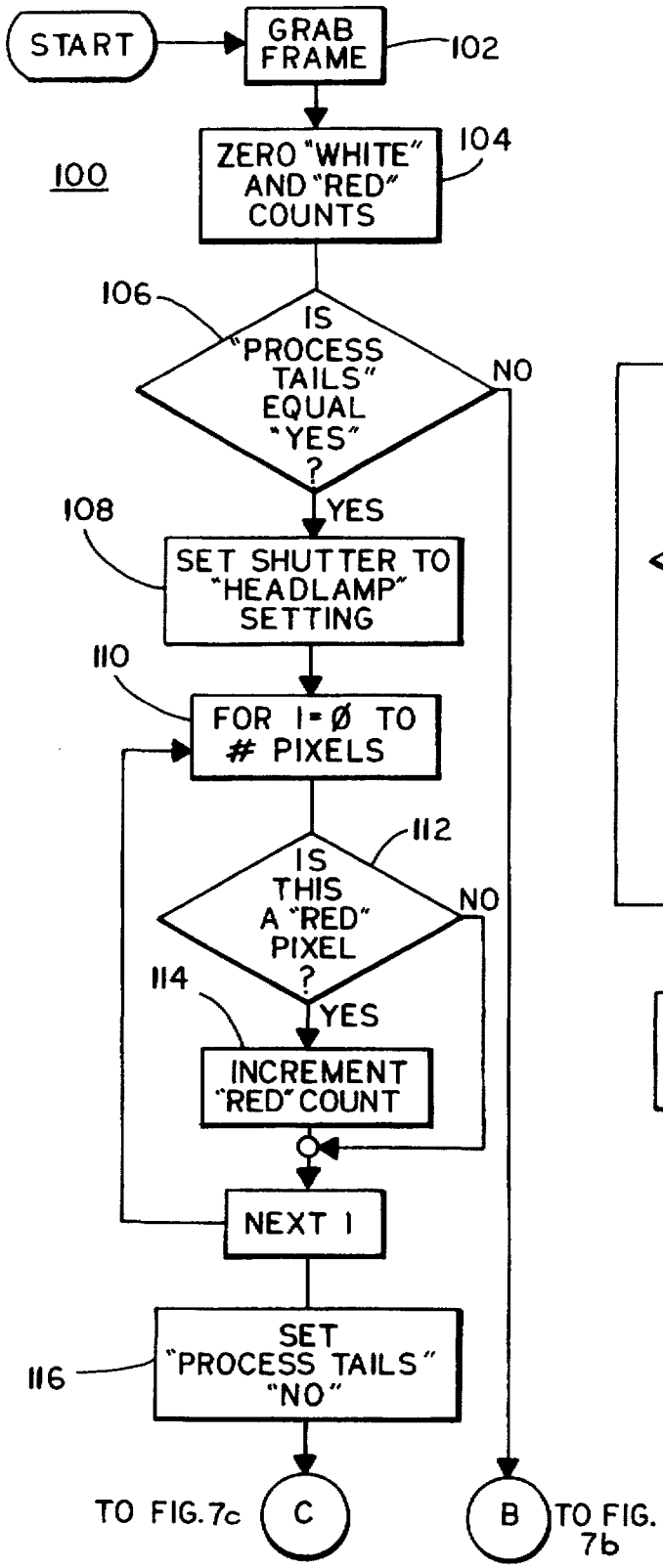
START
GRAB FRAME
102
100
ZERO "WHITE" AND "RED" COUNTS
104
106
IS "PROCESS TAILS" EQUAL "YES" ?
NO
YES
108
SET SHUTTER TO "HEADLAMP" SETTING
110
FOR I=Ø TO # PIXELS
112
IS THIS A "RED" PIXEL ?
NO
114
YES
INCREMENT "RED" COUNT
NEXT I
116
SET "PROCESS TAILS" "NO"
TO FIG. 7c
C
B
TO FIG. 7b

FIG. 7a

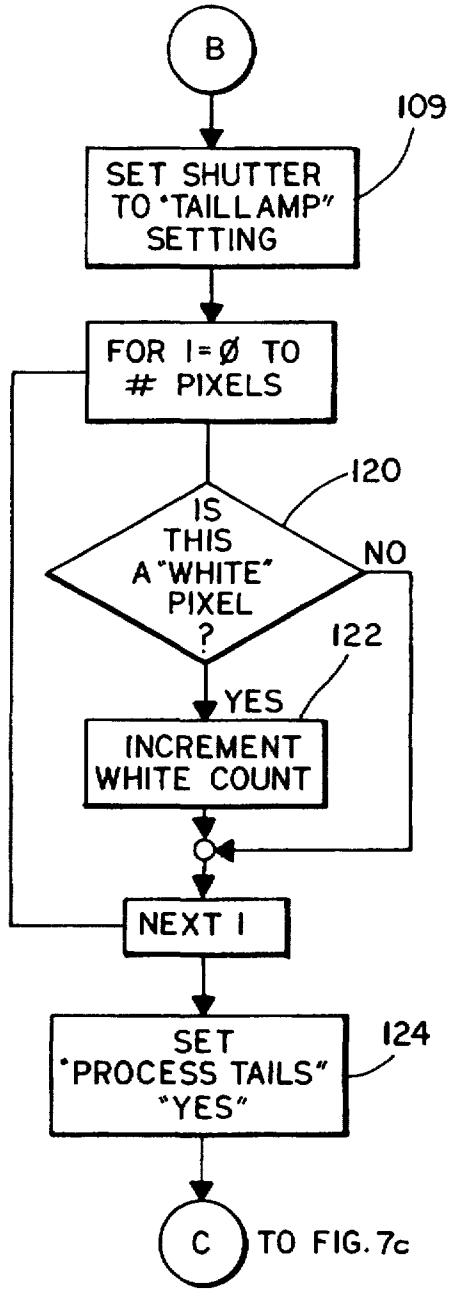
B
109
SET SHUTTER TO "TAILLAMP" SETTING
FOR I=Ø TO # PIXELS
120
IS THIS A "WHITE" PIXEL ?
NO
122
YES
INCREMENT WHITE COUNT
NEXT I
124
SET "PROCESS TAILS" "YES"
C
TO FIG. 7c

FIG. 7b

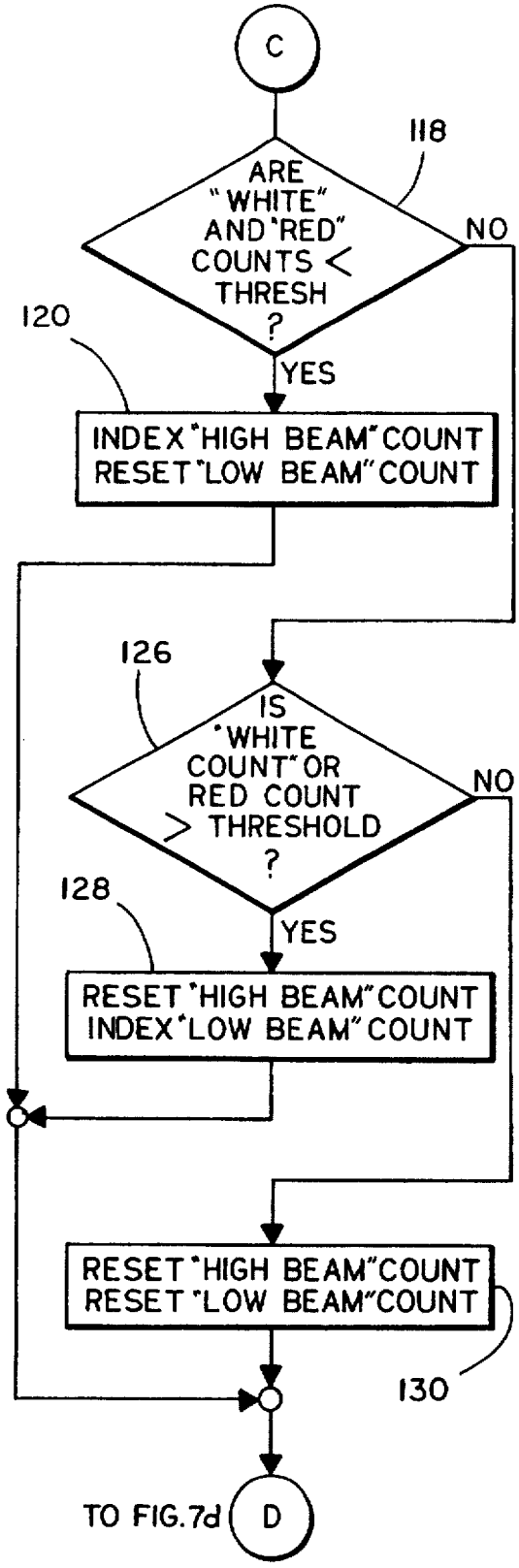
C
118
ARE "WHITE" AND "RED" COUNTS < THRESH ?
NO
YES
120
INDEX "HIGH BEAM" COUNT
RESET "LOW BEAM" COUNT
126
IS "WHITE COUNT" OR RED COUNT > THRESHOLD ?
NO
YES
128
RESET "HIGH BEAM" COUNT
INDEX "LOW BEAM" COUNT
RESET "HIGH BEAM" COUNT
RESET "LOW BEAM" COUNT
130
TO FIG.7d
D

FIG.7c

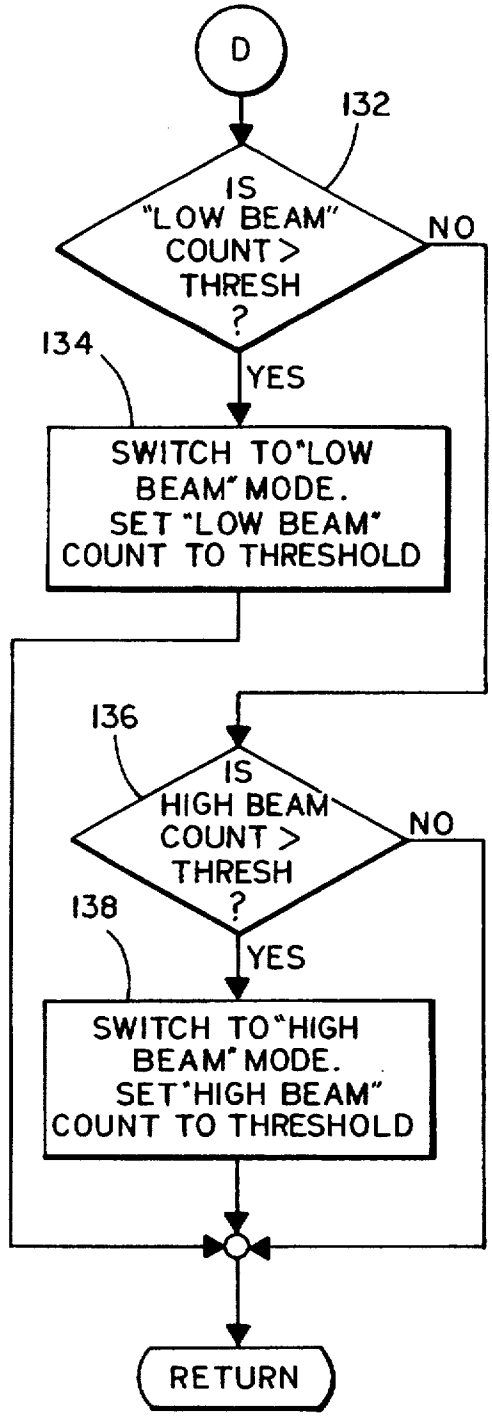
D
132
IS "LOW BEAM" COUNT > THRESH ?
NO
YES
134
SWITCH TO "LOW BEAM" MODE. SET "LOW BEAM" COUNT TO THRESHOLD
136
IS HIGH BEAM COUNT > THRESH ?
NO
YES
138
SWITCH TO "HIGH BEAM" MODE. SET "HIGH BEAM" COUNT TO THRESHOLD
RETURN

FIG.7d

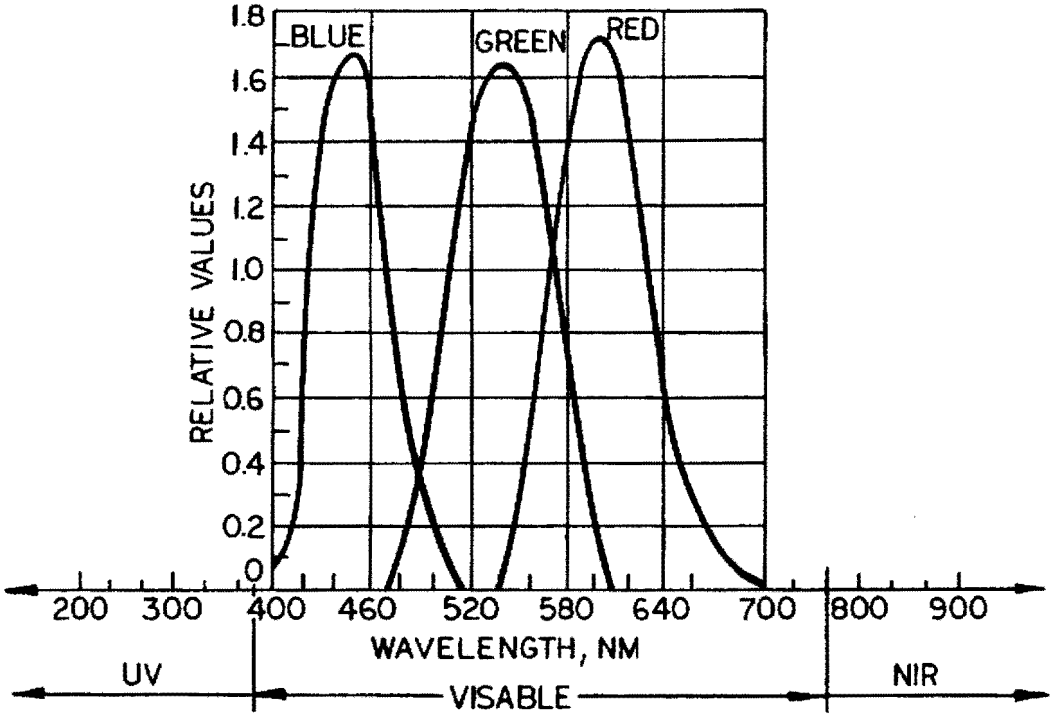
BLUE
GREEN
RED
RELATIVE VALUES
1.8
1.6
1.4
1.2
1.0
0.8
0.6
0.4
0.2
0
200 300 400 460 520 580 640 700 800 900
WAVELENGTH, NM
UV
VISABLE
NIR

FIG. 8a

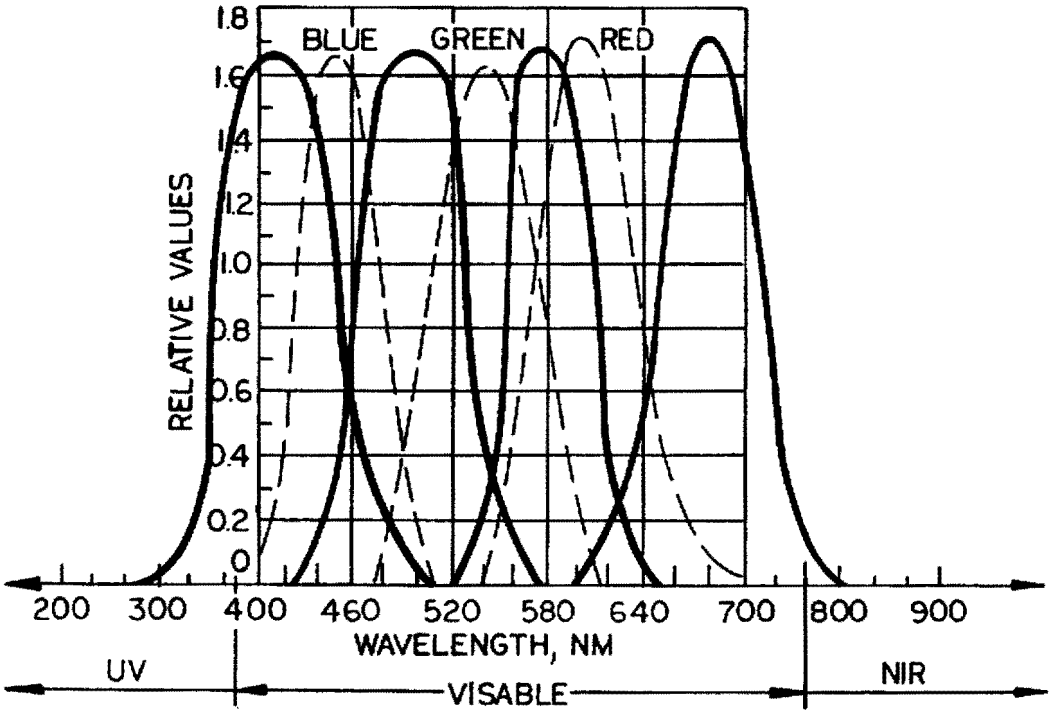
BLUE
GREEN
RED
RELATIVE VALUES
1.8
1.6
1.4
1.2
1.0
0.8
0.6
0.4
0.2
0
200 300 400 460 520 580 640 700 800 900
WAVELENGTH, NM
UV
VISABLE
NIR

FIG. 8b

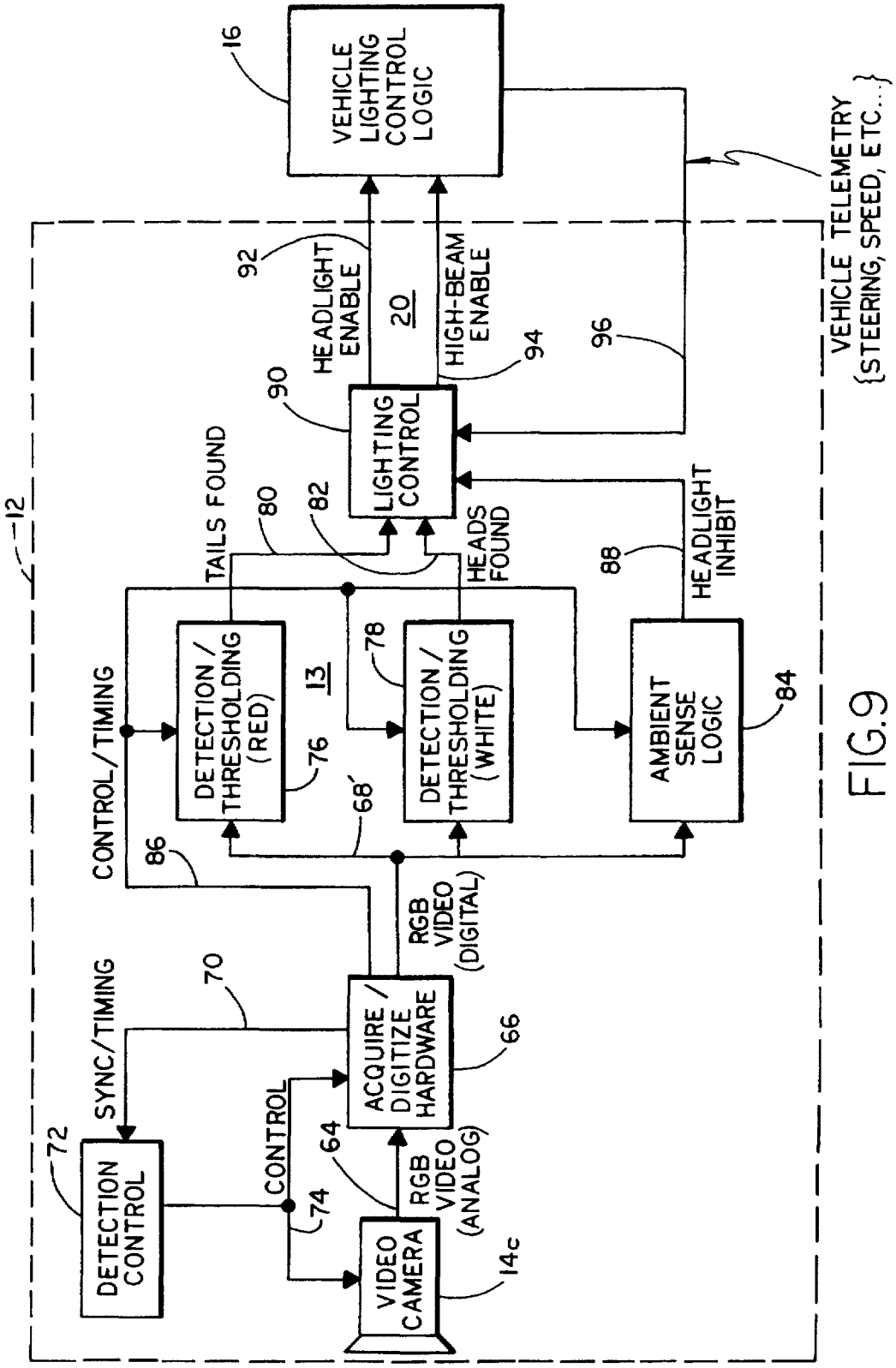
VEHICLE LIGHTING CONTROL LOGIC
16
VEHICLE TELEMETRY {STEERING, SPEED, ETC...}
HEADLIGHT ENABLE
92
20
HIGH-BEAM ENABLE
94
96
LIGHTING CONTROL
90
12
TAILS FOUND
80
82
HEADS FOUND
88
HEADLIGHT INHIBIT
CONTROL/TIMING
DETECTION / THRESHOLDING (RED)
13
76
78
DETECTION / THRESHOLDING (WHITE)
AMBIENT SENSE LOGIC
84
68'
86
RGB VIDEO (DIGITAL)
SYNC/TIMING
70
ACQUIRE / DIGITIZE HARDWARE
66
CONTROL
64
RGB VIDEO (ANALOG)
72
DETECTION CONTROL
74
VIDEO CAMERA
14c

FIG.9

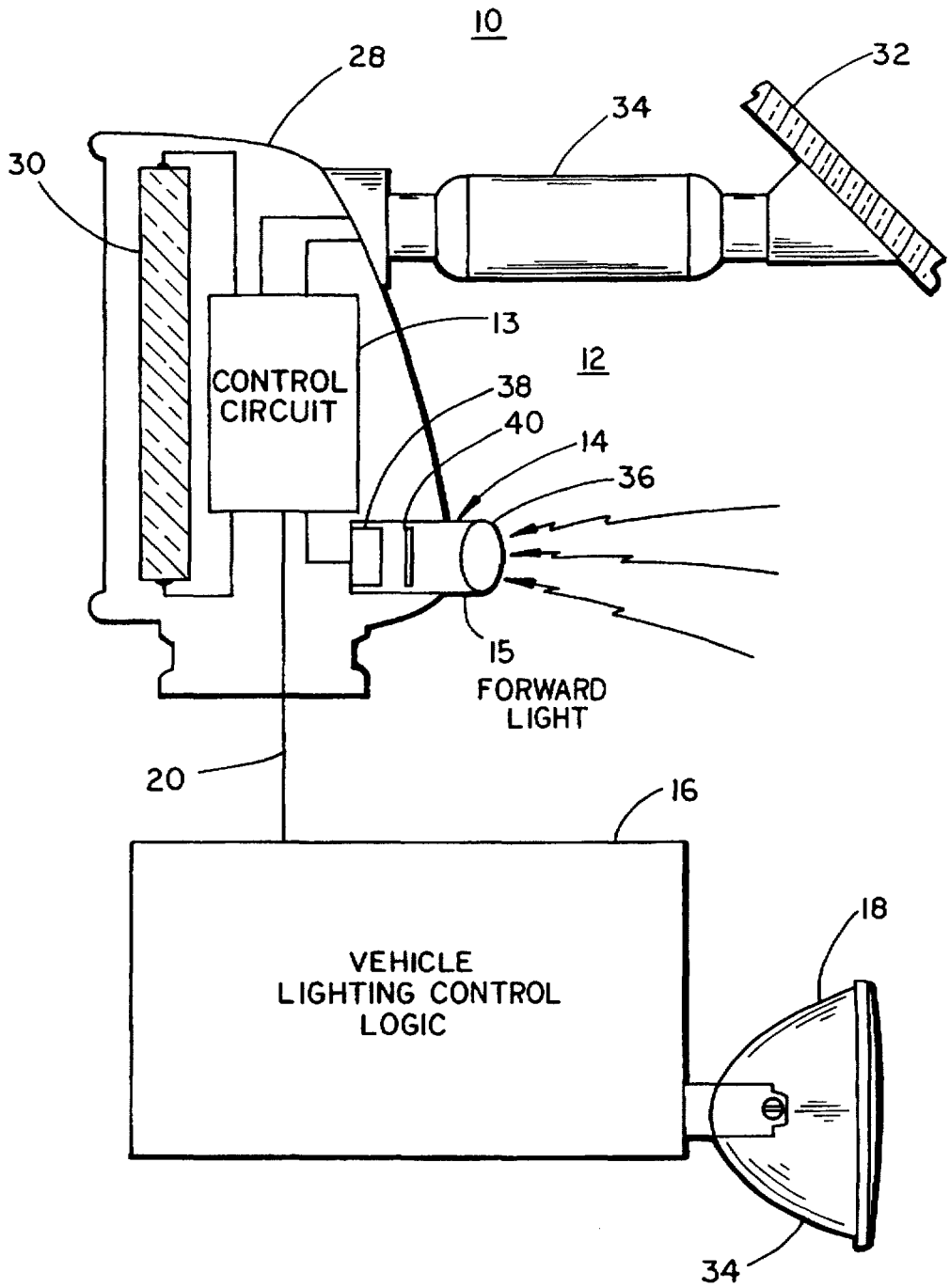
10
28
32
34
30
13
12
CONTROL
CIRCUIT
38
40
14
36
15
FORWARD
LIGHT
20
16
18
VEHICLE
LIGHTING CONTROL
LOGIC
34

FIG. 10

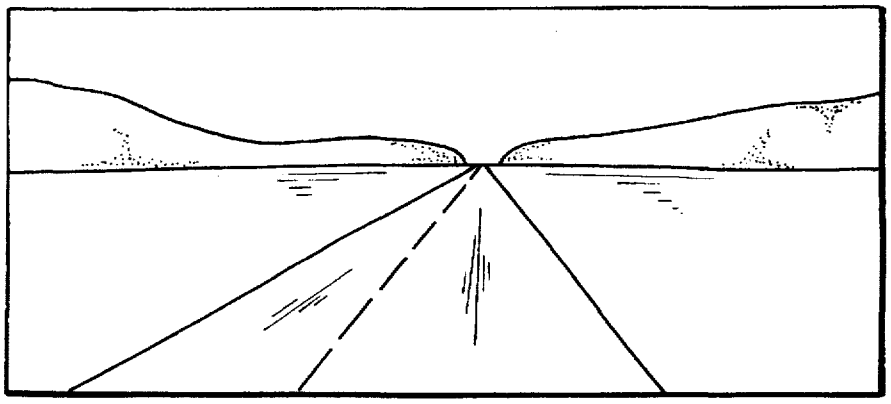

FIG. 11a

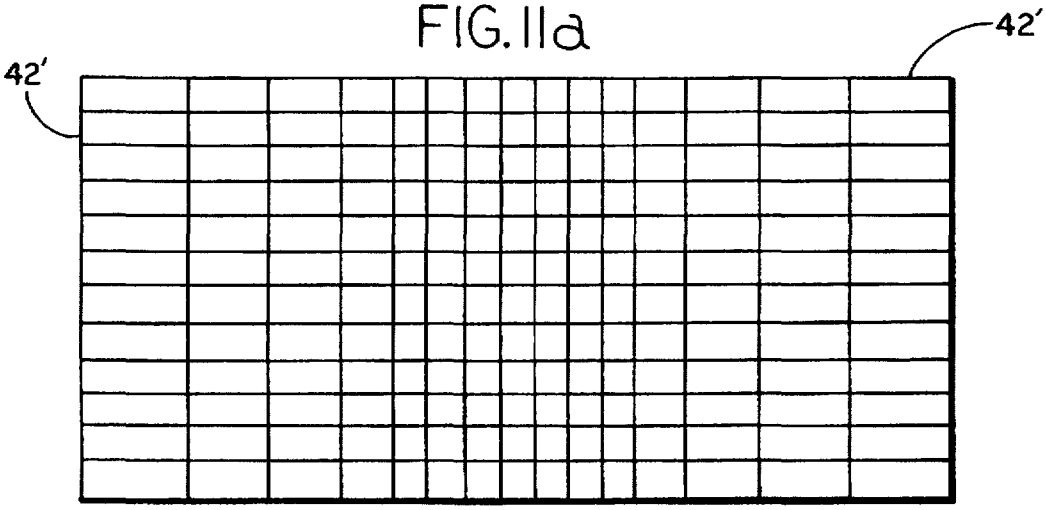

FIG. 11b

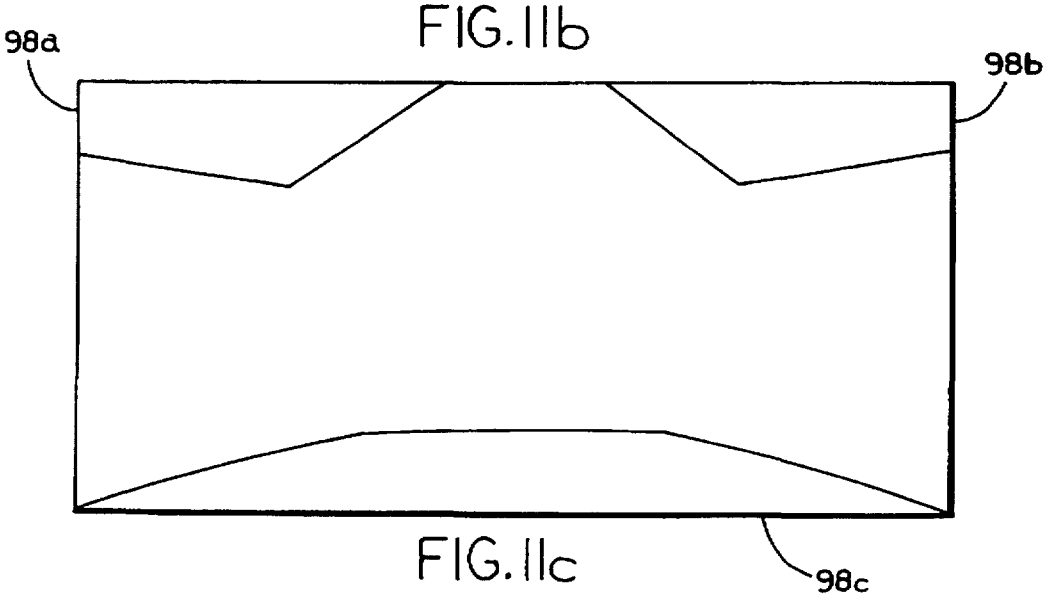

FIG. 11c

NORMAL (DRY) CONDITIONS:

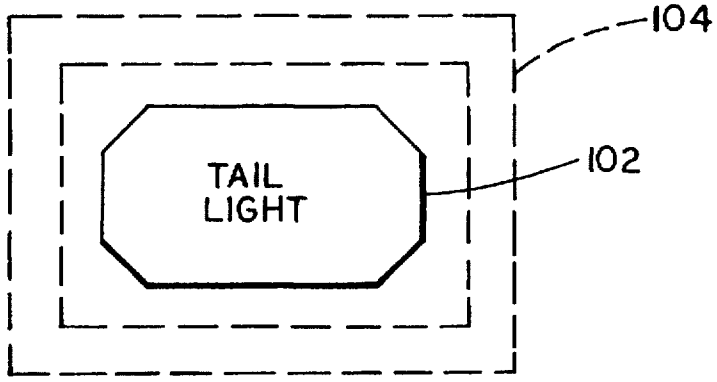

FIG. 12a

FOGGY CONDITIONS:

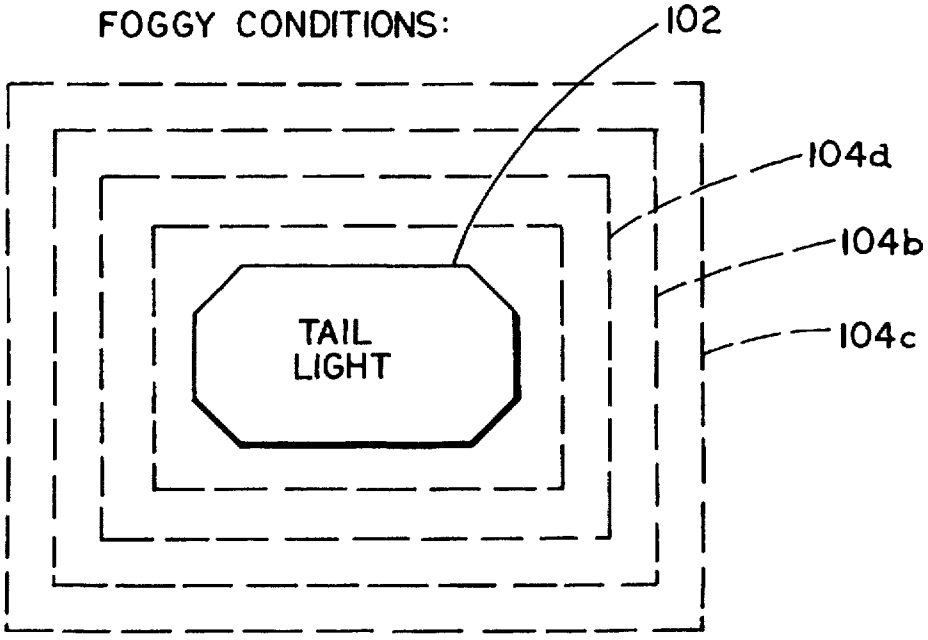

FIG. 12b

VEHICLE HEADLIGHT CONTROL USING IMAGING SENSOR

CROSS-REFERENCE TO RELATED APPLICATION

This application is a continuation-in-part of application Ser. No. 08/023,918 filed Feb. 26, 1993, by Kenneth Schofield and Mark Larson now U.S. Pat. No. 5,550,677.

BACKGROUND OF THE INVENTION

This invention relates generally to vehicle control systems and, in particular, to a system and method for controlling the headlights of the vehicles. The invention is particularly adapted to controlling the vehicle's headlamps in response to sensing the headlights of oncoming vehicles and taillights of leading vehicles.

It has long been a goal to automatically control the state of a vehicle's headlights in order to accomplish automatically that which is manually performed by the driver. In particular, the driver of a vehicle whose headlights are in a high-beam state will dim the headlights upon conscious realization that the headlights are a distraction to the driver of an oncoming vehicle or a leading vehicle. It is desirable to relieve the driver of such duties and thereby allow the driver to concentrate on the driving task at hand. The ideal automatic control would also facilitate the use of high beams in conditions which allow their use, increasing the safety for the controlled vehicle as well as reducing the hazard caused by the occasional failure of the driver to dim the headlights when such headlights are distracting another driver.

Prior attempts at vehicle headlight dimming controls have included a single light sensor which integrates light in the scene forward of the vehicle. When the integrated light exceeds a threshold, the vehicle headlights are dimmed. Such approaches have been ineffective. The headlights of oncoming vehicles are, at least from a distance, point sources of light. In order to detect such light sources in an integrated scene, it is necessary to set a sufficiently low threshold of detection that many non-point-sources at lower intensities are interpreted as headlights or taillights. Such prior art vehicle headlight dimming controls have also been ineffective at reliably detecting the taillights of leading vehicles. The apparent reason is that the characteristics of these two light sources; for example, intensity, are so different that detecting both has been impractical. In order to overcome such deficiencies, additional solutions have been attempted, such as the use of infrared filtering, baffling of the optic sensor, and the like. While such modifications may have improved performance somewhat, the long-felt need for a commercially useful vehicle headlight dimming control has gone unmet.

SUMMARY OF THE INVENTION

The present invention provides a vehicle control which is capable of identifying unique characteristics of light sources based upon a precise evaluation of light source characteristics made in each portion of the scene forward of the vehicle, in the vicinity of each light source, by separating each light source from the remainder of the scene and analyzing that source to determine its characteristics. One characteristic used in identifying a light source is the spectral characteristics of that source which is compared with spectral signatures of known light sources, such as those of headlights and taillights. Another characteristic used in identifying a light source is the spatial layout of the light source. By providing

the ability to identify the headlights of oncoming vehicles and the taillights of leading vehicles, the state of the headlights of the controlled vehicle may be adjusted in response to the presence or absence of either of these light sources or the intensity of these light sources.

This is accomplished according to an aspect of the invention by providing an imaging sensor which divides the scene forward of the vehicle into a plurality of spatially separated sensing regions. A control circuit is provided that is responsive to the photosensors in order to determine if individual regions include light levels having a particular intensity. The control circuit thereby identifies particular light sources and provides a control output to the vehicle that is a function of the light source identified. The control output may control the dimmed state of the vehicle's headlamps.

In order to more robustly respond to the different characteristics of headlights and taillights, a different exposure period is provided for the array in order to detect each light source. In particular, the exposure period may be longer for detecting leading taillights and significantly shorter for detecting oncoming headlights.

According to another aspect of the invention, a solid-state light imaging array is provided that is made up of a plurality of sensors arranged in a matrix on at least one semiconductor substrate. The light-imaging array includes at least one spectral separation device, wherein each of the sensors responds to light in a particular spectral region. The control circuit responds to the plurality of sensors in order to determine if spatially adjacent regions of the field of view forward of the vehicle include light of a particular spectral signature above a particular intensity level. In this manner, the control identifies light sources that are either oncoming headlights or leading taillights by identifying such light sources according to their spectral makeup.

According to another aspect of the invention, a solid-state light-imaging array is provided that is made up of a plurality of sensors that divide the scene forward of the vehicle into spatially separated regions, and light sources are identified, at least in part, according to their spatial distribution across the regions. This aspect of the invention is based upon a recognition that headlights of oncoming vehicles and taillights of leading vehicles are of interest to the control, irrespective of separation distance from the controlled vehicle, if the source is on the central axis of travel of the vehicle. Oncoming headlights and leading taillights may also be of interest away from this axis, or off axis, but only if the source has a higher intensity level and is spatially larger. These characteristics of headlights and taillights of interest may be taken into consideration by increasing the resolution of the imaging array along this central axis or by increasing the detection threshold off axis, or both. Such spatial evaluation may be implemented by selecting characteristics of an optical device provided with the imaging sensor, such as providing increased magnification central of the forward scene, or providing a wide horizontal view and narrow vertical view, or the like, or by arrangement of the sensing circuitry, or a combination of these.

The present invention provides a vehicle headlight control which is exceptionally discriminating in identifying oncoming headlights and leading taillights in a commercially viable system which ignores other sources of light including streetlights and reflections of the controlled vehicle's headlights off signs, road markers, and the like. The present invention further provides a sensor having the ability to preselect data from the scene forward of the vehicle in order to reduce the input data set to optimize subsequent data

processing. The invention is especially adapted for use with, but not limited to, photoarray imaging sensors, such as CMOS and CCD arrays.

These and other objects, advantages, and features of this invention will become apparent upon review of the following specification in conjunction with the drawings.

BRIEF DESCRIPTION OF THE DRAWINGS

FIG. **1** is a side elevation of a portion of a vehicle embodying the invention;

FIG. **2** is a partial side elevation view and block diagram of a vehicle headlight dimming control system according to the invention;

FIG. **3** is a block diagram of the control system in FIG. **2**;

FIG. **4** is a layout of a light-sensing array useful with the invention;

FIG. **5** is a block diagram of an imaging sensor;

FIG. **6** is an alternative embodiment of an imaging sensor;

FIGS. **7***a*–**7***d* are a flowchart of a control program;

FIGS. **8***a*–**8***c* are spectral charts illustrating spectra regions useful with the invention;

FIG. **9** is the same view as FIG. **3** of another alternative embodiment;

FIG. **10** is the same view as FIG. **2** of an alternative mounting arrangement;

FIGS. **11***a*–**11***c* are views forward of a vehicle illustrating different forms of spatial filtering; and

FIGS. **12***a* and **12***b* are illustrations of use of the invention to detect particular atmospheric conditions.

DESCRIPTION OF THE PREFERRED EMBODIMENT

Referring now specifically to the drawings and the illustrative embodiments depicted therein, a vehicle **10** includes a vehicle headlight dimming control **12** made up of an imaging sensor module **14** which senses light from a scene forward of vehicle **10**, an imaging control circuit **13** which receives data from sensor **14**, and a vehicle lighting control logic module **16** which exchanges data with control circuit **13** and controls headlamps **18** for the purpose of modifying the headlight beam (FIGS. **1** and **2**). Such control may be a binary control of the aim of the beam, such as by switching between lamps or lamp filaments, or may be a continuous variation of the aim of a single lamp more or less forward of the vehicle. The control may also control the intensity or pattern of the beam. Additionally, the lights of a vehicle equipped with daytime running lights may be switched between a daytime running light condition and a low-beam condition. Vehicle headlight dimming control **12** can perform a wide range of additional control operations on the vehicle, including turning the headlights ON and OFF, modifying the light intensity of the instrument panel, and providing an input to an electro-optic mirror system.

Vehicle lighting control logic module **16** receives an input **20** from imaging control circuit **13**. In particular embodiments, such as ones which adjust the state of the headlights between continuously variable states, module **16** may supply data to imaging control circuit **13**, such as the speed of the vehicle, which may be combined with the data sensed by imaging sensor **14** in establishing the state of headlights **18**. In the illustrated embodiment, imaging sensor module **14** may be fixedly mounted in a housing **28** by a bracket **34** mounted to, or near, the vehicle's windshield **32**. Bracket **34** also mounts an interior rearview mirror **30**. This is a preferred mounting for imaging sensor module **14** because the location within the interior of the vehicle substantially eliminates environmental dirt and moisture from fouling the light sensor module. Additionally, the position behind windshield **32**, which typically is kept relatively clear through the use of washers and wipers and the like, ensures a relatively clear view of the scene forward of vehicle **10**. Alternatively, imaging sensor module **14** may be mounted within a housing **29** of interior rearview mirror **30** facing forward with respect to vehicle **10** (FIG. **10**). In such embodiment, control circuit **13** may be combined with the circuit which controls the partial reflectance level of mirror **30** if mirror **30** is an electro-optic mirror such as an electrochromic mirror. Other mounting techniques for sensor module **14** will be apparent to the skilled artisan.

Imaging sensor module **14** includes an optical device **36**, such as a lens, an array **38** of photon-accumulating light sensors, and a spectral separation device for separating light from the scene forward of vehicle **10** into a plurality of spectral bands, such as a filter array **40** disposed between optical device **36** and light-sensing array **38**. Light-sensing array **38** is described in detail in U.S. Pat. No. 5,550,677 issued to Kenneth Schofield and Mark Larson for an AUTOMATIC REARVIEW MIRROR SYSTEM USING A PHOTOSENSOR ARRAY, the disclosure of which is hereby incorporated herein by reference. Light-sensing array **36** includes a plurality of photosensor elements **42** arranged in a matrix of columns and rows (FIG. **4**). In the illustrated embodiment, an array of **512** rows and **512** columns of light-sensing pixels, each made up of a photosensor element **42** is utilized. However, a greater or lesser number of photosensor elements may be utilized and may be arranged in matrix that is laid out in other than columns and rows. Each photosensor element **42** is connected to a common word-line **44**. To access the photosensor array, a vertical shift register **46** generates word-line signals to each word-line **44** to enable each row of photosensor elements **42**. Each column of photosensor elements is also connected to a bit-line **48** which is connected to an amplifier **50**. As each word-line **44** is accessed, a horizontal shift register **52** uses a line **54** to output the bit-line signals on consecutive bit lines **48** to an output line **56**. In this manner, each photosensor element **42** may be individually accessed by appropriate manipulation of shift registers **46** and **52**. Output **56** is supplied to a digital signal processor **13** which is supplied on an output **62** as input to control circuit **13** (FIGS. **3**–**5**).

Digital signal processor **13** includes an analog-to-digital converter **58** which receives the output **56** of array **36** and converts the analog pixel values to digital values. A digital output **68** of A/D converter **58** is supplied to a taillight detection circuit **76**, a headlight detection circuit **78**, and to ambient sense logic circuit **84**. A detection control circuit **72** supplies control and timing signals on a line **74** which is supplied to array **38**, A/D converter **58** taillight detection circuit **76**, headlight detection circuit **78**, and ambient sense logic **84**. Such signals coordinate the activities of these modules and provide any data, from look-up tables provided in control circuit **72**, needed by each circuit to perform its function. For example, control circuit **72** may provide intensity threshold levels to taillight detection circuit **76** and headlight detection circuit **78**.

Taillight detection circuit **76** detects a red light source having an intensity above a particular threshold as follows. For each pixel that is "red," a comparison is made with adjacent "green" pixels and "blue" pixels. If the intensity of a red pixel is more than a particular number of times the intensity of the adjacent green pixel and adjacent blue pixel,

then it is determined that the light source is red. If the intensity of the "red" light source is greater than a particular threshold, an indication is provided at **80**.

Headlight detection circuit **78** detects a white light source having an intensity above a particular threshold as follows. A white light is a combination of red, green, and blue components. If adjacent "red," "green," and "blue" pixels all exceed a particular threshold, a ratio comparison is made of the pixels. If the ratio of the intensity of the adjacent "red," "green," and "blue pixels is within a particular range, such as 20 percent by way of example, then a white light source is detected.

Vehicle headlight dimming control **12** additionally includes an ambient light-sensing circuit **84** which receives an input from digital output signal **68**. Ambient detection circuit **84** samples a subset of photosensor elements and detects light levels sensed by the subset over a long period of time in order to produce significant time filtration. Preferably, the photosensor elements in the sensed subset include sensors that detect portions of the forward-looking scene that are just above the earth's horizon which is more indicative of the ambient light condition. Ambient detection circuit **84** produces an indication **88** of ambient light levels which is supplied as an input to a lighting control module **90**. A high ambient light level may be used by a module **90** to inhibit headlight actuation or to switch headlights **18** to a daytime running light mode. Ambient detection circuit **84** can, optionally, perform other functions, such as switching the daytime running lights of the vehicle between daytime and nighttime modes, controlling the intensity of the vehicle's instrument panel and providing an input to an electro-optic rearview mirror system.

Indications **80** and **82** from the light detection units and indication **88** from ambient detection circuit **84** are supplied to a lighting control circuit **90** which produces a first indication **92** that headlights **18** are to be switched on, or switched from a daytime running condition to a night mode, and a high-beam enable indication **94** that the headlights may be switched to a high-beam state. Vehicle lighting control logic module **16** responds to indications **92** and **94** by switching headlights **18** to an appropriate mode. An output **96** from module **16** may be provided to supply lighting control circuit **90** with information with respect to vehicle telemetry, steering, speed, and any other parameter that may be incorporated into the algorithm to determine the state of the headlights of the vehicle. Digital signal processor **13** may be implemented using discrete digital circuit modules or with a suitably programmed micro-processor with input and output buffers.

In one embodiment, an imaging sensor module **14*a*** includes a single photosensor array **38*a***, one spectral filter array **40*a***, and one optical device **36*a*** (FIG. **5**). In this illustrated embodiment, spectral filter array **40*a*** includes alternating spectrum filter elements for exposing adjacent pixels to different regions of the electromagnetic spectrum in the red band or green band or blue band. This may be accomplished by arranging such filter elements in stripes or by alternating filter spectral regions in a manner known in the art. Digital signal processor **13*a*** captures a frame of data by enabling photosensor array **38*a*** for a particular exposure period during which each photosensor element **42** accumulates photons. In order to detect oncoming headlights, digital signal processor **13*a*** enables photosensor array **38*a*** for a first exposure period. In order to detect leading taillights, digital signal processor **13*a*** enables photosensor array **38*a*** for a second exposure period. Because oncoming headlights have an intensity level that is substantially greater than that of leading taillights, the exposure period of the frame in which leading taillights is detected is at least approximately ten times the length of the exposure period during which oncoming headlights are detected. Most preferably, the exposure period for detecting leading taillights is approximately 40 times the exposure period for detecting oncoming headlights. In the illustrated embodiment, an exposure period of 0.004 seconds is utilized for detecting taillamps and 0.0001 seconds for detecting oncoming headlamps. The exposure period is the time during which each photosensor element **42** integrates photons before being read and reset by digital signal processor **13*a***. Establishing a different exposure period for detecting headlights verses taillights facilitates the use of existing and anticipated sensor technology by accommodating the dynamic range of such sensor technology. Exposure may also be adaptively established on a priority basis. In one such embodiment, exposure is set to a shorter headlight setting. If headlights are detected, the headlights **18** of vehicle **10** are dimmed and the exposure period is kept short. If no headlights are detected, the next frame is set to a longer exposure period. This has the advantage of shorter system cycle time as well as a reduction in sensitivity to sensor saturation and blooming. In another such embodiment, the exposure period is initially set to a long period. If an oncoming headlight is tentatively detected, the exposure period could then be switched to a short period to confirm the observation.

Vehicle headlight dimming control **12** carries out a control routine **100** (FIGS. *7a–7d*). At the beginning of each pass through the routine, which occurs for every frame captured by the imaging sensor, a frame is grabbed at **102** and all of the pixels in the frame are processed as follows. Counters used for detecting white headlight sources and red taillight sources are zeroed at **104**. It is then determined at **106** whether the previously processed frame was for detecting headlights or taillights. This is determined by looking at a variable "process.tails" which will be set to "yes" if the previous frame was processed to detect headlights and will be set to "no" if the previous frame was processed to detect taillights. If it is determined at **106** that the variable "process.tails" is set to "yes," the control proceeds to **108** in order to process the next frame to detect taillights. If it is determined at **106** that the variable process.tails is set to "no," then control passes to **109** in order to process the next frame as a headlight detecting frame.

The taillight detecting frame process begins at **108** by setting the exposure period for the imaging sensor module to grab the next frame according to a headlamp exposure level. In the illustrated embodiment, the exposure period for detecting headlights is set at 0.0001 seconds. Processing of the taillight frame proceeds at **110** by examining, for each "red" pixel, whether the intensity of light sensed by that pixel is greater than a threshold and whether the intensity of light sensed by that pixel is greater than a selected number of multiples of the intensity of light sensed by an adjacent "blue" pixel and a selected number of multiples of the intensity of light sensed by an adjacent "green" pixel. If so, then a "red" counter is incremented at **114**. Preferably, the ratio of red pixel intensity to green or blue pixel intensity is selected as a power of 2 (2, 4, 8, 16 . . .) in order to ease digital processing. However, other ratios may be used and different ratios can be used between red/green and red/blue pixels. In the illustrated embodiment, a ratio of 4 is selected based upon ratios established from CIE illuminant charts known to skilled artisans. Based upon these charts, a ratio greater than 4 would provide greater discrimination. Such greater discrimination may not be desirable because it could

result in failure to identify a leading taillight and, thereby, a failure to dim the headlights of the controlled vehicle. After all pixels have been processed, the parameter "process.tails" is set to "no " at **116** and control proceeds to **118** (FIG. 7*c*).

In a similar fashion, processing of a headlight frame begins at **109** by setting the exposure period for the imaging sensor module to grab the next frame as a red taillight detecting frame. This is accomplished by setting the exposure period of the imaging sensor module to 0.004 seconds. It is then determined at **120** for each pixel whether an adjacent set of "red," "green," and "blue" pixels each exceeds a particular threshold and whether the pixel intensity levels all fall within a particular range, such as within 20 percent of each other. If all of the red, green, and blue pixels exceed a threshold and pass the ratio test, then it is determined that a white light source is being sensed and a "white" counter is incremented at **122**. After all of the pixels in the frame have been processed, the process.tails flag is set to a "yes" state at **124**. Control then passes to **118**.

It is determined at **118** whether both the "white" and the "red" counters are below respective high-beam thresholds. If so, a high-beam frame counter is incremented and a low-beam frame counter is set to zero at **120**. If it is determined at **118** that both the "white" and the "red" counters are not less than a threshold, it is then determined at **126** whether either the "red" counter or the "white" counter is greater than a respective low-beam threshold. If so, the high-beam frame counter is set to zero and the low-beam frame counter is incremented at **128**. If it is determined at **126** that neither the "red" counter or the "white" counter is greater than the respective low-beam threshold, then both the high-beam frame counters and the low-beam frame counters are set to zero at **130**.

Control then passes to **132** where it is determined if the low-beam frame counter is greater than a particular threshold. If so, high-beam enable signal **94** is set to a "low-beam" state at **134**. Additionally, the low-beam frame counter is set to the threshold level. If it is determined at **132** that the low-beam frame counter is not greater than its threshold, it is determined at **136** whether the high-beam frame counter is greater than its threshold. If so, high-beam enable signal **94** is set to "high-beam" state at **138** and the high-beam frame counter is reset to its threshold level.

Control routine **100** provides hysteresis by requiring that a headlight spectral signature or a taillight spectral signature be detected for a number of frames prior to switching the headlights to a low-beam state. Likewise, the absence of a detection of an oncoming headlight or a leading taillight must be made for multiple frames in order to switch from a low-beam to a high-beam state. This hysteresis guards against erroneous detection due to noise in a given frame and eliminates headlamp toggling when sources are at the fringe of detection range. In the illustrated embodiment, it is expected that a vehicle headlight control system **12** will respond to a change in the state of light sources in the forward field of view of the vehicle in less than 0.5 seconds. An additional level of hysteresis may be provided by forcing the headlamps to stay in a low-beam state for a given number of seconds after a transition from high beams to low beams. The reverse would not occur; namely, holding a high-beam state for a particular period to avoid annoyance to drivers of oncoming or leading vehicles.

In the illustrated embodiment, red light sources, which have the spectral signature and intensity of taillights, are detected by determining that a "red" pixel, namely a pixel which is exposed to light in the visible red band, is both greater than a given multiple of the "green" and "blue" adjacent pixels, as well as being greater than a threshold and that white light sources, which are the spectral signatures of headlights, are detected by determining that "red," "green," and "blue" pixels are both within a particular intensity range of each other as well as being greater than a threshold. This double-testing helps to reduce false detection of light sources. However, it would be possible to detect red light sources only by looking at the intensity of "red" pixels and to detect white light sources by determining that an adjacent set of "red," "blue," and "green" pixels are all above a particular threshold.

In the illustrated embodiment, spectral filtering is carried out in a manner which exposes each photosensing element in the photosensor array to a band of light falling within one of the primary ranges of the visible spectrum, namely red, green, or blue as illustrated in FIG. **8***a*. However, different bands in the frequency spectrum may be utilized including not only visible spectrum bands but invisible spectrum bands including infrared and ultraviolet bands as illustrated in FIG. **8***b*. The band selection could also be chosen from visible spectral regions that do not correspond with the primary spectrums. For example, the spectral filter may be selected in order to detect at the pixel level red light sources and the compliment of red light sources as illustrated in FIG. **8***c*. These binary indications could be utilized to detect red taillights by determining that the "red" pixel is greater than a threshold and greater than a number of multiples of the intensity sensed by the "red compliment" pixel adjacent thereto. Likewise, a white light source indicative of oncoming headlights could be detected by determining that both the "red" pixel and the "red compliment" pixel adjacent thereto are both above a particular threshold and within a particular intensity range of each other. It may also be desirable to select bands that fall between primary spectrum regions or any other bands that may be desirable for a particular application.

Photosensing array **38** may be a charge couple device (CCD) array of the type commonly utilized in video camcorders and the like. Alternatively, photosensing array **38** could be a CMOS array of the type manufactured by VLSI Vision Ltd. (VVL) in Edinburgh, Scotland. Additionally, a hybrid of the CCD and CMOS technology may be employed. Other potentially useful photosensing technologies include CID, MOS, photo diodes, and the like.

In an alternative embodiment, an imaging sensor module **14***b* includes two or more pairs of photosensor arrays **38***b* (FIG. **6**). Each photosensor array **38***b* has an associated spectral filter array **40***b* and optical device **36***b*. In this embodiment, each array **38***b* is operated by digital signal processor **58***b* to have an exposure period that is set for detecting either oncoming headlights or leading taillights. In this manner, each frame of the scene captured by each array is utilized to detect a particular light source. This is in contrast to light-sensing module **14***a* in FIG. **5** in which each light source is detected in alternating frames. Each spectral filter **40***b* is identical, whereby each array **38***b* is capable of detecting light sources having spectrum composition including red, green, and blue regions of the spectrum. However, the spectral filters may be custom configured to the particular application. This may result in a homogeneous composition or a more complex mosaic, especially where light sources are examined in three or more spectral regions.

In yet an additional single lens system embodiment, an imaging sensor module **14***c* includes three light-sensing arrays (not shown) and a spectral separation device overlying the light-sensing arrays which directs spectral bands to

different arrays (FIG. 9). An example of such spectral separation device is a refracting optical splitter, such as dichroic mirrors or prisms. In this manner, each light-sensing array detects light in either the red or green or blue region of the spectrum. As such, imaging sensor module **14***c* produces three output signals on a line **64**, each representing detected light in one of the red or green or blue spectral regions. The output signals on line **64** include frame-timing signals which are decoded by digital acquisition circuits **66** which produces a digital output signal **68'** indicative of intensity levels of adjacent red, green, and blue pixels. Digital acquisition circuit **66** additionally produces a timing signal output **70** which is utilized by a detection control circuit **72** in order to supply synchronizing signals, at **74**, to imaging sensor module **14***c* and digital acquisition circuit **66**. A control and timing signal **86** is produced by digital acquisition circuit **66** and supplied to detection circuits **76** and **78** and ambient detection circuit **84** in order to enable the circuits to distinguish between subsequent frames captured by the light-sensing modules. As with previously described embodiments, digital output signal **68'** is supplied to taillight detection circuit **76**, headlight detection circuit **78**, and ambient sense logic circuit **84**.

The present invention is capable of identifying point sources of light in any particular location within the scene viewed forward of the vehicle. Additional discrimination between oncoming headlights and leading taillights may be accomplished by taking into account the relative location of the source of light within the scene. For example, as best seen by reference to FIG. **11***a*, particular relationships have been discovered to exist between light sources of interest and their spatial location forward of the vehicle. Oncoming headlights and leading taillights of interest can be characterized, at least in part, based upon their displacement from the central axis of the vehicle. On-axis light sources of interest can be at both close and far away separation distances. However, off-axis light sources may only be of interest if at a close separation distance from the vehicle. Assuming for illustration purposes that headlights and taillights are of the same size, headlights and taillights of interest occupy an increasing spatial area as they move off axis. Therefore, the resolution required to detect lights of interest may decrease off axis. Additionally, the fact that close-up off-axis light sources have significant spatial area would allow image-processing techniques to be employed to discriminate between close-up off-axis light sources of interest and distant off-axis light sources, which are not of interest. This may be accomplished through customized optics or other known variations in pixel resolution. Furthermore, headlights and taillights of interest are of greater intensity, because of their closeness, off axis. This allows an increase in intensity detection thresholds off axis without missing detection of such light sources. This increase in detection threshold and reduction in resolution off axis assists in avoiding false detection of light sources not of interest, such as a streetlights, building lights, and the like.

In order to take into account this spatial differentiation, the present invention comprehends detecting light sources at a lower threshold centrally of the scene and at a higher threshold at the periphery of the scene. This may be accomplished either optically, or electronically, or both. Optically, this may be accomplished by providing a non-uniform magnification to optical device **36**. For example, an optical device may have optical magnification at a central portion thereof and an optical attenuation at a peripheral region thereof. Additionally, optical device **36** may have a relatively wide horizontal field of view and a relatively narrow vertical field of view. The narrow vertical field of view would tend to reduce the detection of street lights and other overhead light sources. In a preferred embodiment, optical device **36** is a lens that is made from injection-molded plastic. Electronically, such spatial differentiation may be accomplished by establishing a higher threshold level for pixel intensity detection for pixels located at the periphery of the scene than for pixels located centrally of the scene. This would cause centrally positioned light sources to be detected at a lower intensity level than sources detected at the periphery of the scene. Such spatial differentiation could also be accomplished by a non-symmetrical mapping of light to the sensor array, as illustrated in FIG. **11***b*, or by masking portions **98***a*, **98***b*, and **98***c*, at the periphery of the scene, as illustrated in FIG. **11***c*, so that these portions are not sensed at all. Spatial differentiation could also be accomplished by providing non-uniform pixel size.

The present invention is exceptionally sensitive to sources of light having spectral signatures of oncoming headlights and leading taillights. By recognizing the spectral signature of the light sources, many non-relevant light sources may be ignored. By examining light sources pixel-by-pixel, relatively small light sources may be detected at great distances in order to dim the headlights well before they become a nuisance to the driver of the vehicle ahead of the control vehicle. This is accomplished, according to a preferred embodiment, by utilizing an imaging sensor made up of an array of photosensing elements in a compact design which responds to light sources in a scene forward of the vehicle. Furthermore, such sensor preferably utilizes digital processing techniques which are well adapted for use with custom digital electronic circuity, avoiding the expense and speed constraints of general purpose programmable microprocessors.

The present invention takes advantage of the spectral signatures both of light sources which must be detected in a headlight dimming control as well as the spectral signatures of light sources which must be rejected in a headlight dimming control. For example, federal regulations establish specific spectral bands that must be utilized in vehicle taillights; namely red. Furthermore, federal legislation prohibits the use of red light sources in the vicinity of a highway. Lane markers, signs, and other sources of reflected light are all specified in a manner which may be readily identified by spectral signature. Oncoming headlights, according to known technology, have a visible spectral signature which is predominantly white light. As light source technology evolves, the present invention facilitates detection of other spectral signatures of light sources in the future.

The present invention is capable of utilizing spatial filtering to even further enhance the ability to identify light sources. By spatial filtering is meant consideration of not only whether a particular pixel, or pixel group, is detecting a light source having a particular spectral signature, but also what adjacent, or closely related, pixels or pixel groups, are detecting. For example, it can be concluded that very closely adjacent red and white light sources are not of interest as oncoming headlights or taillights. An example where such pattern could be observed is a streetlight observed with a system having imperfect color correction, which can produce a white light surrounded by a red halo. By evaluation of adjacent pixel groups, a closely proximate red light source and white light source can be identified as a streetlight and not either a headlight or a taillight.

Pattern recognition may be used to further assist in the detection of headlights, taillights, and other objects of inter-

est. Pattern recognition identifies objects of interest based upon their shape, reflectivity, luminance, and spectral characteristics. For example, the fact that headlights and taillights usually occur in pairs could be used to assist in qualifying or disqualifying objects as headlights and taillights. By looking for a triad pattern, including the center high-mounted stoplight required on the rear of vehicles, stoplight recognition can be enhanced. Furthermore, object recognition can be enhanced by comparing identified objects over successive frames. This temporal processing can yield information on object motion and can be used to assist in qualifying or disqualifying objects of interest.

Spatial filtering can also be useful in identifying atmospheric conditions by detecting effects on light sources caused by particular types of atmospheric conditions. One such atmospheric condition is fog. A bright light source **102** is surrounded by a transition region **104** between the intensity of the light source and the black background (FIG. **12***a*). Fog, or fine rain, tends to produce a dispersion effect around light sources which causes a series of transition regions **104***a*, **104***b* . . . **104***n* which extend further from the light source (FIG. **12***b*). By placing appropriate limits on the size of the transition region, fog or light rain, or a mixture of both, or other related atmospheric conditions, can be detected. In response to such atmospheric conditions, vehicle headlight dimming control **12** may activate fog lights, inhibit switching to high beams, or perform other control functions. Furthermore, fog, or fine rain, can be detected, or confirmed, by analyzing the effects of headlights **18** in the forward scene as reflected off of moisture particles.

Spatial filtering can also be used to detect rain on windshield **32**. This may be accomplished by performing statistical analyses between a pixel, or pixel group, and adjacent pixels or pixel groups. A view forward of a vehicle through a dry windshield would be sensed by an imaging sensor module as continuously varying differences between adjacent pixels, or pixel groups, assumed to be under constant illumination from light sources. When, however, a droplet of water or a snowflake is on windshield **32**, an effect is created which causes a lack of continuous variation of differences between adjacent pixels, or pixel groups. This has the tendency to reduce the first derivative of the pixel, a condition which can be determined by processing.

Processing can be used to determine the first derivative of an image captured by image-sensing module **14** by determining a measure of the entropy, or disarray, of a pixel, or pixel group, with respect to its neighbors. For example, an approximation of the first derivative for a pixel is:

$$\frac{d(P_i)}{dxy} = \frac{\sqrt{\sum_{j=1}^{n} (Pi - Pj)^2}}{N}$$

where N=8 and

where Pi is a given pixel and Pj is one of 8 neighboring pixels.

It should be apparent to those skilled in the art that the invention is capable of performing control functions other than controlling the dimming of the vehicle's headlights. For example, spectral signature identifications may be utilized to detect the state of a traffic light to either warn the driver that a light has changed from green to yellow to red or to automatically decelerate and stop the vehicle. Also, by sensing that the intensity of a leading taillight has abruptly increased, a condition where the leading vehicle is braking may be identified and suitable action taken.

The invention may be utilized to identify particular traffic signs by their spectral signature as well as their geometric organization. For example, red octagons may be identified as stop signs, yellow triangles as caution signs, and the like. These capabilities are a result of the present invention providing a significant reduction in the amount of data to be processed because the image forward of the vehicle is captured in a manner which preselects data. Preselection of data is accomplished by configuring the sensor array, including the optics thereof, to consider the spatial, as well as the spectral, characteristics of light sources.

The present invention may be used to determine the environment in which the vehicle is operated. For example, a high level of "non-qualified" light sources; namely, light sources that are not headlights or taillights, as well as "qualified" light sources can be used to determine a measurement of the activity level around the vehicle; namely, that the vehicle is in an urban environment which may be a useful input for particular control algorithms. This may be accomplished as follows. An activity counter is established which represents a total number of pixels, or pixel groups, whose red, green, or blue components exceed a threshold. The threshold is set to a relatively low value, namely just above the noise floor. This counter, which registers any real detected source, is reset and retabulated every frame, preferably during the exposure period for detecting taillights. If the activity counter exceeds a particular value, then a high activity environment is detected. One use of this information would be to inhibit the control from switching the vehicle's headlights from a low-beam state to a high-beam state unless a low activity condition exists for awhile. The activity counter may be used by the control in combination with a low-beam duration counter which records the number of frames that the system has been in a low-beam state. It is reset upon system power-up and at every transition from the high-to-low beam states. The control may be inhibited from switching the vehicle's headlights to the high-beam state unless either the low-beam duration counter exceeds a value or the activity counter indicates a sustained low activity condition.

The present invention can be used to detect lane markers in order to either assist in steering the vehicle or provide a warning to the driver that a lane change is occurring. The capability of the invention to detect rain on the vehicle's windshield could be used to control the vehicle's wipers both between OFF and ON conditions and to establish a frequency of intermittent operation.

Changes and modifications in the specifically described embodiments can be carried out without departing from the principles of the invention which is intended to be limited only by the scope of the appended claims, as interpreted according to the principles of patent law including the doctrine of equivalents.

The embodiments of the invention in which an exclusive property or privilege is claimed are defined as follows:

1. A vehicle headlamp control, comprising:

an imaging sensor that senses light in spatially separated regions of a field of view forward of a vehicle; and

a control circuit that is responsive to said imaging sensor in order to determine if individual regions of the field of view include light levels having a particular intensity level in order to identify light sources of interest and provide a control output to said vehicle that is a function of the identification of light sources of interest including sensing oncoming vehicle headlights using a particular sensitivity and sensing leading vehicle taillights using a sensitivity higher than said particular sensitivity.

2. The vehicle headlamp control in claim 1 including an exposure control which determines an accumulation period of time said imaging sensor senses light in order to determine a value of sensitivity.

3. The vehicle headlamp control in claim 2 wherein said exposure control defines at least two accumulation periods, one of said accumulation periods being a relatively short accumulation period for detecting oncoming vehicle headlights and another of said accumulation periods being a relatively long accumulation period for detecting leading vehicle taillights.

4. The vehicle headlamp control in claim 1 wherein said control circuit includes a digital processor which provides a digital value of the sensed light level of each region.

5. The vehicle headlamp control in claim 1 wherein said imaging sensor includes a photosensor array.

6. The vehicle headlamp control in claim 5 wherein said imaging sensor includes a spectral separation device for dividing said photosensors into sensors which are each responsive to a particular spectral region.

7. The vehicle headlamp control in claim 6 wherein said spectral separation device divides said photosensors into red, green, and blue sensors which sense light in either a red, a green, or a blue portion of the spectrum.

8. The vehicle headlamp control in claim 6 wherein said spectral separation device divides said photosensors into red and red compliment sensors which sense light in either a red portion of the spectrum or a portion of the spectrum that is outside said red portion of the spectrum.

9. The vehicle headlamp control in claim 1 wherein said imaging sensor includes an optical device.

10. The vehicle headlight control in claim 9 wherein said optical device produces a higher resolution along an axis of vehicle travel than a resolution off of said axis.

11. The vehicle headlamp control in claim 1 wherein said control circuit switches the vehicle headlights between high-beam and low-beam states.

12. The vehicle headlamp control in claim 1 wherein said control circuit controls the vehicle headlights along a continuously variable value.

13. A vehicle headlight control, comprising:

a solid-state light sensor array made up of a plurality of sensors arranged in a matrix on at least one semiconductor substrate and a spectral separation device to apply particular spectral regions to particular ones of said sensors, wherein each of said sensors responds to light in a particular spectral region;

an optical device for directing light onto said sensor array in a manner which preserves spatial separation of light sources forward of the vehicle; and

a control circuit that is responsive to said plurality of sensors in order to determine if spatially adjacent one or ones of said sensors are sensing light of a particular spectral signature above a particular intensity level in order to identify light sources that are either oncoming headlights or leading taillights to thereby control the vehicle headlights wherein first particular ones of said sensors respond to light in a first spectral region and second particular ones of said sensors respond to light in a second spectral region different from said first spectral region and wherein said control circuit identifies light sources by comparing light levels sensed by said first sensors with light levels sensed by said second sensors.

14. The vehicle headlamp control in claim 13 wherein said control circuit selects a first light exposure period for at least a portion of said array in order to detect oncoming headlights and a second light exposure period for at least a portion of said array in order to detect leading taillights.

15. The vehicle headlamp control in claim 14 wherein the same portion of said array senses oncoming headlights and leading taillights and said first and second light exposure periods are sequentially varied.

16. The vehicle headlamp control in claim 14 wherein different portions of said array sense oncoming headlights and leading taillights and each of said portions has one of said light exposure periods.

17. The vehicle headlamp control in claim 14 wherein the length of said second light exposure is at least ten times the length of said first light exposure.

18. The vehicle headlamp control in claim 17 wherein the length of said second light exposure is at least approximately 40 times the length of said first light exposure.

19. The vehicle headlamp control in claim 13 wherein said optical device produces a higher resolution along an axis of vehicle travel than a resolution off of said axis.

20. The vehicle headlamp control in claim 19 wherein said optical device has a magnification that is greater centrally of its field of view than at the periphery of its field of view.

21. The vehicle headlamp control in claim 13 including an ambient light detector which enables said control circuit during low ambient light conditions.

22. The vehicle headlamp control in claim 21 wherein said ambient light detector includes a portion of said sensors that are time-filtered in order to sense long duration changes in sensed light levels.

23. The vehicle headlamp control in claim 22 wherein said portion of said sensors are positioned on said array to receive light from sources close to the earth's horizon.

24. The vehicle headlight control in claim 13 wherein particular ones of said sensors respond to red light in generally a red spectral region and particular ones of said sensors respond to non-red light in a spectral region other than said red spectral region.

25. The vehicle headlight control in claim 24 wherein said control circuit detects leading taillights by determining that at least one of said red light responsive sensors is sensing a light level that is greater than a particular multiple of light sensed by at least one adjacent non-red light responsive sensor and that light level is greater than a particular threshold.

26. The vehicle headlight control in claim 24 wherein said control circuit detects oncoming headlights by determining that at least one of said red light responsive sensors and at least one adjacent non-red light responsive sensors are both sensing light levels within a particular ratio of each other and greater than a particular threshold.

27. The vehicle headlight control in claim 13 wherein said control circuit determines if a particular light source has a particular spectral signature by comparing levels of light sensed by sensors which respond to light in a particular spectral region with levels of light sensed by sensors which respond to light in a different spectral region.

28. The vehicle headlight control in claim 13 wherein said control circuit determines if a particular light source has a particular spectral signature by comparing levels of light sensed by sensors which respond to light in a particular spectral region with a threshold.

29. The vehicle headlight control in claim 28 wherein said threshold is a function of the spatial location of the particular sensor in the array.

30. The vehicle headlight control in claim 29 wherein said threshold is higher for sensors sensing light off a central

forward axis of the vehicle than for sensors sensing light along said axis.

31. The vehicle headlight control in claim **28** wherein said control circuit determines if a particular light source has a particular spectral signature by comparing levels of light sensed by sensors which respond to light in a particular spectral region with levels of light sensed by sensors which respond to light in a different spectral region.

32. The vehicle headlight control in claim **13** wherein said solid-state light sensor and said optical device are positioned in a housing behind the vehicle's windshield.

33. The vehicle headlight control in claim **32** wherein said housing is behind a portion of the vehicle's windshield swept by wipers.

34. The vehicle headlight control in claim **33** wherein said housing is mounted to a bracket supporting a rearview mirror.

35. The vehicle headlight control in claim **32** wherein said housing is an interior mirror housing.

36. A method of detecting light sources of interest forward of a vehicle in order to control the headlights of that vehicle, including:

providing a solid-state photosensor array made up of a plurality of uniform sensors arranged in a matrix and mapping particular spatially arranged portions of a field of view forward of the vehicle onto said array in a manner which generally preserves the spatial arrangement of the field of view wherein said mapping is a non-linear mapping;

restricting light received by each sensor to a particular spectral region so that each sensor responds to light having a particular spectral range; and

evaluating light levels sensed by each sensor in order to establish a spectral signature of light sources in said field of view in order to identify light sources of interest in said field of view.

37. The method in claim **36** wherein said comparing includes exposing at least a portion of said sensors for a first exposure period in order to identify spectral signatures of headlights and exposing at least a portion of said sensors for a second exposure period in order to identify spectra signatures of taillights.

38. The method in claim **36** further including reading individual light intensity levels of each of said sensors.

39. The method in claim **38** including digital processing of said individual light intensity levels.

40. The method in claim **39** including digital processing using custom digital circuitry.

41. The method in claim **36** wherein said non-linear mapping of the field of view forward of the vehicle onto said array causes light sources positioned centrally in said field of view to be detected at a lower intensity than light sources positioned at the periphery of the field of view.

42. The method in claim **36** wherein said mapping includes masking portions of the field of view forward of the vehicle.

43. The method in claim **36** wherein said comparing light levels includes comparing light levels with thresholds, said thresholds being different for particular ones of said sensors.

44. The method in claim **43** wherein said thresholds are greater off a central forward axis of the vehicle than on said axis.

45. A method of detecting light sources of interest forward of a vehicle in order to control the headlights of that vehicle, including:

providing a solid-state photosensor array made up of a plurality of sensors arranged in a matrix and mapping particular spatially arranged portions of a field of view forward of the vehicle onto said array in a manner which generally preserves the spatial arrangement of the field of view;

evaluating light levels detected by each sensor in order to identify light sources of interest at least in part as a function of a spatial distribution of each light source in said field of view wherein said evaluating includes establishing a different sensing resolution along an axis of vehicle travel than off of said axis.

46. The method in claim **45** wherein said different sensing resolution is optically produced.

47. The method in claim **45** wherein the sensing resolution along said axis is greater than off of said axis.

48. The method in claim **45** including providing an optic device which provides a non-uniform magnification of said field of view.

49. The method in claim **45** wherein said solid-state photosensor array has sensor sizes which are non-uniform in said matrix.

50. The method in claim **45** wherein said identifying light sources of interest includes determining if each sensor is sensing a light level above a threshold level.

51. The method in claim **50** wherein said threshold is non-uniform for said sensors.

52. The method in claim **51** wherein said threshold is lower for sensors sensing portions of said field of view along an axis of vehicle travel than for sensors sensing, a portion of said field of view off of said axis.

53. The method in claim **45** including restricting light received by each sensor to a particular spectral region so that each sensor responds to light having a particular spectral range.

* * * * *

UNITED STATES PATENT AND TRADEMARK OFFICE

CERTIFICATE OF CORRECTION

PATENT NO. : 5,796,094
DATED : August 18, 1998
INVENTOR(S) : Kenneth Schofield, Mark L. Larson and Keith J. Vadas

It is certified that error appears in the above-identified patent and that said Letters Patent is hereby corrected as shown below:

Column 16,
Line 44, delete -- , -- after "sensing".

Signed and Sealed this

Eighth Day of January, 2002

Attest:

Attesting Officer

JAMES E. ROGAN
Director of the United States Patent and Trademark Office