PCT

WORLD INTELLECTUAL PROPERTY ORGANIZATION
International Bureau

INTERNATIONAL APPLICATION PUBLISHED UNDER THE PATENT COOPERATION TREATY (PCT)

(51) International Patent Classification 6 : G01S 17/87, 7/481, 5/16, G01B 11/26

A2

(11) International Publication Number: WO 96/17258

(43) International Publication Date: 6 June 1996 (06.06.96)

(21) International Application Number: PCT/GB95/02799

(22) International Filing Date: 30 November 1995 (30.11.95)

(30) Priority Data:

9424277.3	1 December 1994 (01.12.94)	GB
9500943.7	18 January 1995 (18.01.95)	GB

(71) Applicant (*for all designated States except US*): NOVUS LIMITED [GB/GB]; Spratton Lodge, Spratton, Northamptonshire NN6 8LD (GB).

(71)(72) Applicant and Inventor: POPOVICH, Milan, Momcilo [GB/GB]; 53 Westfield Road, Leicester LE3 6HU (GB).

(74) Agent: LEWIS & TAYLOR; 144 New Walk, Leicester LE1 7JA (GB).

(81) Designated States: AL, AM, AT, AU, BB, BG, BR, BY, CA, CH, CN, CZ, DE, DK, EE, ES, FI, GB, GE, HU, IS, JP, KE, KG, KP, KR, KZ, LK, LR, LS, LT, LU, LV, MD, MG, MK, MN, MW, MX, NO, NZ, PL, PT, RO, RU, SD, SE, SG, SI, SK, TJ, TM, TT, UA, UG, US, UZ, VN, European patent (AT, BE, CH, DE, DK, ES, FR, GB, GR, IE, IT, LU, MC, NL, PT, SE), OAPI patent (BF, BJ, CF, CG, CI, CM, GA, GN, ML, MR, NE, SN, TD, TG), ARIPO patent (KE, LS, MW, SD, SZ, UG).

Published

Without international search report and to be republished upon receipt of that report.

(54) Title: OPTICAL POSITION SENSING SYSTEM

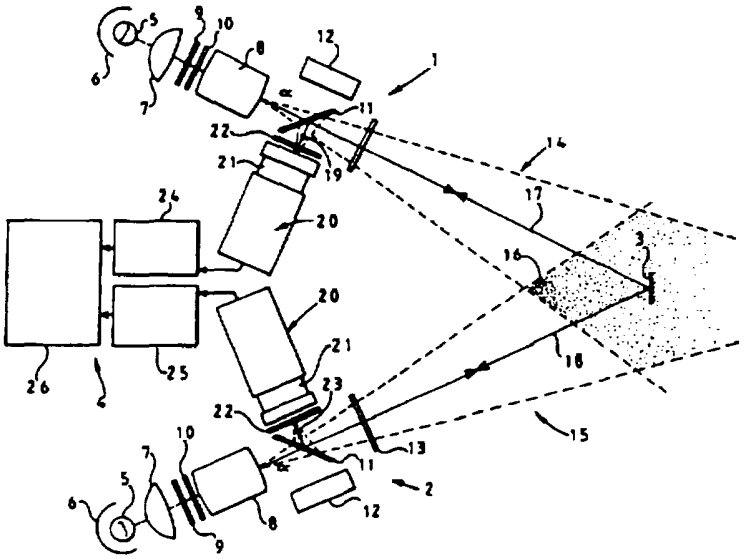

(57) Abstract

An optical triangulation tracking system comprises means for creating at least two beams of light (14, 15), each being divergent, mounted relative to one another in a predetermined spatial and angular relationship such that the beams intersect one another thereby illuminating a volume of space (16), at least one reflector (3) relatively moveable within said volume of space, a light detection device (20) adapted to receive light from each of the two beams which has been reflected back along its path of transmission by the reflector and an image processing system (24, 25) connected to each of said detection devices, the arrangement being such that relative movement between said light beam creation means and the reflector will be monitored by the image processing system which determines from received images by triangulation spatial coordinates of the reflector thereby to determine the relative position within said volume of space of the reflector.

MOBILEYE EXHIBIT 1010

FOR THE PURPOSES OF INFORMATION ONLY

Codes used to identify States party to the PCT on the front pages of pamphlets publishing international applications under the PCT.

AT	Austria	GB	United Kingdom	MR	Mauritania
AU	Australia	GE	Georgia	MW	Malawi
BB	Barbados	GN	Guinea	NE	Niger
BE	Belgium	GR	Greece	NL	Netherlands
BF	Burkina Faso	HU	Hungary	NO	Norway
BG	Bulgaria	IE	Ireland	NZ	New Zealand
BJ	Benin	IT	Italy	PL	Poland
BR	Brazil	JP	Japan	PT	Portugal
BY	Belarus	KE	Kenya	RO	Romania
CA	Canada	KG	Kyrgystan	RU	Russian Federation
CF	Central African Republic	KP	Democratic People's Republic of Korea	SD	Sudan
CG	Congo			SE	Sweden
CH	Switzerland	KR	Republic of Korea	SI	Slovenia
CI	Côte d'Ivoire	KZ	Kazakhstan	SK	Slovakia
CM	Cameroon	LI	Liechtenstein	SN	Senegal
CN	China	LK	Sri Lanka	TD	Chad
CS	Czechoslovakia	LU	Luxembourg	TG	Togo
CZ	Czech Republic	LV	Latvia	TJ	Tajikistan
DE	Germany	MC	Monaco	TT	Trinidad and Tobago
DK	Denmark	MD	Republic of Moldova	UA	Ukraine
ES	Spain	MG	Madagascar	US	United States of America
FI	Finland	ML	Mali	UZ	Uzbekistan
FR	France	MN	Mongolia	VN	Viet Nam
GA	Gabon				

BNSDOCID: <WO__9617258A1_I_>

"OPTICAL POSITION SENSING SYSTEM"

This invention relates to optical position sensing systems generally and more particularly, but not exclusively, to an optical position sensing system operating in the infra-red spectrum to determine the position, or the position and attitude, of a target object in three dimensional space.

A new display concept in the field of interactive television video image software applications uses 'knowledge' of the head position of a viewer disposed in front of a video display screen to provide an enhanced field of view and a pseudo three-dimensional effect, i.e. by two-dimensional screen image perspective, similar to viewing a hologram. This requires some means of automatically determining the position and thereby tracking movement of the head in three dimensional Cartesian co-ordinates at a frequency compatible with the picture update rate of the video display system. Obviously, the head position could be determined in other spatial coordinate systems, such as spherical polar coordinates, for example.

Current techniques for position sensing, which include: laser ranging, sonar, radar, electromagnetic field and structured lighting are not suitable in, for example, home domestic interactive virtual reality games applications for reasons of accuracy, safety, and cost. Hitherto position sensing means have relied on the provision of separate transmitting and receiving means with one such means being fixed at a base station and the other being attached to a moving target object.

It is an object of the invention to provide a simplified position sensing system based on optical triangulation which conveniently may be used in domestic interactive virtual reality games applications or simplified means to determine movement of an illuminated object.

In accordance with the present invention there is provided an optical triangulation tracking system comprising means for creating at least two beams of light, each being divergent, mounted relative to one another in a predetermined spatial and angular relationship such that the beams intersect one another thereby illuminating a volume of space, at least one reflector relatively moveable within said volume of space, a light detection device

adapted to receive light from each of the two beams which has been reflected back along its path of transmission by the reflector and an image processing system connected to each of said detection devices, the arrangement being such that relative movement between said light beam creation means and the reflector will be monitored by the image processing system which determines from received images by triangulation spatial coordinates of the reflector thereby to determine the relative position within said volume of space of the reflector.

In preferred embodiments of the invention the reflector is a retroreflector.

The image processing system may be adapted additionally to monitor angular movements of the reflector. Two light detection means may be provided with each being masked by a corresponding slitted aperture plate with the slits of the aperture plates being relatively mutually perpendicular in orientation.

The detection device may comprise a plurality of light detection means each associated with a respective one of said divergent beams and each adapted to receive light reflected back along its path of transmission by the retro-reflector. In this arrangement the system may further comprise comprise a beam splitting means associated with each light detection means through which passes both a corresponding one of the divergent beams and light reflected by the reflector therefrom, the arrangement providing that the path of reflected light exiting the beam splitting means and the paths of light of the divergent beams entering said beam splitting means are angularly displaced. The divergent beams may pass directly through the corresponding beam splitting means and the path of light reflected by the reflector may be angularly displaced by these beam splitting means.

The light detection means may each comprise a two dimensional detector array,a CCD video camera, a Position Sensing Detector and/or any type of detector which can detect the position of a light spot in two dimensions.

The divergent beams of light may each be paired coincident light beams with a first beam of each said pair having a first wavelength and a uniform angular intensity profile and the second beam of that pair having a

second wavelength and a non-uniform symmetrical intensity profile, and the light detection means or device may be adapted to measure the intensity of light incident thereon and the image processing system may be adapted to determine the trajectory of incident light from the intensities received from said paired uniform and non-uniform light beams. Filter means such as diffusing screens, holographic light shaping diffusers, apodising filters and diffractive optics may be utilised to provide both said uniform and said non-uniform intensity profiles.

The light detection means may be provided by a single detection device optically multiplexed so as to function as a plurality of individual detection means. The light reflected by the reflector may be channelled to the detector by means of a light guide consisting of reflective surfaces.

The system may further comprise a reflecting device having a plurality of spaced apart retro-reflectors the relative positions of which are known by the image processing system, the arrangement enabling both position and orientation of the reflecting device within the illuminated space to be determined. The image processing system may be adapted to identify predetermined types of motion of the or each retro-reflector. The amplitude of the light of each divergent beam may be modulated.

Polarising devices may be used to reject background illumination and the beam splitting means may be a half-silvered mirror. The reflector may be a retroreflector in the form of a high gain screen with a narrow gain profile around the angle of incidence and/or may be in the form of one or more retroreflective prisms.

The divergent light beams may be laser light of one or more narrow spectral band widths of wavelength and/or infrared radiation from a light-emitting diode.

The means for creating light may be adapted to emit sequentially a plurality of light beams each having a different wavelength, a corresponding plurality of retro-reflectors may be provided each being adapted by filter or other means to retro-reflect only light of an associated one of said wavelengths, and the light detection means may be adapted to receive light from the plurality of retro-reflectors and by being multiplexed with the

sequencing of the light emission may be able to discriminate between light reflected from each of the retro-reflectors.

The second support means may comprise a body housing a retro-reflector and a closure or shutter member associated with said body, with the closure or shutter member being operative to mask or un-mask the retro-reflector.

Preferred embodiments of the invention will now be described with reference to the accompanying drawings, in which:-

Figure 1 illustrates diagrammatically the operation of a first embodiment of a head or target tracking system in accordance with the invention;

Figure 2 illustrates diagrammatically the operation of a second embodiment of a head or target tracking system generally similar to that shown in Figure 1 wherein like components or items are denoted by like numerals;

Figure 3 illustrates diagrammatically the operation of a third embodiment generally similar in layout to that shown in Figure 1 wherein similar components or items are denoted by similar numerals;

Figure 3a illustrates the polar intensity profile of one light source used in the embodiment shown in Figure 3;

Figure 3b illustrate the polar intensity profile of another light source used in the embodiment shown in Figure 3;

Figure 4 illustrates a fourth embodiment of the invention comprising optical heads similar in function to those of said first embodiment shown in Figure 1 and like parts or items are denoted by like numerals;

Figure 5 illustrates a reflector pattern for use with a fifth embodiment of the invention;

Figure 6 illustrates diagrammatically a sixth embodiment of the invention wherein like parts or items to those of the embodiments of Figures 1 to 3 are denoted by like numerals;

Figure 7 illustrates a seventh embodiment of the invention wherein like parts or items to those of the embodiments of Figures 1 to 3 are denoted by like numerals;

Figure 8 illustrates an eighth embodiment of the invention similar to said aforedescribed third embodiment shown in Figure 3 wherein like parts are denoted by like numerals;

BNSDOCID: <WO___9617258A1_I_>

Figure 9 illustrates diagrammatically generally in sectional view a number of retroreflector devices for use with the embodiments of the invention, and

Figure 10 illustrates diagrammatically a sensor layout for use with at least one of the described embodiments of the invention.

A first embodiment of the present invention, in the form of a head tracking system shown in Figure 1, is based on the use of optical triangulation to determine the spatial position of a viewer. It comprises two identical optical receiver/transmitter heads 1,2 which would typically be mounted at either side of a video display screen (not shown), a small retroreflector or retroreflective target 3 worn by the viewer and an electronic image processor means 4. The optical heads 1,2 are fixed in space at positions relative to a datum point and one another known to the processor means 4. Each optical head 1,2 comprises along a common optical axis thereof a light source 5, having a substantial portion of its output in the near infra-red region of the optical spectrum, together with suitable projection optics which in this embodiment includes a concave mirror 6, a condenser lens or lens array 7 and a projection lens or lens array 8 to provide a diverging beam of field angle alpha with a smoothly varying intensity profile. The light sources in this embodiment are rendered invisible to the viewer by virtue of the near infra-red wavelengths used. However, it will be appreciated that other wavelengths of light may be used in conjunction with or in place of infra-red wavelengths.

The spectral output and intensity of light output are controlled by means of optical filters 9,10. The beam passes through a beam divider or beamsplitter 11 which divides the beam intensity in a fixed ratio. The type of beam divider shown in Figure 1 is a glass plate 11 coated with a multi-layer partially transmissive coating, inclined at 45 degrees to the optical axis. Alternatively, a beam-splitting cube could be used. Light direct from light source 5 not passing through the beam divider 11 is intercepted by a light trap 12. The beam then passes through a window 13.

Optical receiver/transmitter head 1 radiates diverging beam 14 through its window 13 and similarly optical head 2 radiates diverging beam 15. Relative orientation of optical heads 1,2 is such that their respective optical axes are incident so that beams 14 and 15 overlap to create an

illuminated volume of space 16 in front of the video display screen in which the viewer may move at will. The retroreflective target 3 worn by the viewer is typically mounted at the centre of a pair of spectacles or attached directly to the viewer's head in the region of the eye mid-point. The retroreflective target 3 may be either a high gain screen, a single retroreflective prism or an array of small prisms.

Herein retroreflective refers to any reflective device and/or material from which a substantial portion of incident electromagnetic radiation is reflected back along its incident path, i.e. through 360 degrees. A single element prism to return light rays back along the same path would be used in situations where the superior optical performance provided by a single element prism is required. In some cases it may be desirable to use such a prism for aesthetic reasons.

For simplicity the retroreflector 3 is shown in Figure 1 to be at the centre of the volume 16 corresponding to the point of intersection of the optical axes of the two beams 14,15 (i.e. of the two optical heads 1,2). Light rays 17,18 intercepted by and incident on retroreflector 3 are returned along the same path (in the case of a high gain screen the effect is similar but the mechanism is that rays not scattered in the incident ray direction experience negligible gain). Light ray 17 returning to the beam divider 11 of optical head 1 is split and a portion 19 of the returning light is reflected by beam divider 11 toward an imaging sensor 20 equipped with a lens or lens array 21 whose field angle matches that of the projected beam 14. An infra-red filter 22 is used to select only light of the same wavelength as the light source 5. Similarly, a portion 23 of the ray 18 is received by imaging sensor 20 of optical head 2.

Each light ray portion 19,23 results in a corresponding sensor image within the respective imaging sensor 20. The following description relates to one such sensor image by describing components of one sensor 20 and is equally applicable to the other sensor image and sensor. Within the sensor 20 the sensor image is formed on a two-dimensional array of photodetectors whose responses are thresholded such that a binary image consisting of a single spot moving against a black background is formed. Alternatively, a raster scanning sensor typically comprising a CCD video camera could be used. By carrying out analogue-to-digital conversion of the signal, the

spot intensity is characterised in terms of a number of grey levels - typically up to 256. By measuring the position in the matrix of the sensor(s) of the peak of the spot's intensity profile or, in the case of a spot having a flat topped profile, its centroid and using the known orientation in space of the sensor camera it is possible to define a ray vector that passes through the centre of the retroreflector 3.

Another form of sensor based on Position Sensing Detectors (PSD) could be used to determine the position of a light spot in two dimensions. PSD's uniquely consist of a single sensitive surface layer but generate an output photocurrent which is directly proportional to the position of the light spot on the surface. PSD's can provide a more cost effective alternative to the aforementioned sensor types in some applications.

By computing the intercept of the ray vectors from each sensor 20 the position of the target retroreflector 3 in three dimensional space is obtained. The determination of the spot position in this embodiment is carried out by electronic circuitry 24,25 associated respectively with optical heads 1,2 and which each automatically locates the peak intensity in the matrix of associated sensor 20 by searching for the maximum intensity along each line of data in a frame as it is read out of that sensor. Alternatively, it is possible to store each frame of the image in a memory and then locate the spot by algorithm driven data analysis.

In the embodiment shown in Figure 1, processing of data from both sensors 20 is carried out simultaneously at frame refresh rate. Alternatively, it could be carried out sequentially, with the sensor outputs being multiplexed, in which case co-ordinates computed by electronic circuits 24,25 would be delivered every other frame, for example. The computed x,y co-ordinates from each sensor 20 are transmitted by respective circuits 24,25 to a processor 26 where they are used to determine the co-ordinates x,y,z of the target retroreflector 3 in three dimensional space within volume 16. It will be appreciated although the described electronic image processor means 4 comprises three distinct circuit elements 24,25,26 that these could be substituted by unitary or other means either hardwired or software controlled.

Additional sensors may be used to improve the accuracy of the computation. Instead of sensors with two-dimensional detector arrays it is also possible to use linear arrays, which will provide greater accuracy. However, at least three such sensors would be required, i.e. three optical heads would be required.

By using polarising filters it is possible to improve ambient background illumination rejection characteristics. Similar benefits may be gained by modulating the light source.

Several different optical configurations are possible, including one in which the optical heads 1,2 are ceiling mounted or otherwise mounted overhead with the retroreflector 3 being attached to the top of a helmet worn by the viewer, for example.

The aforedescribed head tracking system could be used to determine head velocity and acceleration and to recognise different types of head movements that could be used in interactive games, for example nodding and shaking of the head.

It should be appreciated that the optical components of the aforedescribed head tracking system are conventional in nature. However, the invention could be implemented with a variety of optical technologies including Fresnel optics, holographic optical elements and micro-optics.

Arguably the most expensive components of the aforedescribed embodiment are the sensors 20. Therefore, it is desirable to produce a head tracking system requiring only a single sensor. This could be done by intercepting light rays 19,23 (seen in Figure 1) by corresponding light guides based on mirrors, relay optics or fibre optics, etc all leading to a single sensor (20). Operation of light sources 5 and the single sensor could be multiplexed to determine sequentially the vectors for retroreflector 3.

One such single sensor arrangement is shown in a second embodiment of head tracking system illustrated in Figure 2. In this second embodiment two optical transmitter heads 100,101 each comprise a light source 5, lens or lens array 8 and beamsplitter 11 resulting in two diverging beams of light

BNSDOCID: <WO__9617258A1_I_>

14,15 converging on illuminated volume of space 16 in which retroreflector 3 can be moved. The transmitter heads 100,101 share a single optical receiver head 103 which comprises a single detector or imaging sensor 20 and two planar mirrors 104,105. Mirror 104 is disposed so as to reflect light incident from beamsplitter 11 of optical transmitting head 100 into sensor 20 and similarly mirror 105 reflects light received from transmitter head 101 into the sensor. Conveniently, mirrors 104 and 105 are mutually perpendicular as shown in Figure 2. Alternatively, they may be relatively disposed at a more convenient or optimum angle as required. It should be appreciated that an optical combiner, in the form of a prism for example, could be used in place of mirrors 104,105.

Electronic circuit and computation means 106 are associated with the detector or sensor 20. Self-evidently for the operation of this embodiment of the invention it is necessary for means 106 to be able to differentiate output from sensor 20 resulting from optical beam 14 from that resulting from beam 15. Conveniently, light beam 14 and the associated optical transmitting head 100 provides a first optical channel A and beam 15 and optical head 101 provide a second optical channel B. Differentiation of sensor output may be effected by synchronising light source pulsing frequencies of optical channels A and B with that of read-out electronics 107. Typically, the read-out electronics 107 permits the processing of output signals from sensor 20 including amplification, filtering, analogue to digital conversion, noise removal, multiplexing and any other required signal conditioning enabling the output of voltages or other digital signal means that can be used by other components of the computation means 106.

A spot co-ordinate determination tracking algorithm in component or segment 108 of computation means 106 receives multiplexed input from read-out electronics 107 to enable means 106 to determine by application of the algorithm position vectors relating to retroreflector 3 corresponding to optical channels A and B respectively and thereby to output the spatial position of the retroreflector 3. In effect the tracking algorithm is able to determine the trajectory of a target in the associated optical channel A or B illuminating a detector element in the sensor 20.

In a third embodiment of the invention, shown in Figure 3, each optical channel has two light sources 5A and 5B. Light from sources 5A and

5B of optical head 200 is transmitted as coincident diverging beams 14A and 14B respectively. Similarly, light from optical head 201 is in the form of coincident diverging beams 15A and 15B. These beams 14A,14B,15A and 15B illuminate a volume of space 16 in which retroreflector 3 is able to be moved.

Light from sources 5B has an angular intensity distribution profile shown in the diagram of Figure 3a wherein the 'Y'-axis is intensity and the 'X'-axis is the angle theta with x=0 corresponding to the optical axis of the optical head 200 or 201. Similarly, the angular intensity distribution profile of light from sources 5A is shown in the diagram of Figure 3b. It will be apparent that the light sources 5A have a uniform angular intensity profile and correspond to the type of light sources 5 which may be used in the aforementioned first and second embodiments, whilst light sources 5B have the non-uniform symmetrical profile shown in Figure 3a. To provide the flat intensity profile of light sources 5A filter or other means may be utilised. The filter or other means may be diffractive or holographic optical elements which accept incoming light and redistribute it over some pre-specified polar diagram.

In this third embodiment each optical head 200,201 is provided with respective receiving sensors 220. Reflected light 19A and 19B corresponding to beams 14A and 14B respectively are incident on sensors 220 of optical head 200. Similarly, reflected light 23A and 23B correspond to beams 15A and 15B respectively and are incident on sensors 220 of optical head 201. Unlike the aforementioned embodiments in which sensors 20 determine the trajectories of light 19,23 reflected from retroreflector 3 by the position of 'spots' formed on the sensors, in this embodiment the sensors 200 measure the intensity of incident light 19A, 19B and 23A, 23B respectively. The received intensity will be a function of the angular bearing with respect to each light source 5A,5B and the distance of the retroreflector 3 from each light source.

Range-angle ambiguities are avoided in this embodiment by using light sources 5A,5B having different wavelengths and sensors 220 comprising single element detectors 220A,220B each able to measure light intensity of the wavelength of source 5A or 5B respectively. The range dependence of the reflected signal can thus be eliminated by ratioing the signals from the

BNSDOCID: <WO___9617258A1_I_>

paired detectors 220A,220B. Alternatively the sources 5A and 5B could be cvharacterised by modulating the amplitudes of the beams at different temporal frequencies. The signals obtained after filtering by the processing electronics would then be ratioed to eliminate range dependence.

An improvement to this third embodiment (not shown) is to provide a further third optical channel in order that an unambiguous determination of the co-ordinates of retroreflector 3 can be obtained. By measuring intensity rather than position a single element detector can be used in place of the more complex requirements of the first two embodiments. This may offer cost advantages.

In the aforedescribed embodiments nodding or shaking of the head may be detected by using a movement tracking algorithm within associated computation means which is able to discriminate between different movement patterns of reflected light. Alternatively, specific means may be provided for determining such movement as hereinafter described.

A fourth embodiment of the invention, shown in Figures 4, is adapted to detect the nodding or shaking motion of the head wearing a retroreflector in the form of a spot or disc 303. The optical transmitter heads 300,301 of this fourth embodiment each have a single detector element 320 toward which respectively reflected light beams 319,323 are reflected by corresponding beamsplitter 11. In optical head 300 a mask 308 is disposed between detector 320 and beamsplitter 11, similarly in optical head 301 a mask 309 is provided. Detail (a) shows that mask 308 is provided with a vertical slot or aperture 310 and detail (b) shows that mask 309 is provided with a horizontal slot or aperture 311, i.e. apertures 310 and 311 are mutually perpendicular. On detail (a) the resultant image of disc 303 is shown as spot 312 and similarly on detail (b) the image is shown as spot 313.

Shaking of the head will result in the spot 312 oscillating in the horizontal plane as shown by the arrows on detail (a). This will result in an output 314 from sensor 320 of optical head 300 which as determined by computation means 315 will have an oscillating waveform as represented by waveform 316. However, if the head is being nodded then spot 313 will move in the vertical plane shown by arrows in detail (b) which will result in sensor 320 of optical head 301 outputting signal 317 resulting in a similar

oscillating waveform also 316. In this embodiment one optical channel is used to detect nodding and the other to detect shaking of the head. Further optical channels could be provided to detect position in the manner of the aforedescribed embodiments.

In a fifth embodiment of the invention a retroreflector device 403 shown in detail in Figure 5a comprises two mutually perpendicular typically respectively vertically and horizontally disposed striped elements 404,405 wherein the black bars are of low reflectivity and the white bars are of high reflectivity. Element 404 has widely spaced bars and element 405 has closely spaced bars. Many different configurations are possible. The essential requirement is to have widely spaced and closely spaced bars patterns arranged orthogonally.

The retroreflector 403 is used in conjunction with optical transmitter/receiver heads in accordance with said first to third embodiments of the invention. A single element detector 420 is represented in Figure 5b on which is superimposed an outline image 403' of the retroreflector 403 moving horizontally in the direction of the arrow. Detector 420 will occupy sequentially positions 420,420' and 420'' relative to the image 403'. A signal from the detector 420 will have a relatively high frequency waveform such as that shown as 421 which indicates that the retroreflector 403 is being shaken from side to side. From Figure 5c it will be apparent that nodding of the retroreflector up and down will result in a relatively low frequency output waveform 422.

In the sixth embodiment of the invention shown in Figure 6 two optical heads 500,501 each have light sources 505 one of which is shown in detail (a). Each light source 505 is able to generate light at four different wavelengths A,B,C,D, e.g. four light emitting elements may be used. This results in volume of space 16 being illuminated from optical head 500 by coincident diverging beams of light 14A,14B,14C,14D and from optical head 501 by coincident diverging beams of light 15A,15B,15C,15D. Typically, such illumination may be in sequential pulsed form as shown by transmitted signal 510 where pulses corresponding to the different wavelengths and beams A-D follow one after another.

BNSDOCID: <WO___9617258A1_I_>

Advantageously, this sixth embodiment allows for the tracking of movement of four target retroreflectors 503A,503B,503C,503D each adapted to reflect only light of wavelengths A,B,C,D respectively. This is accomplished as shown in detail (b) of the retroreflector 503B by the retroreflector 503 being overlaid by a transmissive filter (in this case 511B) which absorbs all light except that of the corresponding wavelength. It will be understood that the use of four wavelengths and targets herein described is only an example and that the principle of this embodiment can be utilised where two or more targets are to be tracked.

The seventh embodiment of the invention tracks multiple retroreflective targets 603A,603B,603C,603D by virtue of each target having a distinct pattern as shown in Figure 7. These targets each has a unique spatial array of retroreflective dots known to associated computation means 600 from a digitised bitmap or look-up table/template 601. At any given instant the computation means can from signals received from sensors 20 generate a video frame 602 on which will appear 'spots' corresponding to each dot of targets 603 within space 16. From this frame it is possible to calculate the spatial position of each dot and from this determine in conjunction with template 601 the actual position of the individual targets. Both the method adopted in this seventh embodiment and that described in relation to the sixth embodiment would be particularly useful when tracking the movement of different body parts, for example one retroreflector could be associated with the head, one each with the shoulders and the remaining two with the hands of someone moving within space 16.

In the eighth embodiment of the invention shown in Figure 8 two optical transmitting/receiving heads 700,701 each illuminate a flat surface 716 with respective diverging beams of light 14,15. Light sources 5 within optical heads 700,701 result in a non-uniform light pattern, such as for example in the aforedescribed manner of the third embodiment of the invention. The juxtaposition of light beams 14,15 on flat surface 716 provides that the position of a retroreflector disc or puck 703 on the surface 716 can be determined merely by analysing the intensities of reflected light 19,23 and comparing that with an intensity look-up table 710 held within computation means associated with this embodiment. On surface 716 a contour map is shown in which those contours radiating from corner 717 correspond to beam 14 and those radiating from corner 718 correspond to beam

BNSDOCID: <WO__9617258A1_I_>

15. An application of this eighth embodiment would be in a board game having some 100 to 200 individual patches each identifiable by a position on the look-up table 710.

Hitherto the description of the invention has centred on its application in sensing position and/or movement. The same technology could be used also for generating a signal input by, for example, masking a retroreflector until a signal is to be generated or providing a shutter to mask a retroreflector such that a signal is generated once the reflector is masked. Simple devices for accomplishing this are shown in Figure 9. That shown in Figure 9a comprises a hand held plastics moulding 800 having a cavity 801 which can be enclosed by a resiliently flexible closure member 802. A retroreflector 3 is attached to a rear wall of the cavity 801 and at rest the member 802 is in the upper position shown. By applying light pressure to button 803 the closure member 802 can be moved to the closed position shown in dotted outline thereby masking the retroreflector 3.

In the example shown in Figure 9b a retroreflector 3 is housed within a cavity 810 and masked by a closure member 811 pivotal about pin 812. When pressure is applied to button 813 to compress leaf spring 814 the closure member 811 moves to an upper position at which reflector 3 is unmasked.

The more complex example shown in Figure 9c is adapted for use with an embodiment of the invention able to discriminate between the position of different targets by illuminating and/or detecting different wavelengths of light. This example has a hollow body 820 housing an elongate retroreflector 3. Buttons 821,822,823 are operative to open shutter mechanisms disposed respectively behind filters 824,825,826. These filters may correspond to each of three wavelengths of illumination or alternatively they may correspond with each of three wavelengths of detection. In the latter case the illustrated example will be illuminated with 'white' light and only reflect that 'colour', i.e. wavelengths associated with the filter whose shutter is open.

Aforedescribed embodiments have used single detectors to measure light intensity or 2 dimensional detector arrays (for example, CCD cameras) to determine reflected spot position. Figure 10 illustrates a sensor layout 920 utilising linear detector arrays 900, 901 which, for example, receives light

BNSDOCID: <WO__9617258A1_I_>

beam 919 reflected from a retroreflector (not shown). A lens 921 focuses the spot of beam 919 on a beamsplitter cube 902 from which beams 919A and 919B are reflected. Lenses 903,904 focus respectively beams 919A,919B to provide elongate images respectively 905,906 of the spot of beam 919.

As can be seen from Figure 10 image 905 is elongate in the horizontal plane and image 906 is elongate in the vertical plane. Conversely, linear detector array 901 on which image 905 is caused to fall is elongate in the vertical plane and will thus detect the vertical 'position' of the image 905. Similarly, linear detector array 900 on which image 906 is caused to fall is elongate in the horizontal plane and detects the horizontal 'position' of the image 906. It will be clear that each array 900,902 comprises a plurality of sensors each of which is connected to read-out electronics shown respectively as 907,908. It will be appreciated that one dimensional PSD's could be used as detector arrays 900,901.

It will be understood that the optical arrangements illustrated in the drawings are outline sketches and diagrams which show the general principles of operation of various embodiments of the invention. In addition to the optics and/or optical elements shown a workable design will comprise appropriate housing means and possibly may comprise additional lens elements for correction of distortions, optical filters, relay lenses, exit and entry masks and/or windows, etc.

In embodiments of the present invention so far described the target(s) have been moveable in a static volume of light created by stationary illumination means. It should be understood that in alternative embodiments the target(s) may be static and the illumination means may form part of apparatus mounted to a moveable object, typically the head of a user. The appended claims are intended to extend to this variation. Also, although previously described embodiments are designed to determine precise spatial position relative to a fixed datum, embodiments are envisaged in which either or both of the position and orientation of the illumination means and target(s) is or are determined relative to one another and/or relative to an arbitrary datum such as a given start position of the moveable target(s) or illumination means.

In all of the preferred embodiments above described the reflector has been a retroreflector but it is this is not considered to be an essential feature of the invention. In some applications, where the imaging sensor requires only a small portion of the incident light to be reflected back along the same path, a conventional diffuse reflector may be acceptable.

BNSDOCID: <WO___9617258A1_I_>

CLAIMS:

1. An optical triangulation tracking system comprising means for creating at least two beams of light, each being divergent, mounted relative to one another in a predetermined spatial and angular relationship such that the beams intersect one another thereby illuminating a volume of space, at least one reflector relatively moveable within said volume of space, a light detection device adapted to receive light from each of the two beams which has been reflected back along its path of transmission by the reflector and an image processing system connected to each of said detection devices, the arrangement being such that relative movement between said light beam creation means and the reflector will be monitored by the image processing system which determines from received images by triangulation spatial coordinates of the reflector thereby to determine the relative position within said volume of space of the reflector.

2. A system as claimed in claim 1, characterised in that said at least one reflector is a retroreflector.

3. A system as claimed in claim 1 or claim 2, characterised in that the image processing system is adapted additionally to monitor angular movements of the retroreflector.

4. A system in accordance with claim 3, characterised in that two light detection means are provided with each being masked by a corresponding slitted aperture plate with the slits of the aperture plates being relatively mutually perpendicular in orientation.

5. A system in accordance with any preceding claim, characterised in that the detection device comprises a plurality of light detection means each associated with a respective one of said divergent beams and each adapted to receive light reflected back along its path of transmission by the reflector.

6. A system in accordance with claim 5, characterised in that it further comprises a beam splitting means associated with each light detection means through which passes both a corresponding one of the divergent beams and light reflected by the reflector therefrom, the arrangement providing that

the path of reflected light exiting the beam splitting means and the paths of light of the divergent beams entering said beam splitting means are angularly displaced.

7. A system in accordance with claim 6, in which light of the divergent beams passes directly through the corresponding beam splitting means and the path of light reflected by the retro-reflector is angularly displaced by these beam splitting means.

8. A system in accordance with any one of claims 5 - 7, characterised in that the light detection means each comprises a two dimensional detector array.

9. A system in accordance with any one of claims 5-8, characterised in that the light detection means each comprises a CCD video camera.

10. A system in accordance with any one of claims 5-9, characterised in that the light detection means each comprises a Position Sensing Detector.

11. A system in accordance with any one of claims 1 to 7, characterised in that the divergent beams of light are each paired coincident light beams with a first beam of each said pair having a first wavelength and a uniform angular intensity profile and the second beam of that pair having a second wavelength and a non-uniform symmetrical intensity profile, and in which the light detection means or device are or is adapted to measure the intensity of light incident thereon and the image processing system is adapted to determine the trajectory of incident light from the intensities received from said paired uniform and non-uniform light beams.

12. A system in accordance with claim 11, characterised in that filter means are utilised to provide both said uniform and said non-uniform intensity profiles.

13. A system in accordance with any one claims 5 to 12, characterised in that the light detection means are provided by a single detection device optically multiplexed so as to function as a plurality of individual detection means.

BNSDOCID: <WO___9617258A1_I_>

14. A system in accordance with claim 11, characterised in that light guides are provided each to channel light corresponding to each divergent beam and reflected by the reflector toward the single detection device.

15. A system in accordance with any one of the preceding claims, characterised in that the reflector comprises a reflecting device having a plurality of spaced apart retro-reflectors the relative positions of which are known by the image processing system, the arrangement enabling both position and orientation of the reflecting device within the illuminated space to be determined.

16. A system in accordance with any one of the preceding claims, characterised in that the image processing system can identify predetermined types of motion of the or each retro-reflector.

17. A system in accordance with any one of the preceding claims, characterised in that the amplitude of the light of each divergent beam is modulated.

18. A system in accordance with any one of the preceding claims, characterised in that polarising devices are used to reject background illumination.

19. A system in accordance with any one of claims 6-18, characterised in that the beam splitting means is a half-silvered mirror.

20. A system in accordance with any one of the preceding claims, characterised in that the reflector is a retro-reflector in the form of a high gain screen with a narrow gain profile around the angle of incidence.

21. A system in accordance with any one of claims 1 to 19, characterised in that the reflector is a retro-reflector in the form of one or more retro-reflective prisms.

22. A system in accordance with any one of the preceding claims, in which the divergent light beams are laser light within one or more narrow band widths of wavelength.

23. A system in accordance with any one of the preceding claims, characterised in that the divergent light beams are of near infrared wavelength(s).

24. A system in accordance with any one of the preceding claims, characterised in that the means for creating light is adapted to emit sequentially a plurality of light beams each having a different wavelength, a corresponding plurality of retro-reflectors are provided each being adapted by filter or other means to retro-reflect only light of an associated one of said wavelengths, and the light detection means are adapted to receive light from the plurality of retro-reflectors and by being multiplexed with the sequencing of the light emission are able to discriminate between light reflected from each of the retro-reflectors.

25. A system in accordance with any one of the preceding claims, characterised in that the reflector is a retroreflector housed in a body and in that a closure or shutter member is associated with said body, with the closure or shutter member being operative to mask or un-mask the retroreflector.

BNSDOCID: <WO___9617258A1_I_>

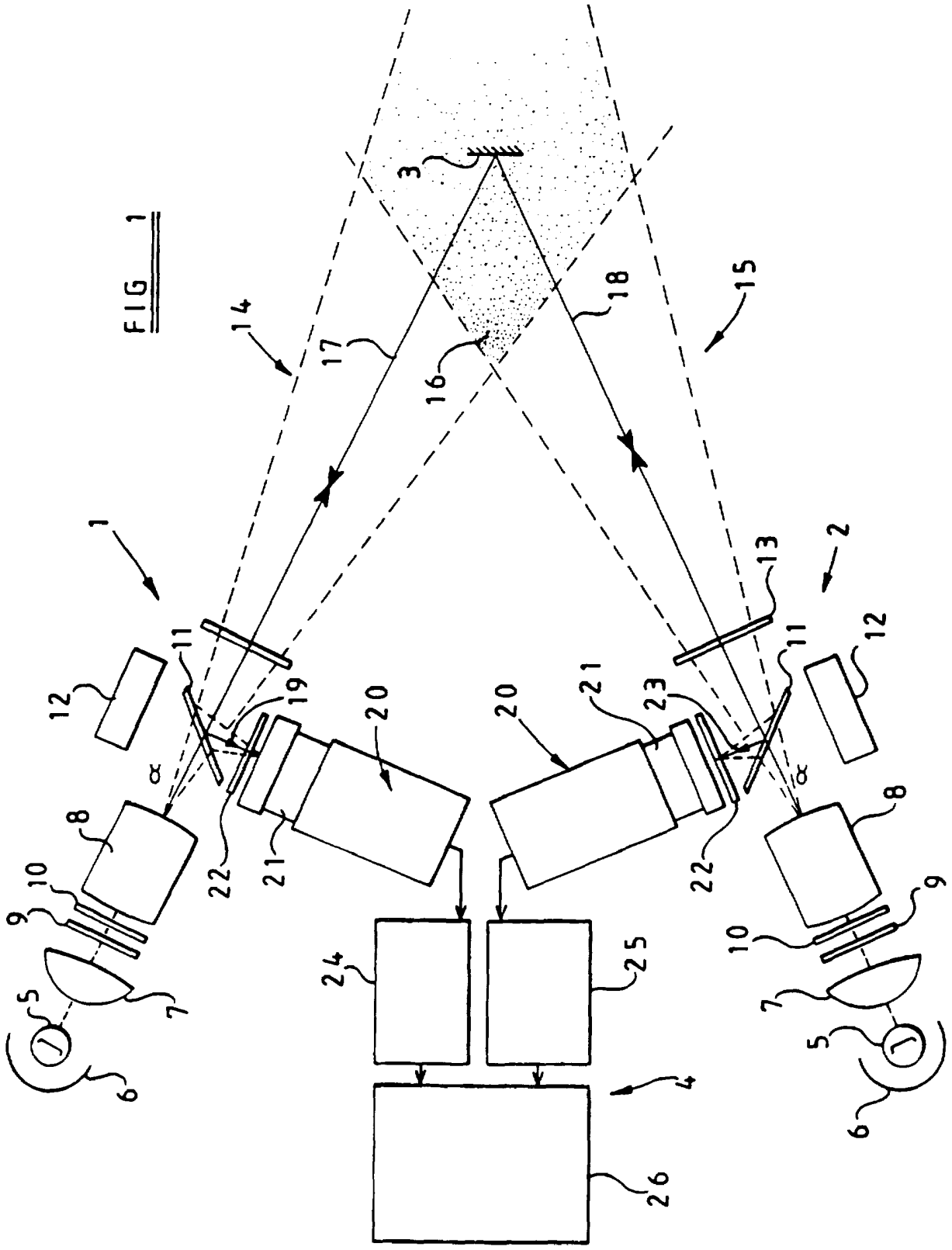

BNSDOCID: <WO__9617258A1_I_>

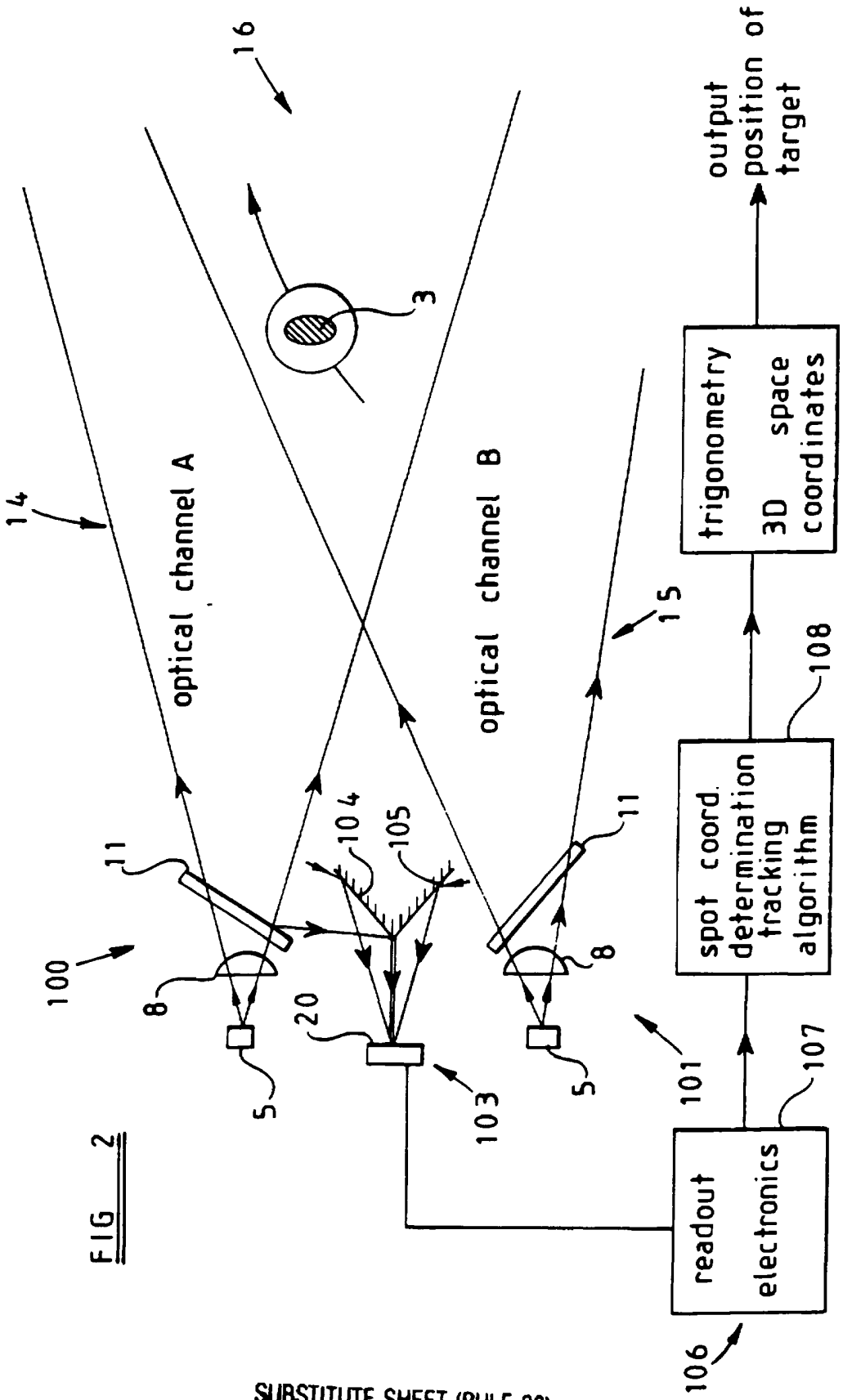

FIG 2

BNSDOCID: <WO___9617258A1_I_>

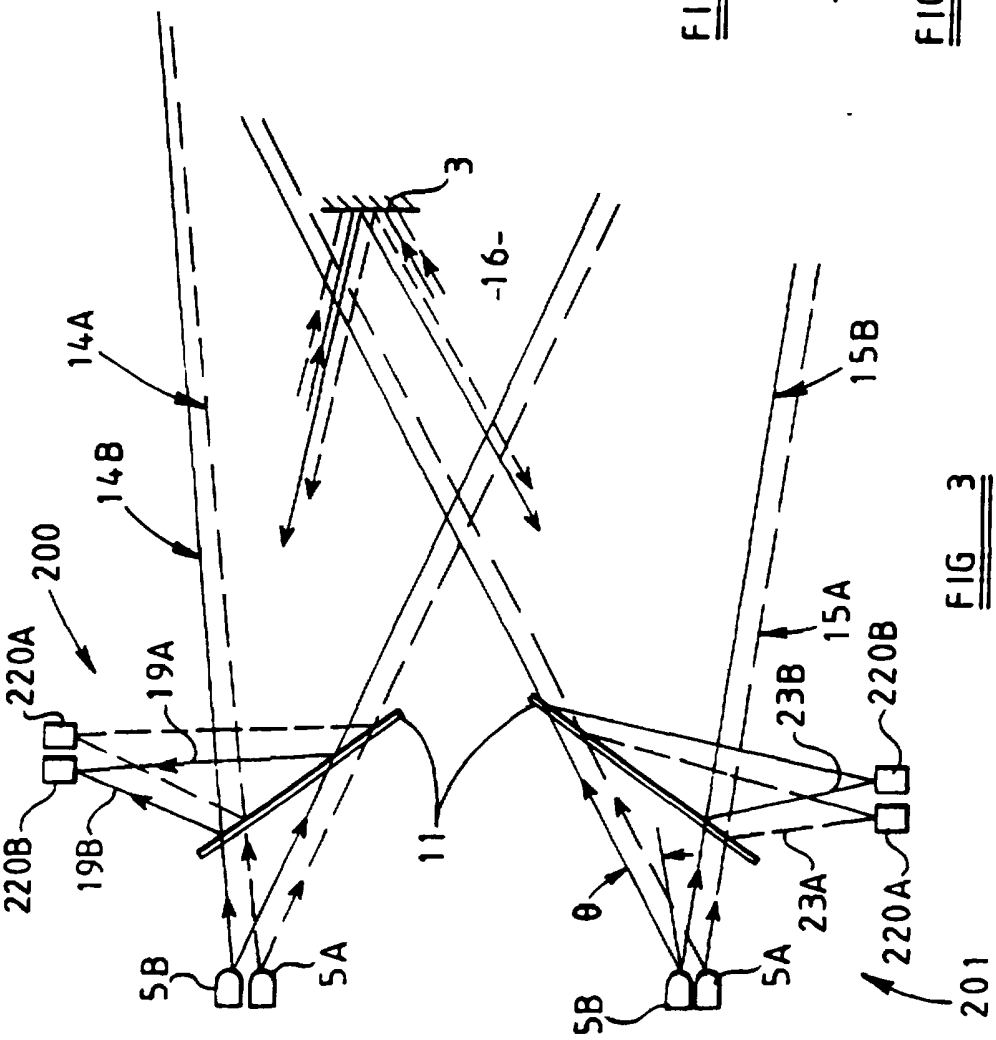

FIG 3

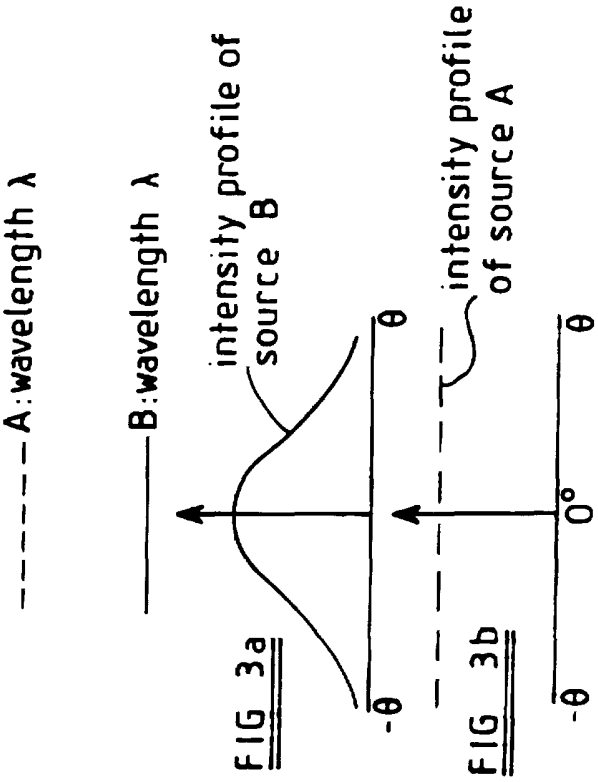

FIG 3a

FIG 3b

BNSDOCID: <WO___9617258A1_I_>

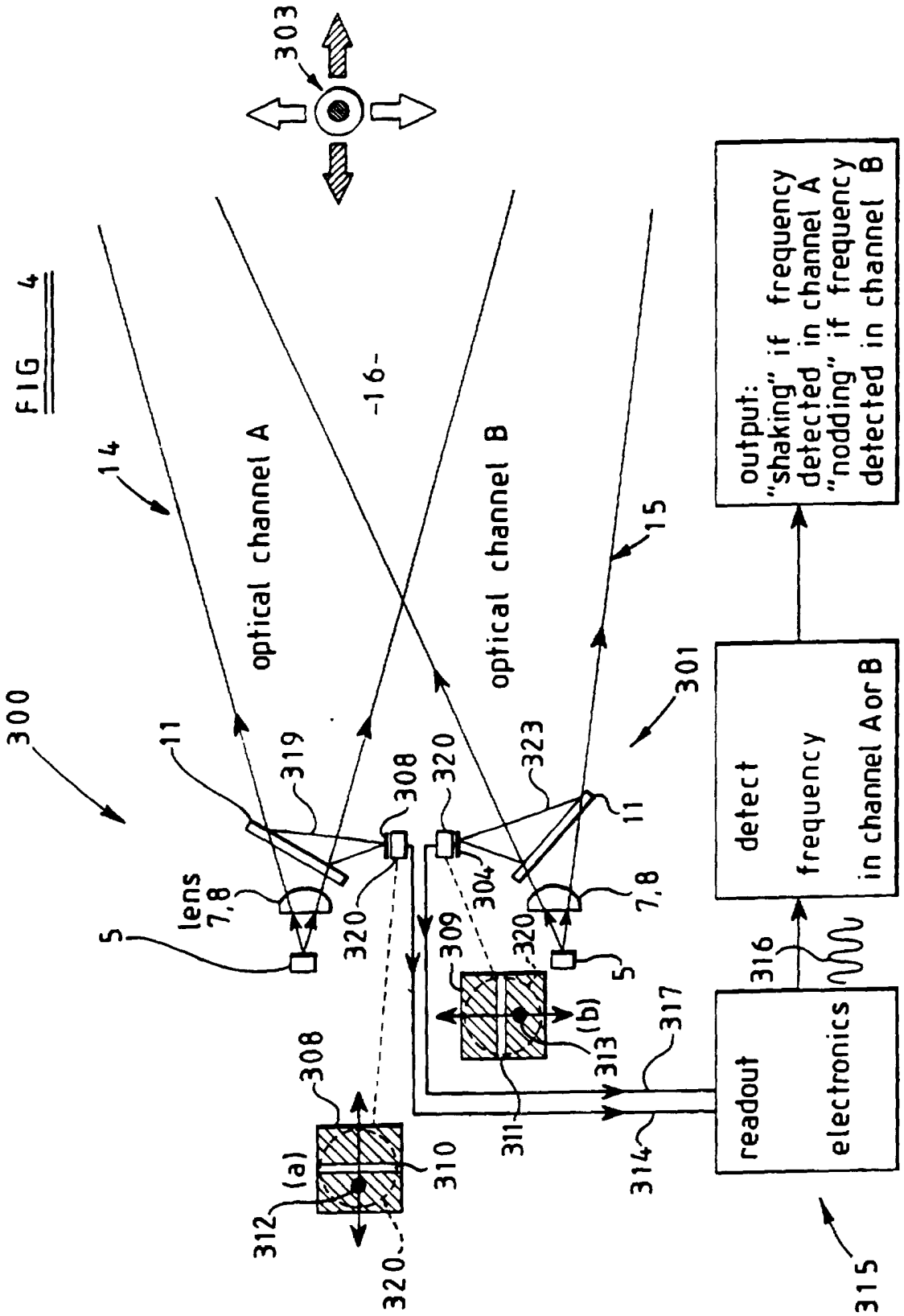
300
303
14
15
optical channel A
optical channel B
-16-
11
319
308
320
323
304
309
lens
7,8
5
301
(a)
(b)
310
311
312
313
314
315
316
317
readout
electronics
detect
frequency
in channel A or B
output:
"shaking" if frequency
detected in channel A
"nodding" if frequency
detected in channel B

FIG 4

reflector

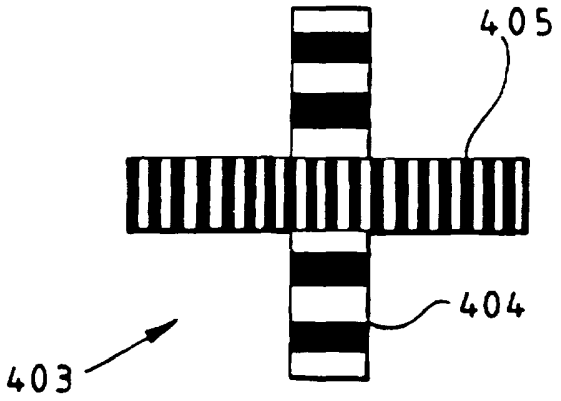

FIG 5a

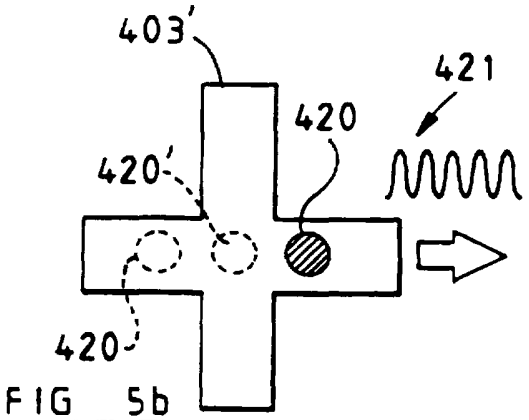

FIG 5b

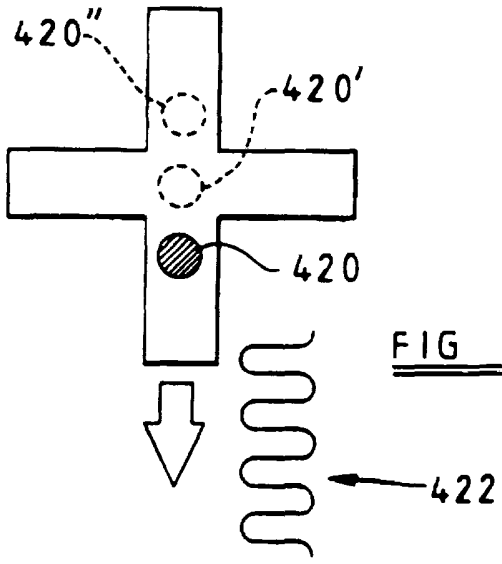

FIG 5c

BNSDOCID: <WO___9617258A1_I_>

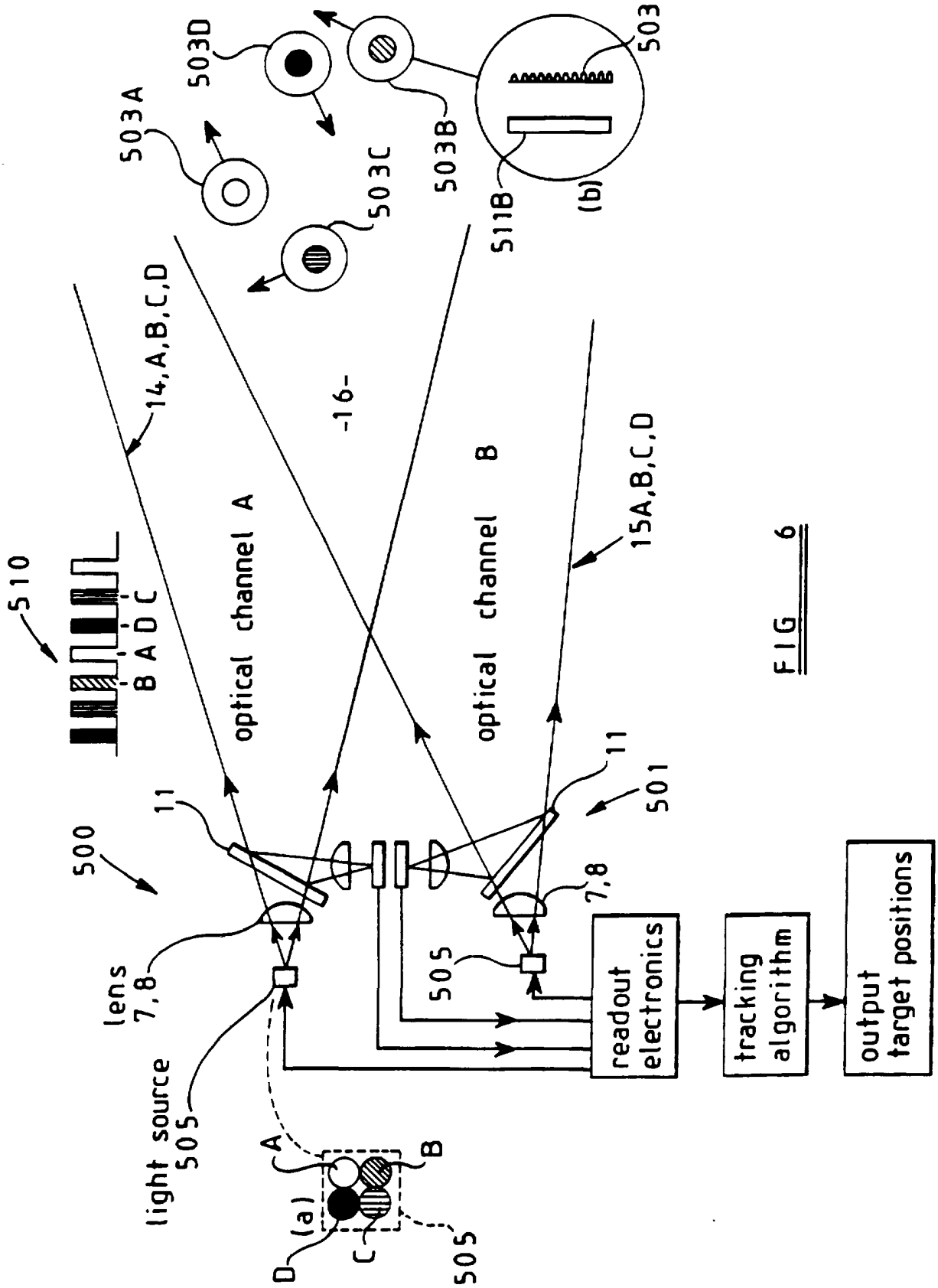

FIG 6

BNSDOCID: <WO___9617258A1_I_>

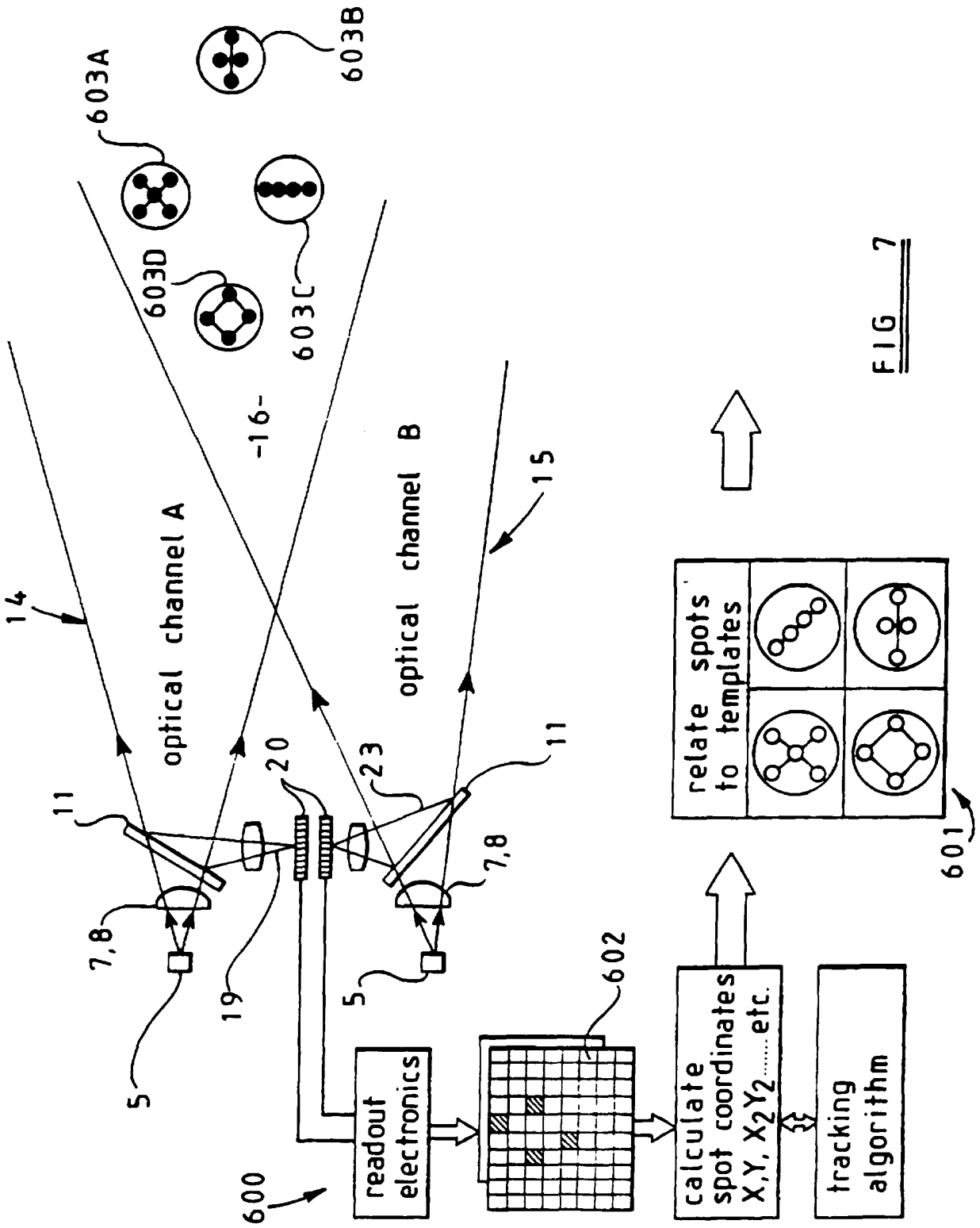
603A
603B
603D
603C
-16-
14
15
optical channel A
optical channel B
11
20
23
11
7,8
7,8
19
5
5
600
readout electronics
602
calculate spot coordinates X,Y, X2Y2.....etc.
tracking algorithm
relate spots to templates
601

FIG 7

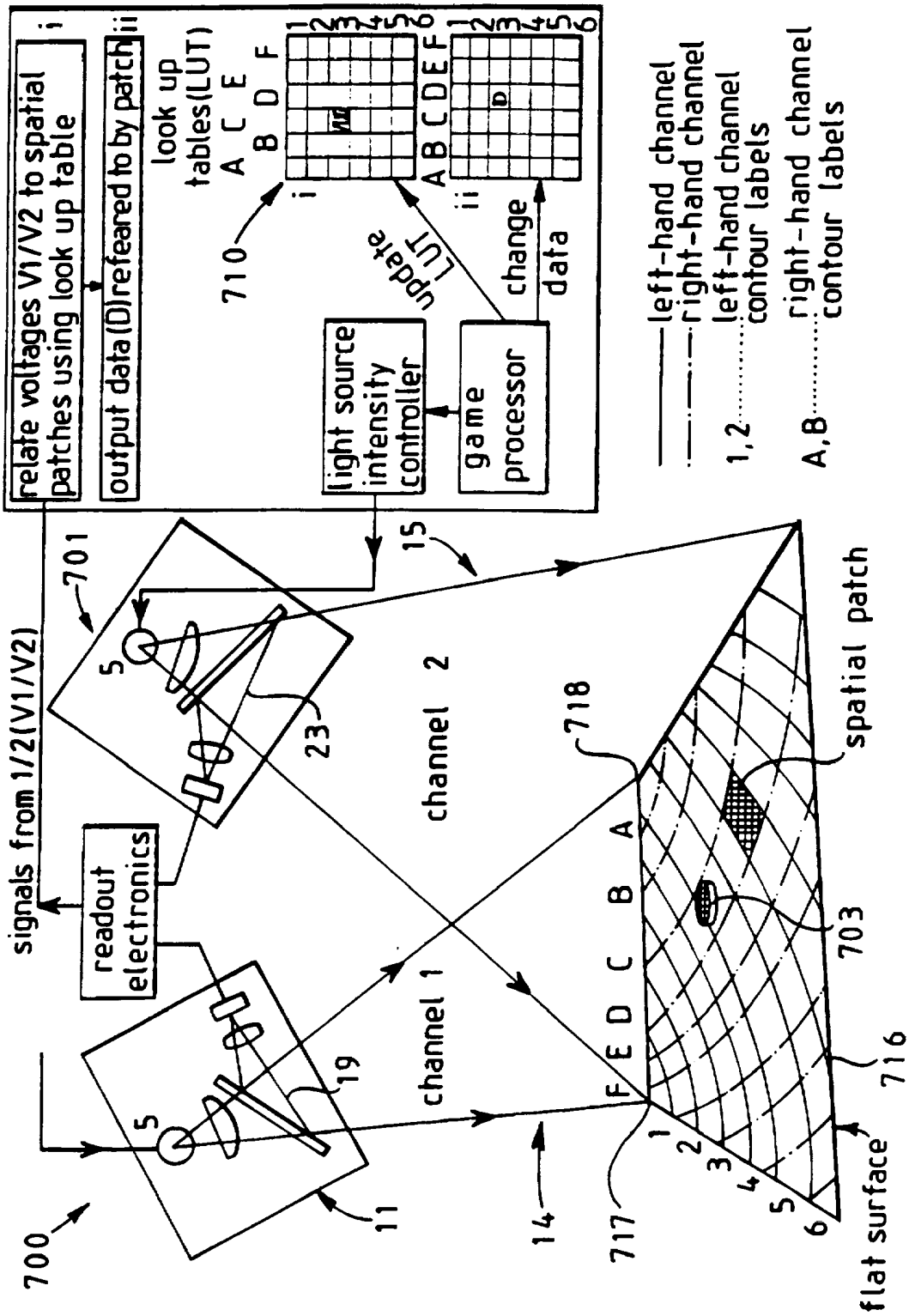

FIG 8

BNSDOCID: <WO___9617258A1_I_>

FIG 9a

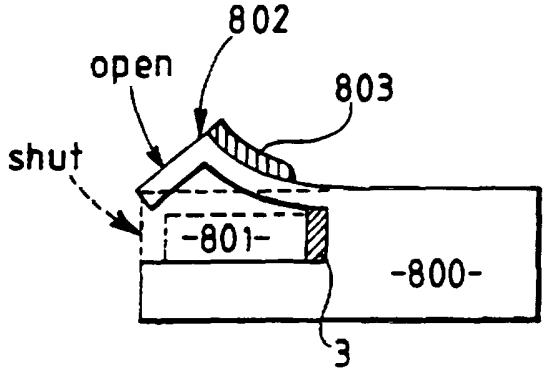

FIG 9b

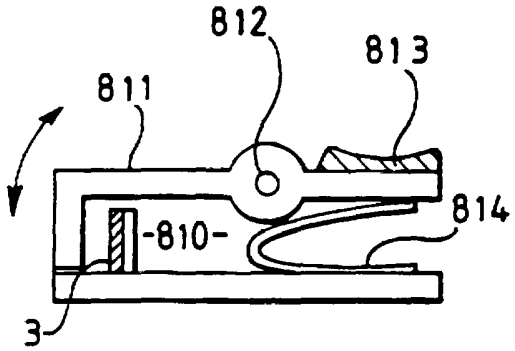

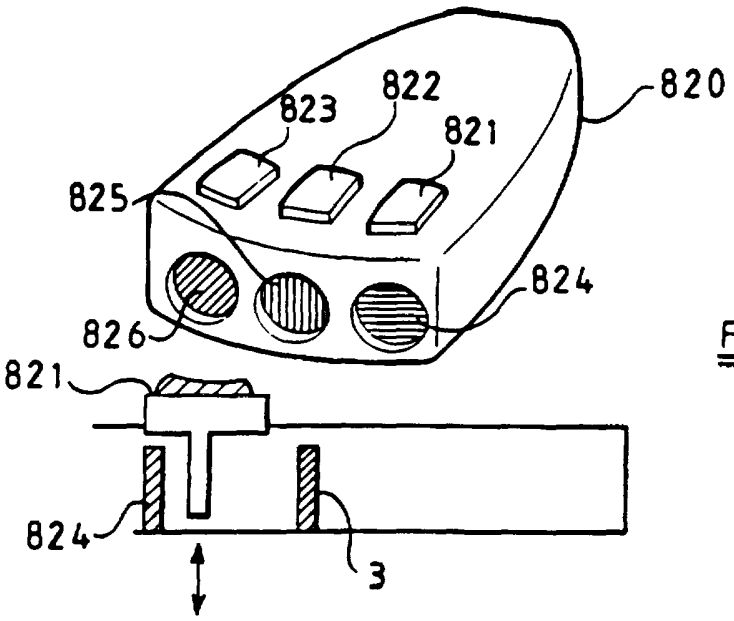

FIG 9c

BNSDOCID: <WO___9617258A1_I_>

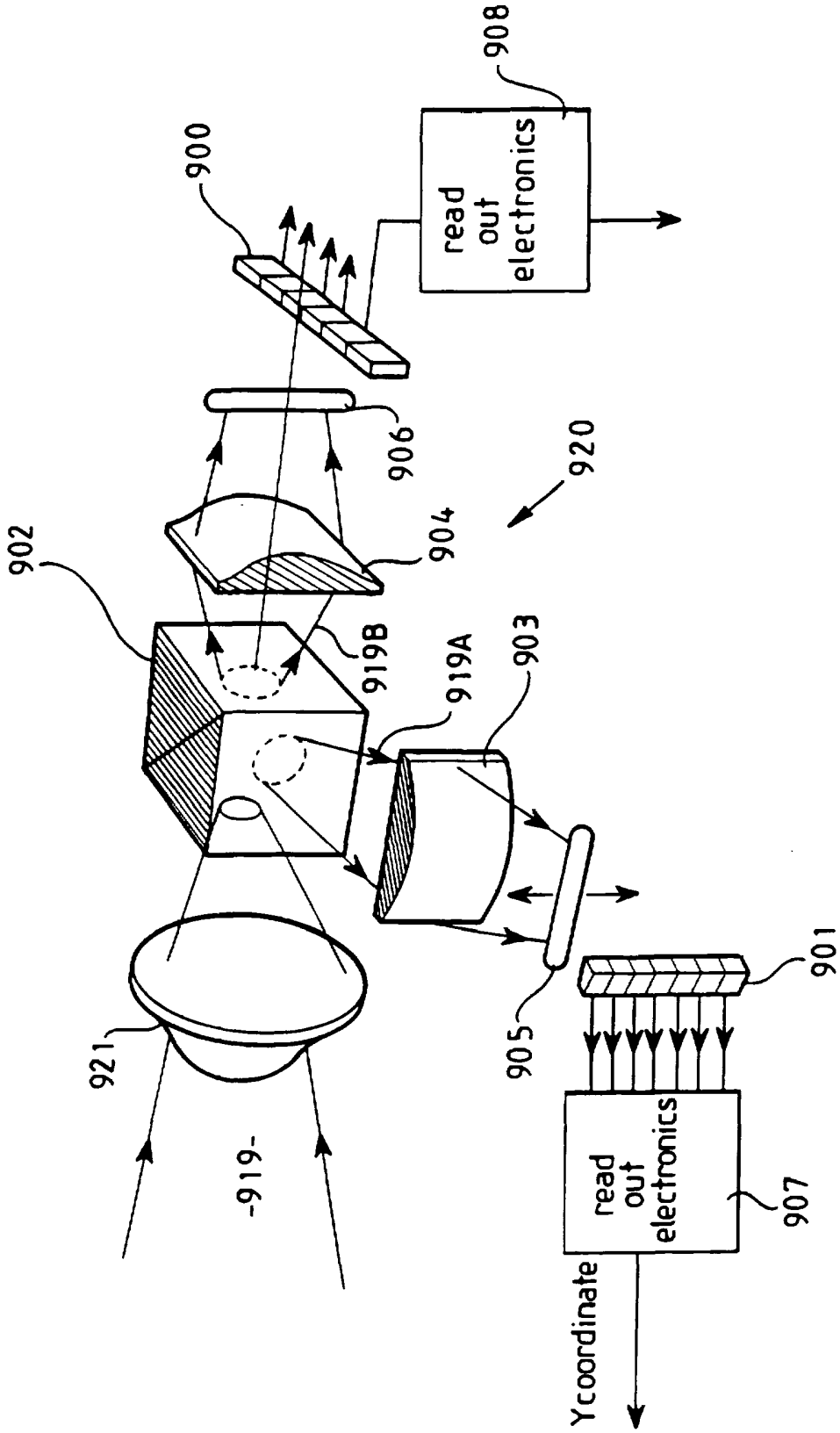

FIG 10

BNSDOCID: <WO__9617258A1_I_>