UNITED STATES PATENT AND TRADEMARK OFFICE

BEFORE THE PATENT TRIAL AND APPEAL BOARD

MOBILEYE GLOBAL, INC., AND
ZF ACTIVE SAFETY AND ELECTRONICS US LLC,

Petitioner,

V.

FACET TECHNOLOGY CORP.,

Patent Owner.

Case IPR2024-01110
Patent No. 9,335,255

PETITIONER'S NOTICE OF APPEAL

Pursuant to 35 U.S.C. §§ 141(c), 142, and 319 and 37 C.F.R. § 90.2(a), Petitioner Mobileye Global, Inc. ("Petitioner") hereby provides notice of appeal to the United States Court of Appeals for the Federal Circuit from the Final Written Decision of the Patent Trial and Appeal Board ("Board") entered on January 23, 2026 (Paper No. 42) ("Final Written Decision") and from all underlying orders, decisions, rulings, and opinions relating to the *inter partes* review of U.S. Patent No. 9,335,255 ("'255 patent") in Case No. IPR2024-01110. This Notice is timely under 37 C.F.R. § 90.3(a)(1), having been filed no later than sixty-three (63) days after issuance of the Final Written Decision.

In accordance with 37 C.F.R. § 90.2(a)(3)(ii), Petitioner states that the issues on appeal include, but are not limited to:

- the Board's determination that claim 15 of the '255 patent was not shown to be unpatentable under 35 U.S.C. § 103 as obvious over the combination of Gallagher and Lumia;
- the Board's factual findings, conclusions of law, or other determinations supporting or relating to the foregoing issues, and whether those findings, conclusions, or determinations comply with the Administrative Procedure Act, 5 U.S.C. § 701 *et seq.*; and
- all other issues decided adversely to Petitioner in any orders, decisions, rulings, or opinions underlying or supporting the Final Written Decision.

A copy of the Final Written Decision is attached to this Notice.

Pursuant to 35 U.S.C. § 142 and 37 C.F.R. § 90.2(a)(1), this Notice is being filed with the Director of the United States Patent and Trademark Office, and a copy of this Notice is being concurrently filed with the Patent Trial and Appeal Board. In addition, a copy of this Notice and the required docketing fees are being filed with the Clerk's Office for the United States Court of Appeals for the Federal Circuit via CM/ECF in accordance with 37 C.F.R. § 90.2(a)(2), Federal Rule of Appellate Procedure 15, and Federal Circuit Rule 15.

Date: February 22, 2026

Respectfully submitted,

By: /Cory C. Bell/
Cory C. Bell, Reg. No. 75,096
Counsel for Petitioner

CERTIFICATE OF SERVICE AND FILING

I hereby certify that on February 22, 2026, in addition to being filed and served electronically through the Patent Trial and Appeal Board's P-TACTS System, this **PETITIONER'S NOTICE OF APPEAL** was filed with and served on the Director of the United States Patent and Trademark Office via e-mail at the following:

Office of the General Counsel
U.S. Patent and Trademark Office
efileSO@uspto.gov

I also hereby certify that on February 22, 2026, this **PETITIONER'S NOTICE OF APPEAL** and the requisite docketing fees were filed with the Clerk's Office of the United States Court of Appeals for the Federal Circuit via CM/ECF.

I further hereby certify that on February 22, 2026, this **PETITIONER'S NOTICE OF APPEAL** was served by electronic mail on the following counsel for Patent Owner:

Michael D. Saunders
msaunders@princelobel.com

Bryan D. Atkinson
batkinson@princelobel.com

Dated: February 22, 2026

By: /Daniel E. Doku/
Daniel E. Doku
Senior Litigation Paralegal
FINNEGAN, HENDERSON, FARABOW,
GARRETT & DUNNER, LLP

Trials@uspto.gov
571-272-7822

Paper 42
Date: January 23, 2026

UNITED STATES PATENT AND TRADEMARK OFFICE

BEFORE THE PATENT TRIAL AND APPEAL BOARD

MOBILEYE GLOBAL, INC. and
ZF ACTIVE SAFETY AND ELECTRONICS US LLC,
Petitioner,

v.

FACET TECHNOLOGY CORP.,
Patent Owner.

IPR2024-01110[1]
Patent 9,335,255 B2

Before KEVIN F. TURNER, ROBERT J. SILVERMAN, and SEAN P. O'HANLON, *Administrative Patent Judges*.

O'HANLON, *Administrative Patent Judge*.

JUDGMENT
Final Written Decision
Determining No Challenged Claims Unpatentable
35 U.S.C. § 318(a)

Dismissing Patent Owner's Motion to Strike
37 C.F.R. § 42.23(b)

---

[1] ZF Active Safety and Electronics US LLC, which filed a petition in IPR2025-00748, has been joined as a petitioner in this proceeding.

I. INTRODUCTION

A. Background

Mobileye Global, Inc. ("Petitioner") filed a Petition for *inter partes* review of claims 12–15 and 17–23 of U.S. Patent No. 9,335,255 B2 (Ex. 1001, "the '255 patent"). Paper 1 ("Pet."), 1. Facet Technology Corp ("Patent Owner") filed a Preliminary Response. Paper 7 ("Prelim. Resp."). With our authorization (*see* Paper 11; Ex. 3001), Petitioner filed a Preliminary Reply (Paper 8) and a Second Preliminary Reply (Paper 12), and Patent Owner filed a Preliminary Sur-reply (Paper 10) and a Second Preliminary Sur-reply (Paper 15).

In its Preliminary Response, Patent Owner informed us that it had disclaimed claims 12–14 and 17–23. Prelim. Resp. 1; *see also* Inst. Dec. 6–7 (addressing Patent Owner's disclaimer); Ex. 2002 (Patent Owner's disclaimer).

On March 5, 2025, we instituted an *inter partes* review of claim 15 ("the challenged claim")[2] on the ground raised in the Petition. Paper 16 ("Institution Decision" or "Inst. Dec.").

Subsequent to institution, Patent Owner filed a Patent Owner Response (Paper 25, "PO Resp."), Petitioner filed a Reply to the Patent Owner Response (Paper 28, "Pet. Reply"), and Patent Owner filed a Sur-reply to Petitioner's Reply (Paper 34, "PO Sur-reply"). An oral hearing

[2] Because Patent Owner filed a statutory disclaimer of claims 12–14 and 17–23 of the '255 patent (*see* Ex. 2002) prior to our Institution Decision, no *inter partes* review was instituted as to those claims. Inst. Dec. 6–7; *see also* 37 C.F.R. § 42.107(e) ("No *inter partes* review will be instituted based on disclaimed claims.").

was held on December 5, 2025. A transcript of the hearing has been entered into the record. Paper 41 ("Tr.").

Additionally, Petitioner filed a Motion to Exclude that seeks to exclude Exhibits 2009–2012 and 2014. Paper 36 ("Motion" or "Mot. Exc."). Patent Owner filed an Opposition to Petitioner's Motion (Paper 37, "Opp. Exc."), and Petitioner filed a Reply to Patent Owner's Opposition (Paper 38, "Reply Exc.").

For the reasons that follow, we conclude that Petitioner has failed to prove by a preponderance of the evidence that claim 15 of the '255 patent is unpatentable. We also *dismiss* as moot Petitioner's Motion to Exclude.

B. Real Parties in Interest

Petitioner identifies itself as the sole real party in interest. Pet. 56.

Patent Owner identifies itself and Mandli Communications, Inc. as the real parties in interest. Paper 4, 3.[3]

The parties are reminded of their continuing obligation to update their mandatory notice information "within 21 days of a change of the information." 37 C.F.R. § 42.8(a)(3).

C. Related Matters

The parties indicate that the '255 patent is the subject of the following district court proceedings:

> *Facet Technology Corp. v. General Motors LLC*, No. 2:24-cv-00035 (E.D. Tex. filed January 22, 2024),

[3] Patent Owner filed an identical copy of its mandatory notices as Paper 6.

> *Facet Technology Corp. v. Mobileye Global, Inc.*, No. 2:24-cv-00058 (E.D. Tex. filed January 26, 2024),
>
> *Facet Technology Corp. v. HERE Global B.V.*, No. 2:24-cv-00269 (E.D. Tex. filed April 22, 2024),
>
> *Facet Technology Corp. v. TomTom International B.V.*, No. 1:24-cv-00111 (D.N.H. filed April 23, 2024), and
>
> *Mobileye Vision Technologies Ltd. v. Facet Technology Corp.*, No. 0:24-cv-04149 (D. Minn. filed November 7, 2024).

Pet. 57; Paper 4, 3–4.

Petitioner notes another petition for *inter partes* review it filed challenging a related patent owned by Patent Owner, namely IPR2024-01111 challenging U.S. Patent No. 9,671,328 B2. Pet. 57.

D. The Challenged Patent

The ’255 patent discloses “classifying different types of sheeting materials of road signs depicted in a videostream.” Ex. 1001, 1:30–32. The ’255 patent recognizes that “[t]he goal of using an automated image identification system to recognize road signs and traffic signs is well known.” *Id.* at 1:36–37. Although there are “existing techniques for determining retroreflectivity,” these techniques “require an operator to target individual signs from a known distance.” *Id.* at 4:11–13.

The ’255 patent purports to provide an improved “system for classifying different types of sheeting materials of road signs depicted in a videostream” that allows the user to “determine retroreflectivity without targeting individual signs” and to “automatically determine sheeting classification.” Ex. 1001, 3:45–47, 4:11–16. The system “employs several enhancements that are designed to improve the accuracy of evaluating

intensity measurements made over a view where the reflective surfaces are not individually targeted" and "neither the distance to the reflective surface or the normal vector to the reflective surface are known." *Id.* at 4:16–23. Figure 4 illustrates a typical configuration of a sensor suite within a capture vehicle and is reproduced below. *Id.* at 4:39–43, 10:7–10.

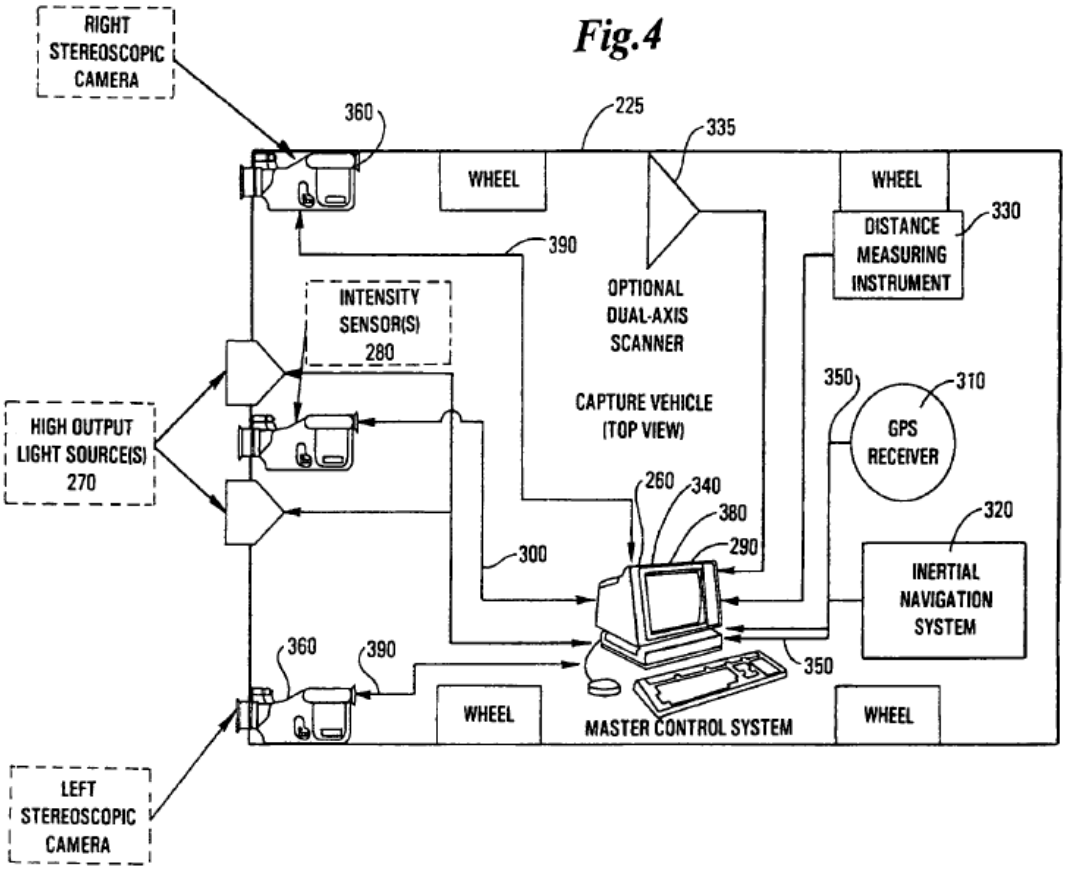

Figure 4 illustrates a preferred configuration of a sensor suite for use with a capture vehicle and the interconnections and couplings between the physical subcomponents of the system. *Id.* at 4:39–43. The system includes distance measuring instrument 330, GPS receiver 310, and inertial navigation system 320, which constitute the vehicle positioning subsystem. *Id.* at 10:10–13. The system includes high output light sources 270 and light

intensity sensors 280, which constitute the light intensity measurement subsystem. *Id.* at 10:17–19. This subsystem "make[s] it possible to gather on-the-fly information for a desired highway 150 to allow the computation of object of interest retroreflectivity." *Id.* at 10:19–23. Figure 4 also illustrates stereoscopic cameras 360 and digital imagery system 390 "that allows for the creation of objects of interest 460 and their associated attributes 465 during post-processing." *Id.* at 10:24–27.

In use, "[a] plurality of intensity measurements 300 are generated by the intensity measurement system 230 in response to the repeated strobing of the high output light source 270." Ex. 1001, 7:65–8:1. "A computer processor 450 identifies an object of interest 460 in a portion of the intensity frame 420 and determines the object of interest attributes 465 associated with that object of interest." *Id.* at 8:22–25. The processor uses "an intensity algorithm 490, a light intensity sensor characterization 275 and a look-up-table 475" to determine luminance values for the background and foreground of each object of interest. *Id.* at 8:38–41. The system compares the measured luminance values with the background and foreground colors and, based on a characterization of the light source wavelength, characterizes background retroreflectivity and foreground retroreflectivity. *Id.* at 8:42–48. The retroreflectivity values can be used to ensure the road signs and markers are reasonably visible to motorists. *Id.* at 18:16–21.

E. The Challenged Claim

Petitioner challenges claim 15 of the '255 patent. Pet. 2. Claim 15 depends from disclaimed claim 12. Claims 12 and 15 are reproduced below.

> 12. An automated method of assessing reflective surfaces disposed along a roadway comprising:

activating a light source as the light source is traversed along a roadway to illuminate an area that includes at least one reflective surface on a road marker, the road marker having a reflective characteristic;

determining a plurality of light intensity values with at least one intensity sensor directed to cover a field of view which includes at least a portion of the area illuminated by the light source; and

using a computer processing system configured to:

identify a portion of at least one light intensity value of the plurality of light intensity values associated with one of the at least one reflective surface of the road marker; and

analyze the portion of the at least one light intensity value of the plurality of light intensity values to determine an assessment for the reflective characteristic of the road marker.

Ex. 1001, 19:42–20:4.

15. The automated method of claim 12, further comprising determining a luminance value utilizing the plurality of light intensity values and a characterization profile of the at least one light intensity sensor.

Id. at 20:11–14.

F. Asserted Ground of Unpatentability

The Petition relies on the following prior art references:

Name	Reference	Exhibit
Gallagher	US 2002/0063638 A1, published May 30, 2002	1005
Lumia	*A Mobile System for Measuring Retroreflectance of Traffic Signs*, Optics, Illumination, and Image Sensing for Machine Vision V, published 1990	1014

Petitioner asserts the following ground of unpatentability, based on an evaluation of the claims that may be challenged in this proceeding:

Claim(s) Challenged	35 U.S.C. §	Reference(s)/Basis
15	103(a)[4]	Gallagher, Lumia

Pet. 2. Petitioner submits two declarations of Charles E. Thorpe, Ph.D. (Ex. 1003, "Thorpe Declaration"; Ex. 1030) in support of its contentions. Patent Owner submits a declaration of Nikolaos Papanikolopoulos, Ph.D. (Ex. 2023) in support of its contentions.

II. ANALYSIS

A. Principles of Law

1. Inter Partes *Review*

"In an [*inter partes* review], the petitioner has the burden from the onset to show with particularity why the patent it challenges is unpatentable." *Harmonic Inc. v. Avid Tech., Inc.*, 815 F.3d 1356, 1363 (Fed. Cir. 2016) (citing 35 U.S.C. § 312(a)(3) (requiring *inter partes* review petitions to identify "with particularity . . . the evidence that supports the grounds for the challenge to each claim")). Petitioner bears the burden of persuasion to prove unpatentability of each challenged claim by a preponderance of the evidence. 35 U.S.C. § 316(e). This burden never

[4] The application resulting in the '255 patent claims priority to a date prior to the date when the Leahy-Smith America Invents Act ("AIA"), Pub. L. No. 112–29, 125 Stat. 284 (2011), took effect. Thus, we refer to the pre-AIA version of section 103.

shifts to Patent Owner. *Dynamic Drinkware, LLC v. Nat'l Graphics, Inc.*, 800 F.3d 1375, 1378 (Fed. Cir. 2015).

2. Obviousness

A patent claim is unpatentable under 35 U.S.C. § 103(a) if the differences between the claimed subject matter and the prior art are such that the subject matter, as a whole, would have been obvious at the time the invention was made to a person having ordinary skill in the art to which the subject matter pertains. *KSR Int'l Co. v. Teleflex Inc.*, 550 U.S. 398, 406 (2007). The question of obviousness is resolved on the basis of underlying factual determinations including (1) the scope and content of the prior art, (2) any differences between the claimed subject matter and the prior art, (3) the level of skill in the art, and (4) when in evidence, any objective evidence of nonobviousness.[5] *Graham v. John Deere Co.*, 383 U.S. 1, 17–18 (1966).

B. Level of Ordinary Skill in the Art

The level of ordinary skill in the art is "a prism or lens" through which we view the prior art and the claimed invention. *Okajima v. Bourdeau*, 261 F.3d 1350, 1355 (Fed. Cir. 2001). The person of ordinary skill in the art is a hypothetical person presumed to have known the relevant art at the time of the invention. *In re GPAC Inc.*, 57 F.3d 1573, 1579 (Fed. Cir. 1995). In determining the level of ordinary skill in the art, we may consider certain factors, including: "(1) the educational level of the inventor; (2) type of problems encountered in the art; (3) prior art solutions to those problems;

[5] The parties have not directed us to any such objective evidence.

(4) rapidity with which innovations are made; (5) sophistication of the technology; and (6) educational level of active workers in the field." *Best Med. Int'l, Inc. v. Elekta Inc.*, 46 F.4th 1346, 1353 (Fed. Cir. 2022) (quoting *Daiichi Sankyo Co. v. Apotex, Inc.*, 501 F.3d 1254, 1256 (Fed. Cir. 2007)). "The patent's purpose can also be informative." *Id.*

Petitioner contends that a person having ordinary skill in the art at the time of the invention would have had "at least a bachelor's degree in mechanical engineering, electrical engineering, computer science, physics, or related discipline, and four years of experience in research, design, or development in computer vision systems." Pet. 7 (citing Ex. 1003 ¶ 33). Petitioner contends that "[h]igher levels of education may offset less experience and extensive experience can substitute for formal education." *Id.* (citing Ex. 1003 ¶ 33).

Patent Owner argues that Petitioner's proposes "an excessive level of ordinary skill in the art." PO Resp. 13. Patent Owner contends that an ordinarily skilled artisan "would more likely have two years of experience rather than four years." *Id.* (citing Ex. 2023 ¶ 57). However, Patent Owner contends, "none of the arguments presented herein would change if Petitioner's identification of the level of skill in the art were adopted instead." *Id.* at 13–14.

Petitioner replies that Patent Owner does not submit any evidence in support of its definition. Pet. Reply 25. Petitioner asserts that none of its arguments would change if Patent Owner's identification of the level of skill in the art were adopted. *Id.* at 26 (citing Ex. 1030 ¶¶ 22–24).

The parties disagree only on the length of experience an ordinarily skilled artisan would have, with Petitioner contending four years and Patent

Owner contending two years. As noted by Petitioner, Patent Owner's witness, Dr. Papanikolopoulos, does not provide an explanation for his opinion or support his definition of the level of ordinary skill with citations to evidence. *See* Ex. 2023 ¶ 57 ("In my opinion, [Petitioner's definition] is an excessive level of ordinary skill in the art, and I believe instead [an ordinarily skilled artisan] would more likely have two years of experience rather than four years."). On the other hand, Petitioner's witness, Dr. Thorpe, does provide an explanation for his opinion, explaining that his assertion that four years of experience is required is based on the state of the art, typical undergraduate curricula, and his supervision of doctoral students. Ex. 1030 ¶ 23.

Based on the arguments presented and the cited references, we find Petitioner's definition of the level of ordinary skill reasonable and for purposes of this Decision, adopt it as our own. We note that we would reach the same conclusions under either proposed standard.

C. Claim Construction

In an *inter partes* review, claims are construed using the same claim construction standard that would be used to construe the claims in a civil action under 35 U.S.C. § 282(b), including construing the claims in accordance with the ordinary and customary meaning of such claims as understood by one of ordinary skill in the art and the prosecution history pertaining to the patent. 37 C.F.R. § 42.100(b). "[T]he ordinary and customary meaning of a claim term is the meaning that the term would have to a person of ordinary skill in the art in question at the time of the invention" and "after reading the entire patent." *Phillips v. AWH Corp.*, 415

F.3d 1303, 1313, 1321 (Fed. Cir. 2005) (en banc). In addition to the specification and prosecution history, we also consider use of the terms in other claims and extrinsic evidence including expert and inventor testimony, dictionaries, and learned treatises, although extrinsic evidence is less significant than the intrinsic record. *Id.* at 1312–17. Usually, the specification is dispositive, and it is the single best guide to the meaning of a disputed term. *Id.* at 1315.

The specification may reveal a special definition given to a claim term by the patentee, or the specification may reveal an intentional disclaimer or disavowal of claim scope by the inventor. *Phillips*, 415 F.3d at 1316; *see also Hill-Rom Servs., Inc. v. Stryker Corp.*, 755 F.3d 1367, 1371 (Fed. Cir. 2014) (citing *Thorner v. Sony Computer Ent. Am. LLC*, 669 F.3d 1362, 1365 (Fed. Cir. 2012)) ("We depart from the plain and ordinary meaning of claim terms based on the specification in only two instances: lexicography and disavowal."). If an inventor acts as his or her own lexicographer, the definition must be set forth in the specification with reasonable clarity, deliberateness, and precision. *Renishaw PLC v. Marposs Societa' per Azioni*, 158 F.3d 1243, 1249 (Fed. Cir. 1998). A disavowal, if any, can be effectuated by language in the specification or the prosecution history. *Poly-America, L.P. v. API Indus., Inc.*, 839 F.3d 1131, 1136 (Fed. Cir. 2016). "In either case, the standard for disavowal is exacting, requiring clear and unequivocal evidence that the claimed invention includes or does not include a particular feature." *Id.* "Ambiguous language cannot support disavowal." *Id.* (citing *Omega Eng'g, Inc. v. Raytek Corp.*, 334 F.3d 1314, 1324 (Fed. Cir. 2003)).

"The Board is required to construe 'only those terms . . . that are in controversy, and only to the extent necessary to resolve the controversy.'" *Realtime Data, LLC v. Iancu*, 912 F.3d 1368, 1375 (Fed. Cir. 2019) (alteration in original) (quoting *Vivid Techs., Inc. v. Am. Sci. & Eng'g, Inc.*, 200 F.3d 795, 803 (Fed. Cir. 1999)).

For purposes of this Decision, we determine that no construction of any term is necessary.

D. Overview of the Asserted Prior Art

1. Gallagher

Gallagher discloses "a method and apparatus for assessing the integrity of road markers and markings." Ex. 1005 ¶ 1. Figure 1 illustrates the reflectivity measuring apparatus and is reproduced below.

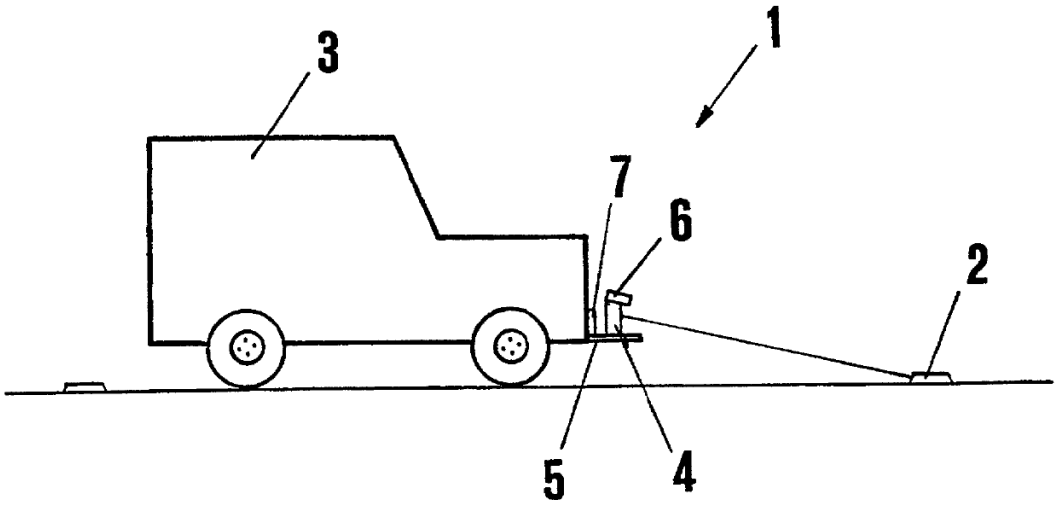

Figure 1

Figure 1 illustrates a side view of reflectivity measuring apparatus 1. *Id.* ¶¶ 26, 31. The apparatus is mounted on vehicle 3 and is designed to measure the reflectivity of road markings 2 when travelling at speeds of up

to about 100 kph. *Id.* ¶ 32. The apparatus includes light source 4 mounted on platform 5, light sensor 6 (which may be provided as an array of sensors in module 6a), and computer 8. *Id.* ¶¶ 35, 38, 45–46; *see also id.* Fig. 3 (illustrating a block diagram of the apparatus components). The apparatus can be used to assess a variety of road marking types, such as raised pavement markers. *Id.* ¶¶ 2, 33.

> In operation, an operator in the vehicle 3 initiates the measurement process by sending a signal via the computer 8 to activate the light control relay 10. . . . The relay 10 switches power from the power supply 12 to the light source 4. The light source 4 subsequently illuminates a reflective surface of a marker 2 and the reflected light is detected by one or a number of the light sensors 6 in the module 6a which has been aligned to detect light from a particular area of road.

Id. ¶ 46. The computer determines the reflectance level of each road marker and determines whether it meets a predetermined minimum acceptable reflectance level. *Id.* ¶¶ 67–68. Any road marker that does not meet this level is tagged to identify it for replacement. *Id.* ¶ 68.

2. Lumia

Lumia recognizes the need "to evaluate the nighttime visibility of existing traffic signs and provide data for making decisions on sign replacement" and discloses "[a] mobile system . . . which can measure the average retroreflectance of sign legend and background from a moving vehicle during daylight hours." Ex. 1014, 15.[6] "This system uses a video

[6] Petitioner cites to the original pagination rather than the added exhibit pagination. *See, e.g.*, Pet. 44. Patent Owner cites to both the added exhibit pagination (*see, e.g.*, Prelim. Resp. 8) and the original pagination (*see, e.g.*,

camera to acquire sign images, a xenon flash as a source of light, a personal computer to analyze the sign images, and a laser rangefinder to measure the distance to the sign." *Id.* The system calculates retroreflectance as a function of "the absolute brightness of the [sign] for a given amount of incident illumination on the [sign]." *Id.* at 16. The incident illumination is measured with an illumination meter or it is inferred based on the intensity of the light source and the distance between the light source and the sign. *Id.* The light source's intensity is measured in a laboratory setting and the distance is measure with a laser rangefinder. *Id.* at 15–16. The reflected luminance of the sign is measured with a luminance meter, such as a video camera. *Id.* at 16.

Lumia's system creates a histogram from the measurements, illustrated in Figure 3(b) reproduced below.

Prelim. Sur-reply 1). For consistency, we cite to the original pagination and, where needed, convert Patent Owner's citations to the original pagination.

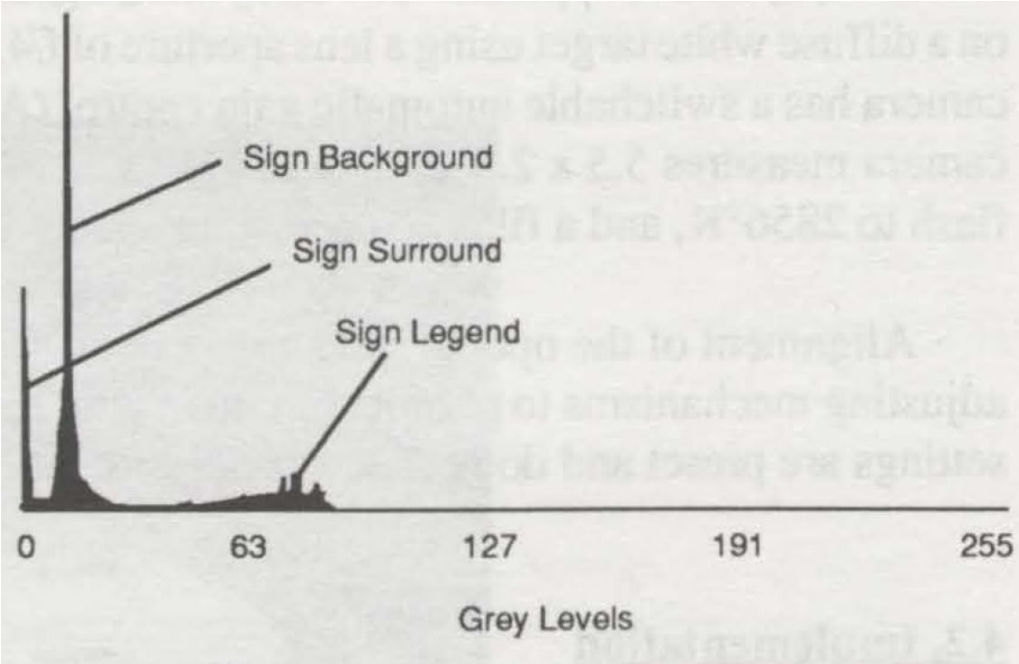

Figure 3(b). Related histogram of image of figure 3(a).

Figure 3(b) illustrates a histogram of measured retroreflectance data, "plotted as relative number of image points versus reflected light intensity (camera gray levels)." Ex. 1014, 16. The largest peak corresponds to the sign background, which has a larger background area that the sign legend. *Id.* The smaller peak corresponds to the sign legend. *Id.* Intensity levels corresponding to the areas surrounding the sign generally do not exceed four gray levels, so they are easily excluded. *Id.* The intensity levels of the peaks are averaged to obtain retroreflectivities for the sign background and legend. *Id.* The system is calibrated using a sheeting material with known retroreflectance to compute a scale factor to convert the gray levels to retroreflectance values. *Id.* at 24.

E. Petitioner's Challenge

Petitioner argues that claim 15 would have been obvious in view of Gallagher and Lumia. Pet. 44–47. In support of its showing, Petitioner relies upon the Thorpe Declaration. *Id.* (citing Ex. 1003). We have reviewed the parties' briefs and the evidence of record and determine that, for the reasons explained below, Petitioner has failed to show, by a preponderance of the evidence, that claim 15 would have been obvious in view of Gallagher and Lumia.

Claim 15 recites "[t]he automated method of claim 12, further comprising determining a luminance value utilizing the plurality of light intensity values and a characterization profile of the at least one light intensity sensor." Ex. 1001, 20:11–14. Petitioner relies on Gallagher to disclose or teach all of the recitations of parent claim 12, including mapping Gallagher's array of light sensors to the recited intensity sensor, and relies on Lumia to teach the recitations of claim 15. Pet. 27–35, 44–47. Petitioner argues that Lumia's video camera divides its field of view ("FOV") into multiple areas and acts as a luminance meter for each area. *Id.* at 44 (citing Ex. 1014, 16; Ex. 1003 ¶ 114). Petitioner argues that, when Lumia's "system is 'properly calibrated,' the average intensity value of each area in the FOV of similar intensity 'corresponds to the average luminance.'" *Id.* at 44–45 (citing Ex. 1014, 16; Ex. 1003 ¶ 114). Petitioner notes that Lumia discloses creating a histogram of measured values and argues that the "histogram can be used to identify and average legend and background values, which 'correspond[] to the average luminance' of the legend and background, respectively." *Id.* at 45 (alteration in original) (citing Ex. 1014, 15–17; Ex. 1003 ¶ 114). Petitioner argues that an ordinarily skilled artisan

"would have understood Lumia's calibration to disclose a characterization profile that relates the light intensity values of the video camera (light intensity sensor) to corresponding luminance values." *Id.* (citing Ex. 1003 ¶ 115).

Petitioner argues that it would have been obvious to an ordinarily skilled artisan "to implement Lumia's determining a luminance value utilizing the plurality of light intensity values and a characterization profile of the at least one light intensity sensor to allow Gallagher's apparatus to calculate the retroreflectivity of road markers." Pet. 46. Petitioner argues that such an artisan "would have been motivated to do so because, as was well known at the time, several road authorities specified minimum retroreflectivity values for road markings along a roadway," and the modification would allow Gallagher's apparatus "to identify and tag any markers 'that do not meet the predetermined minimum acceptable reflectance level.'" *Id.* (citing Ex. 1003 ¶ 116; Ex. 1005 ¶¶ 49, 77; Ex. 1019, 6, 8–11).

Patent Owner argues that Petitioner fails to explain adequately why an ordinarily skilled artisan would incorporate Lumia's teachings into Gallagher's apparatus for several reasons. PO Resp. 23–41. Below, we discuss one such reason that we find dispositive.

Patent Owner argues that Petitioner's rationale for combining the teachings of Gallagher and Lumia "fails because Gallagher already teaches determining whether road markers meet published standards for minimum retroreflectivity levels." PO Resp. 34 (citing Ex. 2023 ¶ 98).

Petitioner replies by arguing that, rather than determining "the coefficient of retroreflectivity," Gallagher determines the "coefficient of

luminous intensity." Pet. Reply 20 (emphasis omitted) (citing Ex. 1005 ¶ 67, Fig. 5; Ex. 1003 ¶¶ 89, 116–117). Petitioner argues that Lumia determines the coefficient of retroreflection and that calculation would be beneficial "to allow Gallagher's apparatus to calculate the retroreflectivity of road markers." *Id.* at 21 (citing Pet. 44–47; Ex. 1014, 16; Ex. 2023 ¶¶ 71 n.2, 89).

Patent Owner replies that Petitioner improperly makes new arguments in its Reply and reiterates that "Gallagher already discloses identifying whether markers comply with minimum acceptable retroreflectance standards specified by minimum retroreflectivity, and thus adding Lumia would not provide any benefit to Gallagher in achieving that goal." PO Sur-reply 3–4. Patent Owner argues that, "[t]o the extent that Petitioner is suggesting now that Gallagher does not measure retroreflectivity, that is also blatantly inconsistent with the Petition." *Id.* at 4 (citing Pet. 41; Pet. Reply 21).

We agree with Patent Owner that Petitioner has not articulated persuasive reasoning for combining the teachings of Gallagher and Lumia. Petitioner argues that implementing Lumia's teaching of determining the luminance of traffic signs in Gallagher's system would allow Gallagher's system to calculate the retroreflectivity of road markers as a means of identifying any markers that do not meet minimum acceptable reflectance levels for countries that require a minimum retroreflectivity level for road markers. Pet. 46 (citing Ex. 1003 ¶ 116; Ex. 1005 ¶¶ 49, 77; Ex. 1019, 6, 8–11).[7] However, Gallagher already discloses determining whether the

[7] Petitioner and Dr. Thorpe cite to the original pagination of Exhibit 1019 rather than the added exhibit pagination.

reflectance level of each road marker meets a predetermined minimum acceptable reflectance level and tagging those road markers that do not meet the minimum acceptable reflectance level to identify them for replacement. *See, e.g.*, Ex. 1005 ¶¶ 3, 67–68; *see also id.* ¶¶ 12–13, 18, 21, 49, 51, 76, 79, Fig. 5. Indeed, both Petitioner and Dr. Thorpe describe Gallagher's system as ensuring that road markers meet minimum retroreflectivity standards: "Gallagher's apparatus tests 'road markings and road markers such as, for example, road signs and posts, reflective painted lines whether continuous or broken, and . . . raised pavement markers' '*to ensure they continue to meet minimum standards of reflectivity/retroreflectivity*.'" Pet. 9 (alteration in original) (emphasis added) (citing Ex. 1005 ¶¶ 3, 6, 31–33); Ex. 1003 ¶ 55 (alteration in original) (emphasis added) (citing Ex. 1005 ¶¶ 3, 6, 31–33). Thus, we agree with Patent Owner that Petitioner has not identified persuasively why an ordinarily skilled artisan would have modified Gallagher's system to include Lumia's process for measuring retroreflectivity of traffic signs.

In its Reply, Petitioner argues that Gallagher's system measures the coefficient of luminous intensity rather than the coefficient of retroreflectivity, and Lumia teaches how to calculate retroreflectivity based on the coefficient of luminance intensity. Pet. Reply 20–21. During the hearing, counsel for Petitioner clarified that this reliance on Lumia entails using the equations disclosed in Lumia without altering Gallagher's hardware. Tr. 27:18–29:24. During his deposition , Dr. Thorpe confirmed that this obviousness theory relies only on Lumia's equations. *See* Ex. 2025, 60:5–65:2. This is an improper new argument. *See, e.g.*, *Henny Penny Corp. v. Frymaster LLC*, 938 F.3d 1324, 1330–31 (Fed. Cir. 2019) ("[A]n

IPR petitioner may not raise in reply 'an entirely new rationale' for why a claim would have been obvious."). Notably, this new obviousness theory appears to stem from Patent Owner's witness, Dr. Papanikolopoulos, noting differences in Gallagher's and Lumia's disclosures. *See* Pet. Reply 21 (citing Ex. 2023 ¶¶ 71 n.2, 89).

Even considering Petitioner's new theory, we find it unpersuasive because Petitioner does not explain adequately how the "determining a luminance value" recitation is met. Per Petitioner, Gallagher measures the coefficient of luminous intensity, but Petitioner does not identify a "luminance value" as recited in claim 15. Dr. Papanikolopoulos testifies that the coefficient of luminous intensity is *not* a luminance value: "As is well established, coefficient of luminous intensity—which is what Gallagher calculates—is a measurement of *retroreflectivity* (usually expressed in units of candelas, or millicandelas, per lux per square meter, i.e., cd/lx/m^2), not luminance (usually expressed in candelas per square meter, i.e., cd/m^2). Ex. 2023 ¶ 91. Petitioner's witness, Dr. Thorpe, does not contest this testimony. *See, e.g.*, Ex. 1030 ¶ 35. Thus, Petitioner's new theory is unpersuasive.

Furthermore, we disagree with Petitioner's assertion that, in the Institution Decision, we found an argument "that the combination purportedly lacks a motivation to determine a luminance value" to be "unavailing." *See* Pet. Reply 16 (citing PO Resp. 24–25; Inst. Dec. 27). At the cited portion of the Institution Decision, we addressed Patent Owner's argument "that Lumia does not determine any luminance value," but we did not address Petitioner's asserted rationale to combine the teachings of Gallagher and Lumia. Inst. Dec. 27.

For the foregoing reasons, Petitioner has not shown, by a preponderance of the evidence, that claim 15 would have been obvious in view of Gallagher and Lumia.

III. PETITIONER'S MOTION TO EXCLUDE EVIDENCE

The party moving to exclude evidence bears the burden of proof to establish that it is entitled to the relief requested—namely, that the material sought to be excluded is inadmissible under the Federal Rules of Evidence. *See* 37 C.F.R. §§ 42.20(c), 42.62(a). For the reasons discussed below, Petitioner's Motion to Exclude is *dismissed*.

Petitioner filed a Motion to Exclude Exhibits 2009–2012 and 2014 ("the Disputed Exhibits"), asserting that they are not relevant. Mot. Exc. 1. Petitioner asserts that Patent Owner relies on the Disputed Exhibits "as extrinsic evidence to support its claim construction for the disputed term, 'characterization profile.'" *Id.* (citing Prelim. Resp. 7–8, 12; PO Resp. 15–17). Petitioner argues that the Disputed Exhibits are not relevant "they were purportedly published long after the alleged priority date of the '255 patent," and, thus, are not relevant to an ordinarily skilled artisan's understanding "at the time of the alleged invention." *Id.* at 1–2 (citing Inst. Dec. 9 n.2; Ex. 2023 ¶¶ 56, 59).

Patent Owner replies that post-priority date references are not categorically barred from consideration. Opp. Exc. 1–2. Patent Owner argues that "disputes regarding the pertinence of extrinsic evidence should go to the weight rather than the admissibility of such evidence." *Id.* at 3. Patent Owner asserts that "Petitioner has presented no evidence either

showing or attempting to show a change in the meaning of the claim terms." *Id.* at 5.

Petitioner replies that "exclusion is warranted because there is no indication the cited portions of the sources reflect a skilled artisan's understanding of the corresponding terms at the time of the alleged invention." Reply Exc. 1.

We do not rely on the materials Petitioner seeks to exclude in making our conclusions in this proceeding. Even if we were to rely on such materials, we would still find that Petitioner has failed to show, by a preponderance of the evidence, that the challenged claim is unpatentable. Accordingly, we *dismiss* as moot Petitioner's Motion to Exclude.

IV. CONCLUSION

Based on the evidence presented with the Petition, the evidence introduced during the trial, and the parties' respective arguments, Petitioner has failed to show, by a preponderance of the evidence, that claim 15 of the '255 patent is unpatentable. In summary,[8]

Claim(s)	35 U.S.C. §	Reference(s)/ Basis	Claims Shown Unpatentable	Claims Not Shown Unpatentable
15	103(a)	Gallagher, Lumia		15

[8] Claims 12–14 and 17–23 have been disclaimed and thus not designated as "Shown Unpatentable" or "Not Shown Unpatentable" in this table.

V. ORDER

Accordingly, it is:

ORDERED that claim 15 of the '255 patent has not been shown to be unpatentable;

FURTHER ORDERED that Petitioner's Motion to Exclude is *dismissed* as moot; and

FURTHER ORDERED that, because this is a final written decision, parties to the proceeding seeking judicial review of the decision must comply with the notice and service requirements of 37 C.F.R. § 90.2.

For PETITIONER MOBILEYE GLOBAL, INC.:

Cory C. Bell
Robert K. High
Benjamin R. Schlesinger
Wyatt L. Bazrod
Gerson S. Panitch
FINNEGAN, HENDERSON, FARABOW, GARRETT & DUNNER, LLP
cory.bell@finnegan.com
robert.high@finnegan.com
benjamin.schlesinger@finnegan.com
wyatt.bazrod@finnegan.com
gerson.panitch@finnegan.com

For PETITIONER ZF ACTIVE SAFETY AND ELECTRONICS US LLC:

John R. Hutchins
Paul T. Qualey
BANNER & WITCOFF, LTD.
jhutchins@bannerwitcoff.com
pqualey@bannerwitcoff.com
ZFIPRService@bannerwitcoff.com

For PATENT OWNER:

Michael D. Saunders
Bryan D. Atkinson
PRINCE LOBEL TYE LLP
msaunders@princelobel.com
batkinson@princelobel.com