US006997775B2

(12) **United States Patent**
Jagaric et al.

(10) **Patent No.: US 6,997,775 B2**
(45) **Date of Patent: *Feb. 14, 2006**

(54) **BRA PAD CONSTRUCTION**

(75) Inventors: **Andrea Jagaric**, New York, NY (US); **Nathalie Martinet**, New York, NY (US); **Judith Grigor**, New York, NY (US); **Bull Lau**, Kwai Chung (HK)

(73) Assignee: **Victoria's Secret Stores, Inc.**, New York, NY (US)

(*) Notice: Subject to any disclaimer, the term of this patent is extended or adjusted under 35 U.S.C. 154(b) by 0 days.

This patent is subject to a terminal disclaimer.

(21) Appl. No.: **11/054,185**

(22) Filed: **Feb. 9, 2005**

(65) **Prior Publication Data**

US 2005/0208875 A1 Sep. 22, 2005

Related U.S. Application Data

(63) Continuation-in-part of application No. 10/911,269, filed on Aug. 4, 2004, and a continuation-in-part of application No. 10/804,403, filed on Mar. 19, 2004.

(51) **Int. Cl.**
A41C 3/00 (2006.01)

(52) **U.S. Cl.** **450/57**; 450/39; 2/267

(58) **Field of Classification Search** 450/39, 450/38, 54–57; 2/455, 267, 268, 463, 92; 623/7, 8; 156/245; 264/257, 258, 291, 292, 264/294, 145, 148, 152–157, 160, 163, 554
See application file for complete search history.

(56) **References Cited**

U.S. PATENT DOCUMENTS

2,664,571	A *	1/1954	Kempel	450/57
2,834,352	A *	5/1958	Murry	450/57
2,867,818	A *	1/1959	Creamer	623/7
2,896,631	A *	7/1959	Wilfred	450/51
3,620,222	A *	11/1971	Lester	450/57
4,008,029	A *	2/1977	Shokite	425/157
4,080,416	A *	3/1978	Howard	264/258
4,250,137	A *	2/1981	Riedler	264/554
6,042,608	A *	3/2000	Ishikawa et al.	623/7
6,881,123	B1 *	4/2005	Klakauskas	450/39

* cited by examiner

Primary Examiner—Gloria M. Hale
(74) *Attorney, Agent, or Firm*—Colucci & Umans; Peter C. Michalos; Angelo Notaro

(57) **ABSTRACT**

A method of manufacturing a bra pad having a thicker summit area, as well as the pad itself, includes holding a sheet of resilient and formable material of uniform thickness, such as thermoplastic foam, and forming the sheet to have a graduated thicker summit area corresponding to each summit of a bra or bra-like garment for including the pad, and a surrounding thinner area. Each pad thus has a thicker summit area for extending over the summits of the breasts.

36 Claims, 10 Drawing Sheets

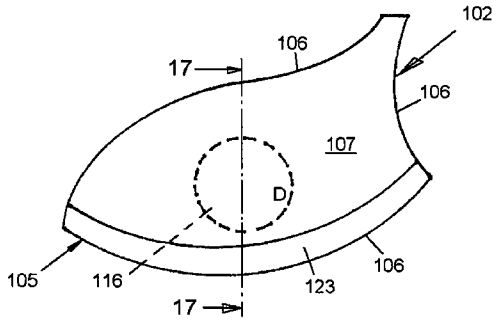

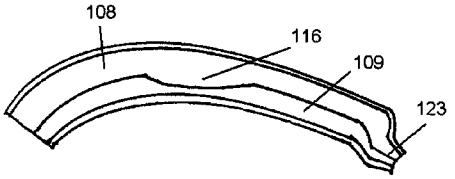

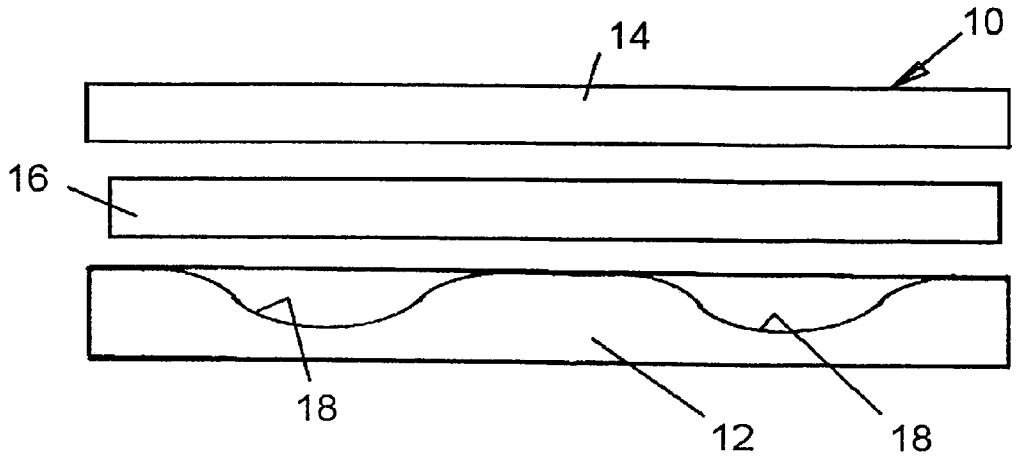

FIG. 1

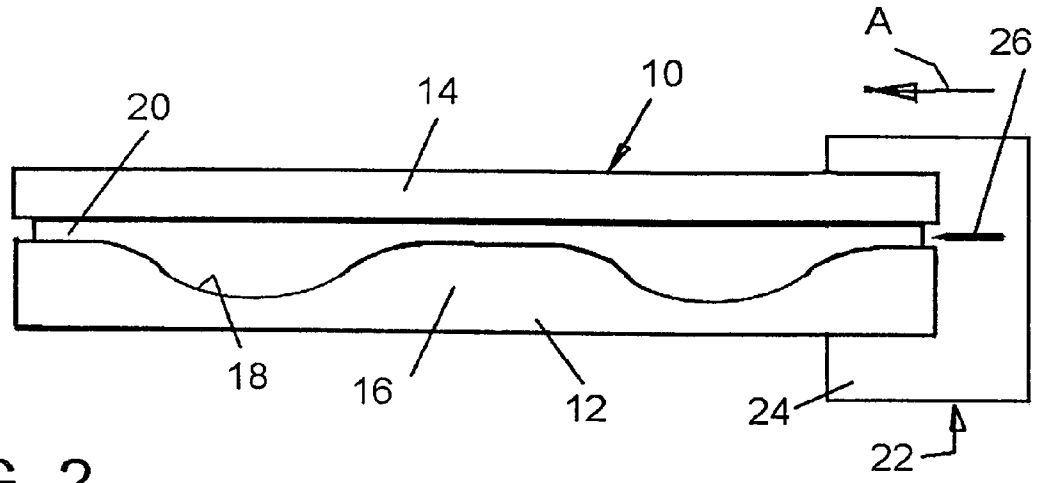

FIG. 2

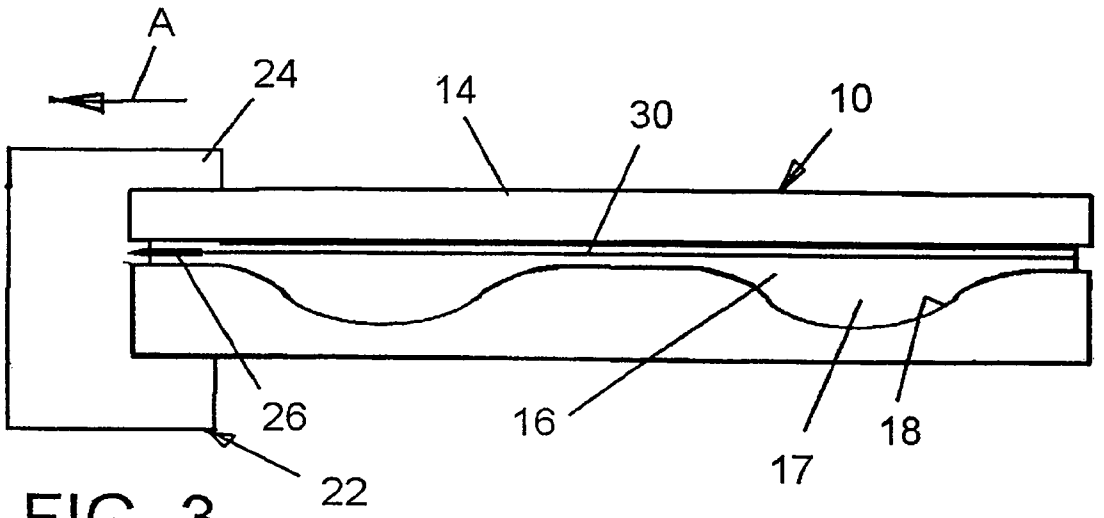

FIG. 3

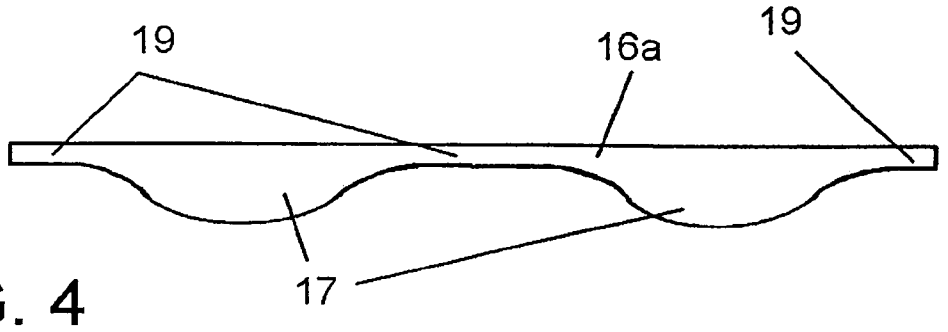

FIG. 4

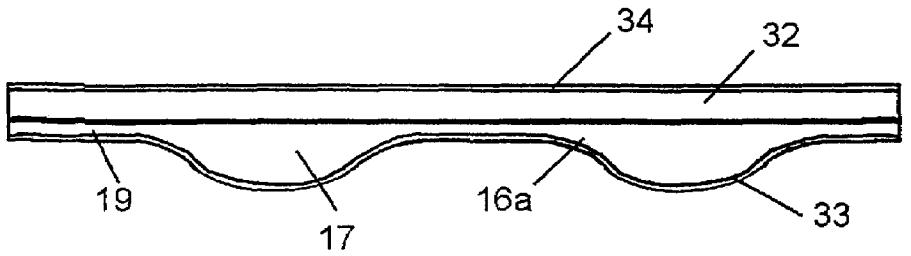

FIG. 5

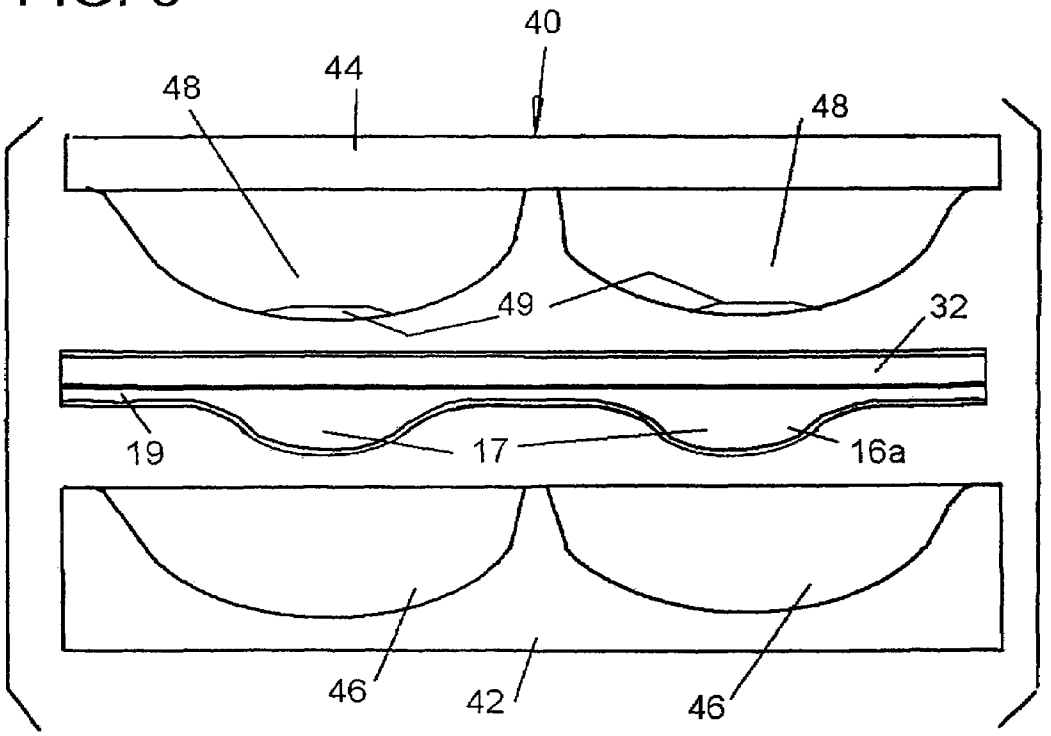

FIG. 6

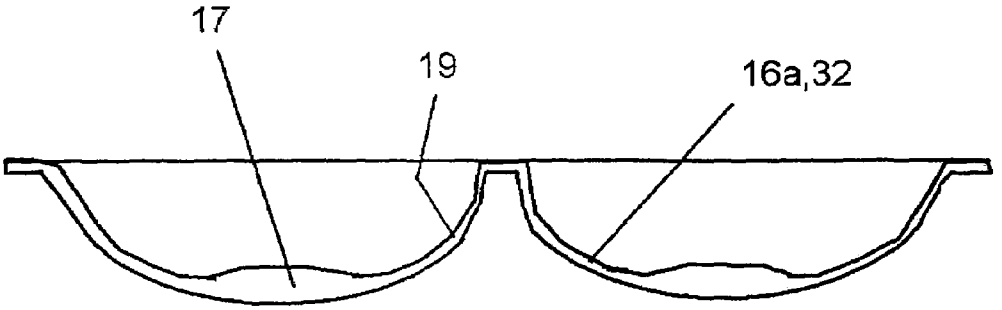

FIG. 7

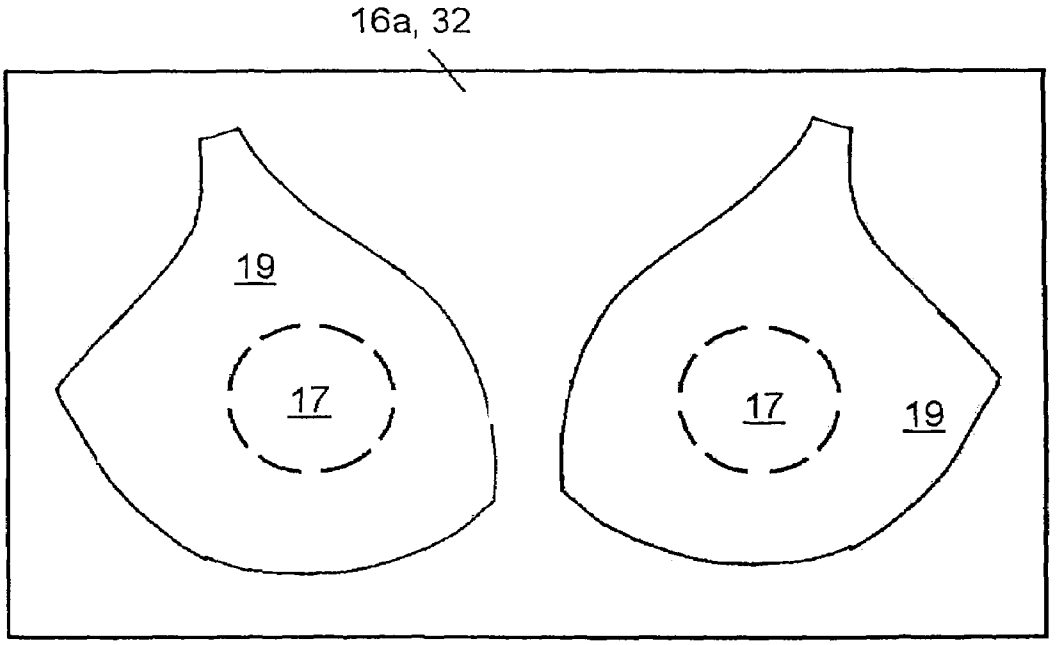

FIG. 8

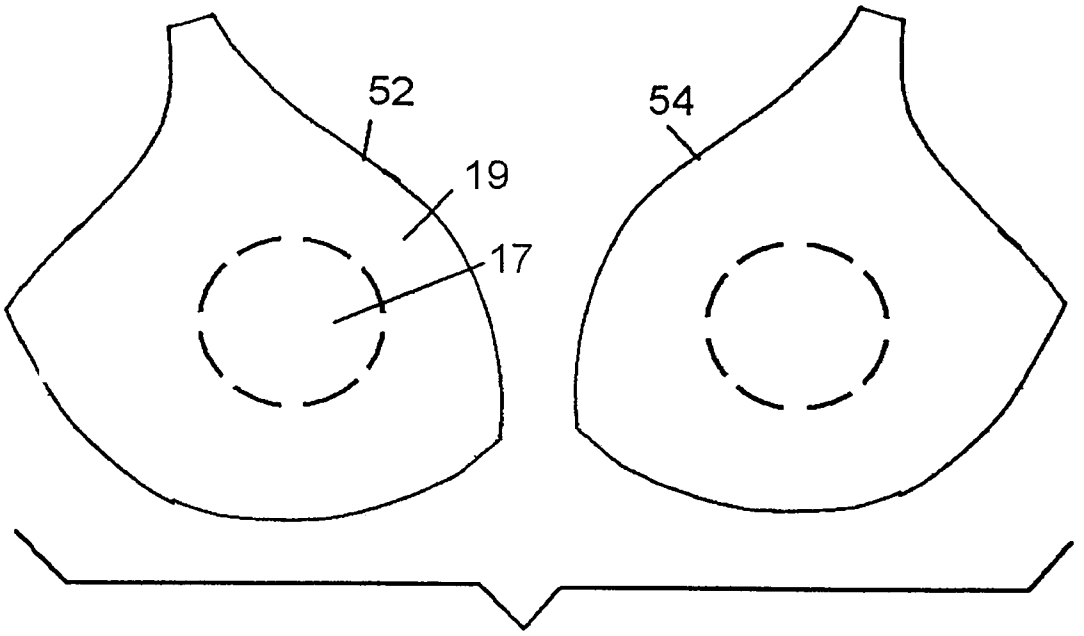

FIG. 9

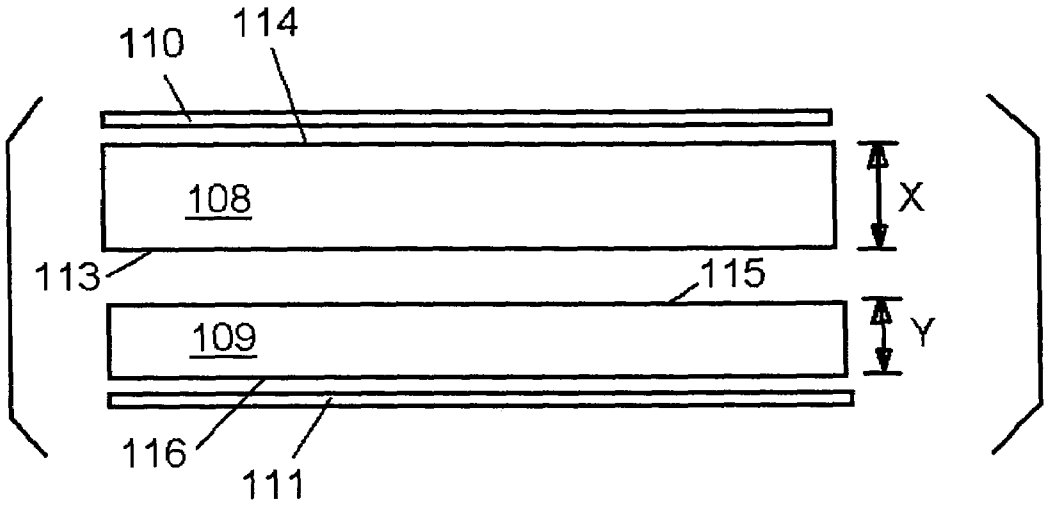

FIG. 10

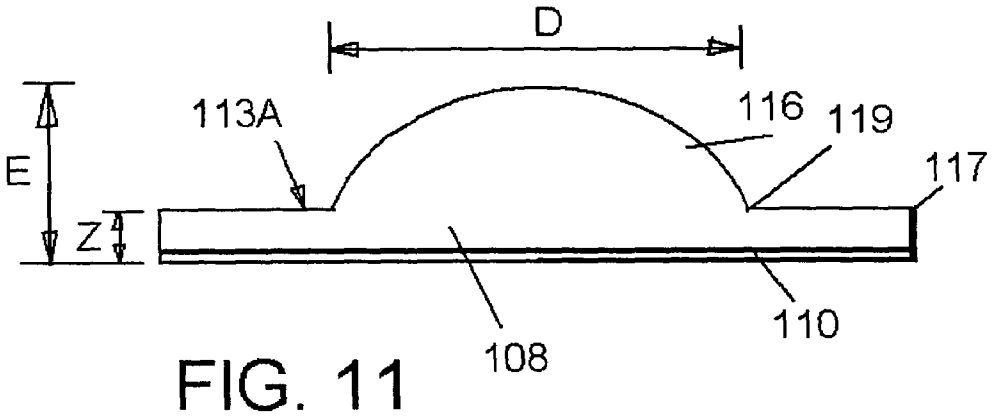

FIG. 11

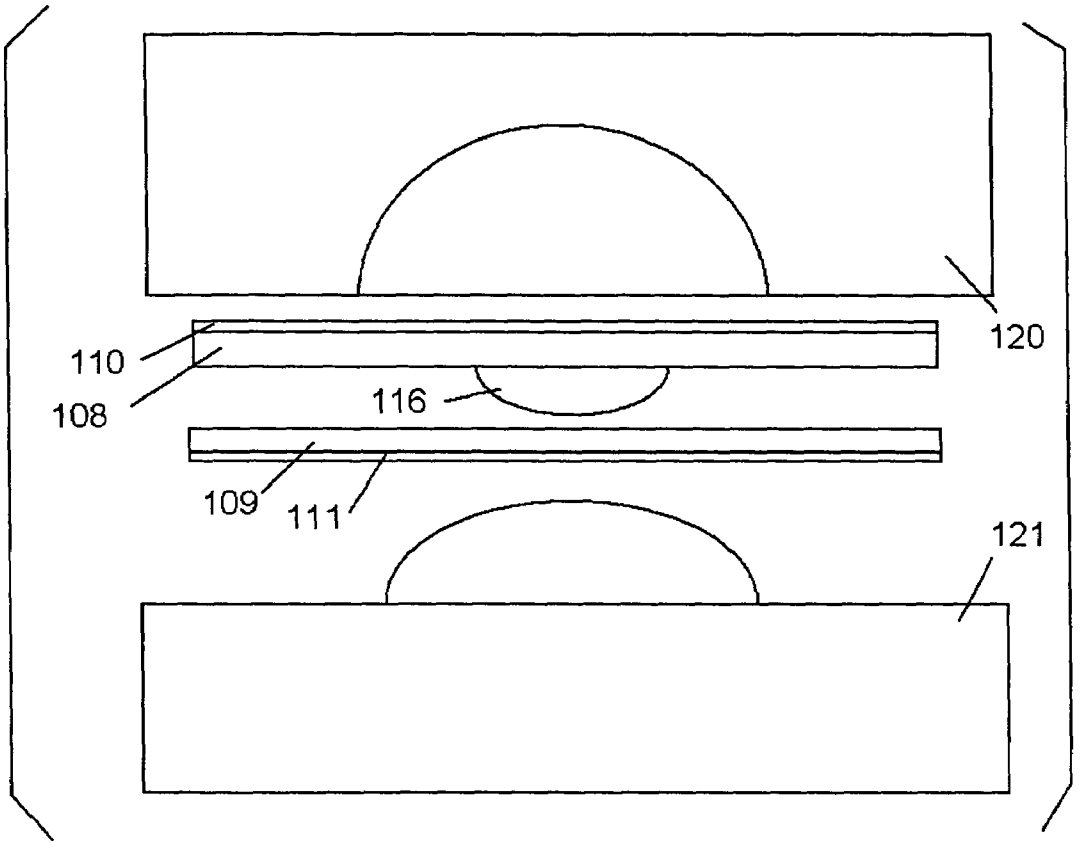

FIG. 12

FIG. 13

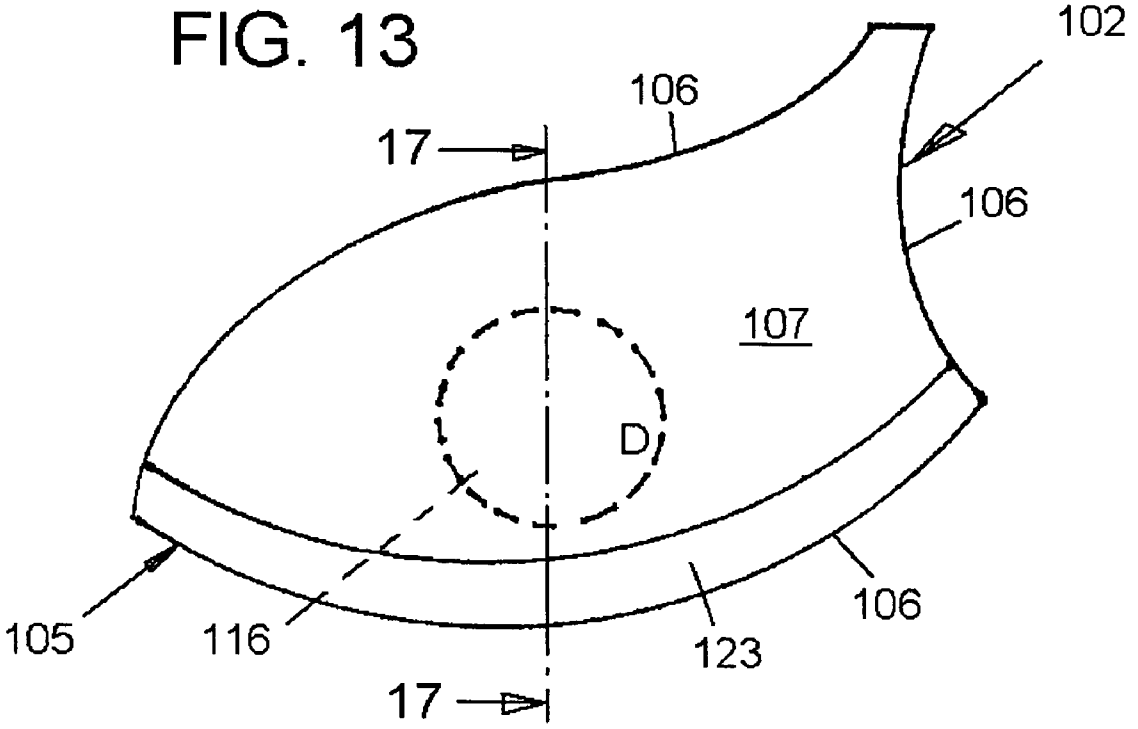
102
106
17
106
107
D
105
116
123
106
17

FIG. 16

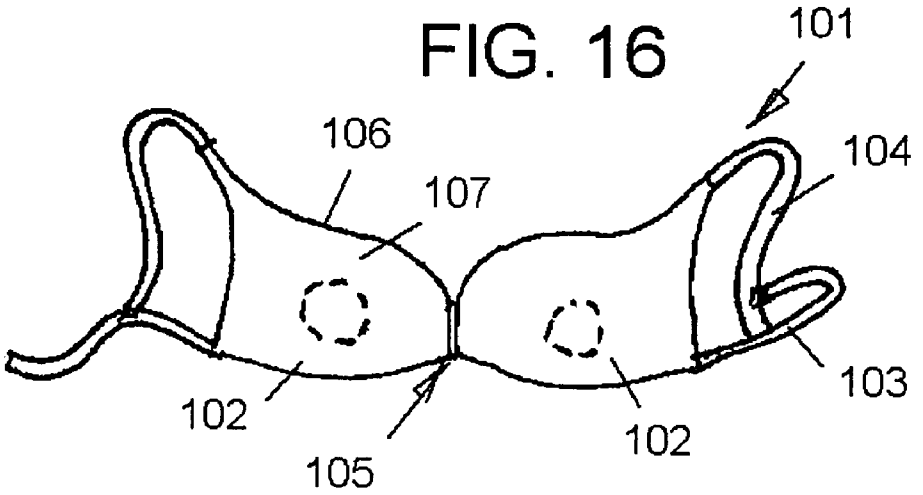
101
106
104
107
103
102
102
105

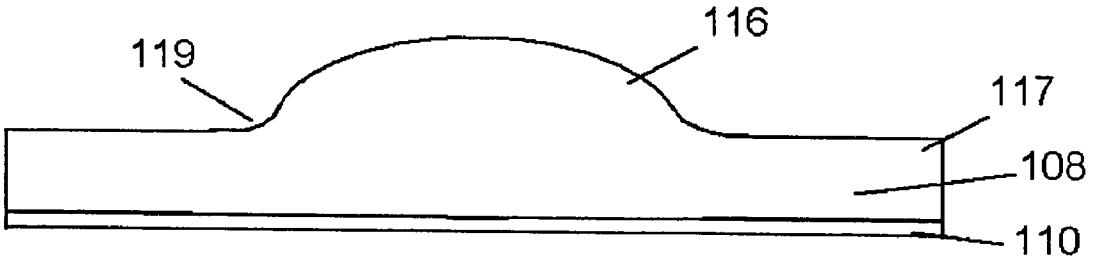

FIG. 14

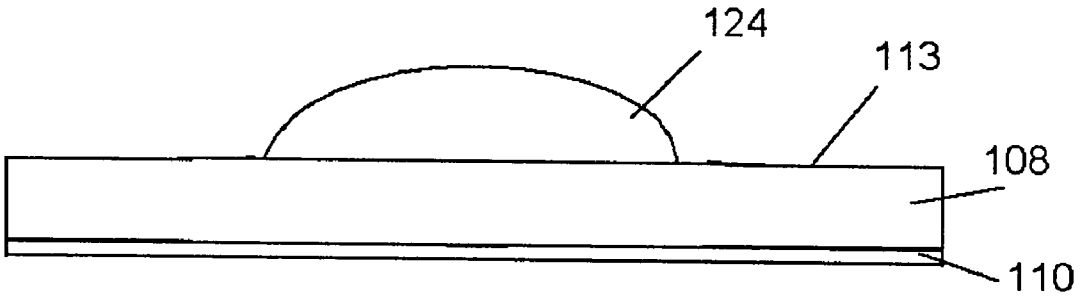

FIG. 15

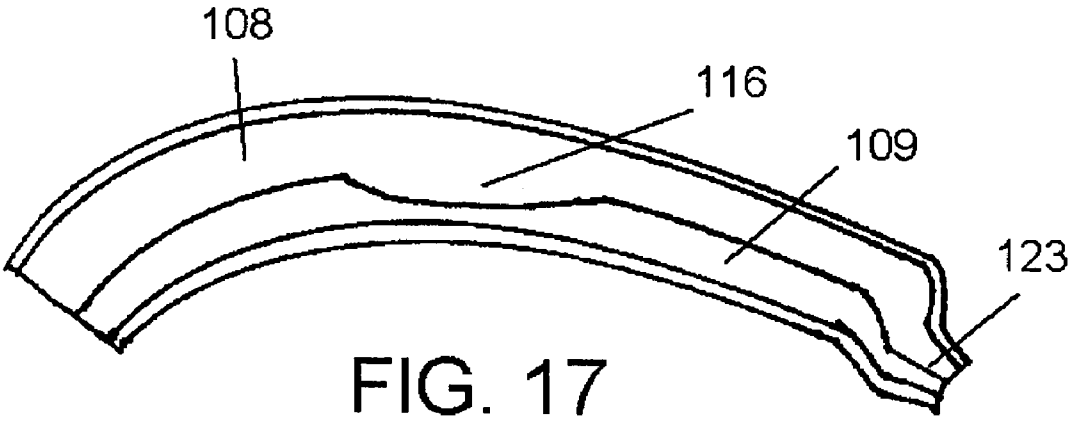

FIG. 17

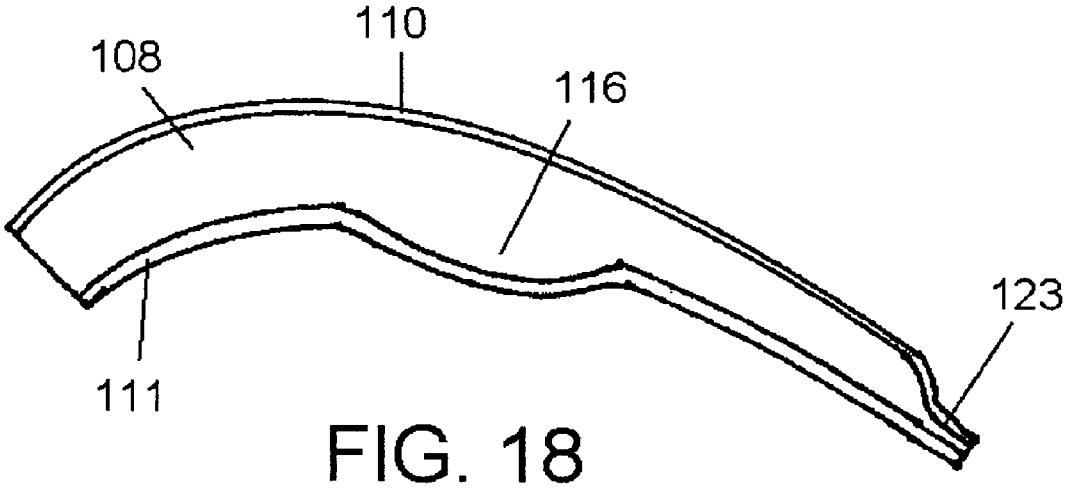

FIG. 18

BRA PAD CONSTRUCTION

CROSS-REFERENCE TO RELATED APPLICATIONS

This is a continuation-in-part of application Ser. No. 10/804,403 filed Mar. 19, 2004 entitled A BRASSIERE AND RELATED BREAST CUP CONSTRUCTION, and application Ser. No. 10/911,269 filed Aug. 4, 2004 entitled PADS HAVING A CENTRAL SUMMIT FOR BRAS AND THE LIKE, both of which are incorporated here by reference.

FIELD AND BACKGROUND OF THE INVENTION

The present invention relates generally to the field of bras and related garments, and in particular to a new and useful method and pad product having a thicker central summit area for use in bras, camisoles, slips, swimsuits or any other breast covering garment where padding is desired.

It is known to provide resilient pads in bras to accentuate the figure. Padded bras are not always desirable, however. Bras without pads are also known but these have limited ability to enhance the figure.

Recently, materials for the manufacture of brassieres have been developed that allow for more convenient manufacture of a brassiere.

Traditionally the cup forms of a brassiere have, in order to introduce a three dimensional cup shape therein, consisted of several panels which have been sewn or otherwise affixed together. With the advent of moldable synthetic materials such as foam and synthetic fabric materials, cup forms are now moldable into a single panel of material or assembly of panels of materials to define the three dimensional cup form. The ability to mold material to define a cup form of a desirable shape has allowed the manufacturing process to be simplified or accelerated. As well as providing support to a breast of a wearer, the cup forms are often also required for additional benefits to the wearer.

Some women prefer that a brassiere conceals some if not all of the regions of the breasts. For modesty, it is desirable that the nipples of a wearer at all times remain unnoticeable from the exterior of the brassiere and any over garment that may be worn by the wearer. Molded cup forms of brassieres that are currently available generally do not provide for any enhancement to the cup form for such purpose. Molded cup forms are normally of a substantially even thickness across the body of the cup and while it may be possible to increase the thickness of the cup in order to thereby reduce the visibility of the nipples of a wearer to the exterior of the brassiere, such increasing thickness may add to the cost of manufacture of the brassiere. Furthermore it is undesirable for increased thickness of the brassiere to exist at its perimeter if the presence of the brassier entirely, is to be as unobtrusive as possible. It is desirable for the perimeter of the bra to be relatively thin so that it has the appearance of feathering in with the skin of the wearer.

The patent prior art contains various relevant examples.

U.S. Pat. No. 4,013,750 discloses a method for making brasserie pad pre-forms which can produce a bra pad having a thicker central region than its outer regions. A mold apparatus is utilized which produces a substantially conical pad of polyester fibers with a summit which is thicker than the periphery of the conical pad. Also see U.S. Pat. No. 3,947,207.

Other patents of interest to the present invention are:

U.S. Pat. No.	Inventor(s)
2,507,543	Prager
2,565,400	Skeoch
2,616,093	Talalay
2,627,368	Jantzen
2,702,769	Alderfer
2,845,974	Ashton et al.
3,164,655	Howard et al.
3,186,271	Kaiser
3,311,007	McGee
3,417,755	Howard et al.
3,464,418	Silverman
3,502,083	Howard et al.
3,800,650	Schroder
4,351,211	Azzolini
5,017,174	Gowrylow
5,299,483	Ber-Fong.

U.S. Pat. No. 2,627,368 to Jantzen discloses a method of making curved pad filler in which a mold is provided with a concave part for receiving a part of a blank of material. A means are provided for pushing or pressing the blank into the concave part of the mold. A sharp moving knife is passed between the mold and the pressing element, resulting in a curved shoulder pad filler and uniformly tapered portions extending from the thick end to a feathered edge.

U.S. Pat. No. 3,186,271 to Kaiser discloses an apparatus and method for producing shaped articles consisting of foam such as sponges and cushions.

Neither the Jantzen nor the Kaiser patents teach or suggest a sheet of material having a pair of thicker areas positioned so that they correspond to the location where the central summit of the bra pad will be when it is completed.

U.S. Pat. Nos. 3,164,655, 3,417,755 and 3,502,083 to Howard et al. disclose molding of a blank to give it a desired shape and contour but fail to teach or suggest forming a foam sheet of material having a pair of thicker areas positioned so that their position corresponds to the location where the central summit of the bra pad will be when it is completed after thermoforming.

U.S. Pat. No. 2,616,093 to Talalay discloses an apparel pad such as a shoulder or breast pad, which as a concavo-complex shape with a thickness graduated from a relatively thick portion to a relatively thin portion using different pieces of material to build up the pad.

U.S. Pat. No. 3,311,007 to McGee discloses an apparatus for producing at least one contoured surface upon a foamed material pad but is very different from the present invention because it teaches the effects of cutting a foam member which is compressed by a male mold portion against an opposite flat mold portion, and thus, the contour of the shaved material is based on the shape of the male mold portion. McGee fails to teach contouring of an article based on a foam material being pressed to cover and penetrate a recess before the foam material is shaved.

U.S. Pat. No. 2,727,278 to Thompson discloses a method of making a molded composite bra, in which the thickness of filler material in each bra pad has a summit thickness greater than the thickness surrounding the summit. The process for making the molded bra is however very different from the present invention and does not teach shaving a material compressed into a recess.

The remaining patents disclose other pad-related technology which are distinguishable from the invention, and they are enclosed for general reference.

A need remains for an improved pad, as well as a method for producing such a bra pad, which adds some padding effect to the bra but in a very subtle manner so that the padding is barely perceptible.

SUMMARY OF THE INVENTION

It is an object of the present invention to provide a method of manufacturing a bra pad having a thicker central summit area, as well as the pad itself and the apparatus for manufacturing the pad, comprising holding a sheet of uniform thickness, resilient and formable material, such as thermoplastic foam, and forming the sheet to have one or two thicker summit areas corresponding to the summits of the bra or bra-like garment (here called a bra for any garment in which the pads are ultimately used). Each pad thus has a thicker summit area for extending over the summits of the breasts of a wearer of the bra.

A further object of the invention is to provide the bra pad made in accordance with the method of the invention.

A further object of the present invention is to provide a bra or brassiere which includes molded cup forms which address the above mentioned limitations of the prior art or which will at least provide the public with a useful choice.

It is a further object of the present invention to provide a molded cup form for a brassiere including a laminated structure of a first panel of a flexible foam material and a second panel material, the first and second panels being substantially coextensive to each other and define a breast cup perimeter shape, wherein the first panel of flexible foam material is of varying thickness, providing a zone of greater thickness at a region or regions away from the perimeter as compared to regions of lesser thickness more proximate to the perimeter. Preferably the zone of greater thickness is located where, in use, a nipple of the wearer of the bra incorporating the breast cup is normally located.

Preferably the first panel is of a uniform thickness save for the zone of greater thickness, the zone of greater thickness having a maximum thickness at the center of the zone and being of a gradually reducing thickness toward the perimeter of the zone.

The second panel is disposed to the first major side of the first panel, to form a coextensive planar assembly which is molded to define a cup shape into the planar assembly and then any excess non-cup shape defined regions are removed from the assembly.

This invention may also be said broadly to comprise in the parts, elements and features referred to or indicated in this specification, individually or collectively, and any or all combinations of any two or more of said parts, elements or features, and where specific integers are mentioned herein which have known equivalents in the art to which this invention relates, such known equivalents are incorporated herein as if individually set forth. For the purposes of illustrating the invention, there is shown in the drawings a form which is presently preferred, it being understood, however, that this invention is not limited to the precise arrangements shown.

The various features of novelty which characterize the invention are pointed out with particularity in the claims annexed to and forming a part of this disclosure. For a better understanding of the invention, its operating advantages and specific objects attained by its uses, reference is made to the accompanying drawings and descriptive matter in which a preferred embodiment of the invention is illustrated.

BRIEF DESCRIPTION OF THE DRAWINGS

In the drawings:

FIG. **1** is a side elevation view of an open shaving mold used to make the pads and to practice the method of the present invention with a sheet of polyurethane foam material therebetween;

FIG. **2** is a view similar to FIG. **1** of the shaving mold in its closed position and with a shaving device in an initial position of use;

FIG. **3** is a view similar to FIG. **2** with the shaving apparatus in a final position;

FIG. **4** is a side elevational view of a shaved or graduated sheet component of the bra pad in accordance with the present invention;

FIG. **5** is a view similar to FIG. **4** of an assembled pre-form of the bra pad according to the present invention;

FIG. **6** is an exploded view of a forming mold with the pre-form bra pad between the mold halves thereof;

FIG. **7** is a sectional view of a formed component for creating two foam pads of the present invention;

FIG. **8** is a top plan view of the formed component of FIG. **7**;

FIG. **9** is a view of a pair of bra pads constructed in accordance with the present invention;

FIG. **10** is an exploded sectional view through an assembly of panels prior to being formed and laminated together for the purposes of providing the bra cup, according to another embodiment of the present invention;

FIG. **11** is a sectional view through an assembly of panels of FIG. **10**, prior to being molded;

FIG. **12** illustrates two panel assemblies of the invention, prior to being laminated together and prior to being formed into a three dimensional cup form by molding elements;

FIG. **13** is a plan view of a cup form having been molded and trimmed to define a perimeter suitable for incorporation as part of a brassiere;

FIG. **14** is a sectional view through an alternative configuration of an assembly of panels to that of FIG. **11**;

FIG. **15** is an alternative to FIG. **14**;

FIG. **16** is a perspective view of a brassiere incorporating the cup forms of the invention;

FIG. **17** is a sectional view through section **17**—**17** of FIG. **13** wherein the assembly of panels according to that shown in FIG. **12** is provided; and

FIG. **18** is a sectional view through section **17**—**17** of FIG. **13** wherein an assembly of panels as shown in FIG. **14** is provided.

DESCRIPTION OF THE PREFERRED EMBODIMENTS

Referring now to the drawings, in which like reference numerals are used to refer to the same or functionally similar elements, FIG. **1** shows a shaving mold generally designated **10** comprising a lower shaving mold portion **12** and an upper shaving mold portion **14** with a thickness of e.g. 7 mm polyurethane foam **16** therebetween. Although polyurethane foam is illustrated, any thermo plastic foam material can be used according to the present invention and in fact any formable material can be used which is resilient and is capable of being formed into a permanent yet resilient three-dimensional shape. The shaving mold halves or portions **12** and **14** can be made of wood, plastic, metal or other suitable rigid material. Lower mold half **12** contains a pair of recesses **18** in its upper surface which are positioned so

that they are near the central summit of each bra pad to eventually be made in accordance with the present invention.

FIG. **2** illustrates the shaving mold in its closed position with the resilient formable sheet of material **16** pressed down onto the lower mold half so that some of the material of sheet **16** is pressed into each recess **18** but also a thickness of material, for example at **20**, remains along the shaving mold halves.

A shaving apparatus generally designated **22** is also illustrated in FIG. **2** which comprises a movable carriage **24**, which carries a blade, knife or shaving member **26** that extends transversely the full width of material sheet **16** (perpendicular to the plane of FIG. **2**). Blade **26** is also positioned intermediate to the upper and lower shaving mold halves **14**, **20** respectively so that a portion of the layer **20** can be neatly shaved from the sheet **16**. For this purpose, member **26** may be heated (e.g., a cutting wire), may be mounted for movement like a band saw, may be reciprocally vibrated back and forth like an electric knife or oscillated in any other appropriate way for cutting the foam material of sheet **16**.

With the shaving apparatus **22** activated to vibrate, heat or otherwise activate member **26**, the carriage **24** is moved in the direction of arrow A and across the sheet **16** until it reaches its final position shown in FIG. **3**. In this position a slice **30** has been made in sheet **16** thus achieving the shaving effect. FIG. **4** shows the shaved component or graduated sheet **16***a* which is removed from the shaving mold after it is opened and which contains a pair of thicker material areas **17** at a summit e.g. of 5.5 mm thickness, surrounded by thinner material areas **19**, e.g. 1 mm thick. FIG. **8** illustrates in dotted line the two summit areas **17** on the rectangular and graduated sheet **16***a* which, in FIG. **8**, has already been attached to as second outer cup sheet **32**, e.g. 2 mm thick, shown in FIG. **5** which is also made of polyurethane foam material. Shaved or graduated sheet **16***a* forms an inner cup sheet.

As shown in FIG. **5**, each of the cup sheets **16***a* and **32** may also include a laminate or fabric covering **33** and **34**, respectively, made, for example, of nylon or nylon with spandex. This is a conventional covering for foam pads used in bras. It is important that in accordance with the present invention, the laminate **33** be on the outer inner surface of the inner cup sheet **16***a* so that it is not shaved away by the shaving apparatus **22** and that the outer cup sheet **32** have its laminate **34** on its outer surface. This leaves the inner surfaces of panels **16***a* and **32** free to receive sprayed on glue. After the glue is sprayed on the two surfaces are pressed against each other to produce the single composite pre-form illustrated in FIG. **5**.

In FIG. **6** a thermo-forming mold **40** is generally designated **40** and, as illustrated, includes a lower female mold portion or half **42** and an upper mold half or portion **44**. The pre-form **16***a*, **32** is positioned between the mold halves **42**, **44** with the summits **17** centered on a pair of recesses **46** formed in the lower female mold half **42** which also correspond with a pair of male projections **48** formed in the male mold half **44**. Each projection **48** may also include a slight recessed or flattened area **49** or an area which is shaped to keep from completely crushing the summit areas **17** of the inner cup sheet **16***a*.

The mold halves are heated to the appropriate level for molding the pre-form into a finished molding illustrated in FIGS. **7** and **8**. The finished molding has a pair of spaced apart thicker summit areas **17**, e.g. 5–6 mm thick, surrounded by the thinner surrounding areas **19**, e.g. 1 mm thick, which completely encircle each summit area **17** and have an inner area of e.g. 2 mm thick, so that a bra manufactured with or containing the bra pads of the present invention will have a slightly thicker area **17**, for example 3 mm, over the summit of each breast summit, and thinner material, e.g. tapering down to 1 mm, in thinner areas **19**.

FIG. **9** illustrates the pair of pads **52**,**54** which are cut from the molding of FIGS. **7** and **8** by cutting the surrounding thinner area around the summit areas and are ready for use in a bra, in a conventional manner. The pads **52**,**54** may also be used in other garments for covering the torso of a woman and which contain bra or bra-like structures such as bathing suits, camisoles, and the like.

With reference to FIG. **16** there is shown a bra or brassiere **101** including two breast cup constructions **102** which have been engaged to various other components of the brassiere **101** such as for example body straps **103** and over the shoulder straps **104**.

The breast cups **102** are engaged together at an intermediate connection **105**. The breast cups have a perimeter **106** and a body portion **107** inward of the perimeter **106**. The breast cup is of a form having been molded and to a large extent is of a single structure comprising or consisting of a plurality of overlying and preferably substantially coextensive panels defining the assembly of the cup form. It is however envisaged that the breast cup of the present invention may have disposed therefrom or engaged thereto by means of sewing or otherwise affixing additional panels which may extend from the perimeter **106** of the cup form or may be associated with the cup form **102** intermediate of the perimeter **106** and define part of the body portion **107** of the cup form.

The two breast cups **102** of the brassiere are substantial mirror image about the intermediate connection **105**. Reference has been and will now be made to a single breast cup formed or to be formed from precursor materials, however, it will be appreciated that such reference is also reflective of the provision of the same form of breast cup for the other cup to be incorporated into a brassiere.

With reference to FIG. **13**, there is shown a breast cup **102**. The breast cup is molded to a three dimensional form, such as a cup form appropriate for the purpose of supporting and covering at least part of the breast of the wearer. The breast cup **102** has been molded from materials which, with reference to FIG. **10**, may include a first panel of flexible foam material **108**, preferably a second panel of flexible foam material **109**, a covering panel of flexible fabric material **110** and a second panel of covering flexible fabric material **111**. In an alternative form however as for example shown in FIG. **14**, the breast cup may be defined by a first panel of flexible foam material **108**, the covering flexible fabric material **110** and the second panel of covering flexible material without there being a provision of a second panel of flexible foam material **109**.

While reference herein is made to such panels being directly affixed to each other preferably by laminating such as by heat and/or adhesive laminating, it will be appreciated that panels or panel assemblies consisting of plies of sheet material may be provided intermediate of those panels.

With reference to FIG. **10**, there is shown a sectional view of the panels of the breast cup of the present invention consisting of a first panel of a flexible foam material **108** and a second panel of a flexible foam material **199**.

Disposed and preferably substantially coextensive with the first panel of foam material **108** there is provided a panel of flexible fabric material **110**. The laminated assembly of the panel **108** and **110** may be provided from roll stock

material to be used in the method of the present invention. The fabric material **110** may for example be nylon and the foam material may for example be polyurethane. The foam panel **109** includes a first major surface **113** which is exposed and a second major surface **114** against which the fabric panel **110** is laminated. In this precursor form of the assembly of panel **108** and **110**, such an assembly is in an unmolded condition and in a natural state assumes a flat or planar condition.

A second panel of flexible foam material **109** in assembly for example with a second panel of flexible fabric material **111** is also provided. The second panel of foam material **109** includes an exposed major surface **115** and a covered major surface **116** against which the second flexible fabric panel is laminated. Like the assembly of panels **108** and **110**, the panels **109** and **111** may be provided in a precursor form from a feed of roll stock and in a natural state assume a substantially planar or flat condition.

The size of the resulting rectangular cut precursor panel assemblies is such that when subjected to molding in a molding machine to define the three dimensional cup form thereof, it is of a sufficiently large size to define the entire desired cup form. The first panel of foam material **108** is preferably of a greater thickness X than the thickness Y of the second panel of foam material **109**.

With reference to FIG. **11**, the first panel of foam material **108** is formed to define a zone of increased thickness **116**. This zone of increased thickness **116** is provided intermediate of the perimeter **117** of the assembly of panels **108**, **110**. The zone of increased thickness **116** is also provided inward (inward of the perimeter) of that region of the panel assembly **108**, **110** into which a molded cup form to ultimately define a breast cup of the present invention will be defined.

Accordingly when formed to a cup form with the other panels to define the breast cup of the present invention as shown in FIG. **13**, the zone of increased thickness **116** is provided inward from the perimeter **106** of the breast cup. In the preferred form the first panel of flexible foam material prior to being molded is formed to be of a substantially constant thickness Z save for the zone of increased thickness **116**. In the most preferred form such contouring is by the shaving of the panel to define the contoured shape on the first major side **113** of the precursor panel of flexible foam material **108** as disclosed in greater detail above.

After having been formed/shaped the then contoured first major surface **113**A of the first panel of flexible foam material **108** will include the zone of increased thickness **116** extending from regions of reduced thickness at or towards the perimeter of the panel assembly **108**, **110**. The zone of increased thickness may for example be a dome shape as for example shown in FIG. **11** and of a constant diameter D.

Alternatively the shape may be of a gradually undulation as for example shown in FIG. **14**. So that the existence of this zone of increased thickness in the final version of the brassiere is to a large extent disguised, it is preferred that the zone of increased thickness **116** has a maximum thickness or summit substantially centrally within the zone and provides a reduction in thickness towards the perimeter **119** of the zone. Such reduction in thickness may be by a linear tapering, for example, shown in FIG. **14**. In the most preferred form the second panel of flexible foam material **109** is not subjected to any contouring. The first panel of flexible foam material **108** is subjected to contouring but only on the non-fabric side of the first panel, opposite to panel **110**.

The assembly of panels **108**, **110** is then laminated with the assembly of panels **109**, **111** in a molding device as for example shown in FIG. **12**. The molding device consists of two mold portions **120** and **121** each having formed therein a profile or contour of a kind to introduce into the precursor assemblies of panels the three dimensional or cup form of the breast cup. The upper mold portion **120** for example includes a concave relief and the lower portion **121** provides a convex upstand of a substantially complimentary shape to the concave recess of the upper mold portion **120**.

The assemblies of panels **108**, **110** and **109**, **111** are positioned intermediate of the mold portions in a manner so that they overly each other in an appropriate condition (preferably coextensively) whereupon the two mold portions are then brought together. The two mold portions are preferably heated. Additional adhesive may be placed intermediate of the assemblies so that both pressure adhesive and heat will ensure that a good laminated bond can be established between the two subassemblies. Upon the formation of the cup form into the precursor panel or panel assemblies, the cup form can be trimmed from the molded precursor panels to define a perimeter shape such as for example shown in FIG. **13**. Part of the perimeter of the cup form **106** may include an additional compression zone **123** where the overlying panels of material have been subjected to more enhanced compression than that of the main body portion **107**. Such additional compression zones may serve the purpose of allowing for the cup to define a flange useful for the purposes of securing the cup to other components of the brassiere.

With reference to FIG. **13**, it can be seen that upon the forming of a three dimensional form or cup form in the precursor materials as well as laminating the precursor materials together, will locate the zone of increased thickness **116** inward from the perimeter **106** of the breast cup **102**. The zone of increased thickness **116** is provided within the body portion **107** of the breast cup **102**. This zone of increased thickness is positioned to correspond with the usual location of the nipple of the breast of a wearer of a brassiere incorporating the breast cup **102**.

With reference to FIG. **17** there is shown a cross sectional view through section **17**—**17** of FIG. **13** wherein the zone of increased thickness **116** is shown to be provided to enhance the overall thickness of the breast cup in such zone. Thickness B is greater than thickness C. While the thickness is perhaps only marginally greater at B than at C, a further enhancement to reduce the visibility of a nipple of a wearer through the breast cup is as a consequence of the higher density of material at the zone of increased thickness **116**. Once the breast cup has been formed, the zone of increased thickness **116** will compress slightly such compression enhancing the material density at this zone thereby reducing the likelihood of observing the presence of the nipple through the breast cup. In the preferred form the thickness E is substantially the same as the thickness X and accordingly at the region of maximum thickness of the zone of increased thickness **116**, little or no shaving or removal of the foam from the precursor precontoured panel of flexible foam material **8** has occurred.

With reference to FIG. **15**, there is shown an alternative to the formation of the zone of increased thickness **116** wherein a first ply of foam material has engaged to its exposed major surface **113** a second ply of material **124** such as a like foam material which has been contoured to provide the same desired profile to the assembly of the first ply and the second ply **124** as that shown for example in FIG. **11** or **14**.

While in the most preferred form, the second assembly consisting of the second panel of flexible foam material **109** and panel of fabric material **111** laminated by adhesion to the first panel of foam material, with reference to FIG. **18** there is an alternative where the first panel **108** receive the flexible panel of fabric material **111**, directly engage without the presence of a second panel of foam material **109** being present. An assembly of such a configuration formed to a cup form is shown in FIG. **18**.

While a specific embodiment of the invention has been shown and described in detail to illustrate the application of the principles of the invention, it will be understood that the invention may be embodied otherwise without departing from such principles.

What is claimed is:

1. A method of manufacturing a bra pad, comprising:

holding a sheet of resilient and formable material having a uniform thickness in a shaving mold having a graduated recess, with at least some of the material in at least one recess of the shaving mold; and

removing some of the material from the sheet of resilient and formable material by shaving, to leave a graduated sheet of the material having at least one graduated thicker summit area corresponding to the recess of the shaving mold, and a surrounding thinner area of the graduated sheet forming the bra pad shape.

2. A method according to claim **1**, wherein the material of the sheet is thermo-formable material, the method including thermo-forming the graduated sheet.

3. A method according to claim **1**, including cutting a bra pad out of the graduated sheet by culling some of the surrounding thinner area of the graduated sheet around the summit area.

4. A method according to claim **1**, wherein the graduated sheet has a pair of spaced apart summit areas.

5. A method according to claim **1**, including adhering to the graduated sheet, a further sheet of resilient and formable material and then forming the graduated sheet with the adhered further sheet of material to form a bra pad.

6. A method according to claim **1**, wherein the removing of material by shaving step comprises passing a cutting tool across the sheet of resilient and formable material having a uniform thickness, while the sheet is held in the shaving mold with at least some of the material in the at least one recess of the shaving mold.

7. A bra pad comprising:

first sheet of resilient and formable material having an initial uniform thickness and from which some material has been removed to leave a graduated sheet of the material having at least one graduated thicker summit area, and a surrounding thinner area; and

a further sheet of resilient and formable material adhered to the graduated sheet of resilient and formable material forming the bra pad.

8. A pad according to claim **7**, wherein the sheets of resilient and formable material each comprise thermoplastic material.

9. A pad according to claim **8**, wherein the thermoplastic material is polyurethane foam.

10. A pad according to claim **7**, wherein the further sheet of resilient and formable material adhered to the graduated sheet of resilient and formable material has a fabric laminate on outer surfaces of each sheet of material which is opposite from a surface at which the sheets of material are adhered to each other.

11. A pad according to claim **7**, wherein the removing of some of the material to leave the graduated sheet of the material is performed by shaving.

12. A pad according to claim **11**, wherein the shaving step comprises passing a cutting tool across the sheet of resilient and formable material having a uniform thickness, while held with at least some of the material in the at least one recess of a shaving mold.

13. A molded breast cup for a brassiere including a molded to a cup form and laminated structure of a first panel of a flexible foam material and a second panel of flexible material, said first and second panels being substantially coextensive to each other and define a breast cup perimeter shape, wherein said first panel of flexible foam material is of varying thickness, providing a zone of greater thickness at a region or regions away from said perimeter more than regions of lesser thickness more proximate to said perimeter, said first panel having said varying thickness introduced by a contouring of a first major side thereof, an opposite second major side thereof being uncontoured other than having been formed to said cup shape.

14. A molded breast cup as claimed in claim **13**, wherein said first panel is a flexible foam material.

15. A molded breast cup as claimed in claim **13**, wherein said second panel is a flexible fabric material.

16. A molded breast cup as claimed in claim **13**, wherein said zone of greater thickness is located where, in use, a nipple of the wearer of said brassiere incorporating said breast cup is normally located.

17. A molded breast cup as claimed in claim **16**, wherein said first panel is of a uniform thickness save for at said zone of greater thickness.

18. A molded breast cup as claimed in claim **17**, wherein a transition of thickness between said zone of greater thickness and said uniform thickness region of said first panel of flexible foam material is without sudden thickness change.

19. A molded breast cup as claimed in claim **18**, wherein said transition of thickness between said zone of greater thickness and said uniform thickness region of said first panel of flexible foam material is with of a smooth transition.

20. A molded breast cup as claimed in claim **13**, wherein said first panel is of a uniform thickness save for at said zone of greater thickness, the zone of greater thickness having a maximum thickness at the center of said zone and being of a gradually reducing thickness towards the perimeter or the zone.

21. A molded breast cup as claimed in claim **13**, wherein said first major side of said first panel is disposed to the second panel.

22. A molded breast cup as claimed in claim **13**, wherein said first major side of said first panel is engaged to the second panel.

23. A molded breast cup as claimed in claim **13**, wherein said first panel is engaged to the second panel.

24. A molded breast cup as claimed in claim **13**, wherein said first panel is a unitary panel.

25. A molded breast cup for a brassiere including a molded cup form and laminated structure of a first panel of a flexible foam material and a second panel of a flexible material, said first and second panels being substantially coextensive to each other and define a breast cup perimeter shape, wherein said first panel of flexible foam material is of varying thickness, providing a zone of greater thickness at a

region or regions away from said perimeter more than regions of lesser thickness more proximate to said perimeter, said first panel consisting of a first ply of foam material uniform thickness and a second ply of material engaged therewith in a manner to create said zone of greater thickness.

26. A molded breast cup as claimed in claim **25**, wherein said second ply is of a foam material.

27. A molded breast cup as claimed in claim **13**, wherein a first panel of fabric material overlies said assembly to the concave side of its said cup shape.

28. A molded breast cup as claimed in claim **27**, wherein said first panel of fabric material is laminated to one of said first panel of flexible foam material and second panel.

29. A molded breast cup as claimed in claim **13**, wherein a second panel of fabric material overlies said assembly to a convex side of said cup shape.

30. A molded breast cup as claimed in claim **28**, wherein said second panel of fabric material is laminated to the other of said first flexible foam material and said second panel.

31. A molded breast cup as claimed in claim in **13**, wherein said first panel is disposed at the concave side of said cup shape and said second panel is disposed at the convex side of said cup shape.

32. A molded breast cup as claimed in claim in **13**, wherein said first panel is disposed at the convex side of said cup shape anti said second panel is disposed to concave side of said cup shape.

33. A molded breast cup as claimed in claim in **13**, wherein said first and second panels contain no seams, lines of stitching inward of a region immediately adjacent said perimeter.

34. A molded breast cup as claimed in claim in **13**, containing no seams lines or stitching inward of a region immediately adjacent said perimeter.

35. A brassiere incorporating a breast cup as claimed in claim **13**.

36. A method of forming a molded breast cup comprising:

laminating (a) a first planar panel of a first ply of flexible foam material end a second ply of flexible Foam material engaged to a first major side of said first ply said first panel is of varying thickness such having been defined by the provision of said second ply to said first ply to create a zone which is of greater thickness at a region or regions away from the perimeter more, than at regions of lesser thickness more proximate to said perimeter, with (b) a second panel of flexible material wherein said second panel is disposed to the first major side of said first panel, to form a coextensive planar assembly; molding said planar assembly to define a cup shape into said planar assembly; and removing any excess non cup shape defined regions from said assembly.

* * * * *