US009943120B1

(12) **United States Patent**
Rendone

(10) **Patent No.: US 9,943,120 B1**
(45) **Date of Patent: *Apr. 17, 2018**

(54) **BRA WITH STORAGE POCKETS**

(71) Applicant: **NIKE, Inc.**, Beaverton, OR (US)

(72) Inventor: **Nicole Rendone**, Beaverton, OR (US)

(73) Assignee: **NIKE, Inc.**, Beaverton, OR (US)

(*) Notice: Subject to any disclaimer, the term of this patent is extended or adjusted under 35 U.S.C. 154(b) by 0 days.

This patent is subject to a terminal disclaimer.

(21) Appl. No.: **15/718,171**

(22) Filed: **Sep. 28, 2017**

Related U.S. Application Data

(63) Continuation of application No. 15/597,364, filed on May 17, 2017.

(51) **Int. Cl.**
A41C 3/00 (2006.01)

(52) **U.S. Cl.**
CPC ***A41C 3/0035*** (2013.01); ***A41C 3/0014*** (2013.01); ***A41C 3/0057*** (2013.01)

(58) **Field of Classification Search**
CPC . A41D 1/14; A41D 1/22; A41D 27/20; A41B 9/001
USPC 450/89, 86, 36, 54–57; 2/247, 250, 220, 2/76, 69, 67
See application file for complete search history.

(56) **References Cited**

U.S. PATENT DOCUMENTS

246,675	A	9/1881	Hilboen	
867,487	A	10/1907	Drennan	
1,900,129	A	3/1933	Ring et al.	
2,149,819	A	3/1939	Rubinstein et al.	
2,436,430	A	2/1948	Hart et al.	
2,492,862	A *	12/1949	Harvey	A41C 3/0035 150/101
2,503,847	A	4/1950	Shanahan et al.	
2,593,711	A	4/1952	Weatherly et al.	
2,610,325	A	9/1952	Schlussel et al.	
2,624,881	A *	1/1953	Lee	A41C 3/0035 2/247
2,671,899	A	3/1954	Kroger et al.	
2,764,759	A	10/1956	Gazelle et al.	
2,920,628	A	1/1960	Aileene et al.	

(Continued)

FOREIGN PATENT DOCUMENTS

CN	202566327	U	12/2012
CN	202566328	U	12/2012

(Continued)

OTHER PUBLICATIONS

"WOMEN'S STOW-N-GO BRA A/B" Last accessed Feb. 20, 2017 https://www.thenorthface.com/shop/womens-stow-n-go-bra-a-b-nf0a2tin-c1.

(Continued)

Primary Examiner — Gloria Hale
(74) *Attorney, Agent, or Firm* — Shook, Hardy and Bacon L.L.P.

(57) **ABSTRACT**

Aspects herein are directed to a bra with multiple pockets positioned at different locations on the bra to provide a variety of storage options. The bra comprises one or more portions comprised of layers of material where the pocket spaces are formed between the layers of material. The layers of material of the different portions are joined along their perimeter edges except for one or more select areas that form openings in communication with the pocket spaces.

17 Claims, 11 Drawing Sheets

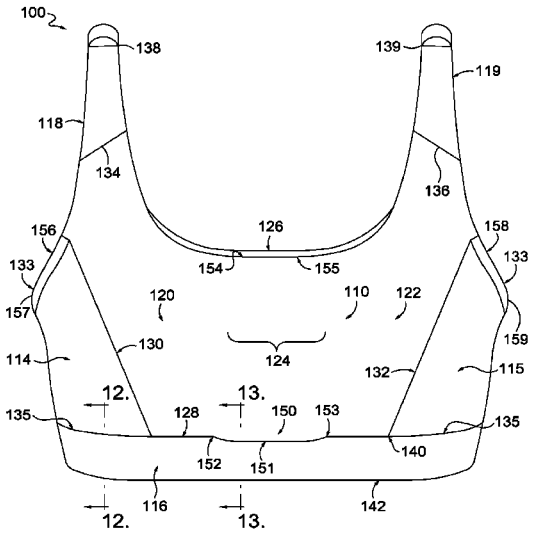

(56) **References Cited**

U.S. PATENT DOCUMENTS

3,078,852	A *	2/1963	Stapleton	A41C 3/00 450/89
3,459,191	A	8/1969	Barg	
3,518,998	A	7/1970	Barg	
3,565,081	A	2/1971	Barg	
4,666,432	A	5/1987	McNeish et al.	
5,067,178	A	11/1991	Katchka et al.	
5,496,205	A	3/1996	Lee	
5,573,441	A	11/1996	Smith et al.	
D408,963	S	5/1999	Consolo	
6,099,382	A	8/2000	Wilson	
6,176,761	B1	1/2001	Underhill	
D448,541	S	10/2001	Robinson	
6,434,751	B1	8/2002	Gustafson et al.	
6,517,410	B1	2/2003	Underhill	
6,626,733	B1	9/2003	Knutson	
D522,717	S	6/2006	Aurilia et al.	
7,081,034	B1	7/2006	Zoellner	
D529,259	S	10/2006	Faagau	
7,234,996	B1	6/2007	Donker	
D554,326	S	11/2007	Nuse	
7,364,491	B2	4/2008	Updyke	
7,396,274	B2	7/2008	Wiegmann	
D597,279	S	8/2009	Spillman	
7,585,200	B1	9/2009	McLaren	
7,753,759	B2	7/2010	Pintor et al.	
D625,488	S	10/2010	Messman et al.	
D630,816	S	1/2011	Baramki	
D630,817	S	1/2011	McKee	
7,867,058	B2	1/2011	Sweeney	
D632,458	S	2/2011	Shirer	
D646,461	S	10/2011	Lewando	
D658,352	S	5/2012	Pinner	
8,216,023	B2	7/2012	Donnelly et al.	
8,257,140	B2	9/2012	Kenny	
D668,837	S	10/2012	Palladino	
8,312,568	B2	11/2012	Marois et al.	
D686,389	S	7/2013	Hayes et al.	
8,484,763	B1	7/2013	Lucas	
8,597,071	B2	12/2013	Shweky et al.	
8,597,072	B1 *	12/2013	Lucas	A41C 3/0035 2/247
8,771,036	B2	7/2014	Gentry et al.	
8,898,816	B2	12/2014	Highfield	
D725,872	S	4/2015	Robinson	
9,060,550	B2	6/2015	Conrad	
D733,394	S	7/2015	Gentry et al.	
D737,021	S	8/2015	Gonzales	
D741,566	S	10/2015	Perry et al.	
D745,247	S	12/2015	Mazard	
9,289,016	B1	3/2016	Goff	
9,295,288	B1	3/2016	Goff	
D753,370	S	4/2016	Daniels	
9,307,793	B2	4/2016	Kenny	
9,408,420	B2	8/2016	Betts	
9,456,639	B2	10/2016	Aylward	
9,486,016	B2	11/2016	Cataldo	
2002/0100108	A1	8/2002	Stuart	
2002/0174475	A1	11/2002	Mayr	
2003/0101502	A1	6/2003	Hayes	
2005/0075047	A1	4/2005	Zagame	
2006/0121826	A1 *	6/2006	Nazzaro	A41C 3/0035 450/89
2007/0270078	A1	11/2007	Henry	
2007/0287359	A1	12/2007	Urushihata et al.	
2007/0298684	A1	12/2007	Spagna	
2009/0209173	A1	8/2009	Arledge et al.	
2009/0300818	A1 *	12/2009	Waite	A41D 1/14 2/76
2010/0281595	A1 *	11/2010	Gernes	A41B 9/001 2/69
2011/0223832	A1 *	9/2011	Rose	A41C 3/08 450/86
2011/0225700	A1	9/2011	Kogut	
2011/0244758	A1	10/2011	Boatright et al.	
2011/0277206	A1	11/2011	Sokolowski	
2012/0028541	A1	2/2012	Donnelly et al.	
2012/0034842	A1	2/2012	Roberts et al.	
2012/0064799	A1	3/2012	Rivers	
2012/0142253	A1	6/2012	Javaid et al.	
2012/0276812	A1	11/2012	Wollowick	
2012/0311758	A1 *	12/2012	Nicholson	A41D 27/20 2/67
2013/0305433	A1 *	11/2013	Hedrick	A41D 1/22 2/220
2014/0051331	A1	2/2014	Handras	
2014/0106646	A1	4/2014	Delgado	
2015/0289570	A1	10/2015	Conrad	
2015/0296895	A1	10/2015	Muir	
2015/0359273	A1 *	12/2015	Olson	A41B 9/001 2/250
2016/0058079	A1	3/2016	Sexton	
2016/0095372	A1	4/2016	Peterson et al.	
2016/0143424	A1 *	5/2016	Stephens	A45F 3/005 224/222

FOREIGN PATENT DOCUMENTS

DE	3203872	A1	8/1983
DE	202015104392	U1	10/2015
DE	102014018984	A1	6/2016
EP	1673992	A2	6/2006
FR	2558347	A1	7/1985
GB	2468175	A	9/2010
JP	H10237705	A	9/1998
JP	2001020105	A	1/2001
JP	2002027075	A	1/2002
WO	2016011490		1/2016

OTHER PUBLICATIONS

"Zoot: Run Moonlight Bra Women's" Last accessed Feb. 20, 2017 https://www.rei.com/rei-garage/product/100450/zoot-run-moonlight-bra-womens.

"The Bra With Pockets!"; May 2, 2014 http://web.archive.org/web/20140502060922/http://pocketbra.com/.

"Hydro Pocket"; Aug. 22, 2014 http://web.archive.org/web/20140822054752/http://hydro-pocket.com/.

"Luana Cross Strap Pocket Sports Bra" Last accessed Feb. 20, 2017 http://www.swoob.com/fitness-fashion-sportswear/swoob-luana-cross-strap-sports-bra.

"Sarah Sports Bra Bahamas" Last accessed Feb. 20, 2017 https://www.senitaathletics.com/products/sarah-sports-bra-bahamas.

"JoeyBra, the first sexy and comfortable pocketed bra!" Last accessed Feb. 20, 2017 https://www.kickstarter.com/projects/1094440554/joeybra-the-first-sexy-and-fashionable-pocketed-br.

"APEX Compression Sports Bra" Last accessed Feb. 20, 2017 https://www.sportportactive.com/shop/apex-sports-bra/.

"Gracie's Gear Sports Bra" Last accessed Feb. 20, 2017 https://www.graciesgearandtraining.com/store/sports-bra-pocket-pink/.

"Gracie's Gear Long Tank" Last accessed Feb. 20, 2017 https://www.graciesgearandtraining.com/store/gracies-gear-long-tank/.

"Pocket Bra Cups" Last accessed Feb. 20, 2017 http://kickended.com/projects/1125757884/.

"Lululemon Neon Pink Pack It In Bra", Feb. 20, 2017 Last accessed Sep. 1, 2017 https://www.amazon.com/Lululemon-Neon-Pink-Pack-Bra/dp/B01KVUR86C.

"Cleavage Caddy Snaps to Bras, Gives Women a Secret Purse Underneath Their Blouses" http://www.coolthings.com/cleavage-caddy-snaps-to-bras-gives-women-a-secret-purse-underneath-their-blouses/.

"Secret Stash Bra Pocket" Last accessed Feb. 20, 2017 https://brazabra.com/dressing-solutions-personal-care/secret-stash-bra-pocket/.

Non-Final Office Action dated Dec. 14, 2017 in U.S. Appl. No. 15/597,364, 13 pages.

* cited by examiner

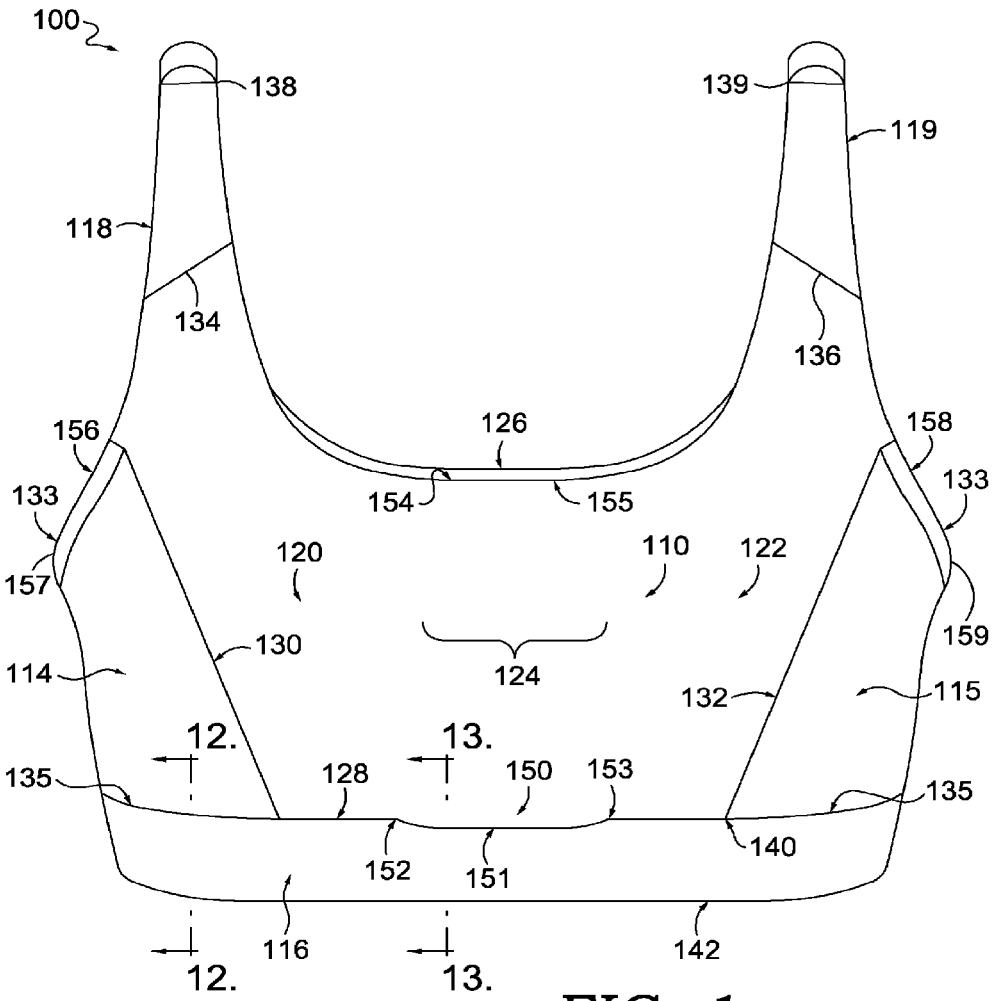
100
138
139
119
118
134
136
126
156
158
133
133
154
155
157
120
110
122
159
130
124
114
132
115
12.
13.
135
128
150
153
135
152
151
140
116
142
12.
13.

FIG. 1.

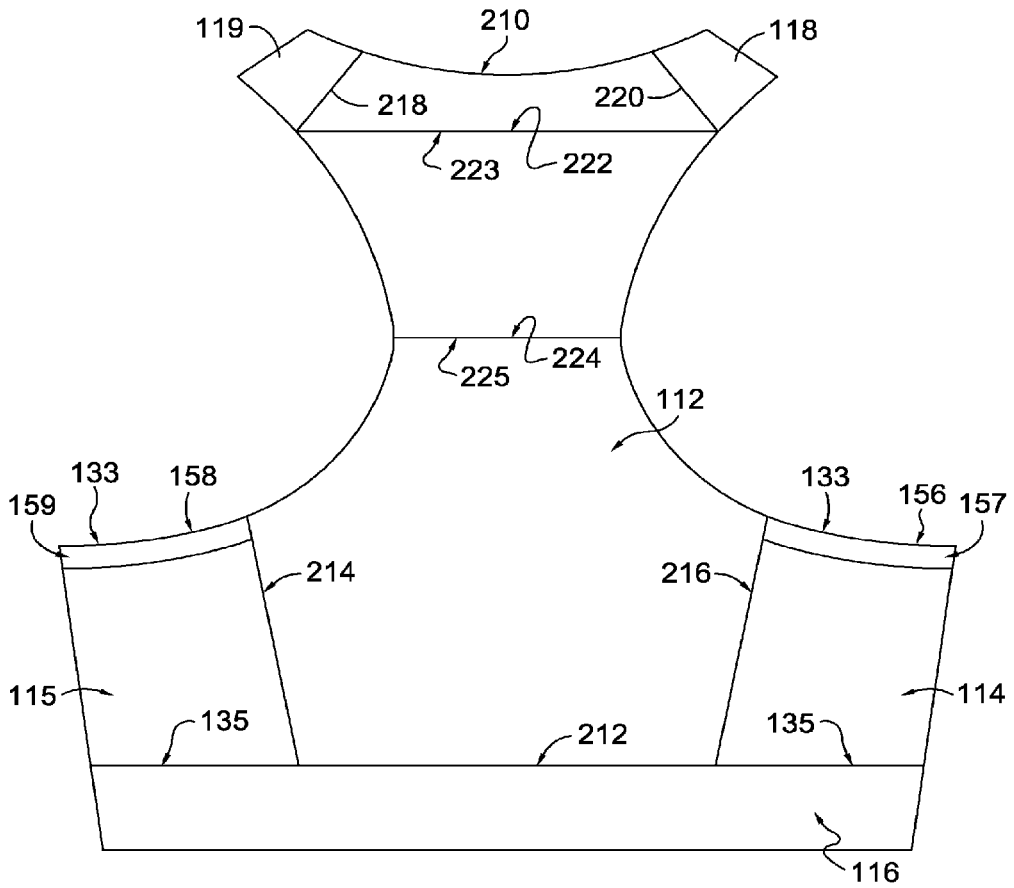
119
210
118
218
220
223
222
224
225
112
133
158
159
133
156
157
214
216
115
114
135
212
135
116

FIG. 2.

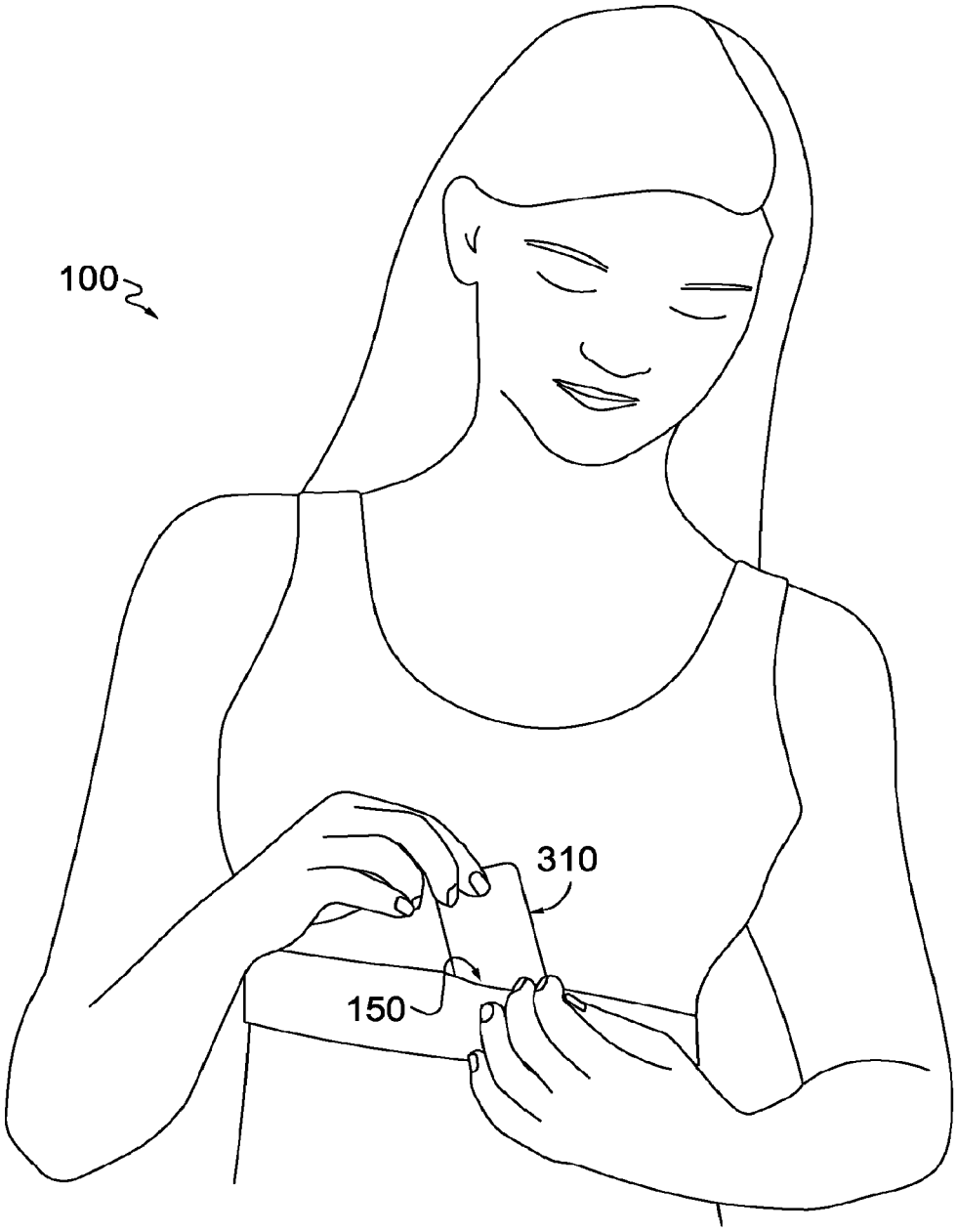

FIG. 3.

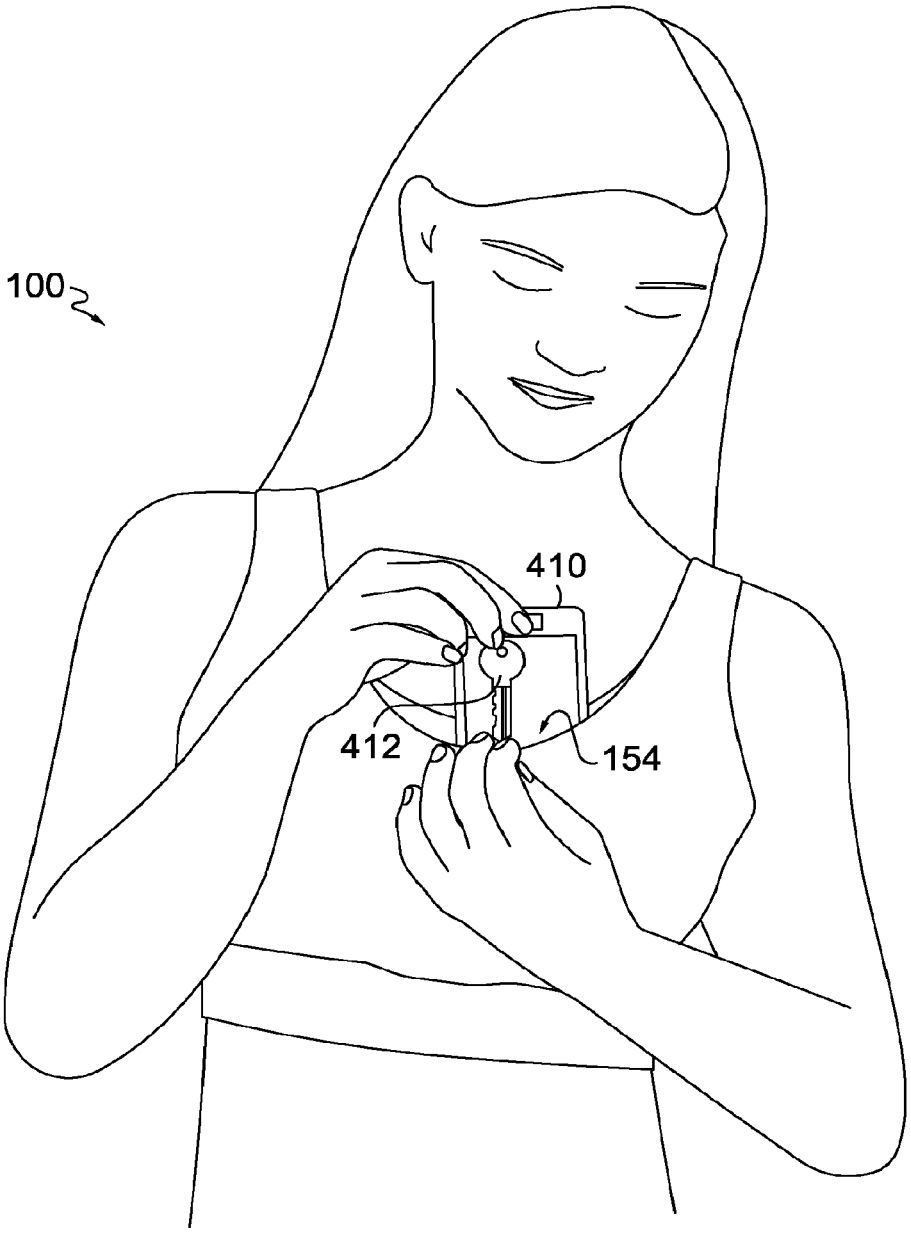

FIG. 4.

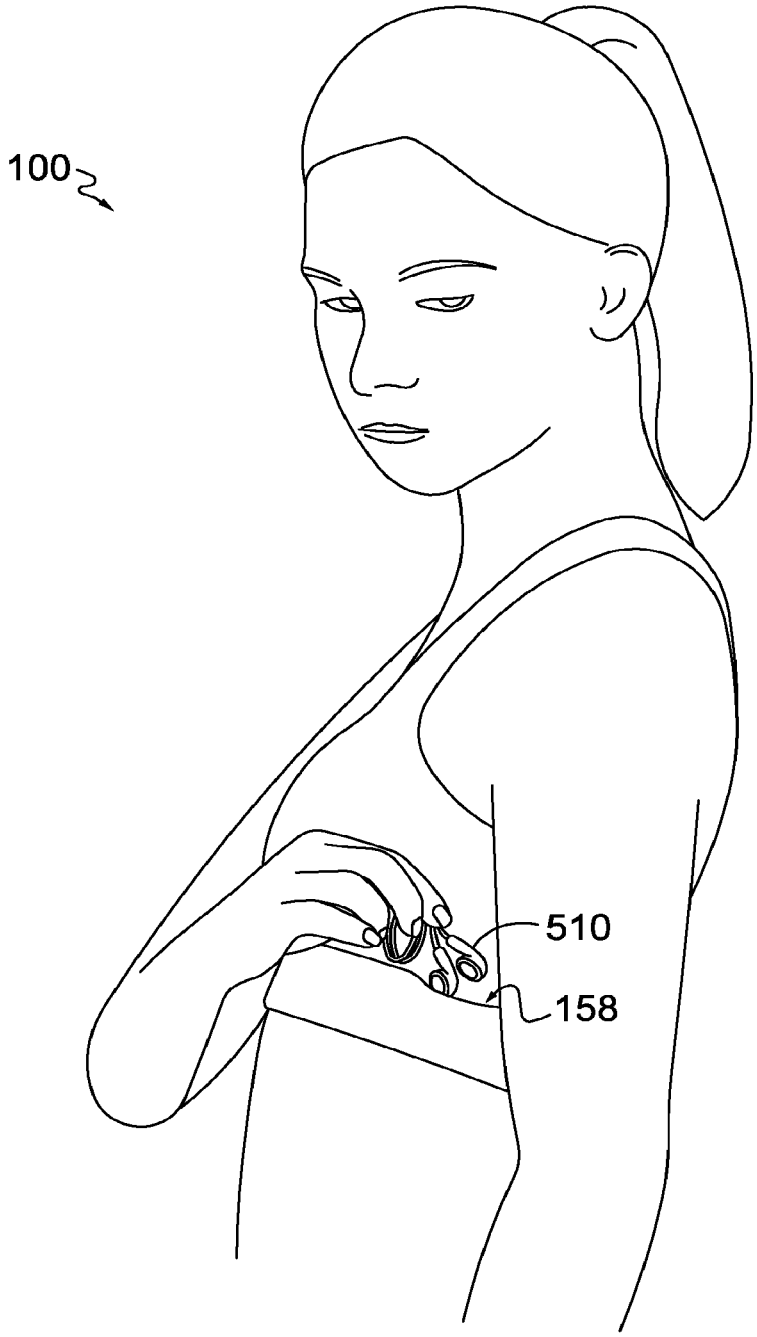

FIG. 5.

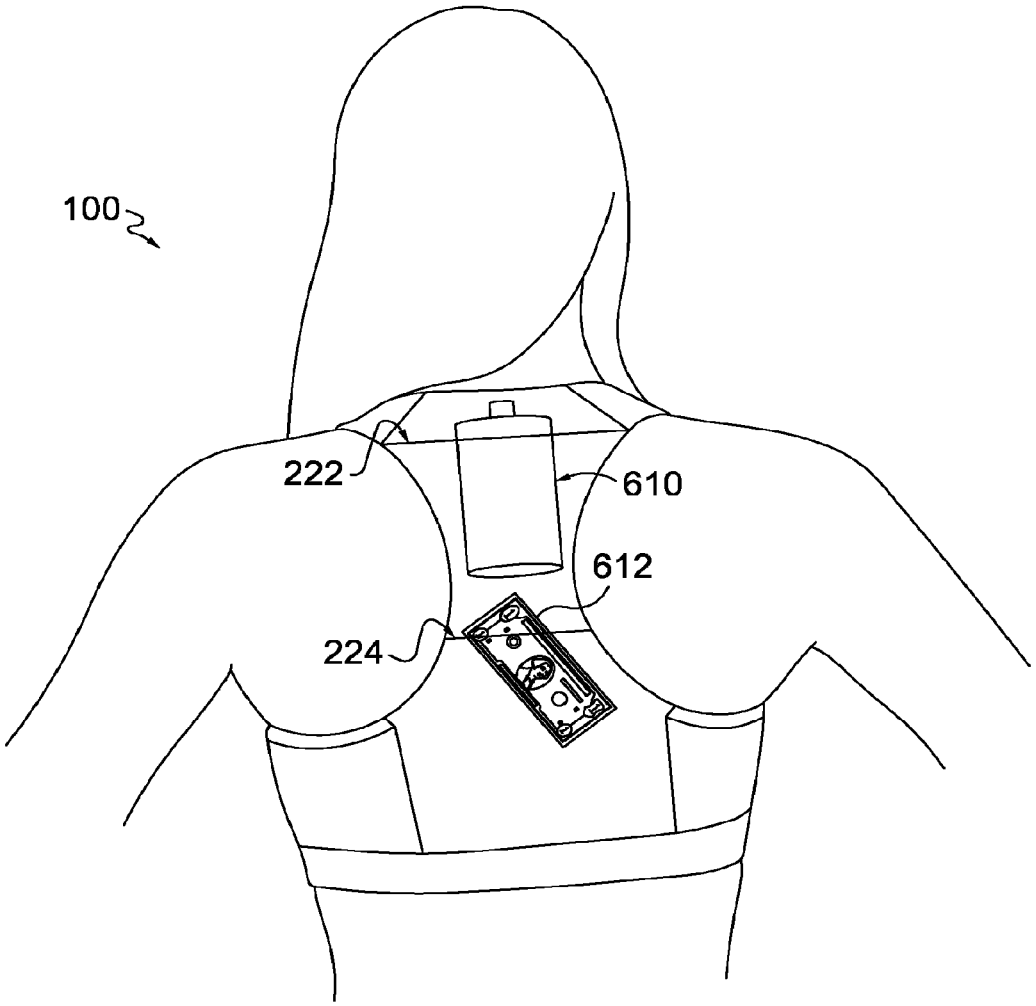

FIG. 6.

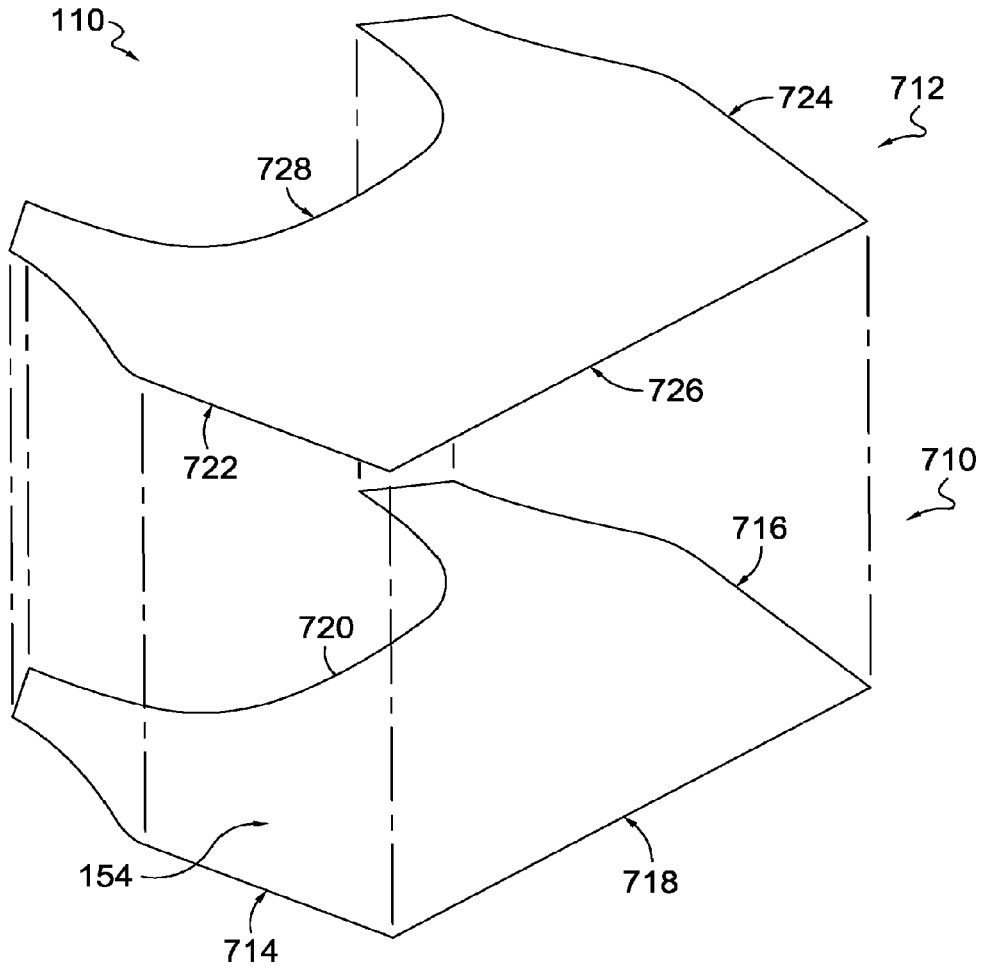

FIG. 7.

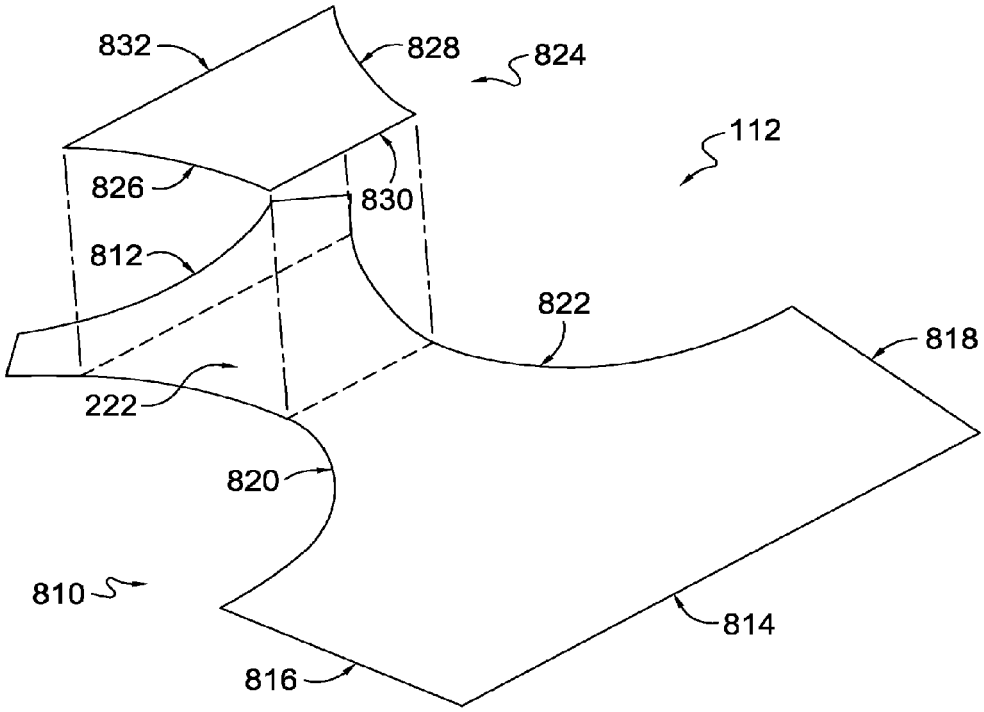

FIG. 8.

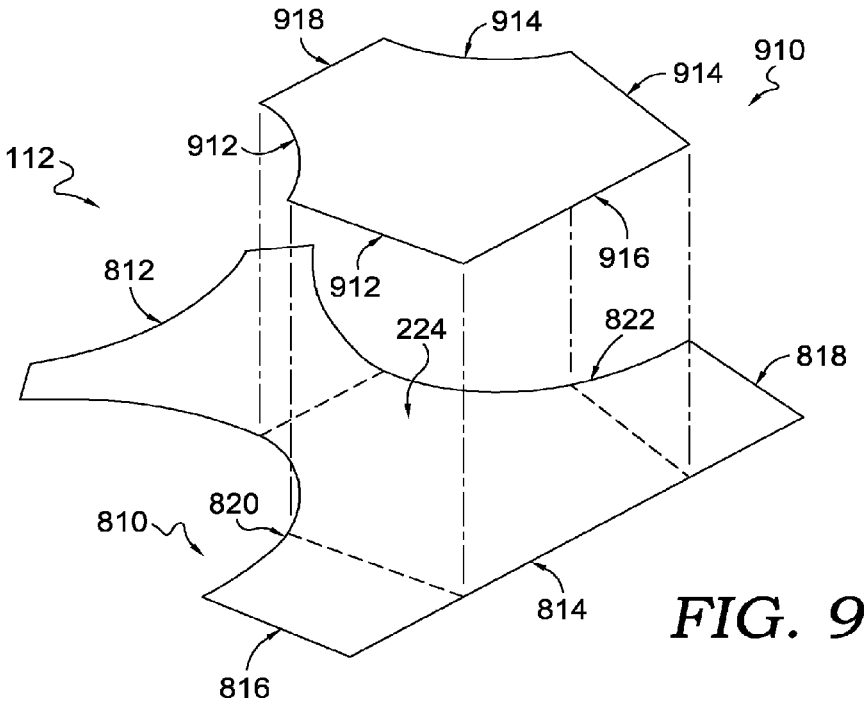
918
914
914
910
112
912
916
812
912
224
822
818
820
810
814
816

FIG. 9.

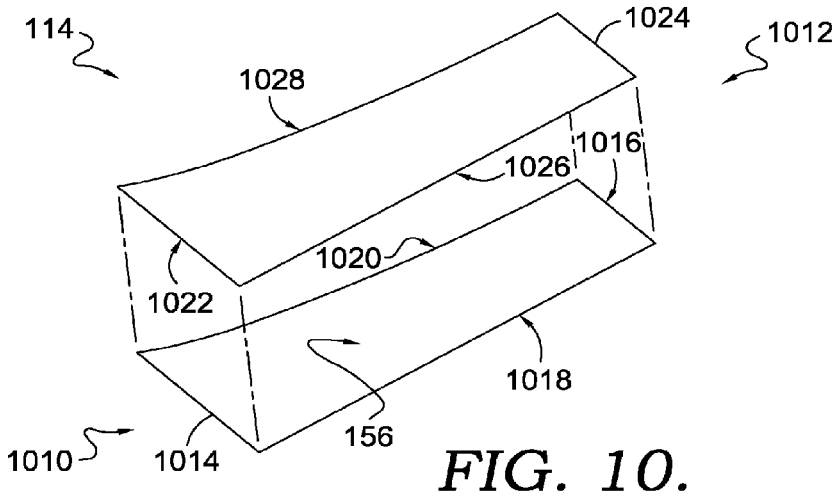
114
1024
1012
1028
1016
1026
1020
1022
1018
156
1010
1014

FIG. 10.

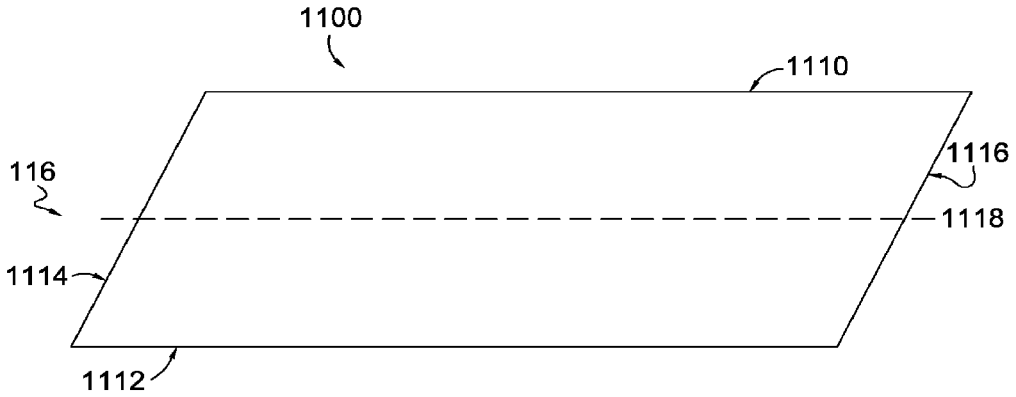

FIG. 11A.

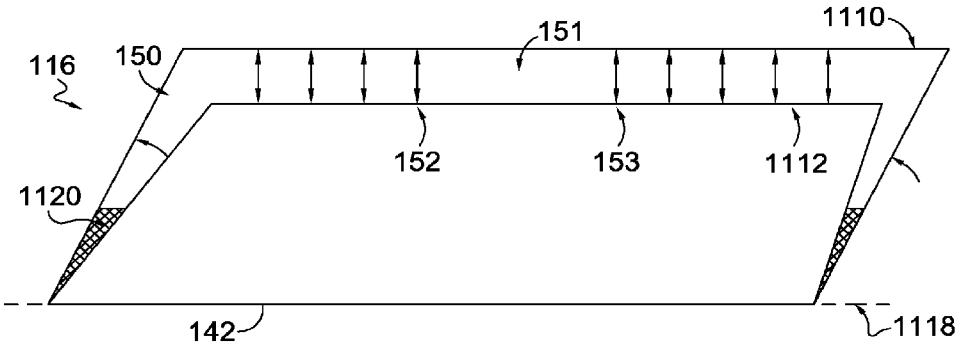

FIG. 11B.

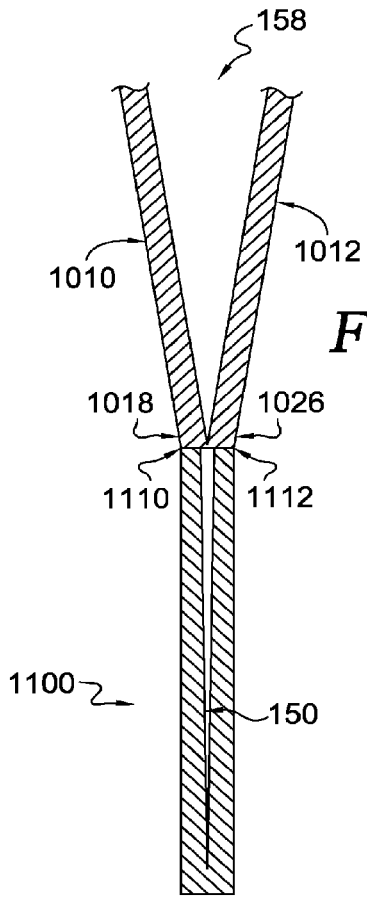
158
1010
1012
1018
1026
1110
1112
1100
150

FIG. 12.

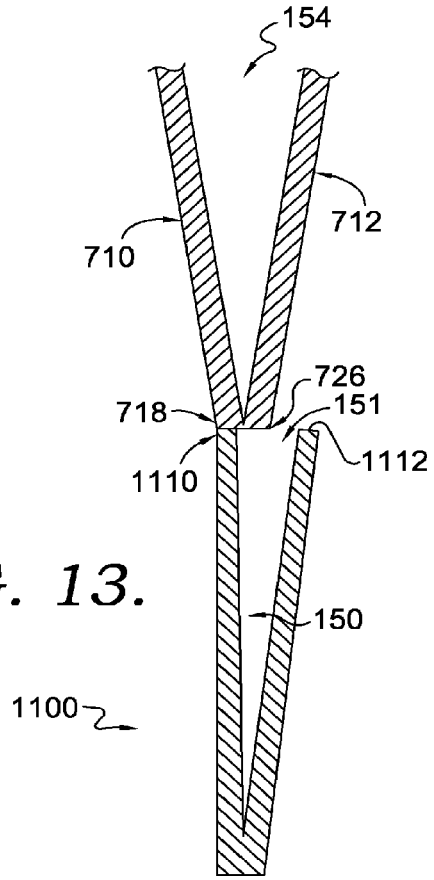
154
710
712
726
718
151
1110
1112
150
1100

FIG. 13.

BRA WITH STORAGE POCKETS

CROSS-REFERENCE TO RELATED APPLICATIONS

This application having U.S. application Ser. No. 15/718,171, filed Sept. 28, 2017, and entitled "Bra with Storage Pockets" is a Continuation application of pending U.S. application Ser. No. 15/597,364, entitled "Bra with Storage Pockets," and filed May 17, 2017. The entirety of the aforementioned application is incorporated by reference herein.

TECHNICAL FIELD

Aspects herein relate to a bra having pockets for stowing items.

BACKGROUND

Bras, especially sport bras, are generally worn to support a wearer's breasts during, for example, athletic activities. These bras generally lack pocket structures for stowing items which may inconvenience the wearer.

BRIEF DESCRIPTION OF THE DRAWINGS

Examples of the present invention are described in detail below with reference to the attached drawings figures, wherein:

FIG. **1** illustrates a front view of an exemplary bra with storage pockets in accordance with aspects herein;

FIG. **2** illustrates a back view of the exemplary bra of FIG. **1** in accordance with aspects herein;

FIGS. **3-6** illustrate the exemplary bra of FIGS. **1** and **2** in various in-use configurations in accordance with aspects herein;

FIG. **7** illustrates an exploded view of a front portion of the exemplary bra of FIGS. **1** and **2** in accordance with aspects herein;

FIG. **8** illustrates a first exploded view of a back portion of the exemplary bra of FIGS. **1** and **2** in accordance with aspects herein;

FIG. **9** illustrates a second exploded view of the back portion of the exemplary bra of FIGS. **1** and **2** in accordance with aspects herein;

FIG. **10** illustrates an exploded view of a side portion of the exemplary bra of FIGS. **1** and **2** in accordance with aspects herein;

FIGS. **11**A and **11**B illustrate a construction of an underband portion of the exemplary bra of FIGS. **1** and **2** in accordance with aspects herein;

FIG. **12** illustrates an exemplary cross-section taken at cut line **12-12** of FIG. **1** in accordance with aspects herein; and

FIG. **13** illustrates an exemplary cross-section taken at cut line **13-13** of FIG. **1** in accordance with aspects herein.

DETAILED DESCRIPTION

The subject matter of the present invention is described with specificity herein to meet statutory requirements. However, the description itself is not intended to limit the scope of this disclosure. Rather, the inventors have contemplated that the claimed or disclosed subject matter might also be embodied in other ways, to include different steps or combinations of steps similar to the ones described in this document, in conjunction with other present or future technologies. Moreover, although the terms "step" and/or "block" might be used herein to connote different elements of methods employed, the terms should not be interpreted as implying any particular order among or between various steps herein disclosed unless and except when the order of individual steps is explicitly stated.

At a high level, aspects herein relate to a support garment, such as a bra, having storage pockets positioned at multiple different locations on the bra to meet the different preferences of a wearer. Female wearers often want and need to store items during training but prefer not to carry additional accessories to stow the items such as fanny packs, shoulder packs, and the like. By providing a bra with multiple storage pockets positioned at different locations, the wearer can not only store a number of items but can choose which location best suits her needs.

In exemplary aspects, the pockets are constructed by forming the different portions of the bra (e.g., front portion, back portion, side portions, and underband portion) from two or more layers of material and selectively attaching the layers along their perimeter edges to define pocket spaces between the layers of material. Low-profile openings to the pocket spaces are formed by not attaching the layers of material at one or more locations along their perimeter edges. In other words, areas where the perimeter edges of the layers of material are unaffixed to each other comprise openings in communication with the pocket spaces. This construction method may be used to form pockets in the front portion of the bra, the back portion of the bra, the side portions of the bra, as well as the underband portion of the bra. Moreover, by configuring the pocket spaces between the layers of the bra, and by forming the pocket openings along the perimeter edges of the different bra portions, the pockets are generally low profile and are less of a distraction to the wearer. As well, they provide a cleaner aesthetic to the bra.

Accordingly, aspects herein are directed to a bra comprising a front portion, a back portion, and a pair of side portions, where the pair of side portions connect the front portion and the back portion of the bra. The bra further comprises an underband portion extending from a lower margin of the front portion, the back portion, and the pair of side portions of the bra, where the underband portion comprises at least a first layer of material and a second layer of material positioned adjacent and external to the first layer of material. As well, the bra comprises a first pocket space formed between the first layer of material and the second layer of material of the underband portion.

In another aspect, a bra is provided comprising a front portion, and a back portion. The back portion comprises a first layer of material having a superior edge forming an upper margin of the back portion and an inferior edge forming a lower margin of the back portion, a second layer of material positioned adjacent and external to the first layer of material to form a first pocket space, where the second layer of material has a superior edge and an inferior edge. The inferior edge of the second layer of material is affixed to the first layer of material, and the superior edge of the second layer of material is unaffixed along at least a portion of its length to the first panel to form a first pocket opening communicating with the first pocket space. The back portion further comprises a third layer of material positioned adjacent and external to the first layer of material to form a second pocket space. The third layer of material has a superior edge generally coincident with the inferior edge of the second layer of material and an inferior edge generally coincident with the inferior edge of the first layer of material. The inferior edge of the third layer of material is affixed

to the first layer of material, and the superior edge of the third layer of material is unaffixed along at least a portion of its length to the first layer of material to form a second pocket opening in communication with the second pocket space. The bra further comprises a pair of side portions, where the pair of side portions connect the front portion and the back portion of the bra.

In yet another aspect, a bra is provided comprising a front portion, and a back portion. The back portion comprises at least a first layer of material having a superior edge forming an upper margin of the back portion and an inferior edge forming a lower margin of the back portion, a second layer of material positioned adjacent and external to the first layer of material to form a first pocket space, and a third layer of material positioned adjacent and external to the first layer of material to form a second pocket space. The bra further comprises a pair of side portions, where the pair of side portions connect the front portion and the back portion of the bra, and an underband portion extending from a lower margin of the front portion, the back portion, and the pair of side portions of the bra. The underband portion comprises at least a first layer of material and a second layer of material positioned adjacent and external to the first layer of material. A third pocket space is formed between the first layer of material and the second layer of material of the underband portion.

Although the term "bra" is used herein, it is contemplated that the term "bra" may apply to other types of support garments such as tank tops, camisoles with built-in support, swimming suit tops, body suits, and other styles or types of support garments used to support breast tissue. Further, positional terms used herein such as "superior," "inferior," "medial," "lateral," "upper," "lower," "side," "front," "back," and the like are to be given their common anatomical meaning with respect to the bra being worn by a hypothetical wearer standing in anatomical position. Further, the term "breast contacting surface" is meant to encompass any type of structure that is in contact with the wearer's breasts. For instance, each breast contacting surface may comprise a breast cup such as a molded cup, or an unmolded cup. The breast contacting surfaces may comprise separate distinct components with each contacting surface configured to cover or encapsulate a separate breast, or the breast contacting surfaces may comprise a unitary or continuous band of material that makes contact with both of the wearer's breasts. Any and all aspects, and any variation thereof, are contemplated as being within aspects herein. Still further, the phrase "configured to contact," when describing different portions of the bra in relation to a wearer refers to a bra appropriately sized for the particular wearer.

Turning now to FIGS. **1** and **2**, front and back views respectively of an exemplary bra **100** having storage pockets are shown in accordance with aspects herein. In exemplary aspects, the bra **100** comprises a front portion **110**, a back portion **112**, side portions **114/115**, an underband portion **116**, and shoulder straps **118/119**. In one aspect, the different portions **110**, **112**, **114/115**, **116**, and **118/119** may comprise separate constructions that are joined together at one or more seam lines using affixing technologies such as stitching, bonding, welding, adhesives, and the like. In other aspects, the different portions **110**, **112**, **114/115**, **116**, and **118/119** may comprise integral extensions of one another. For instance, a knitting or weaving process may be used to seamlessly and integrally knit or weave the different portions **110**, **112**, **114/115**, **116**, and **118/119** to form the bra **100**. In yet another aspect, one or more of the portions **110**, **112**, **114/115**, **116**, or **118/119** may be seamlessly and integrally knit or woven with another portion while remaining portions may comprise separate constructions that are joined to the integrally knit or woven portions using affixing technologies described herein. Any and all aspects, and any variation thereof, are contemplated as being within aspects herein.

Turning first to the front portion **110**, the front portion **110** is configured to contact at least a wearer's breasts when the bra **100** is in an as-worn configuration. In exemplary aspects, the front portion **110** may comprise a first breast contacting surface **120**, a second breast contacting surface **122**, and a central portion **124** positioned between the first and second breast contacting surfaces **120** and **122**. The front portion **110** further comprises at least an upper margin **126**, a lower margin **128**, and side margins **130** and **132**. The front portion **110** may be formed from one or materials configured to provide at least a moderate amount of compression to help support the wearer's breasts.

The back portion **112** is configured to contact at least a portion of the wearer's back torso when the bra **100** is in the as-worn configuration. In exemplary aspects, the back portion **112** may comprise a "racerback" style having at least an upper margin **210**, a lower margin **212**, and side margins **214** and **216**. The back portion **112** may be formed, in exemplary aspects, of a mesh material to provide breathability and air permeability to the bra **100** although uses of other types of materials are contemplated herein.

The bra further comprises side portions **114/115** configured to extend around the side torso areas of a wearer when the bra **100** is in the as-worn configuration. The side portions **114/115** connect the front portion **110** to the back portion **112** of the bra **100** around the torso of the wearer when the bra **100** is worn. More specifically, in exemplary aspects, the side portion **114** may be affixed to the front portion **110** at the side margin **130** of the front portion **110** and to the back portion **112** at the side margin **216** of the back portion **112**. Continuing, the side portion **115** may be affixed to the front portion **110** at the side margin **132** of the front portion **110** and to the back portion **112** at the side margin **214** of the back portion **112**. Thus, in some aspects, the margins **130**, **132**, **214**, and **216** may comprise "seam lines," "seams," or areas where two or more panels of material are joined together using affixing technologies described herein. However, it is also contemplated herein that when the front portion **110**, side portions **114/115** and back portion **112** comprise integrally knit or woven extensions of each other, the different margins **130**, **132**, **214**, and **216** may comprise lines of demarcation between the different portions created via a knitting process, a weaving process, and the like. In other words, the different margins **130**, **132**, **214**, and **216** may comprise areas where two or more layers of material are joined together via a knitting process, a weaving process, and the like, to create boundaries for the various pockets described herein. Any and all aspects, and any variation thereof, are contemplated as being within aspects herein.

Continuing, the side portions **114/115** may each comprise an upper margin **133** and a lower margin **135**. In exemplary aspects, some or all of the side portions **114/115** may be formed of a mesh material to provide breathability and air permeability to the bra **100** although uses of other types of materials are contemplated herein.

The shoulder straps **118/119** of the bra **100** are configured to extend over the shoulder areas of the wearer when the bra **100** is in the as-worn configuration. However, it is also contemplated herein that the shoulder straps **118/119** may be optional. When not used, the bra **100** would assume a bandeau style garment. When used, the shoulder straps

118/119 also help to connect the front portion 110 to the back portion 112. More particularly, in exemplary aspects, the shoulder strap 118 may be affixed to the front portion 110 at seam line 134 and to the back portion 112 at seam line 220, and the shoulder strap 119 may be affixed to the front portion 110 at the seam line 136 and to the back portion 112 at seam line 218. However, it is also contemplated herein that the shoulder straps 118/119 may comprise integrally knit or woven extensions of the front portion 110 and/or the back portion 112. In this instance, the seam lines 134, 136, 218, and 220 may comprise lines of demarcation between the different portions of the bra 100 created via, for instance, a knitting or weaving process. Any and all aspects, and any variation thereof, are contemplated as being within aspects herein.

Further, in exemplary aspects, the shoulder straps 118/119 may be formed of a low-stretch material so as to provide further support to the wearer's breasts when the bra 100 is in the as-worn configuration. Additionally, in an exemplary aspects, the shoulder straps 118/119 may optionally comprise a first loop 138 positioned on the shoulder strap 118 and/or a second loop 139 positioned on the second shoulder strap 119. The first and second loops 138/139 may be formed from the same material or a different material from that used to form the shoulder straps 118/119 and may be used to secure, for instance, straws for water bladders, or wires for headphones.

The bra 100 additionally comprises the underband portion 116, where the underband portion 116 is configured to extend circumferentially around the torso area of the wearer when the bra 100 is in the as-worn configuration. In exemplary aspects, the underband portion 116 extends from the lower margin 128 of the front portion 110, the lower margins 135 of the side portions 114/115, and the lower margin 212 of the back portion 112. The underband portion 116 comprises an upper margin 140 and a lower margin 142. In exemplary aspects, the underband portion 116 may be formed from the same material used to form, for instance the front portion 110. The material may exhibit some degree of elastic resilience to help tension the underband portion 116 against the torso of a wearer when the bra 100 is worn. In some aspects, an additional elastically resilient band may be used in the underband portion 116 to provide further tensioning when the bra 100 is worn.

The bra 100 comprises a number of different storage pockets in accordance with aspects herein. For instance, with respect to FIG. 1, the bra 100 may comprise pocket 150 having an opening 151 positioned at the upper margin 140 of the underband portion 116. In exemplary aspects, the opening 151 to the pocket 150 may be positioned generally inferior to the central portion 124 of the front portion 110. In other words, the opening 151 may be generally vertically aligned with the central portion 124 of the bra 100. The opening 151 may comprise a first end 152 and a second end 153 that define the length of the opening 151.

Still referring to FIG. 1, the bra 100 may comprise pocket 154 having an opening 155 positioned adjacent to the upper margin 126 of the front portion 110. In exemplary aspects, the opening 155 may extend the length of the upper margin 126 of the front portion 110 to provide the wearer with easy access to the storage pocket 154. Continuing, and with respect to FIGS. 1 and 2, the bra 100 further comprises pocket 156 located at side portion 114 and pocket 158 located at side portion 115. The pocket 156 comprises opening 157 positioned at the upper margin 133 of side portion 114, and the pocket 158 comprises opening 159 at the upper margin 133 of side portion 115. In exemplary aspects, the openings 157 and 159 may extend along the length of the upper margin 133 of side portions 114 and 115. Further, it is contemplated herein, that the bra 100 may comprise just one of the pockets 156 and/or 158 or both the pockets 156 and 158. Any and all aspects, and any variation thereof, are contemplated as being within aspects herein.

The bra 100 may additionally comprise pocket 222 having an opening 223 located on the back portion 112 of the bra 100. The opening 223 may be offset from and inferior to the upper margin 210 of the back portion 112. Additionally, the back portion 112 may comprise a second pocket 224 having an opening 225. The opening 225 to the second pocket 224 may be offset from and inferior to the opening 223 of the pocket 222. In exemplary aspects, both the opening 223 and the opening 225 may extend across the width of the back portion 112. The various openings 151, 155, 157, 159, 223, and 225 to the pockets 150, 154, 156, 158, 222, and 224 described herein may be reinforced with, for example, seam tape, elasticized tape, piping, additional fabric, and the like to facilitate enhanced durability of the bra 100 through repeated use of the various pockets 150, 154, 156, 158, 222, and 224.

The pockets 150, 154, 156, 158, 222, and 224 and their associated openings 151, 155, 157, 159, 223, and 225 are strategically located to provide the wearer of the bra 100 with different placement options for stowing items in accordance with preferences of the wearer. Moreover, the size of the pockets 150, 154, 156, 158, 222, and 224 and their associated openings 151, 155, 157, 159, 223, and 225 are configured to vary in size to provide secure storage for different sized items. Some examples of different use configurations are shown in FIGS. 3-6. FIGS. 3-4 depict front views of the bra 100 being worn by a wearer in accordance with aspects herein. With respect to FIG. 3, an item 310, in the form of an identification card, is shown as being stowed within the pocket 150. FIG. 4 illustrates an item 410, in the form of a cell phone, being stowed within the pocket 154, and an item 412, in the form of a set of keys, also being stowed within the pocket 154.

FIG. 5 depicts a side view of the bra 100 being worn. An item 510, in the form of ear buds, is shown being stowed in the pocket 158. FIG. 6, which depicts a back view of the bra 100 being worn by the wearer, illustrates an item 610, in the form of a water bottle, being stowed in the pocket 222, and an item 612, in the form of money, being stowed in the second pocket 224. The items shown in FIGS. 3-6 are exemplary only and are provided to illustrate the different uses of the pockets 150, 154, 156, 158, 222, and 224. Other types of stowable items are contemplated as being within the scope herein.

Turning now to FIG. 7, an exploded view of the front portion 110 of the bra 100 is provided in accordance with aspects herein. As discussed above, the various pockets of the bra 100 are constructed by forming the different portions of the bra 100 of two or more layers of material. The pocket space is formed between the layers of material, and an opening to the pocket space is formed by discontinuously affixing the perimeter edges of the different portions at select areas. With respect to FIG. 7, the front portion 110 comprises at least a first layer of material 710 and a second layer of material 712. The first layer of material 710 is defined by at least perimeter edges 714, 716, 718, and 720. Perimeter edges 714 and 716 oppose each other and help to define the side margins 130 and 132 of the front portion 110 respectively. Perimeter edges 718 and 720 also oppose each other. Perimeter edge 718 helps to define the lower margin 128 of

the front portion **110**, and perimeter edge **720** helps to define the upper margin **126** of the front portion **110**.

The second layer of material **712** is configured to be positioned adjacent and external to the first layer of material **710** when the bra **100** is assembled such that respective surfaces of each are positioned adjacent to each other. The second layer of material **712** is defined by at least perimeter edges **722**, **724**, **726**, and **728**. Perimeter edges **722** and **724** oppose each other and further help to define the side margins **130** and **132** of the front portion **110** respectively. Perimeter edges **726** and **728** also oppose each other. Perimeter edge **726** further helps to define the lower margin **128** of the front portion **110**, and perimeter edge **728** further helps to define the upper margin **126** of the front portion **110**.

When assembled, the perimeter edge **722** of the second layer of material **712** may be affixed to the perimeter edge **714** of the first layer of material **710** along their respective lengths using affixing technologies known in the art (e.g., stitching, bonding, adhesives, and the like). When the different bra portions comprise integrally knit or woven extensions of each other, the perimeter edge **722** and the perimeter edge **714** may be more accurately described as boundaries, where the boundaries are integrally knit or woven to each other along their respective lengths to define the boundaries of the different pocket spaces. Thus, as used herein, the term "affixing" may also mean integrally knitting or weaving one or more perimeter edges or boundaries to each other to create lines of demarcation between the different bra portions and to define boundaries for the different pockets described herein.

Continuing, the perimeter edge **724** may be affixed to the perimeter edge **716** of the first layer of material **710** along their respective lengths, and the perimeter edge **726** of the second layer of material **712** may be affixed to the perimeter edge **718** of the first layer of material **710** along their respective lengths. The pocket **154** is formed between the two layers of material **710/712**. As such, the pocket **154** extends without interruption between the two layers of material **710/712** forming the front portion **110**. To put it another way, the pocket **154** extends without interruption between the two layers of material **710/712** from the side margin **130** to the side margin **132**. The opening **155** to the pocket **154** is formed by not affixing the perimeter edge **720** of the first layer of material **710** to the perimeter edge **728** of the second layer of material **712** along their respective lengths. This construction provides a large opening and easy access to the pocket **154**. However, it is contemplated herein, that at least a portion of the perimeter edge **720** may be affixed to at least a portion of the perimeter edge **728** to provide a smaller opening **155** to the pocket **154**. Any and all aspects, and any variation thereof, are contemplated as being within aspects herein.

With respect to FIG. **8**, an exploded view of the back portion **112** is illustrated in accordance with aspects herein. More specifically, FIG. **8** is provided to illustrate how the pocket **222** is formed. The back portion **112** comprises a first layer of material **810**, which may be an elastically resilient mesh material for air permeability and breathability that is defined by at least perimeter edges **812**, **814**, **816**, **818**, **820**, and **822**. The perimeter edge **812** comprises the upper margin **210** of the back portion **112**, while the perimeter edge **814** comprises the lower margin **212** of the back portion **112**. The perimeter edges **816** and **818** comprise the side margins **214** and **216** of the back portion **112**. The perimeter edges **820** and **822** help to form or define the armholes of the bra **100**.

The pocket **222** is formed by positioning a second layer of material **824**, which may be an elastically resilient mesh material, adjacent and external to the first layer of material **810** such that the respective surfaces of each are adjacent to each other to define a pocket space therebetween. The second layer of material **824** is defined by perimeter edges **826**, **828**, **830** and **832**. The perimeter edges **826** and **828** oppose each other and define side margins of the second layer of material **824**. The perimeter edge **830** defines a lower margin of the second layer of material **824**, and the perimeter edge **832**, which opposes the perimeter edge **830**, defines an upper margin of the second layer of material **824**. When assembled, the perimeter edges **826** and **828** of the second layer of material **824** are affixed to an upper portion of the perimeter edges **820** and **822** of the first layer of material **810** along their respective lengths, and the perimeter edge **830** of the second layer of material **824** is affixed to the first layer of material **810** along its respective length at a location approximately one-third the distance from the perimeter edge **812** to the perimeter edge **814** as measured with respect to the perimeter edge **812**. To form the opening **223**, the perimeter edge **832** of the second layer of material **824** is not affixed (or is unaffixed) to the first layer of material **810** to provide access to the pocket **222**. When assembled, the opening **223** is offset from or spaced apart from the upper margin **210** of the back portion **112** by a distance of approximately 1 cm, 2 cm, 3 cm, up to 10 cm.

Turning now to FIG. **9**, a second exploded view of the back portion **112** is provided in accordance with aspects herein. More specifically, FIG. **9** is provided to illustrate how the second pocket **224** is formed. The first layer of material **810** is shown with its perimeter edges **812**, **814**, **816**, **818**, **820**, and **822**. A third layer of material **910**, which may be an elastically resilient mesh material, is also shown, where the third layer of material **910** is defined by at least perimeter edges **912**, **914**, **916**, and **918**. The perimeter edges **912** and **914** generally oppose each other and define side margins of the third layer of material **910**. The perimeter edge **916** comprises a lower margin of the third layer of material **910**, and the perimeter edge **918** comprises an upper margin of the third layer of material **910**.

The second pocket **224** is formed by positioning the third layer of material **910** adjacent and external to the first layer of material **810** such that the respective surfaces of each are adjacent to each other to define a pocket space therebetween. When assembled, the perimeter edges **912** and **914** of the third layer of material **910** are affixed the first layer of material **810** along their respective lengths, and the perimeter edge **916** of the third layer of material **910** is affixed to the perimeter edge **814** of the first layer of material **810** along its respective length. To form the opening **225**, the perimeter edge **918** of the third layer of material **910** is not affixed (or is unaffixed) to the first layer of material **810** to provide access to the second pocket **224**.

It is contemplated herein that the perimeter edge **830** of the second layer of material **824** is coincident with, or aligned with, the perimeter edge **918** of the third layer of material **910** such that the opening **225** is generally aligned with the perimeter edge **830** of the second layer of material **824**. To describe it another way, it is contemplated herein that the second layer of material **824** does not substantially overlap with the third layer of material **910** such that the pocket **222** does not significantly overlap with the second pocket **224**. This holds true even though at least one edge of the pocket **222** may align with at least one edge of the second pocket **224**. This construction allows for two distinct pocket spaces with separate access to each so that a wearer can

separately stow items in the pockets **222** and **224** with unnecessary interference between the pockets **222** and **224**.

FIG. **10** illustrates an exploded view of the side portion **114** of the bra **100** in accordance with aspects herein. The description of FIG. **10** would be equally applicable to the side portion **115** of the bra **100**. FIG. **10** is specifically provided to illustrate how the pocket **156** is formed. The side portion **114** comprises a first layer of material **1010** and a second layer of material **1012**. In exemplary aspects, both the first layer of material **1010** and the second layer of material **1012** may comprise an elastically resilient mesh material for breathability and air permeability. It is also contemplated herein that just the second layer of material **1012** may comprise an elastically resilient mesh material, or just the first layer of material **1010** may comprise an elastically resilient mesh material. The first layer of material **1010** is defined by perimeter edges **1014**, **1016**, **1018**, and **1020**. The perimeter edges **1014** and **1016** oppose each other and define front and back margins respectively when the side portion **114** is incorporated into the bra **100**. The perimeter edge **1020** comprises at least in part the upper margin **133** of the side portion **114**, and the perimeter edge **1022** comprises at least in part the lower margin **135** of the side portion **114** of the bra **100**.

The second layer of material **1012** is defined by perimeter edges **1022**, **1024**, **1026**, and **1028**. The perimeter edges **1022** and **1024** oppose each other and define front and back margins respectively when the side portion **114** is incorporated into the bra **100**. The perimeter edge **1028** comprises at least in part the upper margin **133** of the side portion **114**, and the perimeter edge **1026** comprises at least in part the lower margin **135** of the side portion **114** of the bra **100**.

To form the pocket **156**, the second layer of material **1012** is positioned adjacent and external to the first layer of material **1010** such that their respective surfaces are positioned adjacent to each other to define a pocket space therebetween. When assembled, the perimeter edge **1022** of the second layer of material **1012** is affixed along its length to the perimeter edge **1014** of the first layer of material **1010**. It is further contemplated herein, that the perimeter edges **1014** and **1022** are affixed to the perimeter edges **714** and **722** of the first and second layers **710/712** of the front portion **110** to form side margin **130**. Similarly, the perimeter edge **1024** of the second layer of material **1012** is affixed along its length to the perimeter edge **1016** of the first layer of material **1010**. It is further contemplated herein, that the perimeter edges **1016** and **1024** are affixed to the perimeter edge **818** of the first layer of material **810** of the back portion **112** to form side margin **216**.

Continuing, when assembled, the aperimeter edge **1026** of the second layer of material **1012** is affixed along its length to the perimeter edge **1018** of the first layer of material **1010**. To form the opening **157** to the pocket **156**, the perimeter edge **1028** of the second layer of material **1012** is not affixed (or is unaffixed) to the perimeter edge **1020** of the first layer of material **1010** along its length to provide access to the pocket **156**.

FIG. **11**A and FIG. **11**B illustrate an exemplary construction for the underband portion **116** of the bra **100** in accordance with aspects herein. FIG. **11**A illustrates a layer of material **1100** in an unfolded state. The layer of material **1100** may be defined by perimeter edge **1110**, perimeter edge **1112**, and perimeter edges **1114** and **1116**. The layer of material **1100** may be bisected along its length by a hypothetical fold line **1118**. As illustrated in FIG. **11**B, to assemble the underband portion **116** and to form the pocket **150**, the layer of material **1100** may be folded along the hypothetical fold line **1118** such that the perimeter edge **1112** is aligned with or is coincident with the perimeter edge **1110**. The perimeter edge **1112** may then be discontinuously affixed to the perimeter edge **1110** as indicated by the arrows (i.e., the arrows represent areas where the edges **1110** and **1112** are affixed.) The area where the perimeters edges **1110** and **1112** are not affixed (or unaffixed) comprises the opening **151** to the pocket **150**. Reference numerals **152** and **153** denote the boundaries of the opening **151**. It is contemplated herein, that the opening **151** may extend along a greater length of the underband portion **116** than shown. It is also contemplated herein, that more than one opening may be formed by discontinuously affixing the perimeter edges **1110** and **1112** at other pre-selected areas. Any and all aspects, and any variation thereof, are contemplated as being within aspects herein.

To affix the underband portion **116** to the bra **100**, the perimeter edge **1110** may be affixed along its length to the lower margin **128** of the front portion **110**, the lower margins **135** of the side portions **114** and **115**, and the lower margin **212** of the back portion **112**. However, to maintain the opening **151** to the pocket **150**, the perimeter edge **1112** may be continuously affixed to the lower margins **135** of the side portions **114** and **115** and to the lower margin **212** of the back portion **112** but be discontinuously affixed to the lower margin **128** of the front portion **110**. In other words, the perimeter edge **1112** may not be affixed (or unaffixed) to the lower margin **128** of the front portion **110** where the opening **151** is desired to be maintained.

This aspect is shown in FIGS. **12** and **13**, where FIG. **12** represents a cross-sectional view taken along cut line **12-12** of FIG. **1**, and FIG. **13** represents a cross-sectional view taken along cut line **13-13** of FIG. **1** in accordance with aspects herein. With respect to FIG. **12**, the perimeter edges **1110** and **1112** of the layer of material **1100** forming the underband portion **116** are both shown being affixed to the perimeter edges **1018** and **1026** of the first and second layers of material **1010** and **1012** respectively of the side portion **114**. FIG. **12** further illustrates the pocket **158** formed between the layers of material **1010/1012** in the side portion **114**, and the pocket **150** formed when the layer of material **1100** is folded to form the underband portion **116**. In exemplary aspects, the pocket **150** may be configured to extend around the circumference of the underband portion **116**.

With respect to FIG. **13**, the cross-sectional view is taken along the front portion **110** of the bra **100** in an area corresponding to the central portion **124** between the breast contacting surfaces **120** and **122**. In this view, just the perimeter edge **1110** of the layer of material **1100** forming the underband portion **116** is affixed to the first and second layers of material **710/712** of the front portion **110** via the perimeter edges **718** and **726** of the layers **710/712**. The perimeter edge **1112** of the layer of material **1100** is unaffixed to form the opening **151** to the pocket **150**. FIG. **13** further illustrates the pocket **154** formed between the first and second layers of material **710/712** forming the front portion **110**.

Returning to FIG. **11**B, as mentioned, the layer of material **1100** forming the underband portion **116** may comprise an elastically resilient material. To augment the elastic nature of the underband portion **116** an optional elastically resilient band **1120** may be positioned in the pocket **150** adjacent the lower margin **142** of the underband portion **116** (although other locations are contemplated herein).

With continued respect to the underband portion **116**, although described as being formed from a layer of material

that is folded along a hypothetical fold line, it is also contemplated herein, that the underband portion **116** may be formed from two or more layers of material that are joined together along their perimeter edges. Any and all aspects, and any variation thereof, are contemplated as being within aspects herein.

Aspects of the present disclosure have been described with the intent to be illustrative rather than restrictive. Alternative aspects will become apparent to those skilled in the art that do not depart from its scope. A skilled artisan may develop alternative means of implementing the aforementioned improvements without departing from the scope of the present invention.

It will be understood that certain features and subcombinations are of utility and may be employed without reference to other features and subcombinations and are contemplated within the scope of the claims. Not all steps listed in the various figures need be carried out in the specific order described.

What is claimed is:

1. A bra comprising:

a front portion;

a back portion connected to the front portion;

an underband extending from a lower margin of the front portion and the back portion, at least a first portion of the underband comprising a first layer of material and a second layer of material positioned adjacent and external to the first layer of material; and

a pocket space formed between the first layer of material and the second layer of material of the underband wherein:

an upper edge of the second layer of material is continuously affixed to an upper edge of the first layer of material except for at a first location at a front aspect of the bra to form a pocket opening to the pocket space.

2. The bra of claim **1**, wherein the front portion comprises at least a first breast contacting surface, a second breast contacting surface, and a central portion located between the first breast contacting surface and the second breast contacting surface.

3. The bra of claim **2**, wherein the pocket opening to the pocket space is positioned inferior to the central portion.

4. The bra of claim **1**, wherein the pocket space extends along at least a portion a length of the underband.

5. A bra comprising:

a front portion;

a back portion connected to the front portion at sides of the bra; and

an underband extending from a lower margin of the front portion and the back portion, at least a first portion of the underband comprising a first layer of material and a second layer of material positioned adjacent and external to the first layer of material to form a pocket space therebetween, the first layer of material having a perimeter edge that is continuously affixed to at least the lower margin of the front portion, the second layer of material having a perimeter edge that is continuously affixed to at least the lower margin of the front portion except for at a first area where the perimeter edge of the second layer of material is unaffixed from the lower margin of the front portion to form a pocket opening to the pocket space formed between the first layer of material and the second layer of material.

6. The bra of claim **5**, wherein the first layer of material further has a second perimeter edge, wherein the second layer of material further has a second perimeter edge, and wherein the second perimeter edge of the first layer of material is affixed to the second perimeter edge of the second layer of material at a lower margin of the underband.

7. The bra of claim **5**, wherein at least the first layer of material comprises a knit textile.

8. The bra of claim **5**, wherein the perimeter edge of the first layer of material is affixed to the lower margin of the front portion via stitching.

9. The bra of claim **8**, wherein the perimeter edge of the second layer of material is affixed to the lower margin of the front portion via stitching.

10. The bra of claim **5**, wherein the front portion of the bra comprises a first breast contacting surface and a second breast contacting surface, and wherein a central area of the front portion is located between the first breast contacting surface and the second breast contacting surface.

11. The bra of claim **10**, wherein the pocket opening is positioned inferior to the central portion.

12. A bra comprising:

a front portion;

a back portion connected to the front portion at the bra sides;

a pair of shoulder straps that connect the front portion and the back portion; and

an underband extending from a lower margin of the front portion and the back portion, wherein the underband extending from the lower margin of the front portion comprises at least a first layer of material and a second layer of material positioned adjacent and external to the first layer of material to form a pocket space therebetween, wherein:

the first layer of material has a perimeter edge that is continuously affixed to the lower margin of the front portion, and

the second layer of material has a perimeter edge that is continuously affixed to at least the lower margin of the front portion except for a first area where the perimeter edge of the second layer of material is unaffixed to the lower margin of the front portion to form a pocket opening to the pocket space formed between the first layer of material and the second layer of material.

13. The bra of claim **12**, wherein the underband extending from the lower margin of the back portion of the bra further comprises at least the first layer of material.

14. The bra of claim **12**, wherein the pocket opening to the pocket space is reinforced with an additional material.

15. The bra of claim **14**, wherein the additional material comprises a fabric material.

16. The bra of claim **12**, wherein the pocket opening to the pocket space is located inferior to a central area of the front portion.

17. The bra of claim **12**, wherein the perimeter edge of the first layer of material and the perimeter edge of the second layer of material are affixed to the lower margin of the front portion using stitching.

* * * * *