8493896

THE UNITED STATES OF AMERICA

TO ALL TO WHOM THESE PRESENTS SHALL COME:

UNITED STATES DEPARTMENT OF COMMERCE

United States Patent and Trademark Office

May 31, 2024

THIS IS TO CERTIFY THAT ANNEXED IS A TRUE COPY FROM THE RECORDS OF THIS OFFICE OF THE FILE WRAPPER AND CONTENTS OF:

APPLICATION NUMBER: ***15/679,206***
FILING DATE: ***August 17, 2017***
PATENT NUMBER: ***10219550***
ISSUE DATE: ***March 05, 2019***

Certified by

Katherine Kelly Vidal

Performing the Functions and Duties of the
Under Secretary of Commerce
for Intellectual Property
and Director of the United States
Patent and Trademark Office

NIKE-1008
p. 1

PTO/SB/08a (01-10)
Approved for use through 07/31/2012. OMB 0651-0031
U.S. Patent and Trademark Office; U.S. DEPARTMENT OF COMMERCE
Under the Paperwork Reduction Act of 1995, no persons are required to respond to a collection of information unless it contains a valid OMB control number.

INFORMATION DISCLOSURE STATEMENT BY APPLICANT

(Not for submission under 37 CFR 1.99)

Application Number	
Filing Date	
First Named Inventor	Sharon Goff
Art Unit	
Examiner Name	
Attorney Docket Number	17-095-SG

U.S.PATENTS Remove

Examiner Initial*	Cite No	Patent Number	Kind Code[1]	Issue Date	Name of Patentee or Applicant of cited Document	Pages,Columns,Lines where Relevant Passages or Relevant Figures Appear
	1	7585200		2009-09-08	Mclaren	
	2	4699144		1987-10-13	Sherwood	
	3	5395280		1995-03-07	Greenberg	
	4	4263678		1981-04-28	Off	
	5	3747545		1973-07-24	Nicolay et al.	
	6	8257140		2012-09-04	Kenny	
	7	7753759		2010-07-13	Pintor et al.	
	8	5496205		1996-03-05	Lee	

INFORMATION DISCLOSURE STATEMENT BY APPLICANT (Not for submission under 37 CFR 1.99)	Application Number	
	Filing Date	
	First Named Inventor	Sharon Goff
	Art Unit	
	Examiner Name	
	Attorney Docket Number	17-095-SG

	9	5799336		1998-09-01	Cooper	
	10	2624881		1953-01-13	Dunson	
	11	8597072		2013-12-03	Lucas	

If you wish to add additional U.S. Patent citation information please click the Add button. Add

U.S.PATENT APPLICATION PUBLICATIONS Remove

Examiner Initial*	Cite No	Publication Number	Kind Code[1]	Publication Date	Name of Patentee or Applicant of cited Document	Pages,Columns,Lines where Relevant Passages or Relevant Figures Appear
	1					

If you wish to add additional U.S. Published Application citation information please click the Add button. Add

FOREIGN PATENT DOCUMENTS Remove

Examiner Initial*	Cite No	Foreign Document Number[3]	Country Code[2] i	Kind Code[4]	Publication Date	Name of Patentee or Applicant of cited Document	Pages,Columns,Lines where Relevant Passages or Relevant Figures Appear	T[5]
	1							

If you wish to add additional Foreign Patent Document citation information please click the Add button Add

NON-PATENT LITERATURE DOCUMENTS Remove

Examiner Initials*	Cite No	Include name of the author (in CAPITAL LETTERS), title of the article (when appropriate), title of the item (book, magazine, journal, serial, symposium, catalog, etc), date, pages(s), volume-issue number(s), publisher, city and/or country where published.	T[5]
	1		

INFORMATION DISCLOSURE STATEMENT BY APPLICANT (Not for submission under 37 CFR 1.99)	Application Number	
	Filing Date	
	First Named Inventor	Sharon Goff
	Art Unit	
	Examiner Name	
	Attorney Docket Number	17-095-SG

If you wish to add additional non-patent literature document citation information please click the Add button Add

EXAMINER SIGNATURE

Examiner Signature		Date Considered	

*EXAMINER: Initial if reference considered, whether or not citation is in conformance with MPEP 609. Draw line through a citation if not in conformance and not considered. Include copy of this form with next communication to applicant.

[1] See Kind Codes of USPTO Patent Documents at www.USPTO.GOV or MPEP 901.04. [2] Enter office that issued the document, by the two-letter code (WIPO Standard ST.3). [3] For Japanese patent documents, the indication of the year of the reign of the Emperor must precede the serial number of the patent document. [4] Kind of document by the appropriate symbols as indicated on the document under WIPO Standard ST.16 if possible. [5] Applicant is to place a check mark here if English language translation is attached.

INFORMATION DISCLOSURE STATEMENT BY APPLICANT (Not for submission under 37 CFR 1.99)	Application Number	
	Filing Date	
	First Named Inventor	Sharon Goff
	Art Unit	
	Examiner Name	
	Attorney Docket Number	17-095-SG

CERTIFICATION STATEMENT

Please see 37 CFR 1.97 and 1.98 to make the appropriate selection(s):

That each item of information contained in the information disclosure statement was first cited in any communication from a foreign patent office in a counterpart foreign application not more than three months prior to the filing of the information disclosure statement. See 37 CFR 1.97(e)(1).

OR

☐ That no item of information contained in the information disclosure statement was cited in a communication from a foreign patent office in a counterpart foreign application, and, to the knowledge of the person signing the certification after making reasonable inquiry, no item of information contained in the information disclosure statement was known to any individual designated in 37 CFR 1.56(c) more than three months prior to the filing of the information disclosure statement. See 37 CFR 1.97(e)(2).

See attached certification statement.

The fee set forth in 37 CFR 1.17 (p) has been submitted herewith.

☒ A certification statement is not submitted herewith.

SIGNATURE

A signature of the applicant or representative is required in accordance with CFR 1.33, 10.18. Please see CFR 1.4(d) for the form of the signature.

Signature	/David J. Connaughton, Jr./	Date (YYYY-MM-DD)	2016-02-16
Name/Print	David J. Connaughton, Jr.	Registration Number	67275

This collection of information is required by 37 CFR 1.97 and 1.98. The information is required to obtain or retain a benefit by the public which is to file (and by the USPTO to process) an application. Confidentiality is governed by 35 U.S.C. 122 and 37 CFR 1.14. This collection is estimated to take 1 hour to complete, including gathering, preparing and submitting the completed application form to the USPTO. Time will vary depending upon the individual case. Any comments on the amount of time you require to complete this form and/or suggestions for reducing this burden, should be sent to the Chief Information Officer, U.S. Patent and Trademark Office, U.S. Department of Commerce, P.O. Box 1450, Alexandria, VA 22313-1450. DO NOT SEND FEES OR COMPLETED FORMS TO THIS ADDRESS. **SEND TO: Commissioner for Patents, P.O. Box 1450, Alexandria, VA 22313-1450.**

Privacy Act Statement

The Privacy Act of 1974 (P.L. 93-579) requires that you be given certain information in connection with your submission of the attached form related to a patent application or patent. Accordingly, pursuant to the requirements of the Act, please be advised that: (1) the general authority for the collection of this information is 35 U.S.C. 2(b)(2); (2) furnishing of the information solicited is voluntary; and (3) the principal purpose for which the information is used by the U.S. Patent and Trademark Office is to process and/or examine your submission related to a patent application or patent. If you do not furnish the requested information, the U.S. Patent and Trademark Office may not be able to process and/or examine your submission, which may result in termination of proceedings or abandonment of the application or expiration of the patent.

The information provided by you in this form will be subject to the following routine uses:

1. The information on this form will be treated confidentially to the extent allowed under the Freedom of Information Act (5 U.S.C. 552) and the Privacy Act (5 U.S.C. 552a). Records from this system of records may be disclosed to the Department of Justice to determine whether the Freedom of Information Act requires disclosure of these record s.

2. A record from this system of records may be disclosed, as a routine use, in the course of presenting evidence to a court, magistrate, or administrative tribunal, including disclosures to opposing counsel in the course of settlement negotiations.

3. A record in this system of records may be disclosed, as a routine use, to a Member of Congress submitting a request involving an individual, to whom the record pertains, when the individual has requested assistance from the Member with respect to the subject matter of the record.

4. A record in this system of records may be disclosed, as a routine use, to a contractor of the Agency having need for the information in order to perform a contract. Recipients of information shall be required to comply with the requirements of the Privacy Act of 1974, as amended, pursuant to 5 U.S.C. 552a(m).

5. A record related to an International Application filed under the Patent Cooperation Treaty in this system of records may be disclosed, as a routine use, to the International Bureau of the World Intellectual Property Organization, pursuant to the Patent Cooperation Treaty.

6. A record in this system of records may be disclosed, as a routine use, to another federal agency for purposes of National Security review (35 U.S.C. 181) and for review pursuant to the Atomic Energy Act (42 U.S.C. 218(c)).

7. A record from this system of records may be disclosed, as a routine use, to the Administrator, General Services, or his/her designee, during an inspection of records conducted by GSA as part of that agency's responsibility to recommend improvements in records management practices and programs, under authority of 44 U.S.C. 2904 and 2906. Such disclosure shall be made in accordance with the GSA regulations governing inspection of records for this purpose, and any other relevant (i.e., GSA or Commerce) directive. Such disclosure shall not be used to make determinations about individuals.

8. A record from this system of records may be disclosed, as a routine use, to the public after either publication of the application pursuant to 35 U.S.C. 122(b) or issuance of a patent pursuant to 35 U.S.C. 151. Further, a record may be disclosed, subject to the limitations of 37 CFR 1.14, as a routine use, to the public if the record was filed in an application which became abandoned or in which the proceedings were terminated and which application is referenced by either a published application, an application open to public inspections or an issued patent.

9. A record from this system of records may be disclosed, as a routine use, to a Federal, State, or local law enforcement agency, if the USPTO becomes aware of a violation or potential violation of law or regulation.

PTO/AIA/82A (07-12)
Approved for use through 11/30/2014. OMB 0651-0035
U.S. Patent and Trademark Office; U.S. DEPARTMENT OF COMMERCE
Under the Paperwork Reduction Act of 1995, no persons are required to respond to a collection of information unless it displays a valid OMB control number.

TRANSMITTAL FOR POWER OF ATTORNEY TO ONE OR MORE REGISTERED PRACTITIONERS

NOTE: This form is to be submitted with the Power of Attorney by Applicant form (PTO/AIA/82B or equivalent) to identify the application to which the Power of Attorney is directed, in accordance with 37 CFR 1.5. If the Power of Attorney by Applicant form is not accompanied by this transmittal form or an equivalent, the Power of Attorney will not be recognized in the application.

Application Number	
Filing Date	
First Named Inventor	Sharon Goff
Title	POCKET BRA SYSTEM
Art Unit	
Examiner Name	
Attorney Docket Number	17-095-SG

SIGNATURE of Applicant or Patent Practitioner

Signature	/David J. Connaughton, Jr./	Date	
Name	David J. Connaughton, Jr.	Telephone	
Registration Number	67275		

NOTE: This form must be signed in accordance with 37 CFR 1.33. See 37 CFR 1.4(d) for signature requirements and certifications.

☐ *Total of 1 forms are submitted.

This collection of information is required by 37 CFR 1.31, 1.32 and 1.33. The information is required to obtain or retain a benefit by the public which is to file (and by the USPTO to process) an application. Confidentiality is governed by 35 U.S.C. 122 and 37 CFR 1.11 and 1.14. This collection is estimated to take 3 minutes to complete, including gathering, preparing, and submitting the completed application form to the USPTO. Time will vary depending upon the individual case. Any comments on the amount of time you require to complete this form and/or suggestions for reducing this burden, should be sent to the Chief Information Officer, U.S. Patent and Trademark Office, U.S. Department of Commerce, P.O. Box 1450, Alexandria, VA 22313-1450. DO NOT SEND FEES OR COMPLETED FORMS TO THIS ADDRESS. **SEND TO: Commissioner for Patents, P.O. Box 1450, Alexandria, VA 22313-1450.**

If you need assistance in completing the form, call 1-800-PTO-9199 and select option 2.

PTO/AIA/82B(07-12)
Approved for use through 11/30/2014. OMB 0651-0035
U.S. Patent and Trademark Office; U.S. DEPARTMENT OF COMMERCE
Under the Paperwork Reduction Act of 1995, no persons are required to respond to a collection of information unless it displays a valid OMB control number.

POWER OF ATTORNEY BY APPLICANT

I hereby revoke all previous powers of attorney given in the application identified in the attached transmittal letter.

[x] I hereby appoint Practitioner(s) associated with the following Customer Number as my/our attorney(s) or agent(s), and to transact all business in the United States Patent and Trademark Office connected therewith for the application referenced in the attached transmittal letter (form PTO/AIA/82A or equivalent): 32118

OR

[ ] I hereby appoint Practitioner(s) named below as my/our attorney(s) or agent(s), and to transact all business in the United States Patent and Trademark Office connected therewith for the application referenced in the attached transmittal letter (form PTO/AIA/82A or equivalent):

Name	Registration Number	Name	Registration Number

Please recognize or change the correspondence address for the application identified in the attached transmittal letter to:

[x] The address associated with the above-mentioned Customer Number.

OR

[ ] The address associated with Customer Number:

OR

[ ] Firm or Individual Name					
Address					
City		State		Zip	
Country					
Telephone		Email			

I am the Applicant:

[x] Inventor or Joint Inventor

[ ] Legal Representative of a Deceased or Legally Incapacitated Inventor

[ ] Assignee or Person to Whom the Inventor is Under an Obligation to Assign

[ ] Person Who Otherwise Shows Sufficient Proprietary Interest (*e.g.,* a petition under 37 CFR 1.46(b)(2) was granted in the application or is concurrently being filed with this document)

SIGNATURE of Applicant for Patent

Signature	/Sharon Goff/	Date	2/4/16
Name	Sharon Goff	Telephone	
Title and Company			

NOTE: Signature - This form must be signed by the applicant in accordance with 37 CFR 1.33. See 37 CFR 1.4 for signature requirements and certifications. Submit multiple forms for more than one signature, see below *.

[ ] *Total of 1 forms are submitted.

This collection of information is required by 37 CFR 1.31, 1.32 and 1.33. The information is required to obtain or retain a benefit by the public which is to file (and by the USPTO to process) an application. Confidentiality is governed by 35 U.S.C. 122 and 37 CFR 1.11 and 1.14. This collection is estimated to take 3 minutes to complete, including gathering, preparing, and submitting the completed application form to the USPTO. Time will vary depending upon the individual case. Any comments on the amount of time you require to complete this form and/or suggestions for reducing this burden, should be sent to the Chief Information Officer, U.S. Patent and Trademark Office, U.S. Department of Commerce, P.O. Box 1450, Alexandria, VA 22313-1450. DO NOT SEND FEES OR COMPLETED FORMS TO THIS ADDRESS. **SEND TO: Commissioner for Patents, P.O. Box 1450, Alexandria, VA 22313-1450.**

If you need assistance in completing the form, call 1-800-PTO-9199 and select option 2.

Privacy Act Statement

The **Privacy Act of 1974 (P.L. 93-579)** requires that you be given certain information in connection with your submission of the attached form related to a patent application or patent. Accordingly, pursuant to the requirements of the Act, please be advised that: (1) the general authority for the collection of this information is 35 U.S.C. 2(b)(2); (2) furnishing of the information solicited is voluntary; and (3) the principal purpose for which the information is used by the U.S. Patent and Trademark Office is to process and/or examine your submission related to a patent application or patent. If you do not furnish the requested information, the U.S. Patent and Trademark Office may not be able to process and/or examine your submission, which may result in termination of proceedings or abandonment of the application or expiration of the patent.

The information provided by you in this form will be subject to the following routine uses:

1. The information on this form will be treated confidentially to the extent allowed under the Freedom of Information Act (5 U.S.C. 552) and the Privacy Act (5 U.S.C 552a). Records from this system of records may be disclosed to the Department of Justice to determine whether disclosure of these records is required by the Freedom of Information Act.
2. A record from this system of records may be disclosed, as a routine use, in the course of presenting evidence to a court, magistrate, or administrative tribunal, including disclosures to opposing counsel in the course of settlement negotiations.
3. A record in this system of records may be disclosed, as a routine use, to a Member of Congress submitting a request involving an individual, to whom the record pertains, when the individual has requested assistance from the Member with respect to the subject matter of the record.
4. A record in this system of records may be disclosed, as a routine use, to a contractor of the Agency having need for the information in order to perform a contract. Recipients of information shall be required to comply with the requirements of the Privacy Act of 1974, as amended, pursuant to 5 U.S.C. 552a(m).
5. A record related to an International Application filed under the Patent Cooperation Treaty in this system of records may be disclosed, as a routine use, to the International Bureau of the World Intellectual Property Organization, pursuant to the Patent Cooperation Treaty.
6. A record in this system of records may be disclosed, as a routine use, to another federal agency for purposes of National Security review (35 U.S.C. 181) and for review pursuant to the Atomic Energy Act (42 U.S.C. 218(c)).
7. A record from this system of records may be disclosed, as a routine use, to the Administrator, General Services, or his/her designee, during an inspection of records conducted by GSA as part of that agency's responsibility to recommend improvements in records management practices and programs, under authority of 44 U.S.C. 2904 and 2906. Such disclosure shall be made in accordance with the GSA regulations governing inspection of records for this purpose, and any other relevant (*i.e.*, GSA or Commerce) directive. Such disclosure shall not be used to make determinations about individuals.
8. A record from this system of records may be disclosed, as a routine use, to the public after either publication of the application pursuant to 35 U.S.C. 122(b) or issuance of a patent pursuant to 35 U.S.C. 151. Further, a record may be disclosed, subject to the limitations of 37 CFR 1.14, as a routine use, to the public if the record was filed in an application which became abandoned or in which the proceedings were terminated and which application is referenced by either a published application, an application open to public inspection or an issued patent.
9. A record from this system of records may be disclosed, as a routine use, to a Federal, State, or local law enforcement agency, if the USPTO becomes aware of a violation or potential violation of law or regulation.

PTO/AIA/08 (06-12)
Approved for use through 01/31/2014. OMB 0651-0032
U.S. Patent and Trademark Office; U.S. DEPARTMENT OF COMMERCE

Under the Paperwork Reduction Act of 1995, no persons are required to respond to a collection of information unless it contains a valid OMB control number.

DECLARATION FOR UTILITY OR DESIGN PATENT APPLICATION (37 CFR 1.63)

☒ Declaration Submitted With Initial Filing OR ☐ Declaration Submitted After Initial Filing (surcharge (37 CFR 1.16(f)) required)

Attorney Docket Number	17-095-SG
First Named Inventor	Sharon Goff
COMPLETE IF KNOWN	
Application Number	
Filing Date	
Art Unit	
Examiner Name	

POCKET BRA SYSTEM

(Title of the Invention)

As a below named inventor, I hereby declare that:

This declaration is directed to:

☒ The attached application,

OR

☐ United States Application Number or PCT International application number _____ filed on _____.

The above-identified application was made or authorized to be made by me.

I believe I am the original inventor or an original joint inventor of a claimed invention in the application.

I hereby acknowledge that any willful false statement made in this declaration is punishable under 18 U.S.C. 1001 by fine or imprisonment of not more than five (5) years, or both.

Authorization To Permit Access To Application by Participating Office

☐ If checked, the undersigned hereby grants the USPTO authority to provide the European Patent Office (EPO), the Japan Patent Office (JPO), the Korean Intellectual Property Office (KIPO), the World Intellectual Property Office (WIPO), and any other intellectual property offices in which a foreign application claiming priority to the above-identified patent application is filed access to the above-identified patent application. See 37 CFR 1.14(c) and (h). This box should not be checked if the applicant does not wish the EPO, JPO, KIPO, WIPO, or other intellectual property office in which a foreign application claiming priority to the above-identified patent application is filed to have access to the above-identified patent application.

In accordance with 37 CFR 1.14(h)(3), access will be provided to a copy of the above-identified patent application with respect to: 1) the above-identified patent application-as-filed; 2) any foreign application to which the above-identified patent application claims priority under 35 U.S.C. 119(a)-(d) if a copy of the foreign application that satisfies the certified copy requirement of 37 CFR 1.55 has been filed in the above-identified patent application; and 3) any U.S. application-as-filed from which benefit is sought in the above-identified patent application.

In accordance with 37 CFR 1.14(c), access may be provided to information concerning the date of filing the Authorization to Permit Access to Application by Participating Offices.

This collection of information is required by 35 U.S.C. 115 and 37 CFR 1.63. The information is required to obtain or retain a benefit by the public which is to file (and by the USPTO to process) an application. Confidentiality is governed by 35 U.S.C. 122 and 37 CFR 1.11 and 1.14. This collection is estimated to take 21 minutes to complete, including gathering, preparing, and submitting the completed application form to the USPTO. Time will vary depending upon the individual case. Any comments on the amount of time you require to complete this form and/or suggestions for reducing this burden, should be sent to the Chief Information Officer, U.S. Patent and Trademark Office, U.S. Department of Commerce, P.O. Box 1450, Alexandria, VA 22313-1450. DO NOT SEND FEES OR COMPLETED FORMS TO THIS ADDRESS. **SEND TO: Commissioner for Patents, P.O. Box 1450, Alexandria, VA 22313-1450.**

If you need assistance in completing the form, call 1-800-PTO-9199 and select option 2.

Under the Paperwork Reduction Act of 1995, no persons are required to respond to a collection of information unless it contains a valid OMB control number.

DECLARATION — Utility or Design Patent Application

Direct all correspondence to:	☒	The address associated with Customer Number:	32118	OR	☐ Correspondence address below

Name		
Address		
City	State	Zip
Country	Telephone	Email

WARNING:

Petitioner/applicant is cautioned to avoid submitting personal information in documents filed in a patent application that may contribute to identity theft. Personal information such as social security numbers, bank account numbers, or credit card numbers (other than a check or credit card authorization form PTO-2038 submitted for payment purposes) is never required by the USPTO to support a petition or an application. If this type of personal information is included in documents submitted to the USPTO, petitioners/applicants should consider redacting such personal information from the documents before submitting them to the USPTO. Petitioner/applicant is advised that the record of a patent application is available to the public after publication of the application (unless a non-publication request in compliance with 37 CFR 1.213(a) is made in the application) or issuance of a patent. Furthermore, the record from an abandoned application may also be available to the public if the application is referenced in a published application or an issued patent (see 37 CFR 1.14). Checks and credit card authorization forms PTO-2038 submitted for payment purposes are not retained in the application file and therefore are not publicly available. Petitioner/applicant is advised that documents which form the record of a patent application (such as the PTO/SB/01) are placed into the Privacy Act system of records DEPARTMENT OF COMMERCE, COMMERCE-PAT-7, System name: *Patent Application Files* . Documents not retained in an application file (such as the PTO-2038) are placed into the Privacy Act system of COMMERCE/PAT-TM-10, System name: *Deposit Accounts and Electronic Funds Transfer Profiles* .

LEGAL NAME OF SOLE OR FIRST INVENTOR:

(*E.g.*, Given Name (first and middle (if any)) and Family Name or Surname)

Sharon Goff

Inventor's Signature /Sharon Goff/		Date (Optional)	
Residence: City Hilton Head	State SC	Country US	
Mailing Address 24 Wood Duck Ct			
City Hilton Head	State SC	Zip 29928	Country US

☐ Additional inventors are being named on the _____ supplemental sheet(s) PTO/AIA/10 attached hereto

Privacy Act Statement

The Privacy Act of 1974 (P.L. 93-579) requires that you be given certain information in connection with your submission of the attached form related to a patent application or patent. Accordingly, pursuant to the requirements of the Act, please be advised that: (1) the general authority for the collection of this information is 35 U.S.C. 2(b)(2); (2) furnishing of the information solicited is voluntary; and (3) the principal purpose for which the information is used by the U.S. Patent and Trademark Office is to process and/or examine your submission related to a patent application or patent. If you do not furnish the requested information, the U.S. Patent and Trademark Office may not be able to process and/or examine your submission, which may result in termination of proceedings or abandonment of the application or expiration of the patent.

The information provided by you in this form will be subject to the following routine uses:

1. The information on this form will be treated confidentially to the extent allowed under the Freedom of Information Act (5 U.S.C. 552) and the Privacy Act (5 U.S.C 552a). Records from this system of records may be disclosed to the Department of Justice to determine whether disclosure of these records is required by the Freedom of Information Act.
2. A record from this system of records may be disclosed, as a routine use, in the course of presenting evidence to a court, magistrate, or administrative tribunal, including disclosures to opposing counsel in the course of settlement negotiations.
3. A record in this system of records may be disclosed, as a routine use, to a Member of Congress submitting a request involving an individual, to whom the record pertains, when the individual has requested assistance from the Member with respect to the subject matter of the record.
4. A record in this system of records may be disclosed, as a routine use, to a contractor of the Agency having need for the information in order to perform a contract. Recipients of information shall be required to comply with the requirements of the Privacy Act of 1974, as amended, pursuant to 5 U.S.C. 552a(m).
5. A record related to an International Application filed under the Patent Cooperation Treaty in this system of records may be disclosed, as a routine use, to the International Bureau of the World Intellectual Property Organization, pursuant to the Patent Cooperation Treaty.
6. A record in this system of records may be disclosed, as a routine use, to another federal agency for purposes of National Security review (35 U.S.C. 181) and for review pursuant to the Atomic Energy Act (42 U.S.C. 218(c)).
7. A record from this system of records may be disclosed, as a routine use, to the Administrator, General Services, or his/her designee, during an inspection of records conducted by GSA as part of that agency's responsibility to recommend improvements in records management practices and programs, under authority of 44 U.S.C. 2904 and 2906. Such disclosure shall be made in accordance with the GSA regulations governing inspection of records for this purpose, and any other relevant (i.e., GSA or Commerce) directive. Such disclosure shall not be used to make determinations about individuals.
8. A record from this system of records may be disclosed, as a routine use, to the public after either publication of the application pursuant to 35 U.S.C. 122(b) or issuance of a patent pursuant to 35 U.S.C. 151. Further, a record may be disclosed, subject to the limitations of 37 CFR 1.14, as a routine use, to the public if the record was filed in an application which became abandoned or in which the proceedings were terminated and which application is referenced by either a published application, an application open to public inspection or an issued patent.
9. A record from this system of records may be disclosed, as a routine use, to a Federal, State, or local law enforcement agency, if the USPTO becomes aware of a violation or potential violation of law or regulation.

FIG. 1

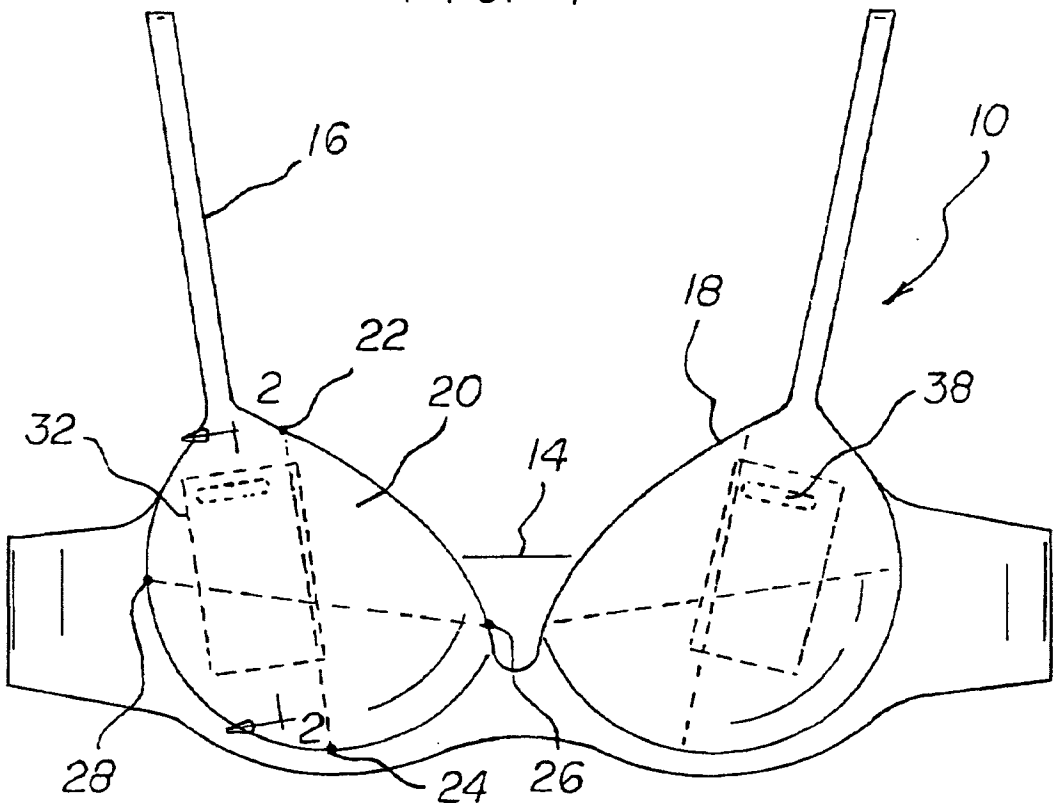

FIG. 2

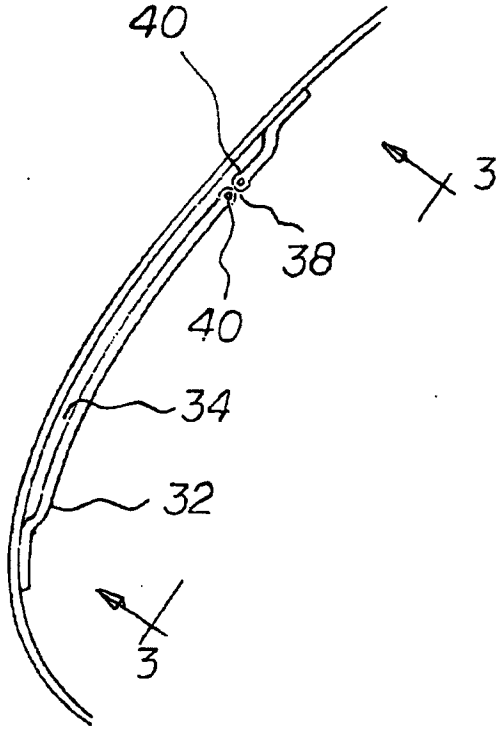

FIG. 3

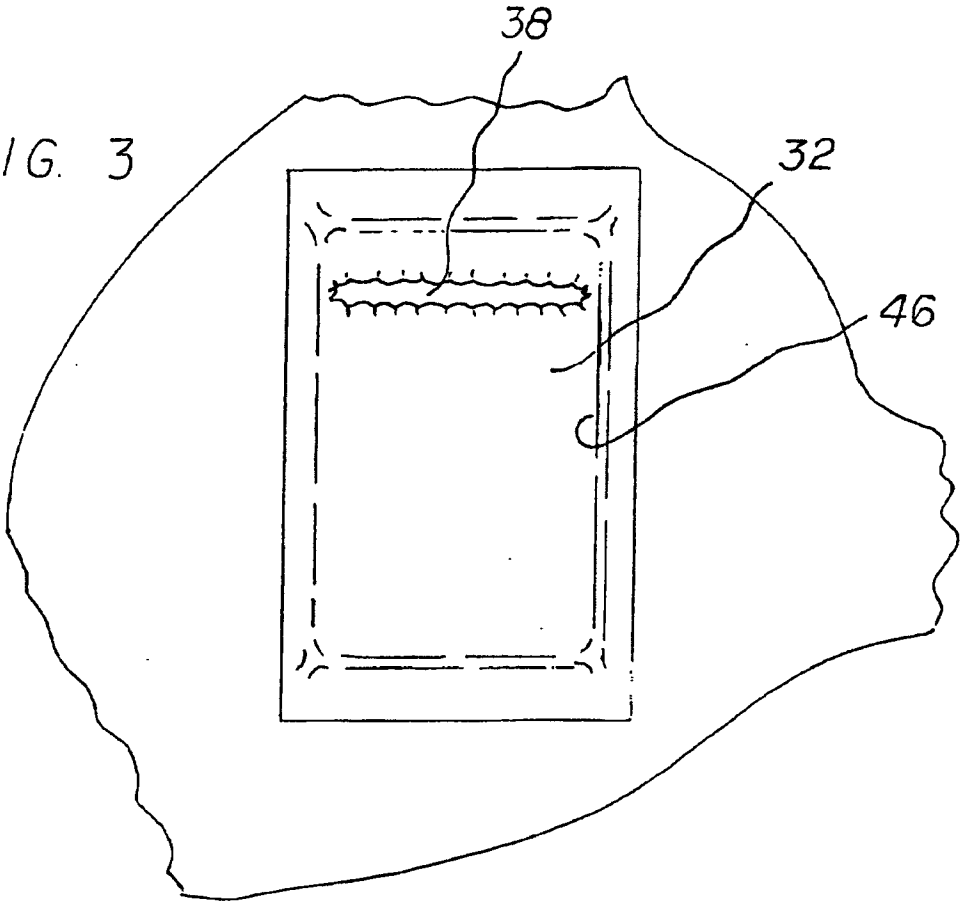

FIG. 4

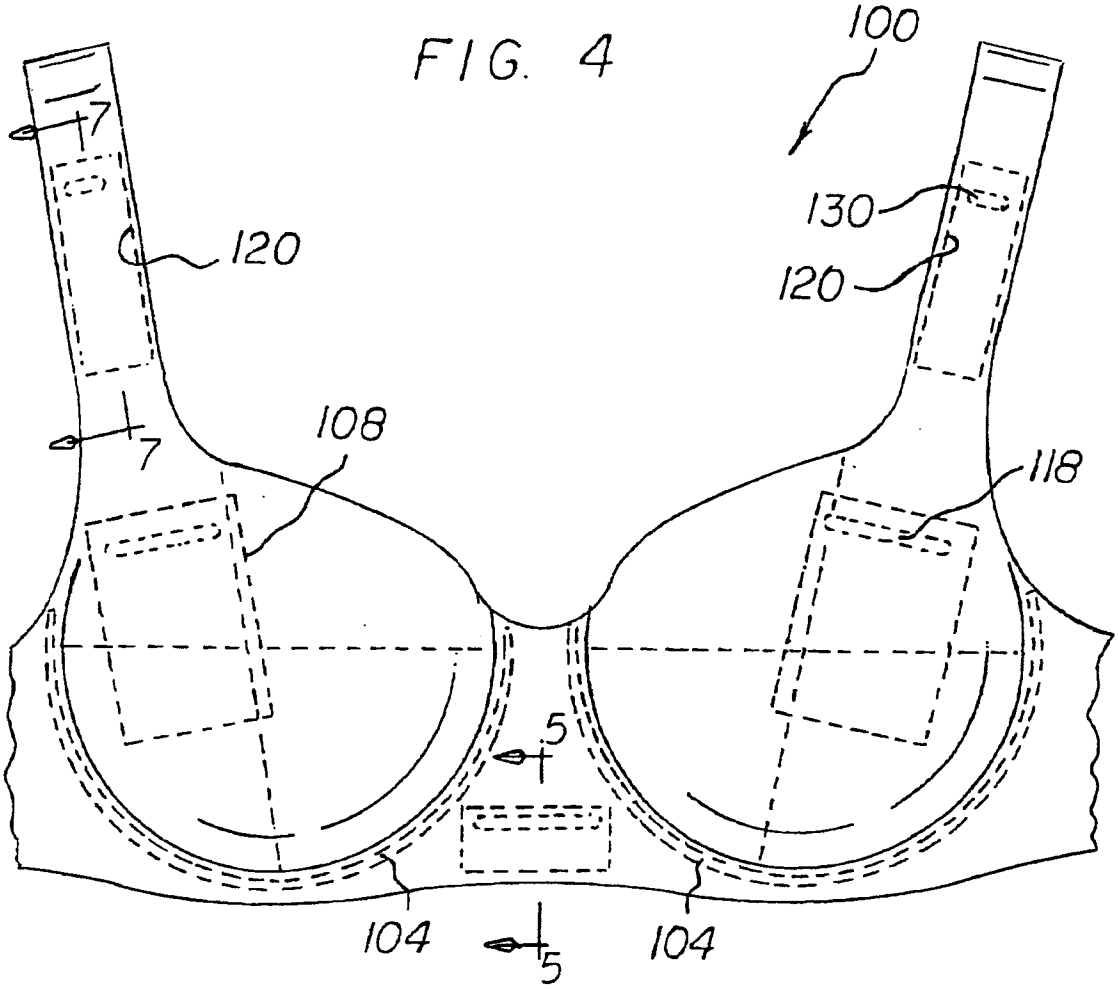

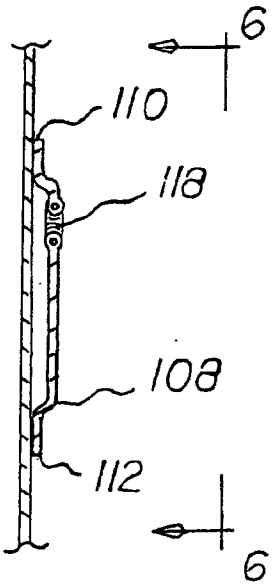

FIG. 5

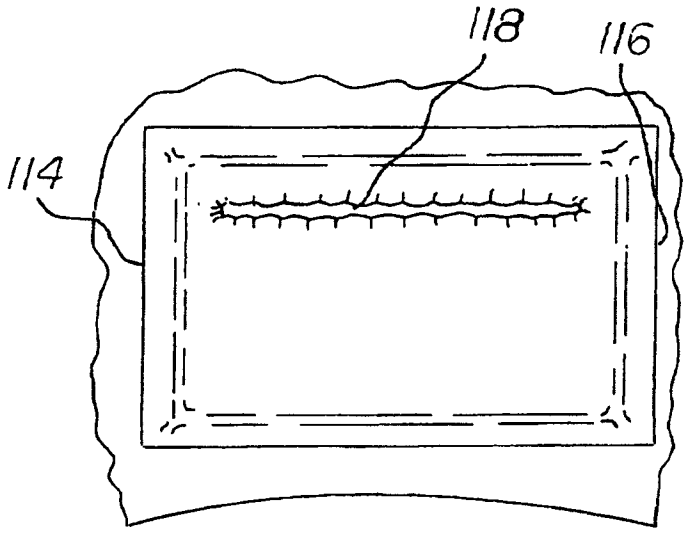

FIG. 6

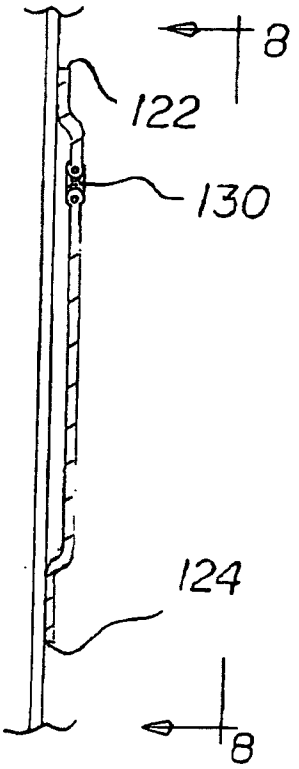

FIG. 7

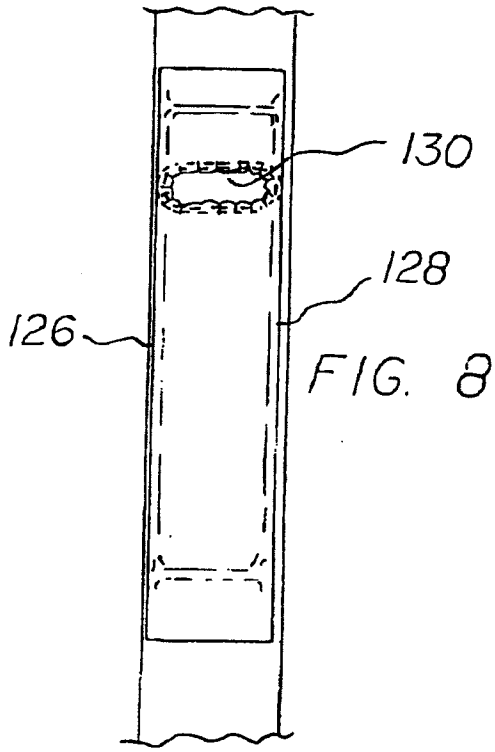

FIG. 8

FIG. 9

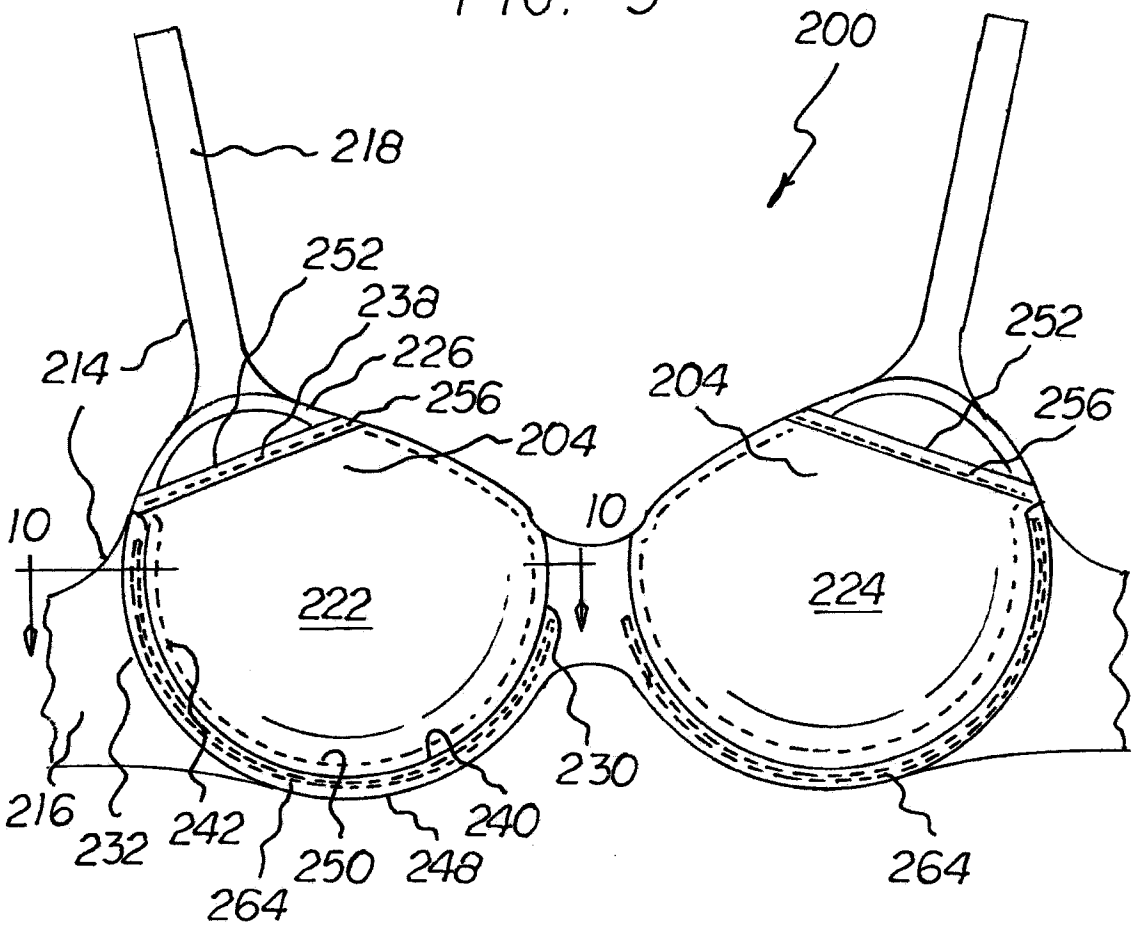
200
218
252
238
226
256
214
204
204
252
256
10
10
222
224
230
216
232
242
250
248
240
264
264

FIG. 10

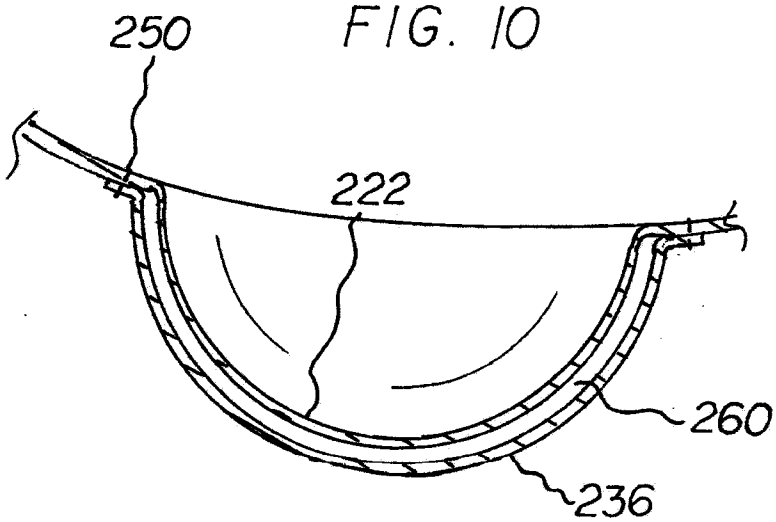
250
222
260
236

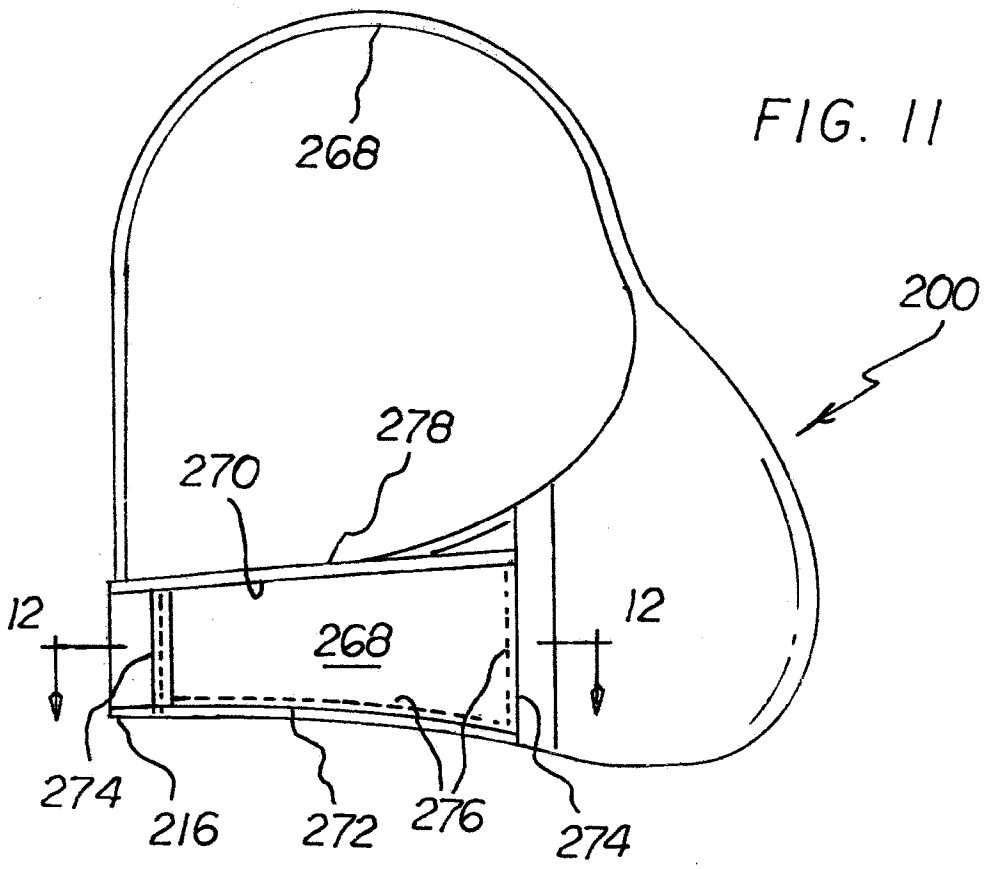

FIG. 11

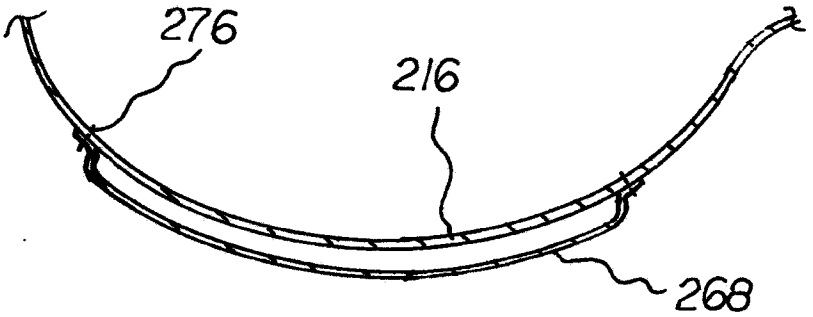

FIG. 12

POCKET BRA SYSTEM

APPLICATION

FOR UNITED STATES LETTERS PATENT

SPECIFICATION

TO ALL WHOM IT MAY CONCERN:

BE IT KNOWN THAT I, SHARON J. GOFF, a citizen of the UNITED STATES OF AMERICA, have invented new and useful improvements in a POCKET BRA SYSTEM of which the following is a specification:

POCKET BRA SYSTEM

BACKGROUND OF THE INVENTION

Related Application

The present application is a continuation-in-part of pending Application Number 13/066,822 filed 04/26/2011, the subject matter of which is incorporated herein by reference.

Field of the Invention

The present invention relates to a pocket bra system and more particularly pertains to removably receiving a handheld electronic device while providing support and shape to the breasts of a wearer, the receiving and supporting and shaping being done in a safe, convenient and economical manner.

SUMMARY OF THE INVENTION

In view of the disadvantages inherent in the known types of bra systems of known designs and configurations now present in the prior art, the present invention provides an improved pocket bra system. As such, the general purpose of the present invention, which will be described subsequently in greater detail, is to provide a new and improved pocket bra system and method which has all the advantages of the prior art and none of the disadvantages.

To attain this, the present invention essentially comprises a pocket bra system. First provided is a strap assembly which includes a chest strap and shoulder straps. Similarly configured

left and right cups are provided. The strap assembly is attached to the cups whereby the strap assembly adheres the cups to a wearer. Each cup has curved upper, lower, interior and exterior edges. Each cup has inside and outside surfaces. A patch is operatively associated with each cup. Each patch has a linear upper edge and curved lower, interior and exterior edges. Each patch has inside and outside surfaces. Stitching couples the lower, interior and exterior edges of each patch to the lower, interior and exterior edges of an associated cup. A linear opening is formed along the upper edge of each patch. Piping covers the upper edge of each patch. The piping is adapted to allow the patch to move away from and back toward the cup between open and closed orientations.

There has thus been outlined, rather broadly, the more important features of the invention in order that the detailed description thereof that follows may be better understood and in order that the present contribution to the art may be better appreciated. There are, of course, additional features of the invention that will be described hereinafter and which will form the subject matter of the claims attached.

In this respect, before explaining at least one embodiment of the invention in detail, it is to be understood that the invention is not limited in its application to the details of construction and to the arrangements of the components set forth

in the following description or illustrated in the drawings. The invention is capable of other embodiments and of being practiced and carried out in various ways. Also, it is to be understood that the phraseology and terminology employed herein are for the purpose of descriptions and should not be regarded as limiting.

As such, those skilled in the art will appreciate that the conception, upon which this disclosure is based, may readily be utilized as a basis for the designing of other structures, methods and systems for carrying out the several purposes of the present invention. It is important, therefore, that the claims be regarded as including such equivalent constructions insofar as they do not depart from the spirit and scope of the present invention.

It is therefore an object of the present invention to provide a new and improved pocket bra system which has all of the advantages of the prior art bra systems of known designs and configurations and none of the disadvantages.

It is another object of the present invention to provide a new and improved pocket bra system which may be easily and efficiently manufactured and marketed.

It is further object of the present invention to provide a new and improved pocket bra system which is of durable and reliable constructions.

An even further object of the present invention is to provide a new and improved pocket bra system which is susceptible of a low cost of manufacture with regard to both materials and labor, and which accordingly is then susceptible of low prices of sale to the consuming public, thereby making such pocket bra system economically available to the buying public.

Even still another object of the present invention is to provide a pocket bra system for removably receiving a handheld electronic device while providing support and shape to the breasts of a wearer, the receiving and supporting and shaping being done in a safe, convenient and economical manner.

Lastly, it is an object of the present invention to provide a new and improved pocket bra system for removably receiving a handheld electronic device and other objects while providing support and shape to the breasts of a wearer.

These together with other objects of the invention, along with the various features of novelty which characterize the invention, are pointed out with particularity in the claims annexed to and forming a part of this disclosure. For a better understanding of the invention, its operating advantages and the specific objects attained by its uses, reference should be had to the accompanying drawings and descriptive matter in which there is illustrated preferred and alternate embodiments of the invention.

BRIEF DESCRIPTION OF THE DRAWINGS

The invention will be better understood and objects other than those set forth above will become apparent when consideration is given to the following detailed description thereof. Such description makes reference to the annexed drawings wherein:

Figure 1 is a front elevational view of a pocket bra system constructed in accordance with the principles of the present invention.

Figure 2 is a cross sectional view taken along line 2-2 of Figure 1.

Figure 3 is a rear elevational view taken along line 3-3 of Figure 2.

Figure 4 is a front elevational view of a pocket bra system constructed in accordance with an alternate embodiment of the invention.

Figure 5 is a cross sectional view taken along line 5-5 of Figure 4.

Figure 6 is a rear elevational view taken along line 6-6 of Figure 5.

Figure 7 is a cross sectional view taken along line 7-7 of Figure 4.

Figure 8 is a rear elevational view taken along line 8-8 of Figure 7.

Figure 9 is a front elevational view of a pocket bra system constructed in accordance with another alternate embodiment of the invention.

Figure 10 is a cross sectional view taken along line 10-10 of Figure 9.

Figure 11 is a side elevational view of the pocket bra system shown in Figures 9 and 10.

Figure 12 is a cross sectional view taken along line 12-12 of Figure 11.

The same reference numerals refer to the same parts throughout the various Figures.

DESCRIPTION OF THE PREFERRED EMBODIMENT

With reference now to the drawings, and in particular to Figure 1 thereof, the preferred embodiment of the new and improved pocket bra system embodying the principles and concepts of the present invention and generally designated by the reference numeral 10 will be described.

The present invention, the pocket bra system 10 is comprised of a plurality of components. Such components in their broadest context include a strap, left and right cups, a rectangular patch and a linear slit. Such components are individually configured and correlated with respect to each other so as to attain the desired objective.

First provided is a strap assembly. The strap assembly includes a generally horizontal chest strap 14. The chest strap is positionable around the chest and back of a wearer. The strap assembly includes left and right generally vertical shoulder straps 16. The shoulder straps are positionable over the shoulders of the wearer. The shoulder straps have free ends. The free ends are coupled to the chest strap adjacent to the chest of the wearer and adjacent to the back of the wearer.

A left cup 18 is provided. A similarly configured right cup 20 is provided. Each cup has an inside surface and an outside surface. The left and right cups each have an upper-most point 22. The left and right cups each have a lower-most point 24. A generally vertical axis is provided. The vertical axis divides each cup into an inner hemisphere interiorly and an outer hemisphere exteriorly. The left and right cups each have an inner-most point 26. The left and right cups each have an outer-most point 28. A generally horizontal axis is provided. The horizontal axis divides each cup into an upper hemisphere above and a lower hemisphere below.

A rectangular patch 32 is provided next. The patch is operatively associated with each cup. Each patch has generally horizontal upper and lower edges. Each patch has generally vertical interior and exterior edges. The patch has a periphery. The periphery has stitching. In this manner the periphery of

each patch is coupled to the inside surface of an associated cup. The majority of each patch is in the upper hemisphere. The majority of each patch is in the outer hemisphere. A rectangular chamber 34 is provided. The chamber is provided between each patch and its associated cup. The chamber is rectangular. The chamber has a height of 120 and 140 millimeters. The chamber has a width of between 60 and 70 millimeters. The pockets are fabricated of a resilient closed cell polyurethane foam. The foam has a thickness of from 2 to 4 millimeters. The patches are fabricated of an elastic fabric.

Further provided is a linear slit 38. The slit is provided in each patch. The slit is provided parallel with, and closely spaced from, the upper edge of each patch. Each slit has a length greater than 90 percent of the width of the chamber. An elastic band 40 is provided. The elastic band is provided within each patch. The elastic band surrounds the slit. The elastic band is adapted to return the slit to a closed orientation. The elastic band is further adapted to allow the slit to stretch to an enlarged orientation.

Provided last is a handheld electronic device 46. The handheld electronic device is positionable within the chamber. The handheld electronic device has a height of 115 millimeters, plus or minus 10 percent. The handheld electronic device has a width of 59 millimeters. The handheld electronic device has a

thickness of 9 millimeters plus or minus 10 percent. The slit is adapted to stretch to the open orientation when adding the handheld device to, or removing the handheld device from, the chamber. The slit is adapted to contract to the closed orientation when the handheld device is within or without the chamber. The thickness and the material of the cups and the patches are adapted to abate inward projections by the handheld devices in the chambers tending to poke a user. The thickness and the material of the cups and the patches are adapted to abate outward projections by the handheld devices in the chambers tending to create unsightly projections.

An alternate embodiment 100 of the present invention is provided. An under-wire 104 is provided. The under-wire is provided beneath each cup.

A central patch 108 is provided. The central patch is provided intermediate the cups. In this manner a central chamber is formed. The central patch has horizontal upper and lower edges 110, 112. The central patch has vertical side edges 114, 116. The upper and lower edges are longer than the side edges. The central patch has a central slit 118. The central slit is provided parallel with and in proximity to the upper edge. The central chamber is adapted to receive and support keys.

An upper patch 120 is provided on each shoulder strap. The upper patches have horizontal upper and lower edges 122, 124. The upper patches have vertical side edges 126, 128. The upper and lower edges are shorter than the side edges. The upper patches each have an upper slit 130. The upper slit is provided parallel with and in proximity to the upper edge. The upper chambers are adapted to receive and support pills.

Figures 9 through 12 illustrate a system 200 constructed in accordance with another alternate embodiment of the invention. In such alternate embodiment, enlarged bra pockets 202 are constructed on the cups of the bra. In addition, side pockets 204 are constructed along both sides of the bra. Although only a right side pocket is illustrated, it should be understood that a similarly constructed left side pocket is preferably provided additionally.

As shown in Figures 9 and 10, there is illustrated a pocket bra system 200 for removably receiving a handheld electronic device and other objects while providing support and shape to the breasts of a wearer. The system includes a strap assembly 214. The strap assembly is formed of a chest strap 216 and shoulder straps 218.

Next provided are similarly configured left and right cups 222, 224. Each cup has inside and outside surfaces. The strap assembly is attached to the cups whereby the strap assembly

adheres the cups to a wearer. Each cup has curved upper edge 226, a lower edge 228, an interior edge 230 and an exterior edge 232. Each cup has inside and outside surfaces.

A patch 236 is operatively associated with each cup. Each patch has a linear upper edge 238 and a curved lower edge 240, an interior edge 242 and an exterior edge 248. Each patch has inside and outside surfaces.

Stitching 250 couples the lower, interior and exterior edges of each patch to the lower, interior and exterior edges of an associated cup. A linear opening 252 is thus formed along the upper edge of each patch. Piping 256 covers the upper edge of each patch. The upper edge of the patch and the piping are adapted to allow the patch to move away from and back toward the cup between open and closed orientations.

Pockets 260 are formed between the patches and the cups. The cups are preferably fabricated of a resilient closed cell polyurethane foam with a thickness of from 2 to 4 millimeters. The patches are also preferably fabricated of a resilient closed cell polyurethane foam with a thickness of from 2 to 4 millimeters.

A handheld electronic device 46 is adapted to be placed within a pocket.

An under-wire 264 is coupled beneath each cup in a generally vertical plane.

Lastly provided is a side patch 268 on each side of the chest strap. The side patches each have a horizontal upper edge 270 and a lower edge 272 and vertical side edges 274. The upper and lower edges of each patch are longer than the side edges. The side patches include side stitching 276 along the lower and side edges. Thus is formed an upper opening 278 at each side patch.

As to the manner of usage and operation of the present invention, the same should be apparent from the above description. Accordingly, no further discussion relating to the manner of usage and operation will be provided.

With respect to the above description then, it is to be realized that the optimum dimensional relationships for the parts of the invention, to include variations in size, materials, shape, form, function and manner of operation, assembly and use, are deemed readily apparent and obvious to one skilled in the art, and all equivalent relationships to those illustrated in the drawings and described in the specification are intended to be encompassed by the present invention.

Therefore, the foregoing is considered as illustrative only of the principles of the invention. Further, since numerous modifications and changes will readily occur to those skilled in the art, it is not desired to limit the invention to the exact construction and operation shown and described, and accordingly,

all suitable modifications and equivalents may be resorted to, falling within the scope of the invention.

1. A pocket bra comprising:

a strap assembly comprising a chest strap; and comprising left and right cups, each cup being an area to receive a breast of a wearer and having inside and outside surfaces, the strap assembly being attached to the cups whereby the strap assembly connects the cups to the wearer, each cup having upper, lower, interior body facing, and opposite exterior edges;

a patch forming a pocket operatively associated with at least one of the left and right cups, the patch having an upper edge, a lower edge, and an exterior edge, the patch having inside and outside surfaces;

the lower edge of the patch coupled to the bra adjacent to a lower edge of the at least one of the left and right cups, and the exterior edge of the patch coupled adjacent to the exterior edge of the at least one of the left and right cups, a pocket opening formed along the upper edge of the patch being unconnected to the at least one of the left and right cups;

the pocket opening capable of repeated receiving and removal of an item when being worn by the wearer; and

wherein the upper edge of the patch crosses over a surface of the cup to form the opening, the upper edge crossing such that the opening faces the exterior edge of the at least one of the left and right cup to which it is attached.

2. The pocket bra of claim 1 wherein the patch is operatively associated with only one of the left and right cups.
3. The pocket bra of claim 1 further comprising a non-padding item positioned in the pocket.
4. The pocket bra of claim 1 wherein the lower edge of the patch is coupled adjacent to the bra by a stitching.
5. The pocket bra of claim 1 wherein the exterior edge of the patch is coupled to the exterior edge of the at least one of the left and right cups by a stitching.
6. The pocket bra of claim 2 further comprising a second patch forming a second pocket operatively associated with the other of the left and right cups.
7. The pocket bra of claim 1 wherein the patch lower and exterior edges are aligned with the lower and exterior edges of the at least one of the left and right cups by a stitching, and wherein the stitching is along the lower and exterior edges of the patch.
8. A pocket bra comprising:

a strap assembly comprising a chest strap; and comprising left and right cups, each cup being an area to receive a breast of a wearer and having inside and outside surfaces, the strap assembly being attached to the cups whereby the strap assembly connects the cups to the wearer, each cup having upper, lower, interior body facing, and opposite exterior edges;

a patch forming a pocket operatively associated with at least one of the left and right cups, the patch having an upper edge, a lower edge, and an exterior edge, the patch having inside and outside surfaces;

the lower edge of the patch coupled to the bra adjacent to a lower edge of the at least one of the left and right cups, and the exterior edge of the patch coupled adjacent to the exterior edge of the at least one of the left and right cups, a pocket opening formed along the upper edge of the patch being unconnected to the at least one of the left and right cups;

the pocket opening capable of repeated receiving and removal of an item when being worn by the wearer; and

wherein the upper edge of the patch crosses over a surface of the cup to form the opening, the upper edge crossing such that the opening faces the interior edge of the at least one of the left and right cup to which it is attached.

9. The pocket bra of claim 8 wherein the patch is operatively associated with only one of the left and right cups.
10. The pocket bra of claim 8 further comprising a non-padding item positioned in the pocket.
11. The pocket bra of claim 8 wherein the lower edge of the patch is coupled adjacent to the bra by a stitching.
12. The pocket bra of claim 8 wherein the exterior edge of the patch is coupled adjacent to the exterior edge of the at least one of the left and right cups by a stitching.
13. The pocket bra of claim 9 further comprising a second patch forming a second pocket operatively associated with the other of the left and right cups.
14. The pocket bra of claim 8 wherein the patch lower and exterior edges are aligned with the lower and exterior edges of the at least one of the left and right cups by a stitching, and wherein the stitching is along the lower and exterior edges of the patch.

POCKET BRA SYSTEM

ABSTRACT OF THE DISCLOSURE

A strap assembly includes a chest strap and shoulder straps. Similarly configured left and right cups are provided. The strap assembly is attached to the cups whereby the strap assembly adheres the cups to a wearer. Each cup has curved upper, lower, interior and exterior edges. Each cup has inside and outside surfaces. A patch is operatively associated with each cup. Each patch has a linear upper edge and curved lower, interior and exterior edges. Each patch has inside and outside surfaces. Stitching couples the lower, interior and exterior edges of each patch to the lower, interior and exterior edges of an associated cup. A linear opening is formed along the upper edge of each patch. Piping covers the upper edge of each patch. The piping is adapted to allow the patch to move away from and back toward the cup between open and closed orientations.

Electronic Patent Application Fee Transmittal

Application Number:	
Filing Date:	
Title of Invention:	POCKET BRA SYSTEM
First Named Inventor/Applicant Name:	Sharon Goff
Filer:	Gary Ervery Lambert
Attorney Docket Number:	17-095-SG

Filed as Small Entity

Filing Fees for Utility under 35 USC 111(a)

Description	Fee Code	Quantity	Amount	Sub-Total in USD($)
Basic Filing:				
UTILITY FILING FEE (ELECTRONIC FILING)	4011	1	70	70
UTILITY SEARCH FEE	2111	1	300	300
UTILITY EXAMINATION FEE	2311	1	360	360
Pages:				
Claims:				
Miscellaneous-Filing:				
Petition:				
Patent-Appeals-and-Interference:				

Description	Fee Code	Quantity	Amount	Sub-Total in USD($)
Post-Allowance-and-Post-Issuance:				
Extension-of-Time:				
Miscellaneous:				
			Total in USD ($)	**730**

Electronic Acknowledgement Receipt

EFS ID:	30103255
Application Number:	15679206
International Application Number:	
Confirmation Number:	2672
Title of Invention:	POCKET BRA SYSTEM
First Named Inventor/Applicant Name:	Sharon Goff
Customer Number:	32118
Filer:	Gary Ervery Lambert
Filer Authorized By:	
Attorney Docket Number:	17-095-SG
Receipt Date:	17-AUG-2017
Filing Date:	
Time Stamp:	09:11:55
Application Type:	Utility under 35 USC 111(a)

Payment information:

Submitted with Payment	yes
Payment Type	CARD
Payment was successfully received in RAM	$730
RAM confirmation Number	081717INTEFSW09131100
Deposit Account	
Authorized User	

The Director of the USPTO is hereby authorized to charge indicated fees and credit any overpayment as follows:

File Listing:

Document Number	Document Description	File Name	File Size(Bytes)/ Message Digest	Multi Part /.zip	Pages (if appl.)
1	Application Data Sheet	ADS.pdf	1503566 73af5253bdadcac4dd96a4f02bbde60084d06a81	no	6
Warnings:					
Information:					
2	Information Disclosure Statement (IDS) Form (SB08)	IDS.pdf	612627 df89e0d317fe9d596572f29561a9defc62658b47	no	5
Warnings:					
Information:					
3	Power of Attorney	POA.pdf	197350 875bf17ac97ef4298e1d0045d66ea94c6e7f7401	no	3
Warnings:					
Information:					
4	Oath or Declaration filed	Declaration_AIA08.pdf	189029 bc979842fcbce2d1ba1aca238e88dc0ca3846733	no	3
Warnings:					
Information:					
5	Drawings-only black and white line drawings	LJ14-02Draw.pdf	94795 a7c1019e149bdc2c6d348e384d1d585963b3f6f1	no	6
Warnings:					
Information:					
6	Specification	16-030-SG-Front-Pocket-Spec.pdf	45405 3285ef18aa3169053f12e76e3a34d56d2c8fae99	no	14
Warnings:					
Information:					

7	Claims	Front-Pocket-Claims-17-095-SG.pdf	16362 a4a9e3062b33f7e45b11f05dd351b225ada513a6	no	2
Warnings:					
Information:					
8	Abstract	LJ14-01-02Abstract.pdf	21581 266c17fafd0561e661f18d8d9903be016fba3cd2	no	1
Warnings:					
Information:					
9	Fee Worksheet (SB06)	fee-info.pdf	34868 19b74ab6e1471fc2a5316162fa44693777a76037	no	2
Warnings:					
Information:					
			Total Files Size (in bytes):	2715583	

This Acknowledgement Receipt evidences receipt on the noted date by the USPTO of the indicated documents, characterized by the applicant, and including page counts, where applicable. It serves as evidence of receipt similar to a Post Card, as described in MPEP 503.

<u>New Applications Under 35 U.S.C. 111</u>
If a new application is being filed and the application includes the necessary components for a filing date (see 37 CFR 1.53(b)-(d) and MPEP 506), a Filing Receipt (37 CFR 1.54) will be issued in due course and the date shown on this Acknowledgement Receipt will establish the filing date of the application.
<u>National Stage of an International Application under 35 U.S.C. 371</u>
If a timely submission to enter the national stage of an international application is compliant with the conditions of 35 U.S.C. 371 and other applicable requirements a Form PCT/DO/EO/903 indicating acceptance of the application as a national stage submission under 35 U.S.C. 371 will be issued in addition to the Filing Receipt, in due course.
<u>New International Application Filed with the USPTO as a Receiving Office</u>
If a new international application is being filed and the international application includes the necessary components for an international filing date (see PCT Article 11 and MPEP 1810), a Notification of the International Application Number and of the International Filing Date (Form PCT/RO/105) will be issued in due course, subject to prescriptions concerning national security, and the date shown on this Acknowledgement Receipt will establish the international filing date of the application.

Under the Paperwork Reduction Act of 1995, no persons are required to respond to a collection of information unless it contains a valid OMB control number.

Application Data Sheet 37 CFR 1.76	Attorney Docket Number	16-030-SG
	Application Number	
Title of Invention	POCKET BRA SYSTEM	

The application data sheet is part of the provisional or nonprovisional application for which it is being submitted. The following form contains the bibliographic data arranged in a format specified by the United States Patent and Trademark Office as outlined in 37 CFR 1.76.
This document may be completed electronically and submitted to the Office in electronic format using the Electronic Filing System (EFS) or the document may be printed and included in a paper filed application.

Secrecy Order 37 CFR 5.2

☐ Portions or all of the application associated with this Application Data Sheet may fall under a Secrecy Order pursuant to 37 CFR 5.2 (Paper filers only. Applications that fall under Secrecy Order may not be filed electronically.)

Inventor Information:

Inventor 1 Remove

Legal Name

Prefix	Given Name	Middle Name	Family Name	Suffix
	Sharon		Goff	

Residence Information (Select One) ● US Residency Non US Residency Active US Military Service

City	Hilton Head	State/Province	SC	Country of Residence i	US

Mailing Address of Inventor:

Address 1	24 Wood Duck Ct		
Address 2			
City	Hilton Head	State/Province	SC
Postal Code	29928	Country i	US

All Inventors Must Be Listed - Additional Inventor Information blocks may be generated within this form by selecting the **Add** button. Add

Correspondence Information:

Enter either Customer Number or complete the Correspondence Information section below.
For further information see 37 CFR 1.33(a).

☐ **An Address is being provided for the correspondence Information of this application.**

Customer Number	32118		
Email Address		Add Email	Remove Email

Application Information:

Title of the Invention	POCKET BRA SYSTEM		
Attorney Docket Number	16-030-SG	Small Entity Status Claimed	☒
Application Type	Nonprovisional		
Subject Matter	Utility		
Total Number of Drawing Sheets (if any)		Suggested Figure for Publication (if any)	

Under the Paperwork Reduction Act of 1995, no persons are required to respond to a collection of information unless it contains a valid OMB control number.

Application Data Sheet 37 CFR 1.76	Attorney Docket Number	16-030-SG
	Application Number	
Title of Invention	POCKET BRA SYSTEM	

Publication Information:

☐ Request Early Publication (Fee required at time of Request 37 CFR 1.219)

☒ **Request Not to Publish.** I hereby request that the attached application not be published under 35 U.S.C. 122(b) and certify that the invention disclosed in the attached application **has not and will not** be the subject of an application filed in another country, or under a multilateral international agreement, that requires publication at eighteen months after filing.

Representative Information:

Representative information should be provided for all practitioners having a power of attorney in the application. Providing this information in the Application Data Sheet does not constitute a power of attorney in the application (see 37 CFR 1.32).
Either enter Customer Number or complete the Representative Name section below. If both sections are completed the customer Number will be used for the Representative Information during processing.

Please Select One:	● Customer Number	US Patent Practitioner	◯ Limited Recognition (37 CFR 11.9)
Customer Number	32118		

Domestic Benefit/National Stage Information:

This section allows for the applicant to either claim benefit under 35 U.S.C. 119(e), 120, 121, or 365(c) or indicate National Stage entry from a PCT application. Providing this information in the application data sheet constitutes the specific reference required by 35 U.S.C. 119(e) or 120, and 37 CFR 1.78.

Prior Application Status	Pending		Remove
Application Number	Continuity Type	Prior Application Number	Filing Date (YYYY-MM-DD)
	Continuation of	15045606	2016-02-17
Prior Application Status	Pending		Remove
Application Number	Continuity Type	Prior Application Number	Filing Date (YYYY-MM-DD)
15045606	Continuation in part of	14082777	2013-11-18
Prior Application Status	Patented		Remove

Application Number	Continuity Type	Prior Application Number	Filing Date (YYYY-MM-DD)	Patent Number	Issue Date (YYYY-MM-DD)
14082777	Continuation in part of	13066822	2011-04-26	8597072	2013-12-03

Additional Domestic Benefit/National Stage Data may be generated within this form by selecting the **Add** button. Add

Foreign Priority Information:

Application Data Sheet 37 CFR 1.76	Attorney Docket Number	16-030-SG
	Application Number	
Title of Invention	POCKET BRA SYSTEM	

This section allows for the applicant to claim priority to a foreign application. Providing this information in the application data sheet constitutes the claim for priority as required by 35 U.S.C. 119(b) and 37 CFR 1.55(d). When priority is claimed to a foreign application that is eligible for retrieval under the priority document exchange program (PDX)[i] the information will be used by the Office to automatically attempt retrieval pursuant to 37 CFR 1.55(h)(1) and (2). Under the PDX program, applicant bears the ultimate responsibility for ensuring that a copy of the foreign application is received by the Office from the participating foreign intellectual property office, or a certified copy of the foreign priority application is filed, within the time period specified in 37 CFR 1.55(g)(1).

Remove

Application Number	Country[i]	Filing Date (YYYY-MM-DD)	Access Code[i] (if applicable)

Additional Foreign Priority Data may be generated within this form by selecting the **Add** button. Add

Statement under 37 CFR 1.55 or 1.78 for AIA (First Inventor to File) Transition Applications

X This application (1) claims priority to or the benefit of an application filed before March 16, 2013 and (2) also contains, or contained at any time, a claim to a claimed invention that has an effective filing date on or after March 16, 2013.

Authorization to Permit Access:

Authorization to Permit Access to the Instant Application by the Participating Offices

If checked, the undersigned hereby grants the USPTO authority to provide the European Patent Office (EPO), the Japan Patent Office (JPO), the Korean Intellectual Property Office (KIPO), the World Intellectual Property Office (WIPO), and any other intellectual property offices in which a foreign application claiming priority to the instant patent application is filed access to the instant patent application. See 37 CFR 1.14(c) and (h). This box should not be checked if the applicant does not wish the EPO, JPO, KIPO, WIPO, or other intellectual property office in which a foreign application claiming priority to the instant patent application is filed to have access to the instant patent application.

In accordance with 37 CFR 1.14(h)(3), access will be provided to a copy of the instant patent application with respect to: 1) the instant patent application-as-filed; 2) any foreign application to which the instant patent application claims priority under 35 U.S.C. 119(a)-(d) if a copy of the foreign application that satisfies the certified copy requirement of 37 CFR 1.55 has been filed in the instant patent application; and 3) any U.S. application-as-filed from which benefit is sought in the instant patent application.

In accordance with 37 CFR 1.14(c), access may be provided to information concerning the date o f filing this Authorization.

Under the Paperwork Reduction Act of 1995, no persons are required to respond to a collection of information unless it contains a valid OMB control number.

Application Data Sheet 37 CFR 1.76	Attorney Docket Number	16-030-SG
	Application Number	
Title of Invention	POCKET BRA SYSTEM	

Applicant Information:

Providing assignment information in this section does not substitute for compliance with any requirement of part 3 of Title 37 of CFR to have an assignment recorded by the Office.

Applicant 1 Remove

If the applicant is the inventor (or the remaining joint inventor or inventors under 37 CFR 1.45), this section should not be completed. The information to be provided in this section is the name and address of the legal representative who is the applicant under 37 CFR 1.43; or the name and address of the assignee, person to whom the inventor is under an obligation to assign the invention, or person who otherwise shows sufficient proprietary interest in the matter who is the applicant under 37 CFR 1.46. If the applicant is an applicant under 37 CFR 1.46 (assignee, person to whom the inventor is obligated to assign, or person who otherwise shows sufficient proprietary interest) together with one or more joint inventors, then the joint inventor or inventors who are also the applicant should be identified in this section. Clear

Assignee	Legal Representative under 35 U.S.C. 117	Joint Inventor
Person to whom the inventor is obligated to assign.	Person who shows sufficient proprietary interest	

If applicant is the legal representative, indicate the authority to file the patent application, the inventor is:

Name of the Deceased or Legally Incapacitated Inventor :

If the Applicant is an Organization check here. ☐

Prefix	Given Name	Middle Name	Family Name	Suffix

Mailing Address Information For Applicant:

Address 1			
Address 2			
City		**State/Province**	
Country		Postal Code	
Phone Number		Fax Number	
Email Address			

Additional Applicant Data may be generated within this form by selecting the Add button. Add

Non-Applicant Assignee Information:

Providing assignment information in this section does not subsitute for compliance with any requirement of part 3 of Title 37 of CFR to have an assignment recorded by the Office.

Under the Paperwork Reduction Act of 1995, no persons are required to respond to a collection of information unless it contains a valid OMB control number.

Application Data Sheet 37 CFR 1.76	Attorney Docket Number	16-030-SG
	Application Number	
Title of Invention	POCKET BRA SYSTEM	

Assignee 1

Complete this section only if non-applicant assignee information is desired to be included on the patent application publication in accordance with 37 CFR 1.215(b). Do not include in this section an applicant under 37 CFR 1.46 (assignee, person to whom the inventor is obligated to assign, or person who otherwise shows sufficient proprietary interest), as the patent application publication will include the name of the applicant(s).

Remove

If the Assignee is an Organization check here. ☒

Organization Name	SherryWear LLC

Mailing Address Information For Non-Applicant Assignee:

Address 1	24 Wood Duck Ct.		
Address 2			
City	Hilton Head	**State/Province**	SC
Country i	US	Postal Code	29928
Phone Number		Fax Number	
Email Address			

Additional Assignee Data may be generated within this form by selecting the Add button. Add

Signature:

Remove

NOTE: This form must be signed in accordance with 37 CFR 1.33. See 37 CFR 1.4 for signature requirements and certifications.

Signature	/David J. Connaughton, Jr./			Date (YYYY-MM-DD)	2016-02-16
First Name	David	Last Name	Connaughton	Registration Number	67275

Additional Signature may be generated within this form by selecting the Add button. Add

This collection of information is required by 37 CFR 1.76. The information is required to obtain or retain a benefit by the public which is to file (and by the USPTO to process) an application. Confidentiality is governed by 35 U.S.C. 122 and 37 CFR 1.14. This collection is estimated to take 23 minutes to complete, including gathering, preparing, and submitting the completed application data sheet form to the USPTO. Time will vary depending upon the individual case. Any comments on the amount of time you require to complete this form and/or suggestions for reducing this burden, should be sent to the Chief Information Officer, U.S. Patent and Trademark Office, U.S. Department of Commerce, P.O. Box 1450, Alexandria, VA 22313-1450. DO NOT SEND FEES OR COMPLETED FORMS TO THIS ADDRESS. **SEND TO: Commissioner for Patents, P.O. Box 1450, Alexandria, VA 22313-1450.**

Privacy Act Statement

The Privacy Act of 1974 (P.L. 93-579) requires that you be given certain information in connection with your submission of the attached form related to a patent application or patent. Accordingly, pursuant to the requirements of the Act, please be advised that: (1) the general authority for the collection of this information is 35 U.S.C. 2(b)(2); (2) furnishing of the information solicited is voluntary; and (3) the principal purpose for which the information is used by the U.S. Patent and Trademark Office is to process and/or examine your submission related to a patent application or patent. If you do not furnish the requested information, the U.S. Patent and Trademark Office may not be able to process and/or examine your submission, which may result in termination of proceedings or abandonment of the application or expiration of the patent.

The information provided by you in this form will be subject to the following routine uses:

1. The information on this form will be treated confidentially to the extent allowed under the Freedom of Information Act (5 U.S.C. 552) and the Privacy Act (5 U.S.C. 552a). Records from this system of records may be disclosed to the Department of Justice to determine whether the Freedom of Information Act requires disclosure of these records.

2. A record from this system of records may be disclosed, as a routine use, in the course of presenting evidence to a court, magistrate, or administrative tribunal, including disclosures to opposing counsel in the course of settlement negotiations.

3. A record in this system of records may be disclosed, as a routine use, to a Member of Congress submitting a request involving an individual, to whom the record pertains, when the individual has requested assistance from the Member with respect to the subject matter of the record.

4. A record in this system of records may be disclosed, as a routine use, to a contractor of the Agency having need for the information in order to perform a contract. Recipients of information shall be required to comply with the requirements of the Privacy Act of 1974, as amended, pursuant to 5 U.S.C. 552a(m).

5. A record related to an International Application filed under the Patent Cooperation Treaty in this system of records may be disclosed, as a routine use, to the International Bureau of the World Intellectual Property Organization, pursuant to the Patent Co o p eration Treaty.

6. A record in this system of records may be disclosed, as a routine use, to another federal agency for purposes of National Security review (35 U.S.C. 181) and for review pursuant to the Atomic Energy Act (42 U.S.C. 218(c)).

7. A record from this system of records may be disclosed, as a routine use, to the Administrator, General Services, or his/her designee, during an inspection of records conducted by GSA as part of that agency's responsibility to recommend improvements in records management practices and programs, under authority of 44 U.S.C. 2904 and 2906. Such disclosure shall be made in accordance with the GSA regulations governing inspection of records for this purpose, and any other relevant (i.e., GSA or Commerce) directive. Such disclosure shall not be used to make determinations about individuals.

8. A record from this system of records may be disclosed, as a routine use, to the public after either publication of the application pursuant to 35 U.S.C. 122(b) or issuance of a patent pursuant to 35 U.S.C. 151. Further, a record may be disclosed, subject to the limitations of 37 CFR 1.14, as a routine use, to the public if the record was filed in an application which became abandoned or in which the proceedings were terminated and which application is referenced by either a published application, an application open to public inspections or an issued patent.

9. A record from this system of records may be disclosed, as a routine use, to a Federal, State, or local law enforcement agency, if the USPTO becomes aware of a violation or potential violation of law or regulation.

PATENT APPLICATION FEE DETERMINATION RECORD

Substitute for Form PTO-875

Application or Docket Number
15/679,206

APPLICATION AS FILED - PART I

FOR	(Column 1) NUMBER FILED	(Column 2) NUMBER EXTRA	SMALL ENTITY RATE($)	SMALL ENTITY FEE($)	OR	OTHER THAN SMALL ENTITY RATE($)	OTHER THAN SMALL ENTITY FEE($)
BASIC FEE (37 CFR 1.16(a), (b), or (c))	N/A	N/A	N/A	70		N/A	
SEARCH FEE (37 CFR 1.16(k), (i), or (m))	N/A	N/A	N/A	300		N/A	
EXAMINATION FEE (37 CFR 1.16(o), (p), or (q))	N/A	N/A	N/A	360		N/A	
TOTAL CLAIMS (37 CFR 1.16(i))	14 minus 20 =	*	x 40 =	0.00	OR		
INDEPENDENT CLAIMS (37 CFR 1.16(h))	2 minus 3 =	*	x 210 =	0.00			
APPLICATION SIZE FEE (37 CFR 1.16(s))	If the specification and drawings exceed 100 sheets of paper, the application size fee due is $310 ($155 for small entity) for each additional 50 sheets or fraction thereof. See 35 U.S.C. 41(a)(1)(G) and 37 CFR 1.16(s).			0.00			
MULTIPLE DEPENDENT CLAIM PRESENT (37 CFR 1.16(j))				0.00			
* If the difference in column 1 is less than zero, enter "0" in column 2.			TOTAL	730		TOTAL	

APPLICATION AS AMENDED - PART II

		(Column 1) CLAIMS REMAINING AFTER AMENDMENT		(Column 2) HIGHEST NUMBER PREVIOUSLY PAID FOR	(Column 3) PRESENT EXTRA	SMALL ENTITY RATE($)	SMALL ENTITY ADDITIONAL FEE($)	OR	OTHER THAN SMALL ENTITY RATE($)	OTHER THAN SMALL ENTITY ADDITIONAL FEE($)
AMENDMENT A	Total (37 CFR 1.16(i))	*	Minus	**	=	x =		OR	x =	
AMENDMENT A	Independent (37 CFR 1.16(h))	*	Minus	***	=	x =		OR	x =	
AMENDMENT A	Application Size Fee (37 CFR 1.16(s))									
AMENDMENT A	FIRST PRESENTATION OF MULTIPLE DEPENDENT CLAIM (37 CFR 1.16(j))							OR		
						TOTAL ADD'L FEE		OR	TOTAL ADD'L FEE	

		(Column 1) CLAIMS REMAINING AFTER AMENDMENT		(Column 2) HIGHEST NUMBER PREVIOUSLY PAID FOR	(Column 3) PRESENT EXTRA	RATE($)	ADDITIONAL FEE($)	OR	RATE($)	ADDITIONAL FEE($)
AMENDMENT B	Total (37 CFR 1.16(i))	*	Minus	**	=	x =		OR	x =	
AMENDMENT B	Independent (37 CFR 1.16(h))	*	Minus	***	=	x =		OR	x =	
AMENDMENT B	Application Size Fee (37 CFR 1.16(s))									
AMENDMENT B	FIRST PRESENTATION OF MULTIPLE DEPENDENT CLAIM (37 CFR 1.16(j))							OR		
						TOTAL ADD'L FEE		OR	TOTAL ADD'L FEE	

* If the entry in column 1 is less than the entry in column 2, write "0" in column 3.
** If the "Highest Number Previously Paid For" IN THIS SPACE is less than 20, enter "20".
*** If the "Highest Number Previously Paid For" IN THIS SPACE is less than 3, enter "3".
The "Highest Number Previously Paid For" (Total or Independent) is the highest found in the appropriate box in column 1.

UNITED STATES PATENT AND TRADEMARK OFFICE

UNITED STATES DEPARTMENT OF COMMERCE
United States Patent and Trademark Office
Address: COMMISSIONER FOR PATENTS
P.O. Box 1450
Alexandria, Virginia 22313-1450
www.uspto.gov

APPLICATION NUMBER	FILING or 371(c) DATE	GRP ART UNIT	FIL FEE REC'D	ATTY.DOCKET.NO	TOT CLAIMS	IND CLAIMS
15/679,206	08/17/2017		730	16-030-SG	14	2

CONFIRMATION NO. 2672

FILING RECEIPT

32118
LAMBERT & ASSOCIATES
92 STATE STREET
BOSTON, MA 02109-2004

OC000000094768815

Date Mailed: 10/17/2017

Receipt is acknowledged of this non-provisional patent application. The application will be taken up for examination in due course. Applicant will be notified as to the results of the examination. Any correspondence concerning the application must include the following identification information: the U.S. APPLICATION NUMBER, FILING DATE, NAME OF APPLICANT, and TITLE OF INVENTION. Fees transmitted by check or draft are subject to collection. Please verify the accuracy of the data presented on this receipt. **If an error is noted on this Filing Receipt, please submit a written request for a Filing Receipt Correction. Please provide a copy of this Filing Receipt with the changes noted thereon. If you received a "Notice to File Missing Parts" for this application, please submit any corrections to this Filing Receipt with your reply to the Notice. When the USPTO processes the reply to the Notice, the USPTO will generate another Filing Receipt incorporating the requested corrections**

Inventor(s)
Sharon Goff, Hilton Head, SC;

Applicant(s)
Sharon Goff, Hilton Head, SC;

Assignment For Published Patent Application
SherryWear LLC, Hilton Head, SC

Power of Attorney: The patent practitioners associated with Customer Number 32118

Domestic Priority data as claimed by applicant
This application is a CON of 15/045,606 02/17/2016
which is a CIP of 14/082,777 11/18/2013 PAT 9295288
which is a CIP of 13/066,822 04/26/2011 PAT 8597072

Foreign Applications for which priority is claimed (You may be eligible to benefit from the **Patent Prosecution Highway** program at the USPTO. Please see http://www.uspto.gov for more information.) - None.
Foreign application information must be provided in an Application Data Sheet in order to constitute a claim to foreign priority. See 37 CFR 1.55 and 1.76.

Permission to Access Application via Priority Document Exchange: No

Permission to Access Search Results: No

Applicant may provide or rescind an authorization for access using Form PTO/SB/39 or Form PTO/SB/69 as appropriate.

If Required, Foreign Filing License Granted: 10/16/2017

The country code and number of your priority application, to be used for filing abroad under the Paris Convention, is **US 15/679,206**

Projected Publication Date: Request for Non-Publication Acknowledged

Non-Publication Request: Yes

Early Publication Request: No
**** SMALL ENTITY ****
Title

POCKET BRA SYSTEM

Preliminary Class

Statement under 37 CFR 1.55 or 1.78 for AIA (First Inventor to File) Transition Applications: Yes

PROTECTING YOUR INVENTION OUTSIDE THE UNITED STATES

Since the rights granted by a U.S. patent extend only throughout the territory of the United States and have no effect in a foreign country, an inventor who wishes patent protection in another country must apply for a patent in a specific country or in regional patent offices. Applicants may wish to consider the filing of an international application under the Patent Cooperation Treaty (PCT). An international (PCT) application generally has the same effect as a regular national patent application in each PCT-member country. The PCT process **simplifies** the filing of patent applications on the same invention in member countries, but **does not result** in a grant of "an international patent" and does not eliminate the need of applicants to file additional documents and fees in countries where patent protection is desired.

Almost every country has its own patent law, and a person desiring a patent in a particular country must make an application for patent in that country in accordance with its particular laws. Since the laws of many countries differ in various respects from the patent law of the United States, applicants are advised to seek guidance from specific foreign countries to ensure that patent rights are not lost prematurely.

Applicants also are advised that in the case of inventions made in the United States, the Director of the USPTO must issue a license before applicants can apply for a patent in a foreign country. The filing of a U.S. patent application serves as a request for a foreign filing license. The application's filing receipt contains further information and guidance as to the status of applicant's license for foreign filing.

Applicants may wish to consult the USPTO booklet, "General Information Concerning Patents" (specifically, the section entitled "Treaties and Foreign Patents") for more information on timeframes and deadlines for filing foreign patent applications. The guide is available either by contacting the USPTO Contact Center at 800-786-9199, or it can be viewed on the USPTO website at http://www.uspto.gov/web/offices/pac/doc/general/index.html.

For information on preventing theft of your intellectual property (patents, trademarks and copyrights), you may wish to consult the U.S. Government website, http://www.stopfakes.gov. Part of a Department of Commerce initiative, this website includes self-help "toolkits" giving innovators guidance on how to protect intellectual property in specific countries such as China, Korea and Mexico. For questions regarding patent enforcement issues, applicants may call the U.S. Government hotline at 1-866-999-HALT (1-866-999-4258).

LICENSE FOR FOREIGN FILING UNDER

Title 35, United States Code, Section 184

Title 37, Code of Federal Regulations, 5.11 & 5.15

GRANTED

The applicant has been granted a license under 35 U.S.C. 184, if the phrase "IF REQUIRED, FOREIGN FILING LICENSE GRANTED" followed by a date appears on this form. Such licenses are issued in all applications where the conditions for issuance of a license have been met, regardless of whether or not a license may be required as set forth in 37 CFR 5.15. The scope and limitations of this license are set forth in 37 CFR 5.15(a) unless an earlier license has been issued under 37 CFR 5.15(b). The license is subject to revocation upon written notification. The date indicated is the effective date of the license, unless an earlier license of similar scope has been granted under 37 CFR 5.13 or 5.14.

This license is to be retained by the licensee and may be used at any time on or after the effective date thereof unless it is revoked. This license is automatically transferred to any related applications(s) filed under 37 CFR 1.53(d). This license is not retroactive.

The grant of a license does not in any way lessen the responsibility of a licensee for the security of the subject matter as imposed by any Government contract or the provisions of existing laws relating to espionage and the national security or the export of technical data. Licensees should apprise themselves of current regulations especially with respect to certain countries, of other agencies, particularly the Office of Defense Trade Controls, Department of State (with respect to Arms, Munitions and Implements of War (22 CFR 121-128)); the Bureau of Industry and Security, Department of Commerce (15 CFR parts 730-774); the Office of Foreign AssetsControl, Department of Treasury (31 CFR Parts 500+) and the Department of Energy.

NOT GRANTED

No license under 35 U.S.C. 184 has been granted at this time, if the phrase "IF REQUIRED, FOREIGN FILING LICENSE GRANTED" DOES NOT appear on this form. Applicant may still petition for a license under 37 CFR 5.12, if a license is desired before the expiration of 6 months from the filing date of the application. If 6 months has lapsed from the filing date of this application and the licensee has not received any indication of a secrecy order under 35 U.S.C. 181, the licensee may foreign file the application pursuant to 37 CFR 5.15(b).

SelectUSA

The United States represents the largest, most dynamic marketplace in the world and is an unparalleled location for business investment, innovation, and commercialization of new technologies. The U.S. offers tremendous resources and advantages for those who invest and manufacture goods here. Through SelectUSA, our nation works to promote and facilitate business investment. SelectUSA provides information assistance to the international investor community; serves as an ombudsman for existing and potential investors; advocates on behalf of U.S. cities, states, and regions competing for global investment; and counsels U.S. economic development organizations on investment attraction best practices. To learn more about why the United States is the best country in the world to develop technology, manufacture products, deliver services, and grow your business, visit http://www.SelectUSA.gov or call +1-202-482-6800.

To: lambert@lambertpatentlaw.com,shortell@lambertpatentlaw.com,connaughton@lambertpatentlaw.com
From: PAIR_eOfficeAction@uspto.gov
Cc: PAIR_eOfficeAction@uspto.gov
Subject: Private PAIR Correspondence Notification for Customer Number 32118

Oct 17, 2017 05:21:11 AM

Dear PAIR Customer:

LAMBERT & ASSOCIATES
92 STATE STREET
BOSTON, MA 02109-2004
UNITED STATES

The following USPTO patent application(s) associated with your Customer Number, 32118 , have new outgoing correspondence. This correspondence is now available for viewing in Private PAIR.

The official date of notification of the outgoing correspondence will be indicated on the form PTOL-90 accompanying the correspondence.

Disclaimer:
The list of documents shown below is provided as a courtesy and is not part of the official file wrapper. The content of the images shown in PAIR is the official record.

Application	Document	Mailroom Date	Attorney Docket No.
15679206	APP.FILE.REC	10/17/2017	16-030-SG

To view your correspondence online or update your email addresses, please visit us anytime at https://sportal.uspto.gov/secure/myportal/privatepair.

If you have any questions, please email the Electronic Business Center (EBC) at EBC@uspto.gov with 'e-Office Action' on the subject line or call 1-866-217-9197 during the following hours:

Monday - Friday 6:00 a.m. to 12:00 a.m.

Thank you for prompt attention to this notice,

UNITED STATES PATENT AND TRADEMARK OFFICE

PATENT APPLICATION INFORMATION RETRIEVAL SYSTEM

UNITED STATES PATENT AND TRADEMARK OFFICE

UNITED STATES DEPARTMENT OF COMMERCE
United States Patent and Trademark Office
Address: COMMISSIONER FOR PATENTS
P.O. Box 1450
Alexandria, Virginia 22313-1450
www.uspto.gov

APPLICATION NO.	FILING DATE	FIRST NAMED INVENTOR	ATTORNEY DOCKET NO.	CONFIRMATION NO.
15/679,206	08/17/2017	Sharon Goff	17-095-SG	2672

32118 7590 03/22/2018
LAMBERT & ASSOCIATES
92 STATE STREET
BOSTON, MA 02109-2004

EXAMINER
HALE, GLORIA M

ART UNIT	PAPER NUMBER
3765	

NOTIFICATION DATE	DELIVERY MODE
03/22/2018	ELECTRONIC

Please find below and/or attached an Office communication concerning this application or proceeding.

The time period for reply, if any, is set in the attached communication.

Notice of the Office communication was sent electronically on above-indicated "Notification Date" to the following e-mail address(es):

info@lambertpatentlaw.com

Office Action Summary	Application No. 15/679,206	Applicant(s) GOFF, SHARON	
	Examiner GLORIA HALE	Art Unit 3765	AIA (First Inventor to File) Status Yes

-- The MAILING DATE of this communication appears on the cover sheet with the correspondence address --

Period for Reply

A SHORTENED STATUTORY PERIOD FOR REPLY IS SET TO EXPIRE 3 MONTHS FROM THE MAILING DATE OF THIS COMMUNICATION.

- Extensions of time may be available under the provisions of 37 CFR 1.136(a). In no event, however, may a reply be timely filed after SIX (6) MONTHS from the mailing date of this communication.
- If NO period for reply is specified above, the maximum statutory period will apply and will expire SIX (6) MONTHS from the mailing date of this communication.
- Failure to reply within the set or extended period for reply will, by statute, cause the application to become ABANDONED (35 U.S.C. § 133). Any reply received by the Office later than three months after the mailing date of this communication, even if timely filed, may reduce any earned patent term adjustment. See 37 CFR 1.704(b).

Status

1)☐ Responsive to communication(s) filed on _____.

☐ A declaration(s)/affidavit(s) under **37 CFR 1.130(b)** was/were filed on _____.

2a)☐ This action is **FINAL**. 2b)☒ This action is non-final.

3)☐ An election was made by the applicant in response to a restriction requirement set forth during the interview on _____; the restriction requirement and election have been incorporated into this action.

4)☐ Since this application is in condition for allowance except for formal matters, prosecution as to the merits is closed in accordance with the practice under *Ex parte Quayle*, 1935 C.D. 11, 453 O.G. 213.

Disposition of Claims*

5)☒ Claim(s) 1-14 is/are pending in the application.

5a) Of the above claim(s) _____ is/are withdrawn from consideration.

6)☐ Claim(s) _____ is/are allowed.

7)☒ Claim(s) 1-14 is/are rejected.

8)☐ Claim(s) _____ is/are objected to.

9)☐ Claim(s) _____ are subject to restriction and/or election requirement.

* If any claims have been determined allowable, you may be eligible to benefit from the **Patent Prosecution Highway** program at a participating intellectual property office for the corresponding application. For more information, please see http://www.uspto.gov/patents/init_events/pph/index.jsp or send an inquiry to PPHfeedback@uspto.gov.

Application Papers

10)☐ The specification is objected to by the Examiner.

11)☒ The drawing(s) filed on 8-17-17 is/are: a)☒ accepted or b)☐ objected to by the Examiner.

Applicant may not request that any objection to the drawing(s) be held in abeyance. See 37 CFR 1.85(a).

Replacement drawing sheet(s) including the correction is required if the drawing(s) is objected to. See 37 CFR 1.121(d).

Priority under 35 U.S.C. § 119

12)☐ Acknowledgment is made of a claim for foreign priority under 35 U.S.C. § 119(a)-(d) or (f).

Certified copies:

a)☐ All b)☐ Some** c)☐ None of the:

1.☐ Certified copies of the priority documents have been received.

2.☐ Certified copies of the priority documents have been received in Application No. _____.

3.☐ Copies of the certified copies of the priority documents have been received in this National Stage application from the International Bureau (PCT Rule 17.2(a)).

** See the attached detailed Office action for a list of the certified copies not received.

Attachment(s)

1) ☒ Notice of References Cited (PTO-892)

2) ☐ Information Disclosure Statement(s) (PTO/SB/08a and/or PTO/SB/08b) Paper No(s)/Mail Date _____.

3) ☐ Interview Summary (PTO-413) Paper No(s)/Mail Date. _____ .

4) ☐ Other: _____.

DETAILED ACTION

Notice of Pre-AIA or AIA Status

The present application, filed on or after March 16, 2013, is being examined under the first inventor to file provisions of the AIA.

Double Patenting

The nonstatutory double patenting rejection is based on a judicially created doctrine grounded in public policy (a policy reflected in the statute) so as to prevent the unjustified or improper timewise extension of the "right to exclude" granted by a patent and to prevent possible harassment by multiple assignees. A nonstatutory double patenting rejection is appropriate where the conflicting claims are not identical, but at least one examined application claim is not patentably distinct from the reference claim(s) because the examined application claim is either anticipated by, or would have been obvious over, the reference claim(s). See, e.g., *In re Berg*, 140 F.3d 1428, 46 USPQ2d 1226 (Fed. Cir. 1998); *In re Goodman*, 11 F.3d 1046, 29 USPQ2d 2010 (Fed. Cir. 1993); *In re Longi*, 759 F.2d 887, 225 USPQ 645 (Fed. Cir. 1985); *In re Van Ornum*, 686 F.2d 937, 214 USPQ 761 (CCPA 1982); *In re Vogel*, 422 F.2d 438, 164 USPQ 619 (CCPA 1970); *In re Thorington*, 418 F.2d 528, 163 USPQ 644 (CCPA 1969).

A timely filed terminal disclaimer in compliance with 37 CFR 1.321(c) or 1.321(d) may be used to overcome an actual or provisional rejection based on nonstatutory double patenting provided the reference application or patent either is shown to be commonly owned with the examined application, or claims an invention made as a result of activities undertaken within the scope of a joint research agreement. See

MPEP § 717.02 for applications subject to examination under the first inventor to file provisions of the AIA as explained in MPEP § 2159. See MPEP §§ 706.02(l)(1) - 706.02(l)(3) for applications not subject to examination under the first inventor to file provisions of the AIA. A terminal disclaimer must be signed in compliance with 37 CFR 1.321(b).

The USPTO Internet website contains terminal disclaimer forms which may be used. Please visit www.uspto.gov/patent/patents-forms. The filing date of the application in which the form is filed determines what form (e.g., PTO/SB/25, PTO/SB/26, PTO/AIA/25, or PTO/AIA/26) should be used. A web-based eTerminal Disclaimer may be filled out completely online using web-screens. An eTerminal Disclaimer that meets all requirements is auto-processed and approved immediately upon submission. For more information about eTerminal Disclaimers, refer to www.uspto.gov/patents/process/file/efs/guidance/eTD-info-I.jsp.

Claims 1-14 are rejected on the ground of nonstatutory double patenting as being unpatentable over claims 1-17 of U.S. Patent No. 9295288 and claims 1-21 of U.S. Patent No. 9808036. Although the claims at issue are not identical, they are not patentably distinct from each other because the same cup pocket structure is claimed as in claims 1-14.

Claims 1-14 will be allowed with the submission of the proper Terminal Disclaimers.

Conclusion

The prior art made of record and not relied upon is considered pertinent to applicant's disclosure.

Any inquiry concerning this communication or earlier communications from the examiner should be directed to GLORIA HALE whose telephone number is (571)272-4984. The examiner can normally be reached on Mon.-Thurs..

Examiner interviews are available via telephone, in-person, and video conferencing using a USPTO supplied web-based collaboration tool. To schedule an interview, applicant is encouraged to use the USPTO Automated Interview Request (AIR) at http://www.uspto.gov/interviewpractice.

If attempts to reach the examiner by telephone are unsuccessful, the examiner's supervisor, Khoa Huynh can be reached on 571-272-4888. The fax phone number for the organization where this application or proceeding is assigned is 571-273-8300.

Information regarding the status of an application may be obtained from the Patent Application Information Retrieval (PAIR) system. Status information for published applications may be obtained from either Private PAIR or Public PAIR. Status information for unpublished applications is available through Private PAIR only. For more information about the PAIR system, see http://pair-direct.uspto.gov.

Should you have questions on access to the Private PAIR system, contact the Electronic Business Center (EBC) at 866-217-9197 (toll-free). If you would like assistance from a USPTO Customer Service Representative or access to the automated information system, call 800-786-9199 (IN USA OR CANADA) or 571-272-1000.

/GLORIA HALE/
Primary Examiner, Art Unit 3765

Notice of References Cited	Application/Control No. 15/679,206	Applicant(s)/Patent Under Reexamination GOFF, SHARON	
	Examiner GLORIA HALE	Art Unit 3765	Page 1 of 2

U.S. PATENT DOCUMENTS

*		Document Number Country Code-Number-Kind Code	Date MM-YYYY	Name	CPC Classification	US Classification
*	A	US-2,624,881 A	01-1953	DUNSON LEE JENNIE	A41C3/0035	2/247
*	B	US-3,747,545 A	07-1973	Nicolay; Karl	D05B3/10	112/68
*	C	US-4,263,678 A	04-1981	Off; Joseph W. A.	A41D27/20	2/247
*	D	US-4,699,144 A	10-1987	Sherwood; Janice K.	A41C3/148	450/54
*	E	US-5,395,280 A	03-1995	Greenberg; Bert	A41C3/148	2/247
*	F	US-5,496,205 A	03-1996	Lee; Lausanne	A41C3/0035	2/247
*	G	US-5,799,336 A	09-1998	Cooper; Meredith K.	A41D27/20	2/247
*	H	US-7,585,200 B1	09-2009	McLaren; Laura	A41C3/0035	2/247
*	I	US-7,753,759 B2	07-2010	Pintor; Tammy	A41C3/0035	450/54
*	J	US-8,257,140 B2	09-2012	Kenny; Judith Ann	A41C3/12	2/247
*	K	US-8,597,072 B1	12-2013	Lucas; Sharon J.	A41C3/0035	2/247
*	L	US-2008/0032600 A1	02-2008	Updyke; Lauren Grace	A41C3/0035	450/89
*	M	US-2009/0104845 A1	04-2009	Pintor; Tammy	A41C3/0035	450/31

FOREIGN PATENT DOCUMENTS

*		Document Number Country Code-Number-Kind Code	Date MM-YYYY	Country	Name	CPC Classification
	N					
	O					
	P					
	Q					
	R					
	S					
	T					

NON-PATENT DOCUMENTS

*		Include as applicable: Author, Title Date, Publisher, Edition or Volume, Pertinent Pages)
	U	
	V	
	W	
	X	

*A copy of this reference is not being furnished with this Office action. (See MPEP § 707.05(a).)
Dates in MM-YYYY format are publication dates. Classifications may be US or foreign.

Notice of References Cited	Application/Control No. 15/679,206	Applicant(s)/Patent Under Reexamination GOFF, SHARON	
	Examiner GLORIA HALE	Art Unit 3765	Page 2 of 2

U.S. PATENT DOCUMENTS

*		Document Number Country Code-Number-Kind Code	Date MM-YYYY	Name	CPC Classification	US Classification
*	A	US-2009/0209173 A1	08-2009	Arledge; Marguerite Linne	A41C3/0035	450/39
*	B	US-2010/0124869 A1	05-2010	Liu; Zhen Qiang	A41C3/10	450/39
*	C	US-9,295,288 B1	03-2016	Goff; Sharon J.	A41C3/0035	1/1
*	D	US-9,808,036 B1	11-2017	Goff; Sharon	A41C3/0035	1/1
	E	US-				
	F	US-				
	G	US-				
	H	US-				
	I	US-				
	J	US-				
	K	US-				
	L	US-				
	M	US-				

FOREIGN PATENT DOCUMENTS

*		Document Number Country Code-Number-Kind Code	Date MM-YYYY	Country	Name	Classification
	N					
	O					
	P					
	Q					
	R					
	S					
	T					

NON-PATENT DOCUMENTS

*		Include as applicable: Author, Title Date, Publisher, Edition or Volume, Pertinent Pages)
	U	
	V	
	W	
	X	

*A copy of this reference is not being furnished with this Office action. (See MPEP § 707.05(a).)
Dates in MM-YYYY format are publication dates. Classifications may be US or foreign.

Search Notes	Application/Control No.	Applicant(s)/Patent Under Reexamination
	15679206	GOFF, SHARON
	Examiner	**Art Unit**
	GLORIA HALE	3765

CPC- SEARCHED

Symbol	Date	Examiner
A41C3/00,10,12,0035,148	3-12-18	gh

CPC COMBINATION SETS - SEARCHED

Symbol	Date	Examiner

US CLASSIFICATION SEARCHED

Class	Subclass	Date	Examiner
450	89,54-57,36,39		
2	247-251	3-12-18	gh

* See search history printout included with this form or the SEARCH NOTES box below to determine the scope of the search.

SEARCH NOTES

Search Notes	Date	Examiner
inv name srch;ids flag clred	3-12-18	gh

INTERFERENCE SEARCH

US Class/ CPC Symbol	US Subclass / CPC Group	Date	Examiner

	/GLORIA HALE/ Primary Examiner.Art Unit 3765

Index of Claims	Application/Control No.	Applicant(s)/Patent Under Reexamination
	15679206	GOFF, SHARON
	Examiner	**Art Unit**
	GLORIA HALE	3765

✓	Rejected	-	Cancelled	N	Non-Elected	A	Appeal
=	Allowed	÷	Restricted	I	Interference	O	Objected

☐ Claims renumbered in the same order as presented by applicant ☐ CPA ☐ T.D. ☐ R.1.47

CLAIM		DATE								
Final	Original	03/17/2018								
	1	✓								
	2	✓								
	3	✓								
	4	✓								
	5	✓								
	6	✓								
	7	✓								
	8	✓								
	9	✓								
	10	✓								
	11	✓								
	12	✓								
	13	✓								
	14	✓								

To: info@lambertpatentlaw.com,,
From: PAIR_eOfficeAction@uspto.gov
Cc: PAIR_eOfficeAction@uspto.gov
Subject: Private PAIR Correspondence Notification for Customer Number 32118

Mar 22, 2018 04:22:31 AM

Dear PAIR Customer:

LAMBERT & ASSOCIATES
92 STATE STREET
BOSTON, MA 02109-2004
UNITED STATES

The following USPTO patent application(s) associated with your Customer Number, 32118 , have new outgoing correspondence. This correspondence is now available for viewing in Private PAIR.

The official date of notification of the outgoing correspondence will be indicated on the form PTOL-90 accompanying the correspondence.

Disclaimer:
The list of documents shown below is provided as a courtesy and is not part of the official file wrapper. The content of the images shown in PAIR is the official record.

Application	Document	Mailroom Date	Attorney Docket No.
15679206	CTNF	03/22/2018	17-095-SG
	892	03/22/2018	17-095-SG

To view your correspondence online or update your email addresses, please visit us anytime at https://sportal.uspto.gov/secure/myportal/privatepair.

If you have any questions, please email the Electronic Business Center (EBC) at EBC@uspto.gov with 'e-Office Action' on the subject line or call 1-866-217-9197 during the following hours:

Monday - Friday 6:00 a.m. to 12:00 a.m.

Thank you for prompt attention to this notice,

UNITED STATES PATENT AND TRADEMARK OFFICE

PATENT APPLICATION INFORMATION RETRIEVAL SYSTEM

UNITED STATES PATENT AND TRADEMARK OFFICE

UNITED STATES DEPARTMENT OF COMMERCE
United States Patent and Trademark Office
Address: COMMISSIONER FOR PATENTS
P.O. Box 1450
Alexandria, Virginia 22313-1450
www.uspto.gov

APPLICATION NO.	FILING DATE	FIRST NAMED INVENTOR	ATTORNEY DOCKET NO.	CONFIRMATION NO.
15/679,206	08/17/2017	Sharon Goff	17-095-SG	2672

32118 7590 09/27/2018
LAMBERT & ASSOCIATES
92 STATE STREET
BOSTON, MA 02109-2004

EXAMINER
HALE, GLORIA M

ART UNIT	PAPER NUMBER
3765	

NOTIFICATION DATE	DELIVERY MODE
09/27/2018	ELECTRONIC

Please find below and/or attached an Office communication concerning this application or proceeding.

The time period for reply, if any, is set in the attached communication.

Notice of the Office communication was sent electronically on above-indicated "Notification Date" to the following e-mail address(es):

info@lambertpatentlaw.com

Notice of Abandonment	Application No.	Applicant(s)
	15/679,206	GOFF, SHARON
	Examiner	**Art Unit**
	GLORIA HALE	3765

-- The MAILING DATE of this communication appears on the cover sheet with the correspondence address--

This application is abandoned in view of:

1. ☒ Applicant's failure to timely file a proper reply to the Office letter mailed on *22 March 2018*.
   (a) ☐ A reply was received on _____ (with a Certificate of Mailing or Transmission dated _____), which is after the expiration of the period for reply (including a total extension of time of _____ month(s)) which expired on _____.
   (b) ☐ A proposed reply was received on _____, but it does not constitute a proper reply under 37 CFR 1.113 to the final rejection.
   (A proper reply under 37 CFR 1.113 to a final rejection consists only of: (1) a timely filed amendment which places the application in condition for allowance; (2) a timely filed Notice of Appeal (with appeal fee); or (3) if this is utility or plant application, a timely filed Request for Continued Examination (RCE) in compliance with 37 CFR 1.114. Note that RCEs are not permitted in design applications.)
   (c) ☐ A reply was received on _____ but it does not constitute a proper reply, or a bona fide attempt at a proper reply, to the non-final rejection. See 37 CFR 1.85(a) and 1.111. (See explanation in box 7 below).
   (d) ☒ No reply has been received.

2. ☐ Applicant's failure to timely pay the required issue fee and publication fee, if applicable, within the statutory period of three months from the mailing date of the Notice of Allowance (PTOL-85).
   (a) ☐ The issue fee and publication fee, if applicable, was received on _____ (with a Certificate of Mailing or Transmission dated _____), which is after the expiration of the statutory period for payment of the issue fee (and publication fee) set in the Notice of Allowance (PTOL-85).
   (b) ☐ The submitted fee of $_____ is insufficient. A balance of $_____ is due.
   The issue fee required by 37 CFR 1.18 is $_____. The publication fee, if required by 37 CFR 1.18(d), is $_____.
   (c) ☐ The issue fee and publication fee, if applicable, has not been received.

3. ☐ Applicant's failure to timely file corrected drawings as required by, and within the three-month period set in, the Notice of Allowability (PTO-37).
   (a) ☐ Proposed corrected drawings were received on _____ (with a Certificate of Mailing or Transmission dated _____), which is after the expiration of the period for reply.
   (b) ☐ No corrected drawings have been received.

4. ☐ The letter of express abandonment which is signed by the attorney or agent of record or other party authorized under 37 CFR 1.33(b). See 37 CFR 1.138(b).

5. ☐ The letter of express abandonment which is signed by an attorney or agent (acting in a representative capacity under 37 CFR 1.34) upon the filing of a continuing application.

6. ☐ The decision by the Board of Patent Appeals and Interference rendered on _____ and because the period for seeking court review of the decision has expired and there are no allowed claims.

7. ☐ The reason(s) below:

/GLORIA HALE/
Primary Examiner, Art Unit 3765

Petitions to revive under 37 CFR 1.137, or requests to withdraw the holding of abandonment under 37 CFR 1.181, should be promptly filed to minimize any negative effects on patent term.

Electronic Patent Application Fee Transmittal

Application Number:	15679206
Filing Date:	17-Aug-2017
Title of Invention:	POCKET BRA SYSTEM
First Named Inventor/Applicant Name:	Sharon Goff
Filer:	Gary Ervery Lambert
Attorney Docket Number:	17-095-SG

Filed as Small Entity

Filing Fees for Utility under 35 USC 111(a)

Description	Fee Code	Quantity	Amount	Sub-Total in USD($)
Basic Filing:				
Pages:				
Claims:				
Miscellaneous-Filing:				
Petition:				
Patent-Appeals-and-Interference:				
Post-Allowance-and-Post-Issuance:				
Extension-of-Time:				

Description	Fee Code	Quantity	Amount	Sub-Total in USD($)
Extension - 3 months with $0 paid	2253	1	700	700
Miscellaneous:				
			Total in USD ($)	**700**

Electronic Acknowledgement Receipt

EFS ID:	33732921
Application Number:	15679206
International Application Number:	
Confirmation Number:	2672
Title of Invention:	POCKET BRA SYSTEM
First Named Inventor/Applicant Name:	Sharon Goff
Customer Number:	32118
Filer:	Gary Ervery Lambert
Filer Authorized By:	
Attorney Docket Number:	17-095-SG
Receipt Date:	15-SEP-2018
Filing Date:	17-AUG-2017
Time Stamp:	09:51:50
Application Type:	Utility under 35 USC 111(a)

Payment information:

Submitted with Payment	yes
Payment Type	CARD
Payment was successfully received in RAM	$700
RAM confirmation Number	091718INTEFSW09521000
Deposit Account	
Authorized User	

The Director of the USPTO is hereby authorized to charge indicated fees and credit any overpayment as follows:

File Listing:

Document Number	Document Description	File Name	File Size(Bytes)/ Message Digest	Multi Part /.zip	Pages (if appl.)
1	Amendment/Req. Reconsideration-After Non-Final Reject	Response-NFOA-17-095-SG.pdf	31797 1bdacccafa5877f450954b0106de51c2b19ce61d	no	6
Warnings:					
Information:					
2	Fee Worksheet (SB06)	fee-info.pdf	30525 0d4e7d302528cdcb859da65fa0d8430f36809c87	no	2
Warnings:					
Information:					
		Total Files Size (in bytes):	62322		

This Acknowledgement Receipt evidences receipt on the noted date by the USPTO of the indicated documents, characterized by the applicant, and including page counts, where applicable. It serves as evidence of receipt similar to a Post Card, as described in MPEP 503.

New Applications Under 35 U.S.C. 111
If a new application is being filed and the application includes the necessary components for a filing date (see 37 CFR 1.53(b)-(d) and MPEP 506), a Filing Receipt (37 CFR 1.54) will be issued in due course and the date shown on this Acknowledgement Receipt will establish the filing date of the application.
National Stage of an International Application under 35 U.S.C. 371
If a timely submission to enter the national stage of an international application is compliant with the conditions of 35 U.S.C. 371 and other applicable requirements a Form PCT/DO/EO/903 indicating acceptance of the application as a national stage submission under 35 U.S.C. 371 will be issued in addition to the Filing Receipt, in due course.
New International Application Filed with the USPTO as a Receiving Office
If a new international application is being filed and the international application includes the necessary components for an international filing date (see PCT Article 11 and MPEP 1810), a Notification of the International Application Number and of the International Filing Date (Form PCT/RO/105) will be issued in due course, subject to prescriptions concerning national security, and the date shown on this Acknowledgement Receipt will establish the international filing date of the application.

Doc Code: DIST.E.FILE **Document Description: Electronic Terminal Disclaimer - Filed**	PTO/SB/26 U.S. Patent and Trademark Office Department of Commerce

Electronic Petition Request	**TERMINAL DISCLAIMER TO OBVIATE A DOUBLE PATENTING REJECTION OVER A "PRIOR" PATENT**
Application Number	15679206
Filing Date	17-Aug-2017
First Named Inventor	Sharon Goff
Attorney Docket Number	17-095-SG
Title of Invention	POCKET BRA SYSTEM

☒ Filing of terminal disclaimer does not obviate requirement for response under 37 CFR 1.111 to outstanding Office Action

☒ This electronic Terminal Disclaimer is not being used for a Joint Research Agreement.

Owner	Percent Interest
SHERRYWEAR LLC	100%

The owner(s) with percent interest listed above in the instant application hereby disclaims, except as provided below, the terminal part of the statutory term of any patent granted on the instant application which would extend beyond the expiration date of the full statutory term of prior patent number(s)

9808036

9295288

as the term of said prior patent is presently shortened by any terminal disclaimer. The owner hereby agrees that any patent so granted on the instant application shall be enforceable only for and during such period that it and the prior patent are commonly owned. This agreement runs with any patent granted on the instant application and is binding upon the grantee, its successors or assigns.

In making the above disclaimer, the owner does not disclaim the terminal part of the term of any patent granted on the instant application that would extend to the expiration date of the full statutory term of the prior patent, "as the term of said prior patent is presently shortened by any terminal disclaimer," in the event that said prior patent later:
- expires for failure to pay a maintenance fee;
- is held unenforceable;
- is found invalid by a court of competent jurisdiction;
- is statutorily disclaimed in whole or terminally disclaimed under 37 CFR 1.321;
- has all claims canceled by a reexamination certificate;
- is reissued; or
- is in any manner terminated prior to the expiration of its full statutory term as presently shortened by any terminal disclaimer.

- [x] Terminal disclaimer fee under 37 CFR 1.20(d) is included with Electronic Terminal Disclaimer request.
- [ ] I certify, in accordance with 37 CFR 1.4(d)(4), that the terminal disclaimer fee under 37 CFR 1.20(d) required for this terminal disclaimer has already been paid in the above-identified application.

Applicant claims the following fee status:

- [x] Small Entity
- [ ] Micro Entity
- [ ] Regular Undiscounted

I hereby declare that all statements made herein of my own knowledge are true and that all statements made on information and belief are believed to be true; and further that these statements were made with the knowledge that willful false statements and the like so made are punishable by fine or imprisonment, or both, under Section 1001 of Title 18 of the United States Code and that such willful false statements may jeopardize the validity of the application or any patent issued thereon.

THIS PORTION MUST BE COMPLETED BY THE SIGNATORY OR SIGNATORIES

I certify, in accordance with 37 CFR 1.4(d)(4) that I am:

- [x] An attorney or agent registered to practice before the Patent and Trademark Office who is of record in this application

  Registration Number 67275

- [ ] A sole inventor
- [ ] A joint inventor; I certify that I am authorized to sign this submission on behalf of all of the inventors as evidenced by the power of attorney in the application
- [ ] A joint inventor; all of whom are signing this request

Signature	/David Connaughton/
Name	David Connaughton

*Statement under 37 CFR 3.73(b) is required if terminal disclaimer is signed by the assignee (owner).
Form PTO/SB/96 may be used for making this certification. See MPEP § 324.

Electronic Patent Application Fee Transmittal

Application Number:	15679206
Filing Date:	17-Aug-2017
Title of Invention:	POCKET BRA SYSTEM
First Named Inventor/Applicant Name:	Sharon Goff
Filer:	Gary Ervery Lambert/David Connaughton
Attorney Docket Number:	17-095-SG

Filed as Small Entity

Filing Fees for Utility under 35 USC 111(a)

Description	Fee Code	Quantity	Amount	Sub-Total in USD($)
Basic Filing:				
STATUTORY OR TERMINAL DISCLAIMER	2814	1	160	160
Pages:				
Claims:				
Miscellaneous-Filing:				
Petition:				
Patent-Appeals-and-Interference:				
Post-Allowance-and-Post-Issuance:				

Description	Fee Code	Quantity	Amount	Sub-Total in USD($)
Extension-of-Time:				
Miscellaneous:				
			Total in USD ($)	**160**

Doc Code: DISQ.E.FILE
Document Description: Electronic Terminal Disclaimer – Approved

Application No.: 15679206

Filing Date: 17-Aug-2017

Applicant/Patent under Reexamination: Goff

Electronic Terminal Disclaimer filed on September 15, 2018

☒ APPROVED

This patent is subject to a terminal disclaimer

☐ DISAPPROVED

Approved/Disapproved by: Electronic Terminal Disclaimer automatically approved by EFS-Web

U.S. Patent and Trademark Office

Electronic Acknowledgement Receipt

EFS ID:	33732917
Application Number:	15679206
International Application Number:	
Confirmation Number:	2672
Title of Invention:	POCKET BRA SYSTEM
First Named Inventor/Applicant Name:	Sharon Goff
Customer Number:	32118
Filer:	Gary Ervery Lambert/David Connaughton
Filer Authorized By:	Gary Ervery Lambert
Attorney Docket Number:	17-095-SG
Receipt Date:	15-SEP-2018
Filing Date:	17-AUG-2017
Time Stamp:	09:45:28
Application Type:	Utility under 35 USC 111(a)

Payment information:

Submitted with Payment	yes
Payment Type	CARD
Payment was successfully received in RAM	$160
RAM confirmation Number	091718INTEFSW09452400
Deposit Account	
Authorized User	
The Director of the USPTO is hereby authorized to charge indicated fees and credit any overpayment as follows:	

File Listing:

Document Number	Document Description	File Name	File Size(Bytes)/ Message Digest	Multi Part /.zip	Pages (if appl.)
1	Terminal Disclaimer-Filed (Electronic)	eTerminal-Disclaimer.pdf	33543 0ffdfc9621aee6159e2429ee119de0e88c8e83c7	no	2
Warnings:					
Information:					
2	Fee Worksheet (SB06)	fee-info.pdf	30517 8eb5d245ded07a31f6e942461bc6ca003881499f	no	2
Warnings:					
Information:					
		Total Files Size (in bytes):	64060		

This Acknowledgement Receipt evidences receipt on the noted date by the USPTO of the indicated documents, characterized by the applicant, and including page counts, where applicable. It serves as evidence of receipt similar to a Post Card, as described in MPEP 503.

New Applications Under 35 U.S.C. 111
If a new application is being filed and the application includes the necessary components for a filing date (see 37 CFR 1.53(b)-(d) and MPEP 506), a Filing Receipt (37 CFR 1.54) will be issued in due course and the date shown on this Acknowledgement Receipt will establish the filing date of the application.
National Stage of an International Application under 35 U.S.C. 371
If a timely submission to enter the national stage of an international application is compliant with the conditions of 35 U.S.C. 371 and other applicable requirements a Form PCT/DO/EO/903 indicating acceptance of the application as a national stage submission under 35 U.S.C. 371 will be issued in addition to the Filing Receipt, in due course.
New International Application Filed with the USPTO as a Receiving Office
If a new international application is being filed and the international application includes the necessary components for an international filing date (see PCT Article 11 and MPEP 1810), a Notification of the International Application Number and of the International Filing Date (Form PCT/RO/105) will be issued in due course, subject to prescriptions concerning national security, and the date shown on this Acknowledgement Receipt will establish the international filing date of the application.

Docket No. 17-159-SG

UNITED STATES PATENT AND TRADEMARK OFFICE

Serial No.: 15/679,206
First Named Inventor: Sharon Goff
Filed: August 17, 2017
Examiner: Hale, Gloria M.
Art Unit: 3765

Lambert & Associates
92 State Street
Boston, MA 02109

Commissioner for Patents
P.O. Box 1450
Alexandria, VA 22313-1450

AMENDMENT IN RESPONSE TO MARCH 22, 2018 OFFICE ACTION

This is a response to the Office Action issued on March 22, 2018 by the U.S. Patent and Trademark Office in connection with the above-identified application. With a three month extension of time, a response to the March 22, 2018 Office Action is due September 22, 2018. Accordingly, this response is being timely filed.

Amendments to the Claims:

This listing of claims will replace all prior versions, and listings, of claims in the application:

1. (Original) A pocket bra comprising:

a strap assembly comprising a chest strap; and comprising left and right cups, each cup being an area to receive a breast of a wearer and having inside and outside surfaces, the strap assembly being attached to the cups whereby the strap assembly connects the cups to the wearer, each cup having upper, lower, interior body facing, and opposite exterior edges;

a patch forming a pocket operatively associated with at least one of the left and right cups, the patch having an upper edge, a lower edge, and an exterior edge, the patch having inside and outside surfaces;

the lower edge of the patch coupled to the bra adjacent to a lower edge of the at least one of the left and right cups, and the exterior edge of the patch coupled adjacent to the exterior edge of the at least one of the left and right cups, a pocket opening formed along the upper edge of the patch being unconnected to the at least one of the left and right cups;

the pocket opening capable of repeated receiving and removal of an item when being worn by the wearer; and

wherein the upper edge of the patch crosses over a surface of the cup to form the opening, the upper edge crossing such that the opening faces the exterior edge of the at least one of the left and right cup to which it is attached.

2. (Original) The pocket bra of claim 1 wherein the patch is operatively associated with only one of the left and right cups.
3. (Original) The pocket bra of claim 1 further comprising a non-padding item positioned in the pocket.
4. (Original) The pocket bra of claim 1 wherein the lower edge of the patch is coupled adjacent to the bra by a stitching.

5. (Original) The pocket bra of claim 1 wherein the exterior edge of the patch is coupled to the exterior edge of the at least one of the left and right cups by a stitching.
6. (Original) The pocket bra of claim 2 further comprising a second patch forming a second pocket operatively associated with the other of the left and right cups.
7. (Original) The pocket bra of claim 1 wherein the patch lower and exterior edges are aligned with the lower and exterior edges of the at least one of the left and right cups by a stitching, and wherein the stitching is along the lower and exterior edges of the patch.
8. (Original) A pocket bra comprising:

a strap assembly comprising a chest strap; and comprising left and right cups, each cup being an area to receive a breast of a wearer and having inside and outside surfaces, the strap assembly being attached to the cups whereby the strap assembly connects the cups to the wearer, each cup having upper, lower, interior body facing, and opposite exterior edges;

a patch forming a pocket operatively associated with at least one of the left and right cups, the patch having an upper edge, a lower edge, and an exterior edge, the patch having inside and outside surfaces;

the lower edge of the patch coupled to the bra adjacent to a lower edge of the at least one of the left and right cups, and the exterior edge of the patch coupled adjacent to the exterior edge of the at least one of the left and right cups, a pocket opening formed along the upper edge of the patch being unconnected to the at least one of the left and right cups;

the pocket opening capable of repeated receiving and removal of an item when being worn by the wearer; and

wherein the upper edge of the patch crosses over a surface of the cup to form the opening, the upper edge crossing such that the opening faces the interior edge of the at least one of the left and right cup to which it is attached.

9. (Original) The pocket bra of claim 8 wherein the patch is operatively associated with only one of the left and right cups.

10. (Original) The pocket bra of claim 8 further comprising a non-padding item positioned in the pocket.
11. (Original) The pocket bra of claim 8 wherein the lower edge of the patch is coupled adjacent to the bra by a stitching.
12. (Original) The pocket bra of claim 8 wherein the exterior edge of the patch is coupled adjacent to the exterior edge of the at least one of the left and right cups by a stitching.
13. (Original) The pocket bra of claim 9 further comprising a second patch forming a second pocket operatively associated with the other of the left and right cups.
14. (Original) The pocket bra of claim 8 wherein the patch lower and exterior edges are aligned with the lower and exterior edges of the at least one of the left and right cups by a stitching, and wherein the stitching is along the lower and exterior edges of the patch.

Remarks

Applicant thanks the Office for the attention accorded to the present application in the March 21, 2018 Office Action. Claims 1-14 were pending in the subject application.

Applicant respectfully traverses all rejections and asserts that the claims are now in condition for allowance.

Double Patenting Rejections

Claims 1-14 are rejected on the ground of nonstatutory obviousness-type double patenting as being unpatentable over claims 1-17 of U.S. Patent No. 9,295,288; and claims 1-21 of U.S. Patent No. 9,808,036.

Without assenting to the propriety of the rejection, Applicant has herein submitted a terminal disclaimer. As such, Applicant asserts that the double patenting rejection is now moot, and respectfully requests that Examiner remove this ground of rejection.

Conclusion

Applicant again thanks the Office for the attention accorded to the present Application in the March 22, 2018 office action. Applicant asserts that based on the comments presented herein, all of the pending claims are in condition for allowance. Early and favorable action is respectfully requested.

The Examiner is invited to telephone the undersigned, Applicant's attorney of record, to facilitate advancement of the present application.

Respectfully submitted,

/David J. Connaughton, Jr./

David J. Connaughton, Jr.
USPTO Reg. #67275
LAMBERT & ASSOCIATES
92 State Street
Boston, MA 02109
(617) 720-0091

To: info@lambertpatentlaw.com,,
From: PAIR_eOfficeAction@uspto.gov
Cc: PAIR_eOfficeAction@uspto.gov
Subject: Private PAIR Correspondence Notification for Customer Number 32118

Sep 27, 2018 04:02:52 AM

Dear PAIR Customer:

LAMBERT & ASSOCIATES
92 STATE STREET
BOSTON, MA 02109-2004
UNITED STATES

The following USPTO patent application(s) associated with your Customer Number, 32118 , have new outgoing correspondence. This correspondence is now available for viewing in Private PAIR.

The official date of notification of the outgoing correspondence will be indicated on the form PTOL-90 accompanying the correspondence.

Disclaimer:
The list of documents shown below is provided as a courtesy and is not part of the official file wrapper. The content of the images shown in PAIR is the official record.

Application	Document	Mailroom Date	Attorney Docket No.
15679206	ABN	09/27/2018	17-095-SG

To view your correspondence online or update your email addresses, please visit us anytime at https://sportal.uspto.gov/secure/myportal/privatepair.

If you have any questions, please email the Electronic Business Center (EBC) at EBC@uspto.gov with 'e-Office Action' on the subject line or call 1-866-217-9197 during the following hours:

Monday - Friday 6:00 a.m. to 12:00 a.m.

Thank you for prompt attention to this notice,

UNITED STATES PATENT AND TRADEMARK OFFICE

PATENT APPLICATION INFORMATION RETRIEVAL SYSTEM

PTO/SB/06 (09-11)
Approved for use through 1/31/2014. OMB 0651-0032
U.S. Patent and Trademark Office; U.S. DEPARTMENT OF COMMERCE
Under the Paperwork Reduction Act of 1995, no persons are required to respond to a collection of information unless it displays a valid OMB control number.

PATENT APPLICATION FEE DETERMINATION RECORD

Substitute for Form PTO-875

Application or Docket Number	Filing Date	
15/679,206	08/17/2017	☐ To be Mailed

ENTITY: ☐ LARGE ☒ SMALL ☐ MICRO

APPLICATION AS FILED – PART I

FOR	(Column 1) NUMBER FILED	(Column 2) NUMBER EXTRA	RATE ($)	FEE ($)
☐ BASIC FEE (37 CFR 1.16(a), (b), or (c))	N/A	N/A	N/A	
☐ SEARCH FEE (37 CFR 1.16(k), (i), or (m))	N/A	N/A	N/A	
☐ EXAMINATION FEE (37 CFR 1.16(o), (p), or (q))	N/A	N/A	N/A	
TOTAL CLAIMS (37 CFR 1.16(i))	minus 20 =	*	x $ =	
INDEPENDENT CLAIMS (37 CFR 1.16(h))	minus 3 =	*	x $ =	
☐ APPLICATION SIZE FEE (37 CFR 1.16(s))	If the specification and drawings exceed 100 sheets of paper, the application size fee due is $310 ($155 for small entity) for each additional 50 sheets or fraction thereof. See 35 U.S.C. 41(a)(1)(G) and 37 CFR 1.16(s).			
☐ MULTIPLE DEPENDENT CLAIM PRESENT (37 CFR 1.16(j))				
* If the difference in column 1 is less than zero, enter "0" in column 2.			TOTAL	

APPLICATION AS AMENDED – PART II

AMENDMENT

09/15/2018	(Column 1) CLAIMS REMAINING AFTER AMENDMENT		(Column 2) HIGHEST NUMBER PREVIOUSLY PAID FOR	(Column 3) PRESENT EXTRA	RATE ($)	ADDITIONAL FEE ($)
Total (37 CFR 1.16(i))	* 14	Minus	** 20	= 0	x $50 =	0
Independent (37 CFR 1.16(h))	* 2	Minus	***3	= 0	x $230 =	0
☐ Application Size Fee (37 CFR 1.16(s))						
☐ FIRST PRESENTATION OF MULTIPLE DEPENDENT CLAIM (37 CFR 1.16(j))						
					TOTAL ADD'L FEE	0

AMENDMENT

	(Column 1) CLAIMS REMAINING AFTER AMENDMENT		(Column 2) HIGHEST NUMBER PREVIOUSLY PAID FOR	(Column 3) PRESENT EXTRA	RATE ($)	ADDITIONAL FEE ($)
Total (37 CFR 1.16(i))	*	Minus	**	=	x $ =	
Independent (37 CFR 1.16(h))	*	Minus	***	=	x $ =	
☐ Application Size Fee (37 CFR 1.16(s))						
☐ FIRST PRESENTATION OF MULTIPLE DEPENDENT CLAIM (37 CFR 1.16(j))						
					TOTAL ADD'L FEE	

* If the entry in column 1 is less than the entry in column 2, write "0" in column 3.
** If the "Highest Number Previously Paid For" IN THIS SPACE is less than 20, enter "20".
*** If the "Highest Number Previously Paid For" IN THIS SPACE is less than 3, enter "3".
The "Highest Number Previously Paid For" (Total or Independent) is the highest number found in the appropriate box in column 1.

LIE
THUY TA

This collection of information is required by 37 CFR 1.16. The information is required to obtain or retain a benefit by the public which is to file (and by the USPTO to process) an application. Confidentiality is governed by 35 U.S.C. 122 and 37 CFR 1.14. This collection is estimated to take 12 minutes to complete, including gathering, preparing, and submitting the completed application form to the USPTO. Time will vary depending upon the individual case. Any comments on the amount of time you require to complete this form and/or suggestions for reducing this burden, should be sent to the Chief Information Officer, U.S. Patent and Trademark Office, U.S. Department of Commerce, P.O. Box 1450, Alexandria, VA 22313-1450. DO NOT SEND FEES OR COMPLETED FORMS TO THIS ADDRESS. **SEND TO: Commissioner for Patents, P.O. Box 1450, Alexandria, VA 22313-1450.**
If you need assistance in completing the form, call 1-800-PTO-9199 and select option 2.

UNITED STATES PATENT AND TRADEMARK OFFICE

Commissioner for Patents
United States Patent and Trademark Office
P.O. Box 1450
Alexandria, VA 22313-1450
www.uspto.gov

MAILED
OCT 05 2018
OFFICE OF PETITIONS

LAMBERT SHORTELL & CONNAUGHTON
92 STATE STREET
BOSTON MA 02109-2004

Inventor: Sharon Goff	:	
Application No. 15/679,206	:	Decision
Filing Date: August 17, 2017	:	
Attorney Docket No. 17-095-SG	:	

This decision *sua sponte* withdraws the holding of abandonment for the instant application.

The Office issued a non-final Office action setting a three-month shortened statutory period for reply on March 22, 2018.

A reply to the Office action was timely filed with a payment for a three-month extension of time on September 15, 2018.

The Office issued a Notice of Abandonment on September 27, 2018. The notice states the Office has not received a reply to the Office action. However, a reply to the Office action was received on September 15, 2018. Therefore, the application is not abandoned.

In view of the prior discussion, the application is not abandoned and the holding of abandonment is hereby withdrawn.

Technology Center Art Unit 3765 will be informed of this decision, and the technology center will update the Office's PALM database to indicate the application is not abandoned.

Telephone inquiries regarding this communication should be directed to Attorney Advisor Steven Brantley at (571) 272-3203.

Charles Steven Brantley
Attorney Advisor
Office of Petitions

To: info@lambertpatentlaw.com,,
From: PAIR_eOfficeAction@uspto.gov
Cc: PAIR_eOfficeAction@uspto.gov
Subject: Private PAIR Correspondence Notification for Customer Number 32118

Oct 12, 2018 03:48:09 AM

Dear PAIR Customer:

LAMBERT SHORTELL & CONNAUGHTON
92 STATE STREET
BOSTON, MA 02109-2004
UNITED STATES

The following USPTO patent application(s) associated with your Customer Number, 32118 , have new outgoing correspondence. This correspondence is now available for viewing in Private PAIR.

The official date of notification of the outgoing correspondence will be indicated on the form PTOL-90 accompanying the correspondence.

Disclaimer:
The list of documents shown below is provided as a courtesy and is not part of the official file wrapper. The content of the images shown in PAIR is the official record.

Application	Document	Mailroom Date	Attorney Docket No.
15679206	PET.DEC.TC	10/05/2018	17-095-SG

To view your correspondence online or update your email addresses, please visit us anytime at https://sportal.uspto.gov/secure/myportal/privatepair.

If you have any questions, please email the Electronic Business Center (EBC) at EBC@uspto.gov with 'e-Office Action' on the subject line or call 1-866-217-9197 during the following hours:

Monday - Friday 6:00 a.m. to 12:00 a.m.

Thank you for prompt attention to this notice,

UNITED STATES PATENT AND TRADEMARK OFFICE

PATENT APPLICATION INFORMATION RETRIEVAL SYSTEM

UNITED STATES PATENT AND TRADEMARK OFFICE

UNITED STATES DEPARTMENT OF COMMERCE
United States Patent and Trademark Office
Address: COMMISSIONER FOR PATENTS
P.O. Box 1450
Alexandria, Virginia 22313-1450
www.uspto.gov

NOTICE OF ALLOWANCE AND FEE(S) DUE

32118 7590 10/17/2018
LAMBERT SHORTELL & CONNAUGHTON
92 STATE STREET
BOSTON, MA 02109-2004

EXAMINER
HALE, GLORIA M

ART UNIT	PAPER NUMBER
3732	

DATE MAILED: 10/17/2018

APPLICATION NO.	FILING DATE	FIRST NAMED INVENTOR	ATTORNEY DOCKET NO.	CONFIRMATION NO.
15/679,206	08/17/2017	Sharon Goff	17-095-SG	2672

TITLE OF INVENTION: POCKET BRA SYSTEM

APPLN. TYPE	ENTITY STATUS	ISSUE FEE DUE	PUBLICATION FEE DUE	PREV. PAID ISSUE FEE	TOTAL FEE(S) DUE	DATE DUE
nonprovisional	SMALL	$500	$0	$0	$500	01/17/2019

THE APPLICATION IDENTIFIED ABOVE HAS BEEN EXAMINED AND IS ALLOWED FOR ISSUANCE AS A PATENT. PROSECUTION ON THE MERITS IS CLOSED. THIS NOTICE OF ALLOWANCE IS NOT A GRANT OF PATENT RIGHTS. THIS APPLICATION IS SUBJECT TO WITHDRAWAL FROM ISSUE AT THE INITIATIVE OF THE OFFICE OR UPON PETITION BY THE APPLICANT. SEE 37 CFR 1.313 AND MPEP 1308.

THE ISSUE FEE AND PUBLICATION FEE (IF REQUIRED) MUST BE PAID WITHIN THREE MONTHS FROM THE MAILING DATE OF THIS NOTICE OR THIS APPLICATION SHALL BE REGARDED AS ABANDONED. THIS STATUTORY PERIOD CANNOT BE EXTENDED. SEE 35 U.S.C. 151. THE ISSUE FEE DUE INDICATED ABOVE DOES NOT REFLECT A CREDIT FOR ANY PREVIOUSLY PAID ISSUE FEE IN THIS APPLICATION. IF AN ISSUE FEE HAS PREVIOUSLY BEEN PAID IN THIS APPLICATION (AS SHOWN ABOVE), THE RETURN OF PART B OF THIS FORM WILL BE CONSIDERED A REQUEST TO REAPPLY THE PREVIOUSLY PAID ISSUE FEE TOWARD THE ISSUE FEE NOW DUE.

HOW TO REPLY TO THIS NOTICE:

I. Review the ENTITY STATUS shown above. If the ENTITY STATUS is shown as SMALL or MICRO, verify whether entitlement to that entity status still applies.

If the ENTITY STATUS is the same as shown above, pay the TOTAL FEE(S) DUE shown above.

If the ENTITY STATUS is changed from that shown above, on PART B - FEE(S) TRANSMITTAL, complete section number 5 titled "Change in Entity Status (from status indicated above)".

For purposes of this notice, small entity fees are 1/2 the amount of undiscounted fees, and micro entity fees are 1/2 the amount of small entity fees.

II. PART B - FEE(S) TRANSMITTAL, or its equivalent, must be completed and returned to the United States Patent and Trademark Office (USPTO) with your ISSUE FEE and PUBLICATION FEE (if required). If you are charging the fee(s) to your deposit account, section "4b" of Part B - Fee(s) Transmittal should be completed and an extra copy of the form should be submitted. If an equivalent of Part B is filed, a request to reapply a previously paid issue fee must be clearly made, and delays in processing may occur due to the difficulty in recognizing the paper as an equivalent of Part B.

III. All communications regarding this application must give the application number. Please direct all communications prior to issuance to Mail Stop ISSUE FEE unless advised to the contrary.

IMPORTANT REMINDER: Maintenance fees are due in utility patents issuing on applications filed on or after Dec. 12, 1980. It is patentee's responsibility to ensure timely payment of maintenance fees when due. More information is available at www.uspto.gov/PatentMaintenanceFees.

PART B - FEE(S) TRANSMITTAL

Complete and send this form, together with applicable fee(s), to: Mail **Mail Stop ISSUE FEE**
Commissioner for Patents
P.O. Box 1450
Alexandria, Virginia 22313-1450
or Fax (571)-273-2885

INSTRUCTIONS: This form should be used for transmitting the ISSUE FEE and PUBLICATION FEE (if required). Blocks 1 through 5 should be completed where appropriate. All further correspondence including the Patent, advance orders and notification of maintenance fees will be mailed to the current correspondence address as indicated unless corrected below or directed otherwise in Block 1, by (a) specifying a new correspondence address; and/or (b) indicating a separate "FEE ADDRESS" for maintenance fee notifications.

CURRENT CORRESPONDENCE ADDRESS (Note: Use Block 1 for any change of address)

32118 7590 10/17/2018
LAMBERT SHORTELL & CONNAUGHTON
92 STATE STREET
BOSTON, MA 02109-2004

Note: A certificate of mailing can only be used for domestic mailings of the Fee(s) Transmittal. This certificate cannot be used for any other accompanying papers. Each additional paper, such as an assignment or formal drawing, must have its own certificate of mailing or transmission.

Certificate of Mailing or Transmission
I hereby certify that this Fee(s) Transmittal is being deposited with the United States Postal Service with sufficient postage for first class mail in an envelope addressed to the Mail Stop ISSUE FEE address above, or being facsimile transmitted to the USPTO (571) 273-2885, on the date indicated below.

(Depositor's name)
(Signature)
(Date)

APPLICATION NO.	FILING DATE	FIRST NAMED INVENTOR	ATTORNEY DOCKET NO.	CONFIRMATION NO.
15/679,206	08/17/2017	Sharon Goff	17-095-SG	2672

TITLE OF INVENTION: POCKET BRA SYSTEM

APPLN. TYPE	ENTITY STATUS	ISSUE FEE DUE	PUBLICATION FEE DUE	PREV. PAID ISSUE FEE	TOTAL FEE(S) DUE	DATE DUE
nonprovisional	SMALL	$500	$0	$0	$500	01/17/2019

EXAMINER	ART UNIT	CLASS-SUBCLASS
HALE, GLORIA M	3732	450-089000

1. Change of correspondence address or indication of "Fee Address" (37 CFR 1.363).
❑ Change of correspondence address (or Change of Correspondence Address form PTO/SB/122) attached.
❑ "Fee Address" indication (or "Fee Address" Indication form PTO/SB/47; Rev 03-02 or more recent) attached. **Use of a Customer Number is required.**

2. For printing on the patent front page, list
(1) The names of up to 3 registered patent attorneys or agents OR, alternatively,
(2) The name of a single firm (having as a member a registered attorney or agent) and the names of up to 2 registered patent attorneys or agents. If no name is listed, no name will be printed.
1_____
2_____
3_____

3. ASSIGNEE NAME AND RESIDENCE DATA TO BE PRINTED ON THE PATENT (print or type)

PLEASE NOTE: Unless an assignee is identified below, no assignee data will appear on the patent. If an assignee is identified below, the document has been filed for recordation as set forth in 37 CFR 3.11. Completion of this form is NOT a substitute for filing an assignment.

(A) NAME OF ASSIGNEE (B) RESIDENCE: (CITY and STATE OR COUNTRY)

Please check the appropriate assignee category or categories (will not be printed on the patent) : ❑ Individual ❑ Corporation or other private group entity ❑ Government

4a. The following fee(s) are submitted:
❑ Issue Fee
❑ Publication Fee (No small entity discount permitted)
❑ Advance Order - # of Copies _____

4b. Payment of Fee(s): **(Please first reapply any previously paid issue fee shown above)**
❑ A check is enclosed.
❑ Payment by credit card. Form PTO-2038 is attached.
❑ The director is hereby authorized to charge the required fee(s), any deficiency, or credits any overpayment, to Deposit Account Number _____ (enclose an extra copy of this form).

5. **Change in Entity Status** (from status indicated above)
❑ Applicant certifying micro entity status. See 37 CFR 1.29 — NOTE: Absent a valid certification of Micro Entity Status (see forms PTO/SB/15A and 15B), issue fee payment in the micro entity amount will not be accepted at the risk of application abandonment.
❑ Applicant asserting small entity status. See 37 CFR 1.27 — NOTE: If the application was previously under micro entity status, checking this box will be taken to be a notification of loss of entitlement to micro entity status.
❑ Applicant changing to regular undiscounted fee status. — NOTE: Checking this box will be taken to be a notification of loss of entitlement to small or micro entity status, as applicable.

NOTE: This form must be signed in accordance with 37 CFR 1.31 and 1.33. See 37 CFR 1.4 for signature requirements and certifications.

Authorized Signature _____ Date _____

Typed or printed name _____ Registration No. _____

UNITED STATES DEPARTMENT OF COMMERCE
United States Patent and Trademark Office
Address: COMMISSIONER FOR PATENTS
P.O. Box 1450
Alexandria, Virginia 22313-1450
www.uspto.gov

APPLICATION NO.	FILING DATE	FIRST NAMED INVENTOR	ATTORNEY DOCKET NO.	CONFIRMATION NO.
15/679,206	08/17/2017	Sharon Goff	17-095-SG	2672

32118 7590 10/17/2018
LAMBERT SHORTELL & CONNAUGHTON
92 STATE STREET
BOSTON, MA 02109-2004

EXAMINER
HALE, GLORIA M

ART UNIT	PAPER NUMBER
3732	

DATE MAILED: 10/17/2018

Determination of Patent Term Adjustment under 35 U.S.C. 154 (b)
(Applications filed on or after May 29, 2000)

The Office has discontinued providing a Patent Term Adjustment (PTA) calculation with the Notice of Allowance.

Section 1(h)(2) of the AIA Technical Corrections Act amended 35 U.S.C. 154(b)(3)(B)(i) to eliminate the requirement that the Office provide a patent term adjustment determination with the notice of allowance. See Revisions to Patent Term Adjustment, 78 Fed. Reg. 19416, 19417 (Apr. 1, 2013). Therefore, the Office is no longer providing an initial patent term adjustment determination with the notice of allowance. The Office will continue to provide a patent term adjustment determination with the Issue Notification Letter that is mailed to applicant approximately three weeks prior to the issue date of the patent, and will include the patent term adjustment on the patent. Any request for reconsideration of the patent term adjustment determination (or reinstatement of patent term adjustment) should follow the process outlined in 37 CFR 1.705.

Any questions regarding the Patent Term Extension or Adjustment determination should be directed to the Office of Patent Legal Administration at (571)-272-7702. Questions relating to issue and publication fee payments should be directed to the Customer Service Center of the Office of Patent Publication at 1-(888)-786-0101 or (571)-272-4200.

OMB Clearance and PRA Burden Statement for PTOL-85 Part B

The Paperwork Reduction Act (PRA) of 1995 requires Federal agencies to obtain Office of Management and Budget approval before requesting most types of information from the public. When OMB approves an agency request to collect information from the public, OMB (i) provides a valid OMB Control Number and expiration date for the agency to display on the instrument that will be used to collect the information and (ii) requires the agency to inform the public about the OMB Control Number's legal significance in accordance with 5 CFR 1320.5(b).

The information collected by PTOL-85 Part B is required by 37 CFR 1.311. The information is required to obtain or retain a benefit by the public which is to file (and by the USPTO to process) an application. Confidentiality is governed by 35 U.S.C. 122 and 37 CFR 1.14. This collection is estimated to take 12 minutes to complete, including gathering, preparing, and submitting the completed application form to the USPTO. Time will vary depending upon the individual case. Any comments on the amount of time you require to complete this form and/or suggestions for reducing this burden, should be sent to the Chief Information Officer, U.S. Patent and Trademark Office, U.S. Department of Commerce, P.O. Box 1450, Alexandria, Virginia 22313-1450. DO NOT SEND FEES OR COMPLETED FORMS TO THIS ADDRESS. SEND TO: Commissioner for Patents, P.O. Box 1450, Alexandria, Virginia 22313-1450. Under the Paperwork Reduction Act of 1995, no persons are required to respond to a collection of information unless it displays a valid OMB control number.

Privacy Act Statement

The Privacy Act of 1974 (P.L. 93-579) requires that you be given certain information in connection with your submission of the attached form related to a patent application or patent. Accordingly, pursuant to the requirements of the Act, please be advised that: (1) the general authority for the collection of this information is 35 U.S.C. 2(b)(2); (2) furnishing of the information solicited is voluntary; and (3) the principal purpose for which the information is used by the U.S. Patent and Trademark Office is to process and/or examine your submission related to a patent application or patent. If you do not furnish the requested information, the U.S. Patent and Trademark Office may not be able to process and/or examine your submission, which may result in termination of proceedings or abandonment of the application or expiration of the patent.

The information provided by you in this form will be subject to the following routine uses:

1. The information on this form will be treated confidentially to the extent allowed under the Freedom of Information Act (5 U.S.C. 552) and the Privacy Act (5 U.S.C 552a). Records from this system of records may be disclosed to the Department of Justice to determine whether disclosure of these records is required by the Freedom of Information Act.
2. A record from this system of records may be disclosed, as a routine use, in the course of presenting evidence to a court, magistrate, or administrative tribunal, including disclosures to opposing counsel in the course of settlement negotiations.
3. A record in this system of records may be disclosed, as a routine use, to a Member of Congress submitting a request involving an individual, to whom the record pertains, when the individual has requested assistance from the Member with respect to the subject matter of the record.
4. A record in this system of records may be disclosed, as a routine use, to a contractor of the Agency having need for the information in order to perform a contract. Recipients of information shall be required to comply with the requirements of the Privacy Act of 1974, as amended, pursuant to 5 U.S.C. 552a(m).
5. A record related to an International Application filed under the Patent Cooperation Treaty in this system of records may be disclosed, as a routine use, to the International Bureau of the World Intellectual Property Organization, pursuant to the Patent Cooperation Treaty.
6. A record in this system of records may be disclosed, as a routine use, to another federal agency for purposes of National Security review (35 U.S.C. 181) and for review pursuant to the Atomic Energy Act (42 U.S.C. 218(c)).
7. A record from this system of records may be disclosed, as a routine use, to the Administrator, General Services, or his/her designee, during an inspection of records conducted by GSA as part of that agency's responsibility to recommend improvements in records management practices and programs, under authority of 44 U.S.C. 2904 and 2906. Such disclosure shall be made in accordance with the GSA regulations governing inspection of records for this purpose, and any other relevant (i.e., GSA or Commerce) directive. Such disclosure shall not be used to make determinations about individuals.
8. A record from this system of records may be disclosed, as a routine use, to the public after either publication of the application pursuant to 35 U.S.C. 122(b) or issuance of a patent pursuant to 35 U.S.C. 151. Further, a record may be disclosed, subject to the limitations of 37 CFR 1.14, as a routine use, to the public if the record was filed in an application which became abandoned or in which the proceedings were terminated and which application is referenced by either a published application, an application open to public inspection or an issued patent.
9. A record from this system of records may be disclosed, as a routine use, to a Federal, State, or local law enforcement agency, if the USPTO becomes aware of a violation or potential violation of law or regulation.

Notice of Allowability	Application No. 15/679,206	Applicant(s) GOFF, SHARON	
	Examiner GLORIA HALE	Art Unit 3732	AIA (First Inventor to File) Status Yes

-- The MAILING DATE of this communication appears on the cover sheet with the correspondence address--

All claims being allowable, PROSECUTION ON THE MERITS IS (OR REMAINS) CLOSED in this application. If not included herewith (or previously mailed), a Notice of Allowance (PTOL-85) or other appropriate communication will be mailed in due course. **THIS NOTICE OF ALLOWABILITY IS NOT A GRANT OF PATENT RIGHTS.** This application is subject to withdrawal from issue at the initiative of the Office or upon petition by the applicant. See 37 CFR 1.313 and MPEP 1308.

1. ☒ This communication is responsive to *the Terminal Disclaimer of 9-15-18*.
   ☐ A declaration(s)/affidavit(s) under **37 CFR 1.130(b)** was/were filed on_____.
2. ☐ An election was made by the applicant in response to a restriction requirement set forth during the interview on _____; the restriction requirement and election have been incorporated into this action.
3. ☒ The allowed claim(s) is/are *1-14*. As a result of the allowed claim(s), you may be eligible to benefit from the **Patent Prosecution Highway** program at a participating intellectual property office for the corresponding application. For more information, please see http://www.uspto.gov/patents/init_events/pph/index.jsp or send an inquiry to PPHfeedback@uspto.gov.
4. ☐ Acknowledgment is made of a claim for foreign priority under 35 U.S.C. § 119(a)-(d) or (f).

   Certified copies:

   a) ☐ All b) ☐ Some *c) ☐ None of the:
   1. ☐ Certified copies of the priority documents have been received.
   2. ☐ Certified copies of the priority documents have been received in Application No. _____ .
   3. ☐ Copies of the certified copies of the priority documents have been received in this national stage application from the International Bureau (PCT Rule 17.2(a)).

   * Certified copies not received: _____.

Applicant has THREE MONTHS FROM THE "MAILING DATE" of this communication to file a reply complying with the requirements noted below. Failure to timely comply will result in ABANDONMENT of this application.
THIS THREE-MONTH PERIOD IS NOT EXTENDABLE.

5. ☐ CORRECTED DRAWINGS (as "replacement sheets") must be submitted.
   ☐ including changes required by the attached Examiner's Amendment / Comment or in the Office action of Paper No./Mail Date _____.

   Identifying indicia such as the application number (see 37 CFR 1.84(c)) should be written on the drawings in the front (not the back) of each sheet. Replacement sheet(s) should be labeled as such in the header according to 37 CFR 1.121(d).
6. ☐ DEPOSIT OF and/or INFORMATION about the deposit of BIOLOGICAL MATERIAL must be submitted. Note the attached Examiner's comment regarding REQUIREMENT FOR THE DEPOSIT OF BIOLOGICAL MATERIAL.

Attachment(s)

1. ☐ Notice of References Cited (PTO-892)
2. ☐ Information Disclosure Statements (PTO/SB/08), Paper No./Mail Date _____
3. ☐ Examiner's Comment Regarding Requirement for Deposit of Biological Material
4. ☐ Interview Summary (PTO-413), Paper No./Mail Date _____ .
5. ☐ Examiner's Amendment/Comment
6. ☐ Examiner's Statement of Reasons for Allowance
7. ☐ Other _____.

/GLORIA HALE/
Primary Examiner, Art Unit 3732

Issue Classification	Application/Control No.	Applicant(s)/Patent Under Reexamination
	15679206	GOFF, SHARON
	Examiner	**Art Unit**
	GLORIA HALE	3732

CPC						
Symbol					**Type**	**Version**
A41C		3	/	0035	F	2013-01-01
			/			
			/			
			/			
			/			
			/			
			/			
			/			
			/			
			/			
			/			
			/			
			/			
			/			
			/			

CPC Combination Sets								
Symbol					**Type**	**Set**	**Ranking**	**Version**
			/					
			/					

NONE		Total Claims Allowed:	
(Assistant Examiner)	(Date)	14	
/GLORIA HALE/ Primary Examiner.Art Unit 3732	10-13-18	O.G. Print Claim(s)	O.G. Print Figure
(Primary Examiner)	(Date)	1	8

Issue Classification	Application/Control No.	Applicant(s)/Patent Under Reexamination
	15679206	GOFF, SHARON
	Examiner	**Art Unit**
	GLORIA HALE	3732

US ORIGINAL CLASSIFICATION		INTERNATIONAL CLASSIFICATION	
CLASS	SUBCLASS	CLAIMED	NON-CLAIMED
		A 4 1 C 3 / 0035	

CROSS REFERENCE(S)					
CLASS	SUBCLASS (ONE SUBCLASS PER BLOCK)				

NONE		Total Claims Allowed:	
(Assistant Examiner)	(Date)	14	
/GLORIA HALE/ Primary Examiner.Art Unit 3732	10-13-18	O.G. Print Claim(s)	O.G. Print Figure
(Primary Examiner)	(Date)	1	8

Issue Classification	Application/Control No.	Applicant(s)/Patent Under Reexamination
	15679206	GOFF, SHARON
	Examiner	**Art Unit**
	GLORIA HALE	3732

☒ Claims renumbered in the same order as presented by applicant ☐ CPA ☒ T.D. ☐ R.1.47

Final	Original	Final	Original	Final	Original	Final	Original	Final	Original	Final	Original	Final	Original	Final	Original
	1														
	2														
	3														
	4														
	5														
	6														
	7														
	8														
	9														
	10														
	11														
	12														
	13														
	14														

NONE (Assistant Examiner)	(Date)	**Total Claims Allowed:** 14	
/GLORIA HALE/ Primary Examiner.Art Unit 3732 (Primary Examiner)	10-13-18 (Date)	O.G. Print Claim(s) 1	O.G. Print Figure 8

Search Notes	Application/Control No.	Applicant(s)/Patent Under Reexamination
	15679206	GOFF, SHARON
	Examiner	**Art Unit**
	GLORIA HALE	3765

CPC- SEARCHED		
Symbol	**Date**	**Examiner**
A41C3/00,10,12,0035,148	3-12-18	gh
updated	10-13-18	gh

CPC COMBINATION SETS - SEARCHED		
Symbol	**Date**	**Examiner**

US CLASSIFICATION SEARCHED			
Class	**Subclass**	**Date**	**Examiner**
450	89,54-57,36,39		
2	247-251	3-12-18	gh
	updated	10-13-18	gh

* See search history printout included with this form or the SEARCH NOTES box below to determine the scope of the search.

SEARCH NOTES		
Search Notes	**Date**	**Examiner**
inv name srch;ids flag clred	3-12-18	gh

INTERFERENCE SEARCH			
US Class/ CPC Symbol	**US Subclass / CPC Group**	**Date**	**Examiner**
east interference srch		10-14-18	gh

	/GLORIA HALE/ Primary Examiner.Art Unit 3765

UNITED STATES PATENT AND TRADEMARK OFFICE

UNITED STATES DEPARTMENT OF COMMERCE
United States Patent and Trademark Office
Address: COMMISSIONER FOR PATENTS
P.O. Box 1450
Alexandria, Virginia 22313-1450
www.uspto.gov

BIB DATA SHEET

CONFIRMATION NO. 2672

SERIAL NUMBER	FILING or 371(c) DATE	CLASS	GROUP ART UNIT	ATTORNEY DOCKET NO.
15/679,206	08/17/2017 RULE	450	3732	17-095-SG

APPLICANTS

INVENTORS

Sharon Goff, Hilton Head, SC;

**** CONTINUING DATA ***************************

This application is a CON of 15/045,606 02/17/2016 PAT 9808036
which is a CIP of 14/082,777 11/18/2013 PAT 9295288
which is a CIP of 13/066,822 04/26/2011 PAT 8597072

**** FOREIGN APPLICATIONS ***************************

**** IF REQUIRED, FOREIGN FILING LICENSE GRANTED **** ** SMALL ENTITY **
10/16/2017

Foreign Priority claimed	☐ Yes ☑ No	☐ Met after Allowance	STATE OR COUNTRY	SHEETS DRAWINGS	TOTAL CLAIMS	INDEPENDENT CLAIMS
35 USC 119(a-d) conditions met	☐ Yes ☑ No		SC	6	14	2
Verified and Acknowledged	/GLORIA M HALE/ Examiner's Signature	Initials				

ADDRESS

LAMBERT SHORTELL & CONNAUGHTON
92 STATE STREET
BOSTON, MA 02109-2004
UNITED STATES

TITLE

POCKET BRA SYSTEM

FILING FEE RECEIVED		
730	FEES: Authority has been given in Paper No._____ to charge/credit DEPOSIT ACCOUNT No._____ for following:	☐ All Fees ☐ 1.16 Fees (Filing) ☐ 1.17 Fees (Processing Ext. of time) ☐ 1.18 Fees (Issue) ☐ Other _____ ☐ Credit

EAST Search History

EAST Search History (Prior Art)

Ref #	Hits	Search Query	DBs	Default Operator	Plurals	Time Stamp
L1	1	pocket and bra and cup and strap and chest and patch and exterior and edge and upper and crosses and over and surface	US-PGPUB; USPAT	OR	OFF	2018/10/14 17:48

10/14/2018 5:49:28 PM

Index of Claims	Application/Control No.	Applicant(s)/Patent Under Reexamination
	15679206	GOFF, SHARON
	Examiner	**Art Unit**
	GLORIA HALE	3765

✓	Rejected	-	Cancelled	N	Non-Elected	A	Appeal
=	Allowed	÷	Restricted	I	Interference	O	Objected

☒ Claims renumbered in the same order as presented by applicant ☐ CPA ☒ T.D. ☐ R.1.47

CLAIM		DATE								
Final	Original	03/17/2018	10/14/2018							
	1	✓	=							
	2	✓	=							
	3	✓	=							
	4	✓	=							
	5	✓	=							
	6	✓	=							
	7	✓	=							
	8	✓	=							
	9	✓	=							
	10	✓	=							
	11	✓	=							
	12	✓	=							
	13	✓	=							
	14	✓	=							

To: info@lambertpatentlaw.com,,
From: PAIR_eOfficeAction@uspto.gov
Cc: PAIR_eOfficeAction@uspto.gov
Subject: Private PAIR Correspondence Notification for Customer Number 32118

Oct 17, 2018 04:06:31 AM

Dear PAIR Customer:

LAMBERT SHORTELL & CONNAUGHTON
92 STATE STREET
BOSTON, MA 02109-2004
UNITED STATES

The following USPTO patent application(s) associated with your Customer Number, 32118 , have new outgoing correspondence. This correspondence is now available for viewing in Private PAIR.

The official date of notification of the outgoing correspondence will be indicated on the form PTOL-90 accompanying the correspondence.

Disclaimer:
The list of documents shown below is provided as a courtesy and is not part of the official file wrapper. The content of the images shown in PAIR is the official record.

Application	Document	Mailroom Date	Attorney Docket No.
15679206	NOA	10/17/2018	17-095-SG

To view your correspondence online or update your email addresses, please visit us anytime at https://sportal.uspto.gov/secure/myportal/privatepair.

If you have any questions, please email the Electronic Business Center (EBC) at EBC@uspto.gov with 'e-Office Action' on the subject line or call 1-866-217-9197 during the following hours:

Monday - Friday 6:00 a.m. to 12:00 a.m.

Thank you for prompt attention to this notice,

UNITED STATES PATENT AND TRADEMARK OFFICE

PATENT APPLICATION INFORMATION RETRIEVAL SYSTEM

PRINTER RUSH
(PTO ASSISTANCE)

Application: 15679206	Examiner: Hale	GAU: 3732
From: Vermel Wilson	Location: IDC	Creation Date: 10/30/2018

Week Date: 10/22/2018

DOC CODE	DOC DATE	MISCELLANEOUS
[ ] 1449		[ ] Continuing Data
[X] IDS	08/17/2017	[ ] Foreign Priority
[ ] CLM		[ ] Document Legibility
[ ] IIFW/FWCLM		[ ] Fees
[ ] SRFW		[ ] Petition (TC)
[ ] DRW		[ ] Other
[ ] OATH		
[ ] 312		
[ ] SPEC		

[RUSH] Message:

Please initial/line through citations on IDS 8/17/17.

-Thank you

[XRUSH] Response:

Initials: _____

Examiner: PUBS contact - James Leija, (703) 756-1197
NOTE: This form will be included as part of the official USPTO record with the response document coded as XRUSH.
REV: AUG 16

UNITED STATES PATENT AND TRADEMARK OFFICE

UNITED STATES DEPARTMENT OF COMMERCE
United States Patent and Trademark Office
Address: COMMISSIONER FOR PATENTS
P.O. Box 1450
Alexandria, Virginia 22313-1450
www.uspto.gov

APPLICATION NO.	FILING DATE	FIRST NAMED INVENTOR	ATTORNEY DOCKET NO.	CONFIRMATION NO.
15/679,206	08/17/2017	Sharon Goff	17-095-SG	2672

32118 7590 11/13/2018
LAMBERT SHORTELL & CONNAUGHTON
92 STATE STREET
BOSTON, MA 02109-2004

EXAMINER
HALE, GLORIA M

ART UNIT	PAPER NUMBER
3732	

NOTIFICATION DATE	DELIVERY MODE
11/13/2018	ELECTRONIC

Please find below and/or attached an Office communication concerning this application or proceeding.

The time period for reply, if any, is set in the attached communication.

Notice of the Office communication was sent electronically on above-indicated "Notification Date" to the following e-mail address(es):

info@lambertpatentlaw.com

Corrected Notice of Allowability	Application No. 15/679,206	Applicant(s) GOFF, SHARON	
	Examiner GLORIA HALE	Art Unit 3732	AIA (First Inventor to File) Status Yes

-- The MAILING DATE of this communication appears on the cover sheet with the correspondence address--

All claims being allowable, PROSECUTION ON THE MERITS IS (OR REMAINS) CLOSED in this application. If not included herewith (or previously mailed), a Notice of Allowance (PTOL-85) or other appropriate communication will be mailed in due course. **THIS NOTICE OF ALLOWABILITY IS NOT A GRANT OF PATENT RIGHTS.** This application is subject to withdrawal from issue at the initiative of the Office or upon petition by the applicant. See 37 CFR 1.313 and MPEP 1308.

1. ☒ This communication is responsive to *TD of 9-15-18 and IDS of 8-17-17*.
   ☐ A declaration(s)/affidavit(s) under **37 CFR 1.130(b)** was/were filed on_____.
2. ☐ An election was made by the applicant in response to a restriction requirement set forth during the interview on _____; the restriction requirement and election have been incorporated into this action.
3. ☒ The allowed claim(s) is/are *1-14*. As a result of the allowed claim(s), you may be eligible to benefit from the **Patent Prosecution Highway** program at a participating intellectual property office for the corresponding application. For more information, please see http://www.uspto.gov/patents/init_events/pph/index.jsp or send an inquiry to PPHfeedback@uspto.gov.
4. ☐ Acknowledgment is made of a claim for foreign priority under 35 U.S.C. § 119(a)-(d) or (f).

   Certified copies:

   a) ☐ All b) ☐ Some *c) ☐ None of the:
   1. ☐ Certified copies of the priority documents have been received.
   2. ☐ Certified copies of the priority documents have been received in Application No. _____ .
   3. ☐ Copies of the certified copies of the priority documents have been received in this national stage application from the International Bureau (PCT Rule 17.2(a)).

   * Certified copies not received: _____.

Applicant has THREE MONTHS FROM THE "MAILING DATE" of this communication to file a reply complying with the requirements noted below. Failure to timely comply will result in ABANDONMENT of this application.
THIS THREE-MONTH PERIOD IS NOT EXTENDABLE.

5. ☐ CORRECTED DRAWINGS (as "replacement sheets") must be submitted.
   ☐ including changes required by the attached Examiner's Amendment / Comment or in the Office action of Paper No./Mail Date _____.

   Identifying indicia such as the application number (see 37 CFR 1.84(c)) should be written on the drawings in the front (not the back) of each sheet. Replacement sheet(s) should be labeled as such in the header according to 37 CFR 1.121(d).
6. ☐ DEPOSIT OF and/or INFORMATION about the deposit of BIOLOGICAL MATERIAL must be submitted. Note the attached Examiner's comment regarding REQUIREMENT FOR THE DEPOSIT OF BIOLOGICAL MATERIAL.

Attachment(s)

1. ☐ Notice of References Cited (PTO-892)
2. ☒ Information Disclosure Statements (PTO/SB/08), Paper No./Mail Date 8-17-17
3. ☐ Examiner's Comment Regarding Requirement for Deposit of Biological Material
4. ☐ Interview Summary (PTO-413), Paper No./Mail Date _____ .
5. ☐ Examiner's Amendment/Comment
6. ☐ Examiner's Statement of Reasons for Allowance
7. ☐ Other _____.

/GLORIA HALE/
Primary Examiner, Art Unit 3732

Index of Claims	Application/Control No.	Applicant(s)/Patent Under Reexamination
	15679206	GOFF, SHARON
	Examiner	**Art Unit**
	GLORIA HALE	3732

✓	Rejected	-	Cancelled	N	Non-Elected	A	Appeal
=	Allowed	÷	Restricted	I	Interference	O	Objected

☒ Claims renumbered in the same order as presented by applicant ☐ CPA ☒ T.D. ☐ R.1.47

CLAIM		DATE								
Final	Original	03/17/2018	10/14/2018	11/07/2018						
	1	✓	=	=						
	2	✓	=	=						
	3	✓	=	=						
	4	✓	=	=						
	5	✓	=	=						
	6	✓	=	=						
	7	✓	=	=						
	8	✓	=	=						
	9	✓	=	=						
	10	✓	=	=						
	11	✓	=	=						
	12	✓	=	=						
	13	✓	=	=						
	14	✓	=	=						

PRINTER RUSH
(PTO ASSISTANCE)

Application: 15679206	Examiner: Hale	GAU: 3732
From: Vermel Wilson	Location: IDC	Creation Date: 10/30/2018

Week Date: 10/22/2018

DOC CODE	DOC DATE	MISCELLANEOUS
[ ] 1449		[ ] Continuing Data
[X] IDS	08/17/2017	[ ] Foreign Priority
[ ] CLM		[ ] Document Legibility
[ ] IIFW/FWCLM		[ ] Fees
[ ] SRFW		[ ] Petition (TC)
[ ] DRW		[ ] Other
[ ] OATH		
[ ] 312		
[ ] SPEC		

[RUSH] Message:

Please initial/line through citations on IDS 8/17/17.

-Thank you

[XRUSH] Response:

corrected NOA for 8-17-17 IDS

Initials: GH

Examiner: PUBS contact - James Leija, (703) 756-1197
NOTE: This form will be included as part of the official USPTO record with the response document coded as XRUSH.
REV: AUG 16

ALL REFERENCES CONSIDERED EXCEPT WHERE LINED THROUGH. /G.M.H/

Issue Classification	Application/Control No.	Applicant(s)/Patent Under Reexamination
	15679206	GOFF, SHARON
	Examiner	**Art Unit**
	GLORIA HALE	3732

CPC						
Symbol					**Type**	**Version**
A41C	/	3	/	0035	F	2013-01-01

CPC Combination Sets								
Symbol					**Type**	**Set**	**Ranking**	**Version**

NONE (Assistant Examiner)	(Date)	**Total Claims Allowed:** 14	
/GLORIA HALE/ Primary Examiner.Art Unit 3732 (Primary Examiner)	10-13-18 (Date)	O.G. Print Claim(s) 1	O.G. Print Figure 8

Issue Classification	Application/Control No.	Applicant(s)/Patent Under Reexamination
	15679206	GOFF, SHARON
	Examiner	**Art Unit**
	GLORIA HALE	3732

US ORIGINAL CLASSIFICATION		INTERNATIONAL CLASSIFICATION	
CLASS	SUBCLASS	CLAIMED	NON-CLAIMED
		A 4 1 C 3 / 0035	

CROSS REFERENCE(S)					
CLASS	SUBCLASS (ONE SUBCLASS PER BLOCK)				

NONE		Total Claims Allowed:	
(Assistant Examiner)	(Date)	14	
/GLORIA HALE/ Primary Examiner.Art Unit 3732	10-13-18	O.G. Print Claim(s)	O.G. Print Figure
(Primary Examiner)	(Date)	1	8

Issue Classification	Application/Control No.	Applicant(s)/Patent Under Reexamination
	15679206	GOFF, SHARON
	Examiner	**Art Unit**
	GLORIA HALE	3732

☒ **Claims renumbered in the same order as presented by applicant** ☐ **CPA** ☒ **T.D.** ☐ **R.1.47**

Final	Original	Final	Original	Final	Original	Final	Original	Final	Original	Final	Original	Final	Original	Final	Original
	1														
	2														
	3														
	4														
	5														
	6														
	7														
	8														
	9														
	10														
	11														
	12														
	13														
	14														

NONE (Assistant Examiner)	(Date)	**Total Claims Allowed:** 14	
/GLORIA HALE/ Primary Examiner.Art Unit 3732 (Primary Examiner)	10-13-18 (Date)	O.G. Print Claim(s) 1	O.G. Print Figure 8

Doc code: IDS
Doc description: Information Disclosure Statement (IDS) Filed

PTO/SB/08a (01-10)
Approved for use through 07/31/2012. OMB 0651-0031
U.S. Patent and Trademark Office; U.S. DEPARTMENT OF COMMERCE
Under the Paperwork Reduction Act of 1995, no persons are required to respond to a collection of information unless it contains a valid OMB control number.

INFORMATION DISCLOSURE STATEMENT BY APPLICANT

(Not for submission under 37 CFR 1.99)

Application Number	
Filing Date	
First Named Inventor	Sharon Goff
Art Unit	
Examiner Name	
Attorney Docket Number	17-095-SG

U.S.PATENTS Remove

Examiner Initial*	Cite No	Patent Number	Kind Code[1]	Issue Date	Name of Patentee or Applicant of cited Document	Pages,Columns,Lines where Relevant Passages or Relevant Figures Appear
	1	7585200		2009-09-08	Mclaren	
	2	4699144		1987-10-13	Sherwood	
	3	5395280		1995-03-07	Greenberg	
	4	4263678		1981-04-28	Off	
	5	3747545		1973-07-24	Nicolay et al.	
	6	8257140		2012-09-04	Kenny	
	7	7753759		2010-07-13	Pintor et al.	
	8	5496205		1996-03-05	Lee	

ALL REFERENCES CONSIDERED EXCEPT WHERE LINED THROUGH. /G.M.H/

INFORMATION DISCLOSURE STATEMENT BY APPLICANT (Not for submission under 37 CFR 1.99)		
	Application Number	
	Filing Date	
	First Named Inventor	Sharon Goff
	Art Unit	
	Examiner Name	
	Attorney Docket Number	17-095-SG

	9	5799336		1998-09-01	Cooper	
	10	2624881		1953-01-13	Dunson	
	11	8597072		2013-12-03	Lucas	

If you wish to add additional U.S. Patent citation information please click the Add button. Add

U.S.PATENT APPLICATION PUBLICATIONS Remove

Examiner Initial*	Cite No	Publication Number	Kind Code[1]	Publication Date	Name of Patentee or Applicant of cited Document	Pages,Columns,Lines where Relevant Passages or Relevant Figures Appear
	1					

If you wish to add additional U.S. Published Application citation information please click the Add button. Add

FOREIGN PATENT DOCUMENTS Remove

Examiner Initial*	Cite No	Foreign Document Number[3]	Country Code[2] i	Kind Code[4]	Publication Date	Name of Patentee or Applicant of cited Document	Pages,Columns,Lines where Relevant Passages or Relevant Figures Appear	T[5]
	1							

If you wish to add additional Foreign Patent Document citation information please click the Add button Add

NON-PATENT LITERATURE DOCUMENTS Remove

Examiner Initials*	Cite No	Include name of the author (in CAPITAL LETTERS), title of the article (when appropriate), title of the item (book, magazine, journal, serial, symposium, catalog, etc), date, pages(s), volume-issue number(s), publisher, city and/or country where published.	T[5]
	1		

ALL REFERENCES CONSIDERED EXCEPT WHERE LINED THROUGH. /G.M.H/

INFORMATION DISCLOSURE STATEMENT BY APPLICANT (Not for submission under 37 CFR 1.99)		
	Application Number	
	Filing Date	
	First Named Inventor	Sharon Goff
	Art Unit	
	Examiner Name	
	Attorney Docket Number	17-095-SG

If you wish to add additional non-patent literature document citation information please click the Add button Add

EXAMINER SIGNATURE

Examiner Signature	/GLORIA M HALE/	Date Considered	11/07/2018

*EXAMINER: Initial if reference considered, whether or not citation is in conformance with MPEP 609. Draw line through a citation if not in conformance and not considered. Include copy of this form with next communication to applicant.

[1] See Kind Codes of USPTO Patent Documents at www.USPTO.GOV or MPEP 901.04. [2] Enter office that issued the document, by the two-letter code (WIPO Standard ST.3). [3] For Japanese patent documents, the indication of the year of the reign of the Emperor must precede the serial number of the patent document. [4] Kind of document by the appropriate symbols as indicated on the document under WIPO Standard ST.16 if possible. [5] Applicant is to place a check mark here if English language translation is attached.

ALL REFERENCES CONSIDERED EXCEPT WHERE LINED THROUGH. /G.M.H/

INFORMATION DISCLOSURE STATEMENT BY APPLICANT (Not for submission under 37 CFR 1.99)		
	Application Number	
	Filing Date	
	First Named Inventor	Sharon Goff
	Art Unit	
	Examiner Name	
	Attorney Docket Number	17-095-SG

CERTIFICATION STATEMENT

Please see 37 CFR 1.97 and 1.98 to make the appropriate selection(s):

That each item of information contained in the information disclosure statement was first cited in any communication from a foreign patent office in a counterpart foreign application not more than three months prior to the filing of the information disclosure statement. See 37 CFR 1.97(e)(1).

OR

☐ That no item of information contained in the information disclosure statement was cited in a communication from a foreign patent office in a counterpart foreign application, and, to the knowledge of the person signing the certification after making reasonable inquiry, no item of information contained in the information disclosure statement was known to any individual designated in 37 CFR 1.56(c) more than three months prior to the filing of the information disclosure statement. See 37 CFR 1.97(e)(2).

See attached certification statement.

The fee set forth in 37 CFR 1.17 (p) has been submitted herewith.

X A certification statement is not submitted herewith.

SIGNATURE

A signature of the applicant or representative is required in accordance with CFR 1.33, 10.18. Please see CFR 1.4(d) for the form of the signature.

Signature	/David J. Connaughton, Jr./	Date (YYYY-MM-DD)	2016-02-16
Name/Print	David J. Connaughton, Jr.	Registration Number	67275

This collection of information is required by 37 CFR 1.97 and 1.98. The information is required to obtain or retain a benefit by the public which is to file (and by the USPTO to process) an application. Confidentiality is governed by 35 U.S.C. 122 and 37 CFR 1.14. This collection is estimated to take 1 hour to complete, including gathering, preparing and submitting the completed application form to the USPTO. Time will vary depending upon the individual case. Any comments on the amount of time you require to complete this form and/or suggestions for reducing this burden, should be sent to the Chief Information Officer, U.S. Patent and Trademark Office, U.S. Department of Commerce, P.O. Box 1450, Alexandria, VA 22313-1450. DO NOT SEND FEES OR COMPLETED FORMS TO THIS ADDRESS. **SEND TO: Commissioner for Patents, P.O. Box 1450, Alexandria, VA 22313-1450.**

ALL REFERENCES CONSIDERED EXCEPT WHERE LINED THROUGH. /G.M.H/

Privacy Act Statement

The Privacy Act of 1974 (P.L. 93-579) requires that you be given certain information in connection with your submission of the attached form related to a patent application or patent. Accordingly, pursuant to the requirements of the Act, please be advised that: (1) the general authority for the collection of this information is 35 U.S.C. 2(b)(2); (2) furnishing of the information solicited is voluntary; and (3) the principal purpose for which the information is used by the U.S. Patent and Trademark Office is to process and/or examine your submission related to a patent application or patent. If you do not furnish the requested information, the U.S. Patent and Trademark Office may not be able to process and/or examine your submission, which may result in termination of proceedings or abandonment of the application or expiration of the patent.

The information provided by you in this form will be subject to the following routine uses:

1. The information on this form will be treated confidentially to the extent allowed under the Freedom of Information Act (5 U.S.C. 552) and the Privacy Act (5 U.S.C. 552a). Records from this system of records may be disclosed to the Department of Justice to determine whether the Freedom of Information Act requires disclosure of these record s.

2. A record from this system of records may be disclosed, as a routine use, in the course of presenting evidence to a court, magistrate, or administrative tribunal, including disclosures to opposing counsel in the course of settlement negotiations.

3. A record in this system of records may be disclosed, as a routine use, to a Member of Congress submitting a request involving an individual, to whom the record pertains, when the individual has requested assistance from the Member with respect to the subject matter of the record.

4. A record in this system of records may be disclosed, as a routine use, to a contractor of the Agency having need for the information in order to perform a contract. Recipients of information shall be required to comply with the requirements of the Privacy Act of 1974, as amended, pursuant to 5 U.S.C. 552a(m).

5. A record related to an International Application filed under the Patent Cooperation Treaty in this system of records may be disclosed, as a routine use, to the International Bureau of the World Intellectual Property Organization, pursuant to the Patent Cooperation Treaty.

6. A record in this system of records may be disclosed, as a routine use, to another federal agency for purposes of National Security review (35 U.S.C. 181) and for review pursuant to the Atomic Energy Act (42 U.S.C. 218(c)).

7. A record from this system of records may be disclosed, as a routine use, to the Administrator, General Services, or his/her designee, during an inspection of records conducted by GSA as part of that agency's responsibility to recommend improvements in records management practices and programs, under authority of 44 U.S.C. 2904 and 2906. Such disclosure shall be made in accordance with the GSA regulations governing inspection of records for this purpose, and any other relevant (i.e., GSA or Commerce) directive. Such disclosure shall not be used to make determinations about individuals.

8. A record from this system of records may be disclosed, as a routine use, to the public after either publication of the application pursuant to 35 U.S.C. 122(b) or issuance of a patent pursuant to 35 U.S.C. 151. Further, a record may be disclosed, subject to the limitations of 37 CFR 1.14, as a routine use, to the public if the record was filed in an application which became abandoned or in which the proceedings were terminated and which application is referenced by either a published application, an application open to public inspections or an issued patent.

9. A record from this system of records may be disclosed, as a routine use, to a Federal, State, or local law enforcement agency, if the USPTO becomes aware of a violation or potential violation of law or regulation.

ALL REFERENCES CONSIDERED EXCEPT WHERE LINED THROUGH. /G.M.H/

Search Notes	Application/Control No.	Applicant(s)/Patent Under Reexamination
	15679206	GOFF, SHARON
	Examiner	**Art Unit**
	GLORIA HALE	3765

CPC- SEARCHED		
Symbol	**Date**	**Examiner**
A41C3/00,10,12,0035,148	3-12-18	gh
updated	10-13-18	gh

CPC COMBINATION SETS - SEARCHED		
Symbol	**Date**	**Examiner**

US CLASSIFICATION SEARCHED			
Class	**Subclass**	**Date**	**Examiner**
450	89,54-57,36,39		
2	247-251	3-12-18	gh
	updated	10-13-18	gh

* See search history printout included with this form or the SEARCH NOTES box below to determine the scope of the search.

SEARCH NOTES		
Search Notes	**Date**	**Examiner**
inv name srch;ids flag clred	3-12-18	gh

INTERFERENCE SEARCH			
US Class/ CPC Symbol	**US Subclass / CPC Group**	**Date**	**Examiner**
east interference srch		10-14-18	gh

To: info@lambertpatentlaw.com,,
From: PAIR_eOfficeAction@uspto.gov
Cc: PAIR_eOfficeAction@uspto.gov
Subject: Private PAIR Correspondence Notification for Customer Number 32118

Nov 13, 2018 03:38:30 AM

Dear PAIR Customer:

LAMBERT SHORTELL & CONNAUGHTON
92 STATE STREET
BOSTON, MA 02109-2004
UNITED STATES

The following USPTO patent application(s) associated with your Customer Number, 32118 , have new outgoing correspondence. This correspondence is now available for viewing in Private PAIR.

The official date of notification of the outgoing correspondence will be indicated on the form PTOL-90 accompanying the correspondence.

Disclaimer:
The list of documents shown below is provided as a courtesy and is not part of the official file wrapper. The content of the images shown in PAIR is the official record.

Application	Document	Mailroom Date	Attorney Docket No.
15679206	NOA	11/13/2018	17-095-SG
	1449	11/13/2018	17-095-SG

To view your correspondence online or update your email addresses, please visit us anytime at https://sportal.uspto.gov/secure/myportal/privatepair.

If you have any questions, please email the Electronic Business Center (EBC) at EBC@uspto.gov with 'e-Office Action' on the subject line or call 1-866-217-9197 during the following hours:

Monday - Friday 6:00 a.m. to 12:00 a.m.

Thank you for prompt attention to this notice,

UNITED STATES PATENT AND TRADEMARK OFFICE

PATENT APPLICATION INFORMATION RETRIEVAL SYSTEM

PART B - FEE(S) TRANSMITTAL

Complete and send this form, together with applicable fee(s), to: Mail **Mail Stop ISSUE FEE**
Commissioner for Patents
P.O. Box 1450
Alexandria, Virginia 22313-1450
or Fax (571)-273-2885

INSTRUCTIONS: This form should be used for transmitting the ISSUE FEE and PUBLICATION FEE (if required). Blocks 1 through 5 should be completed where appropriate. All further correspondence including the Patent, advance orders and notification of maintenance fees will be mailed to the current correspondence address as indicated unless corrected below or directed otherwise in Block 1, by (a) specifying a new correspondence address; and/or (b) indicating a separate "FEE ADDRESS" for maintenance fee notifications.

CURRENT CORRESPONDENCE ADDRESS (Note: Use Block 1 for any change of address)

LAMBERT SHORTELL & CONNAUGHTON
92 STATE STREET
BOSTON, MA 02109-2004

Note: A certificate of mailing can only be used for domestic mailings of the Fee(s) Transmittal. This certificate cannot be used for any other accompanying papers. Each additional paper, such as an assignment or formal drawing, must have its own certificate of mailing or transmission.

Certificate of Mailing or Transmission

I hereby certify that this Fee(s) Transmittal is being deposited with the United States Postal Service with sufficient postage for first class mail in an envelope addressed to the Mail Stop ISSUE FEE address above, or being facsimile transmitted to the USPTO (571) 273-2885, on the date indicated below.

(Depositor's name)
(Signature)
(Date)

APPLICATION NO.	FILING DATE	FIRST NAMED INVENTOR	ATTORNEY DOCKET NO.	CONFIRMATION NO.
15/679,206	08/17/2017	Sharon Goff	17-095-SG	2672

TITLE OF INVENTION:

APPLN. TYPE	SMALL ENTITY	ISSUE FEE DUE	PUBLICATION FEE DUE	PREV. PAID ISSUE FEE	TOTAL FEE(S) DUE	DATE DUE
nonprovisional	Small	$500	$0	$0	$500	01/17/2019

EXAMINER	ART UNIT	CLASS-SUBCLASS

1. Change of correspondence address or indication of "Fee Address" (37 CFR 1.363).
   - ☐ Change of correspondence address (or Change of Correspondence Address form PTO/SB/122) attached.
   - ☐ "Fee Address" indication (or "Fee Address" Indication form PTO/SB/47; Rev 03-02 or more recent) attached. **Use of a Customer Number is required.**

2. For printing on the patent front page, list
   (1) the names of up to 3 registered patent attorneys or agents OR, alternatively,
   (2) the name of a single firm (having as a member a registered attorney or agent) and the names of up to 2 registered patent attorneys or agents. If no name is listed, no name will be printed.

   1 Lambert Shoretell & Connaughton
   2 Gary E. Lambert
   3 David J. Connaughton, Jr.

3. ASSIGNEE NAME AND RESIDENCE DATA TO BE PRINTED ON THE PATENT (print or type)

PLEASE NOTE: Unless an assignee is identified below, no assignee data will appear on the patent. If an assignee is identified below, the document has been filed for recordation as set forth in 37 CFR 3.11. Completion of this form is NOT a substitute for filing an assignment.

(A) NAME OF ASSIGNEE: Sherrywear LLC

(B) RESIDENCE: (CITY and STATE OR COUNTRY): Hilton Head Island, SC

Please check the appropriate assignee category or categories (will not be printed on the patent) : ☐ Individual ☐ Corporation or other private group entity ☐ Government

4a. The following fee(s) are submitted:
- ☑ Issue Fee
- ☑ Publication Fee (No small entity discount permitted)
- ☐ Advance Order - # of Copies _____

4b. Payment of Fee(s): **(Please first reapply any previously paid issue fee shown above)**
- ☐ A check is enclosed.
- ☑ Payment by credit card. Form PTO-2038 is attached.
- ☐ The Director is hereby authorized to charge the required fee(s), any deficiency, or credit any overpayment, to Deposit Account Number _____ (enclose an extra copy of this form).

5. **Change in Entity Status** (from status indicated above)
- ☐ a. Applicant claims SMALL ENTITY status. See 37 CFR 1.27.
- ☐ b. Applicant is no longer claiming SMALL ENTITY status. See 37 CFR 1.27(g)(2).

NOTE: The Issue Fee and Publication Fee (if required) will not be accepted from anyone other than the applicant; a registered attorney or agent; or the assignee or other party in interest as shown by the records of the United States Patent and Trademark Office.

Authorized Signature /David J. Connaughton, Jr./ Date 1/17/2019

Typed or printed name David J. Connaughton, Jr. Registration No. 67275

This collection of information is required by 37 CFR 1.311. The information is required to obtain or retain a benefit by the public which is to file (and by the USPTO to process) an application. Confidentiality is governed by 35 U.S.C. 122 and 37 CFR 1.14. This collection is estimated to take 12 minutes to complete, including gathering, preparing, and submitting the completed application form to the USPTO. Time will vary depending upon the individual case. Any comments on the amount of time you require to complete this form and/or suggestions for reducing this burden, should be sent to the Chief Information Officer, U.S. Patent and Trademark Office, U.S. Department of Commerce, P.O. Box 1450, Alexandria, Virginia 22313-1450. DO NOT SEND FEES OR COMPLETED FORMS TO THIS ADDRESS. SEND TO: Commissioner for Patents, P.O. Box 1450, Alexandria, Virginia 22313-1450.

Under the Paperwork Reduction Act of 1995, no persons are required to respond to a collection of information unless it displays a valid OMB control number.

Privacy Act Statement

The Privacy Act of 1974 (P.L. 93-579) requires that you be given certain information in connection with your submission of the attached form related to a patent application or patent. Accordingly, pursuant to the requirements of the Act, please be advised that: (1) the general authority for the collection of this information is 35 U.S.C. 2(b)(2); (2) furnishing of the information solicited is voluntary; and (3) the principal purpose for which the information is used by the U.S. Patent and Trademark Office is to process and/or examine your submission related to a patent application or patent. If you do not furnish the requested information, the U.S. Patent and Trademark Office may not be able to process and/or examine your submission, which may result in termination of proceedings or abandonment of the application or expiration of the patent.

The information provided by you in this form will be subject to the following routine uses:

1. The information on this form will be treated confidentially to the extent allowed under the Freedom of Information Act (5 U.S.C. 552) and the Privacy Act (5 U.S.C 552a). Records from this system of records may be disclosed to the Department of Justice to determine whether disclosure of these records is required by the Freedom of Information Act.
2. A record from this system of records may be disclosed, as a routine use, in the course of presenting evidence to a court, magistrate, or administrative tribunal, including disclosures to opposing counsel in the course of settlement negotiations.
3. A record in this system of records may be disclosed, as a routine use, to a Member of Congress submitting a request involving an individual, to whom the record pertains, when the individual has requested assistance from the Member with respect to the subject matter of the record.
4. A record in this system of records may be disclosed, as a routine use, to a contractor of the Agency having need for the information in order to perform a contract. Recipients of information shall be required to comply with the requirements of the Privacy Act of 1974, as amended, pursuant to 5 U.S.C. 552a(m).
5. A record related to an International Application filed under the Patent Cooperation Treaty in this system of records may be disclosed, as a routine use, to the International Bureau of the World Intellectual Property Organization, pursuant to the Patent Cooperation Treaty.
6. A record in this system of records may be disclosed, as a routine use, to another federal agency for purposes of National Security review (35 U.S.C. 181) and for review pursuant to the Atomic Energy Act (42 U.S.C. 218(c)).
7. A record from this system of records may be disclosed, as a routine use, to the Administrator, General Services, or his/her designee, during an inspection of records conducted by GSA as part of that agency's responsibility to recommend improvements in records management practices and programs, under authority of 44 U.S.C. 2904 and 2906. Such disclosure shall be made in accordance with the GSA regulations governing inspection of records for this purpose, and any other relevant (i.e., GSA or Commerce) directive. Such disclosure shall not be used to make determinations about individuals.
8. A record from this system of records may be disclosed, as a routine use, to the public after either publication of the application pursuant to 35 U.S.C. 122(b) or issuance of a patent pursuant to 35 U.S.C. 151. Further, a record may be disclosed, subject to the limitations of 37 CFR 1.14, as a routine use, to the public if the record was filed in an application which became abandoned or in which the proceedings were terminated and which application is referenced by either a published application, an application open to public inspection or an issued patent.
9. A record from this system of records may be disclosed, as a routine use, to a Federal, State, or local law enforcement agency, if the USPTO becomes aware of a violation or potential violation of law or regulation.

Electronic Patent Application Fee Transmittal

Application Number:	15679206
Filing Date:	17-Aug-2017
Title of Invention:	POCKET BRA SYSTEM
First Named Inventor/Applicant Name:	Sharon Goff
Filer:	Gary Ervery Lambert
Attorney Docket Number:	17-095-SG

Filed as Small Entity

Filing Fees for Utility under 35 USC 111(a)

Description	Fee Code	Quantity	Amount	Sub-Total in USD($)
Basic Filing:				
Pages:				
Claims:				
Miscellaneous-Filing:				
Petition:				
Patent-Appeals-and-Interference:				
Post-Allowance-and-Post-Issuance:				
UTILITY APPL ISSUE FEE	2501	1	500	500

Description	Fee Code	Quantity	Amount	Sub-Total in USD($)
Extension-of-Time:				
Miscellaneous:				
			Total in USD ($)	**500**

Electronic Acknowledgement Receipt

EFS ID:	34885763
Application Number:	15679206
International Application Number:	
Confirmation Number:	2672
Title of Invention:	POCKET BRA SYSTEM
First Named Inventor/Applicant Name:	Sharon Goff
Customer Number:	32118
Filer:	Gary Ervery Lambert
Filer Authorized By:	
Attorney Docket Number:	17-095-SG
Receipt Date:	17-JAN-2019
Filing Date:	17-AUG-2017
Time Stamp:	14:13:53
Application Type:	Utility under 35 USC 111(a)

Payment information:

Submitted with Payment	yes
Payment Type	CARD
Payment was successfully received in RAM	$500
RAM confirmation Number	011819INTEFSW14142500
Deposit Account	
Authorized User	

The Director of the USPTO is hereby authorized to charge indicated fees and credit any overpayment as follows:

File Listing:

Document Number	Document Description	File Name	File Size(Bytes)/ Message Digest	Multi Part /.zip	Pages (if appl.)
1	Issue Fee Payment (PTO-85B)	Issue_Fee_Transmittal_Form-17-095-SG.pdf	74723 f45e0ee956d9c7dab997bfee34da438351f55639	no	2
Warnings:					
Information:					
2	Fee Worksheet (SB06)	fee-info.pdf	29992 ce0ab07bfbf412f897c6c19863a2fe9f591381cf	no	2
Warnings:					
Information:					
		Total Files Size (in bytes):	104715		

This Acknowledgement Receipt evidences receipt on the noted date by the USPTO of the indicated documents, characterized by the applicant, and including page counts, where applicable. It serves as evidence of receipt similar to a Post Card, as described in MPEP 503.

New Applications Under 35 U.S.C. 111
If a new application is being filed and the application includes the necessary components for a filing date (see 37 CFR 1.53(b)-(d) and MPEP 506), a Filing Receipt (37 CFR 1.54) will be issued in due course and the date shown on this Acknowledgement Receipt will establish the filing date of the application.
National Stage of an International Application under 35 U.S.C. 371
If a timely submission to enter the national stage of an international application is compliant with the conditions of 35 U.S.C. 371 and other applicable requirements a Form PCT/DO/EO/903 indicating acceptance of the application as a national stage submission under 35 U.S.C. 371 will be issued in addition to the Filing Receipt, in due course.
New International Application Filed with the USPTO as a Receiving Office
If a new international application is being filed and the international application includes the necessary components for an international filing date (see PCT Article 11 and MPEP 1810), a Notification of the International Application Number and of the International Filing Date (Form PCT/RO/105) will be issued in due course, subject to prescriptions concerning national security, and the date shown on this Acknowledgement Receipt will establish the international filing date of the application.

UNITED STATES PATENT AND TRADEMARK OFFICE

UNITED STATES DEPARTMENT OF COMMERCE
United States Patent and Trademark Office
Address: COMMISSIONER FOR PATENTS
P.O. Box 1450
Alexandria, Virginia 22313-1450
www.uspto.gov

APPLICATION NO.	ISSUE DATE	PATENT NO.	ATTORNEY DOCKET NO.	CONFIRMATION NO.
15/679,206	03/05/2019	10219550	17-095-SG	2672

32118 7590 02/13/2019
LAMBERT SHORTELL & CONNAUGHTON
92 STATE STREET
BOSTON, MA 02109-2004

ISSUE NOTIFICATION

The projected patent number and issue date are specified above.

Determination of Patent Term Adjustment under 35 U.S.C. 154 (b)
(application filed on or after May 29, 2000)

The Patent Term Adjustment is 0 day(s). Any patent to issue from the above-identified application will include an indication of the adjustment on the front page.

If a Continued Prosecution Application (CPA) was filed in the above-identified application, the filing date that determines Patent Term Adjustment is the filing date of the most recent CPA.

Applicant will be able to obtain more detailed information by accessing the Patent Application Information Retrieval (PAIR) WEB site (http://pair.uspto.gov).

Any questions regarding the Patent Term Extension or Adjustment determination should be directed to the Office of Patent Legal Administration at (571)-272-7702. Questions relating to issue and publication fee payments should be directed to the Application Assistance Unit (AAU) of the Office of Data Management (ODM) at (571)-272-4200.

APPLICANT(s) (Please see PAIR WEB site http://pair.uspto.gov for additional applicants):

Sharon Goff, Hilton Head, SC;

The United States represents the largest, most dynamic marketplace in the world and is an unparalleled location for business investment, innovation, and commercialization of new technologies. The USA offers tremendous resources and advantages for those who invest and manufacture goods here. Through SelectUSA, our nation works to encourage and facilitate business investment. To learn more about why the USA is the best country in the world to develop technology, manufacture products, and grow your business, visit SelectUSA.gov.

IR103 (Rev. 10/09)

To: info@lambertpatentlaw.com,,
From: PAIR_eOfficeAction@uspto.gov
Cc: PAIR_eOfficeAction@uspto.gov
Subject: Private PAIR Correspondence Notification for Customer Number 32118

Feb 14, 2019 04:32:17 AM

Dear PAIR Customer:

LAMBERT SHORTELL & CONNAUGHTON
92 STATE STREET
BOSTON, MA 02109-2004
UNITED STATES

The following USPTO patent application(s) associated with your Customer Number, 32118 , have new outgoing correspondence. This correspondence is now available for viewing in Private PAIR.

The official date of notification of the outgoing correspondence will be indicated on the form PTOL-90 accompanying the correspondence.

Disclaimer:
The list of documents shown below is provided as a courtesy and is not part of the official file wrapper. The content of the images shown in PAIR is the official record.

Application	Document	Mailroom Date	Attorney Docket No.
15679206	ISSUE.NTF	02/13/2019	17-095-SG

To view your correspondence online or update your email addresses, please visit us anytime at https://sportal.uspto.gov/secure/myportal/privatepair.

If you have any questions, please email the Electronic Business Center (EBC) at EBC@uspto.gov with 'e-Office Action' on the subject line or call 1-866-217-9197 during the following hours:

Monday - Friday 6:00 a.m. to 12:00 a.m.

Thank you for prompt attention to this notice,

UNITED STATES PATENT AND TRADEMARK OFFICE

PATENT APPLICATION INFORMATION RETRIEVAL SYSTEM

Doc Code: PA..
Document Description: Power of Attorney

PTO/AIA/82A (07-13)
Approved for use through 11/30/2014. OMB 0651-0051
U.S. Patent and Trademark Office; U.S. DEPARTMENT OF COMMERCE
Under the Paperwork Reduction Act of 1995, no persons are required to respond to a collection of information unless it displays a valid OMB control number.

TRANSMITTAL FOR POWER OF ATTORNEY TO ONE OR MORE REGISTERED PRACTITIONERS

NOTE: This form is to be submitted with the Power of Attorney by Applicant form (PTO/AIA/82B) to identify the application to which the Power of Attorney is directed, in accordance with 37 CFR 1.5, unless the application number and filing date are identified in the Power of Attorney by Applicant form. If neither form PTO/AIA/82A nor form PTO/AIA82B identifies the application to which the Power of Attorney is directed, the Power of Attorney will not be recognized in the application.

Application Number	15/679,206
Filing Date	
First Named Inventor	Sharon Goff
Title	POCKET BRA SYSTEM
Art Unit	
Examiner Name	
Attorney Docket Number	104925

SIGNATURE of Applicant or Patent Practitioner

Signature	/Dale J. Ream/	Date (Optional)	
Name	Dale J. Ream	Registration Number	45798
Title (if Applicant is a juristic entity)			
Applicant Name (if Applicant is a juristic entity)			

NOTE: This form must be signed in accordance with 37 CFR 1.33. See 37 CFR 1.4(d) for signature requirements and certifications. If more than one applicant, use multiple forms.

☐ *Total of _____ forms are submitted.

This collection of information is required by 37 CFR 1.131, 1.32, and 1.33. The information is required to obtain or retain a benefit by the public which is to file (and by the USPTO to process) an application. Confidentiality is governed by 35 U.S.C. 122 and 37 CFR 1.11 and 1.14. This collection is estimated to take 3 minutes to complete, including gathering, preparing, and submitting the completed application form to the USPTO. Time will vary depending upon the individual case. Any comments on the amount of time you require to complete this form and/or suggestions for reducing this burden, should be sent to the Chief Information Officer, U.S. Patent and Trademark Office, U.S. Department of Commerce, P.O. Box 1450, Alexandria, VA 22313-1450. DO NOT SEND FEES OR COMPLETED FORMS TO THIS ADDRESS. **SEND TO: Commissioner for Patents, P.O. Box 1450, Alexandria, VA 22313-1450.**

If you need assistance in completing the form, call 1-800-PTO-9199 and select option 2.

Doc Code: PA..
Document Description: Power of Attorney

PTO/AIA/82B (07-13)
Approved for use through 11/30/2014. OMB 0651-0031
U.S. Patent and Trademark Office; U.S. DEPARTMENT OF COMMERCE
Under the Paperwork Reduction Act of 1995, no persons are required to respond to a collection of information unless it displays a valid OMB control number

POWER OF ATTORNEY BY APPLICANT

I hereby revoke all previous powers of attorney given in the application identified in either the attached transmittal letter or the boxes below.

Application Number	Filing Date

(Note: The boxes above may be left blank if information is provided on form PTO/AIA/82A.)

☑ I hereby appoint the Patent Practitioner(s) associated with the following Customer Number as my/our attorney(s) or agent(s), and to transact all business in the United States Patent and Trademark Office connected therewith for the application referenced in the attached transmittal letter (form PTO/AIA/82A) or identified above: 24230

OR

☐ I hereby appoint Practitioner(s) named in the attached list (form PTO/AIA/82C) as my/our attorney(s) or agent(s), and to transact all business in the United States Patent and Trademark Office connected therewith for the patent application referenced in the attached transmittal letter (form PTO/AIA/82A) or identified above. (Note: Complete form PTO/AIA/82C.)

Please recognize or change the correspondence address for the application identified in the attached transmittal letter or the boxes above to:

☑ The address associated with the above-mentioned Customer Number

OR

☐ The address associated with Customer Number:

OR

Firm or Individual Name					
Address					
City		State		Zip	
Country					
Telephone		Email			

I am the Applicant (if the Applicant is a juristic entity, list the Applicant name in the box):

Sherrywear LLC

☑ Inventor or Joint Inventor (title not required below)

☐ Legal Representative of a Deceased or Legally Incapacitated Inventor (title not required below)

☐ Assignee or Person to Whom the Inventor is Under an Obligation to Assign (provide signer's title if applicant is a juristic entity)

☐ Person Who Otherwise Shows Sufficient Proprietary Interest (e.g., a petition under 37 CFR 1.46(b)(2) was granted in the application or is concurrently being filed with this document) (provide signer's title if applicant is a juristic entity)

SIGNATURE of Applicant for Patent

The undersigned (whose title is supplied below) is authorized to act on behalf of the applicant (e.g., where the applicant is a juristic entity).

Signature	Sharon Goff	Date (Optional)	3/3/2020
Name	Sharon Goff		
Title			

NOTE: Signature - This form must be signed by the applicant in accordance with 37 CFR 1.33. See 37 CFR 1.4 for signature requirements and certifications. If more than one applicant, use multiple forms.

☐ Total of forms are submitted.

This collection of information is required by 37 CFR 1.131, 1.32, and 1.33. The information is required to obtain or retain a benefit by the public which is to file (and by the USPTO to process) an application. Confidentiality is governed by 35 U.S.C. 122 and 37 CFR 1.11 and 1.14. This collection is estimated to take 3 minutes to complete, including gathering, preparing, and submitting the completed application form to the USPTO. Time will vary depending upon the individual case. Any comments on the amount of time you require to complete this form and/or suggestions for reducing this burden, should be sent to the Chief Information Officer, U.S. Patent and Trademark Office, U.S. Department of Commerce, P.O. Box 1450, Alexandria, VA 22313-1450. DO NOT SEND FEES OR COMPLETED FORMS TO THIS ADDRESS. **SEND TO: Commissioner for Patents, P.O. Box 1450, Alexandria, VA 22313-1450.**

If you need assistance in completing the form, call 1-800-PTO-9199 and select option 2.

Scanned with CamScanner

Electronic Acknowledgement Receipt

EFS ID:	39578824
Application Number:	15679206
International Application Number:	
Confirmation Number:	2672
Title of Invention:	POCKET BRA SYSTEM
First Named Inventor/Applicant Name:	Sharon Goff
Customer Number:	32118
Filer:	Dale Ream/Michelle Randol
Filer Authorized By:	Dale Ream
Attorney Docket Number:	17-095-SG
Receipt Date:	29-MAY-2020
Filing Date:	17-AUG-2017
Time Stamp:	16:18:15
Application Type:	Utility under 35 USC 111(a)

Payment information:

Submitted with Payment	no

File Listing:

Document Number	Document Description	File Name	File Size(Bytes)/ Message Digest	Multi Part /.zip	Pages (if appl.)
1	Power of Attorney	POA_20200529143026.pdf	542108 69ce5423d6cfee25bd0bbe8dc19cf0017456ad5b	no	2

Warnings:

Information:	
Total Files Size (in bytes):	542108

This Acknowledgement Receipt evidences receipt on the noted date by the USPTO of the indicated documents, characterized by the applicant, and including page counts, where applicable. It serves as evidence of receipt similar to a Post Card, as described in MPEP 503.

New Applications Under 35 U.S.C. 111
If a new application is being filed and the application includes the necessary components for a filing date (see 37 CFR 1.53(b)-(d) and MPEP 506), a Filing Receipt (37 CFR 1.54) will be issued in due course and the date shown on this Acknowledgement Receipt will establish the filing date of the application.
National Stage of an International Application under 35 U.S.C. 371
If a timely submission to enter the national stage of an international application is compliant with the conditions of 35 U.S.C. 371 and other applicable requirements a Form PCT/DO/EO/903 indicating acceptance of the application as a national stage submission under 35 U.S.C. 371 will be issued in addition to the Filing Receipt, in due course.
New International Application Filed with the USPTO as a Receiving Office
If a new international application is being filed and the international application includes the necessary components for an international filing date (see PCT Article 11 and MPEP 1810), a Notification of the International Application Number and of the International Filing Date (Form PCT/RO/105) will be issued in due course, subject to prescriptions concerning national security, and the date shown on this Acknowledgement Receipt will establish the international filing date of the application.

UNITED STATES PATENT AND TRADEMARK OFFICE

UNITED STATES DEPARTMENT OF COMMERCE
United States Patent and Trademark Office
Address: COMMISSIONER FOR PATENTS
P.O. Box 1450
Alexandria, Virginia 22313-1450
www.uspto.gov

APPLICATION NUMBER	FILING OR 371(C) DATE	FIRST NAMED APPLICANT	ATTY. DOCKET NO./TITLE
15/679,206	08/17/2017	Sharon Goff	17-095-SG

CONFIRMATION NO. 2672

IMPROPER CPOA LETTER

32118
LAMBERT SHORTELL & CONNAUGHTON
92 STATE STREET
BOSTON, MA 02109-2004

OC000000117413594

Date Mailed: 06/05/2020

NOTICE REGARDING POWER OF ATTORNEY

This is in response to the power of attorney filed 05/29/2020. The power of attorney in this application is not accepted for the reason(s) listed below:

- The power of attorney is from an assignee and the statement required by 37 CFR 3.73(c) has not been received.

/zretta/

Office of Data Management, Application Assistance Unit (571) 272-4000, or (571) 272-4200, or 1-888-786-0101

24230
Ream Law Firm, L.L.C.
210 W. TECUMSEH STREET
OTTAWA, KS 66067
UNITED STATES

To: info@lambertpatentlaw.com,,
From: PAIR_eOfficeAction@uspto.gov
Cc: PAIR_eOfficeAction@uspto.gov
Subject: Private PAIR Correspondence Notification for Customer Number 32118

Jun 05, 2020 03:44:17 AM

Dear PAIR Customer:

LAMBERT SHORTELL & CONNAUGHTON
92 STATE STREET
BOSTON, MA 02109-2004
UNITED STATES

The following USPTO patent application(s) associated with your Customer Number, 32118 , have new outgoing correspondence. This correspondence is now available for viewing in Private PAIR.

The official date of notification of the outgoing correspondence will be indicated on the form PTOL-90 accompanying the correspondence.

Disclaimer:
The list of documents shown below is provided as a courtesy and is not part of the official file wrapper. The content of the images shown in PAIR is the official record.

Application	Document	Mailroom Date	Attorney Docket No.
15679206	N572	06/05/2020	17-095-SG

To view your correspondence online or update your email addresses, please visit us anytime at https://sportal.uspto.gov/secure/myportal/privatepair.

If you have any questions, please email the Electronic Business Center (EBC) at EBC@uspto.gov with 'e-Office Action' on the subject line or call 1-866-217-9197 during the following hours:

Monday - Friday 6:00 a.m. to 12:00 a.m.

Thank you for prompt attention to this notice,

UNITED STATES PATENT AND TRADEMARK OFFICE

PATENT APPLICATION INFORMATION RETRIEVAL SYSTEM

PATENT ASSIGNMENT COVER SHEET

Electronic Version v1.1
Stylesheet Version v1.2

EPAS ID: PAT7268532

SUBMISSION TYPE:	NEW ASSIGNMENT
NATURE OF CONVEYANCE:	CHANGE OF ADDRESS

CONVEYING PARTY DATA

Name	Execution Date
SHERRYWEAR, LLC	04/07/2022

RECEIVING PARTY DATA

Name:	SHERRYWEAR, LLC
Street Address:	1786 CYPRESS LANE
City:	VERO BEACH
State/Country:	FLORIDA
Postal Code:	32963

PROPERTY NUMBERS Total: 9

Property Type	Number
Patent Number:	9289016
Patent Number:	9295288
Patent Number:	9723878
Patent Number:	9808036
Patent Number:	10219550
Patent Number:	10219551
Patent Number:	10244800
Patent Number:	10869510
Patent Number:	11051561

CORRESPONDENCE DATA

Fax Number:

Correspondence will be sent to the e-mail address first; if that is unsuccessful, it will be sent using a fax number, if provided; if that is unsuccessful, it will be sent via US Mail.

Email: info@lambertpatentlaw.com
Correspondent Name: DAVID CONNAUGHTON
Address Line 1: 100 FRANKLIN STREET
Address Line 2: SUITE 903
Address Line 4: BOSTON, MASSACHUSETTS 02110

NAME OF SUBMITTER:	DAVID CONNAUGHTON
SIGNATURE:	/DAVID CONNAUGHTON/

DATE SIGNED:	04/07/2022
	This document serves as an Oath/Declaration (37 CFR 1.63).

Total Attachments: 9
source=Change of address 9289016#page1.tif
source=Change of address 9295288#page1.tif
source=Change of address 9723878#page1.tif
source=Change of address 9808036#page1.tif
source=Change of address 10219550#page1.tif
source=Change of address 10219551#page1.tif
source=Change of address 10244800#page1.tif
source=Change of address 10869510#page1.tif
source=Change of address 11051561#page1.tif

UNITED STATES PATENT AND TRADEMARK OFFICE

Patent No.:	9289016
Assignee:	SHERRYWEAR, LLC
Invention title:	Pocket bra system
Reel/frame:	036929/0101

Lambert Shortell & Connaughton
100 Franklin Street, Suite 903
Boston, MA 02110

Commissioner for Patents
P.O. Box 1450
Alexandria, VA 22313-1450

CHANGE OF ADDRESS

This is a request that the address of the Assignee of the above-identified patent be updated. The Assignee is no longer located at 24 Wood Duck Court, Hilton Head Island, SC 29928. The Assignee is now located at 1786 Cypress Lane, Vero Beach, FL 32963. Accordingly, the assignment of the above-identified patent should be updated to reflect the change of address. The Assignment Division is invited to contact the undersigned, Applicant's attorney of record, to facilitate advancement of the present request.

Respectfully submitted,

/David J. Connaughton, Jr./
David J. Connaughton, Jr.
USPTO Reg. #67275
100 Franklin Street, Suite 903
Boston, MA 02110
(617) 720-0091

UNITED STATES PATENT AND TRADEMARK OFFICE

Patent No.:	9295288
Assignee:	SHERRYWEAR, LLC
Invention title:	Pocket bra system
Reel/frame:	036929/0101

Lambert Shortell & Connaughton
100 Franklin Street, Suite 903
Boston, MA 02110

Commissioner for Patents
P.O. Box 1450
Alexandria, VA 22313-1450

CHANGE OF ADDRESS

This is a request that the address of the Assignee of the above-identified patent be updated. The Assignee is no longer located at 24 Wood Duck Court, Hilton Head Island, SC 29928. The Assignee is now located at 1786 Cypress Lane, Vero Beach, FL 32963. Accordingly, the assignment of the above-identified patent should be updated to reflect the change of address. The Assignment Division is invited to contact the undersigned, Applicant's attorney of record, to facilitate advancement of the present request.

Respectfully submitted,

/David J. Connaughton, Jr./
David J. Connaughton, Jr.
USPTO Reg. #67275
100 Franklin Street, Suite 903
Boston, MA 02110
(617) 720-0091

UNITED STATES PATENT AND TRADEMARK OFFICE

Patent No.:	9723878
Assignee:	SHERRYWEAR, LLC
Invention title:	Pocket bra system
Reel/frame:	037763/0204

Lambert Shortell & Connaughton
100 Franklin Street, Suite 903
Boston, MA 02110

Commissioner for Patents
P.O. Box 1450
Alexandria, VA 22313-1450

CHANGE OF ADDRESS

This is a request that the address of the Assignee of the above-identified patent be updated. The Assignee is no longer located at 24 Wood Duck Court, Hilton Head Island, SC 29928. The Assignee is now located at 1786 Cypress Lane, Vero Beach, FL 32963. Accordingly, the assignment of the above-identified patent should be updated to reflect the change of address. The Assignment Division is invited to contact the undersigned, Applicant's attorney of record, to facilitate advancement of the present request.

Respectfully submitted,

/David J. Connaughton, Jr./
David J. Connaughton, Jr.
USPTO Reg. #67275
100 Franklin Street, Suite 903
Boston, MA 02110
(617) 720-0091

UNITED STATES PATENT AND TRADEMARK OFFICE

Patent No.:	9808036
Assignee:	SHERRYWEAR, LLC
Invention title:	Pocket bra system
Reel/frame:	037763/0204

Lambert Shortell & Connaughton
100 Franklin Street, Suite 903
Boston, MA 02110

Commissioner for Patents
P.O. Box 1450
Alexandria, VA 22313-1450

CHANGE OF ADDRESS

This is a request that the address of the Assignee of the above-identified patent be updated. The Assignee is no longer located at 24 Wood Duck Court, Hilton Head Island, SC 29928. The Assignee is now located at 1786 Cypress Lane, Vero Beach, FL 32963. Accordingly, the assignment of the above-identified patent should be updated to reflect the change of address. The Assignment Division is invited to contact the undersigned, Applicant's attorney of record, to facilitate advancement of the present request.

Respectfully submitted,

/David J. Connaughton, Jr./
David J. Connaughton, Jr.
USPTO Reg. #67275
100 Franklin Street, Suite 903
Boston, MA 02110
(617) 720-0091

UNITED STATES PATENT AND TRADEMARK OFFICE

Patent No.:	10219550
Assignee:	SHERRYWEAR, LLC
Invention title:	Pocket bra system
Reel/frame:	044338/0675

Lambert Shortell & Connaughton
100 Franklin Street, Suite 903
Boston, MA 02110

Commissioner for Patents
P.O. Box 1450
Alexandria, VA 22313-1450

CHANGE OF ADDRESS

This is a request that the address of the Assignee of the above-identified patent be updated. The Assignee is no longer located at 24 Wood Duck Court, Hilton Head Island, SC 29928. The Assignee is now located at 1786 Cypress Lane, Vero Beach, FL 32963. Accordingly, the assignment of the above-identified patent should be updated to reflect the change of address. The Assignment Division is invited to contact the undersigned, Applicant's attorney of record, to facilitate advancement of the present request.

Respectfully submitted,

/David J. Connaughton, Jr./
David J. Connaughton, Jr.
USPTO Reg. #67275
100 Franklin Street, Suite 903
Boston, MA 02110
(617) 720-0091

UNITED STATES PATENT AND TRADEMARK OFFICE

Patent No.:	10219551
Assignee:	SHERRYWEAR, LLC
Invention title:	Bra pocket system
Reel/frame:	044338/0675

Lambert Shortell & Connaughton
100 Franklin Street, Suite 903
Boston, MA 02110

Commissioner for Patents
P.O. Box 1450
Alexandria, VA 22313-1450

CHANGE OF ADDRESS

This is a request that the address of the Assignee of the above-identified patent be updated. The Assignee is no longer located at 24 Wood Duck Court, Hilton Head Island, SC 29928. The Assignee is now located at 1786 Cypress Lane, Vero Beach, FL 32963. Accordingly, the assignment of the above-identified patent should be updated to reflect the change of address. The Assignment Division is invited to contact the undersigned, Applicant's attorney of record, to facilitate advancement of the present request.

Respectfully submitted,

/David J. Connaughton, Jr./
David J. Connaughton, Jr.
USPTO Reg. #67275
100 Franklin Street, Suite 903
Boston, MA 02110
(617) 720-0091

UNITED STATES PATENT AND TRADEMARK OFFICE

Patent No.:	10244800
Assignee:	SHERRYWEAR, LLC
Invention title:	Bra pocket system
Reel/frame:	052634/0266

Lambert Shortell & Connaughton
100 Franklin Street, Suite 903
Boston, MA 02110

Commissioner for Patents
P.O. Box 1450
Alexandria, VA 22313-1450

CHANGE OF ADDRESS

This is a request that the address of the Assignee of the above-identified patent be updated. The Assignee is no longer located at 24 Wood Duck Court, Hilton Head Island, SC 29928. The Assignee is now located at 1786 Cypress Lane, Vero Beach, FL 32963. Accordingly, the assignment of the above-identified patent should be updated to reflect the change of address. The Assignment Division is invited to contact the undersigned, Applicant's attorney of record, to facilitate advancement of the present request.

Respectfully submitted,

/David J. Connaughton, Jr./
David J. Connaughton, Jr.
USPTO Reg. #67275
100 Franklin Street, Suite 903
Boston, MA 02110
(617) 720-0091

UNITED STATES PATENT AND TRADEMARK OFFICE

Patent No.:	10869510
Assignee:	SHERRYWEAR, LLC
Invention title:	Bra pocket system
Reel/frame:	048162/0864

Lambert Shortell & Connaughton
100 Franklin Street, Suite 903
Boston, MA 02110

Commissioner for Patents
P.O. Box 1450
Alexandria, VA 22313-1450

CHANGE OF ADDRESS

This is a request that the address of the Assignee of the above-identified patent be updated. The Assignee is no longer located at 24 Wood Duck Court, Hilton Head Island, SC 29928. The Assignee is now located at 1786 Cypress Lane, Vero Beach, FL 32963. Accordingly, the assignment of the above-identified patent should be updated to reflect the change of address. The Assignment Division is invited to contact the undersigned, Applicant's attorney of record, to facilitate advancement of the present request.

Respectfully submitted,

/David J. Connaughton, Jr./
David J. Connaughton, Jr.
USPTO Reg. #67275
100 Franklin Street, Suite 903
Boston, MA 02110
(617) 720-0091

UNITED STATES PATENT AND TRADEMARK OFFICE

Patent No.:	11051561
Assignee:	SHERRYWEAR, LLC
Invention title:	Pocket bra system
Reel/frame:	048162/0864

Lambert Shortell & Connaughton
100 Franklin Street, Suite 903
Boston, MA 02110

Commissioner for Patents
P.O. Box 1450
Alexandria, VA 22313-1450

CHANGE OF ADDRESS

This is a request that the address of the Assignee of the above-identified patent be updated. The Assignee is no longer located at 24 Wood Duck Court, Hilton Head Island, SC 29928. The Assignee is now located at 1786 Cypress Lane, Vero Beach, FL 32963. Accordingly, the assignment of the above-identified patent should be updated to reflect the change of address. The Assignment Division is invited to contact the undersigned, Applicant's attorney of record, to facilitate advancement of the present request.

Respectfully submitted,

/David J. Connaughton, Jr./
David J. Connaughton, Jr.
USPTO Reg. #67275
100 Franklin Street, Suite 903
Boston, MA 02110
(617) 720-0091

DocuSign Envelope ID: DDCAD40B-EF9A-4E58-89C3-C2807AEDBF08

PTO/AIA/82A (07-13)
Approved for use through 01/31/2018. OMB 0651-0035
U.S. Patent and Trademark Office; U.S. DEPARTMENT OF COMMERCE
Under the Paperwork Reduction Act of 1995, no persons are required to respond to a collection of information unless it displays a valid OMB control number.

TRANSMITTAL FOR POWER OF ATTORNEY TO ONE OR MORE REGISTERED PRACTITIONERS

NOTE: This form is to be submitted with the Power of Attorney by Applicant form (PTO/AIA/82B) to identify the application to which the Power of Attorney is directed, in accordance with 37 CFR 1.5, unless the application number and filing date are identified in the Power of Attorney by Applicant form. If neither form PTO/AIA/82A nor form PTO/AIA82B identifies the application to which the Power of Attorney is directed, the Power of Attorney will not be recognized in the application.

Application Number	15/679,206
Filing Date	08-17-2017
First Named Inventor	Sharon Goff
Title	POCKET BRA SYSTEM
Art Unit	3732
Examiner Name	GLORIA M HALE
Attorney Docket Number	17-095-SG

SIGNATURE of Applicant or Patent Practitioner

Signature	/KATHERINE A RUBINO/	Date (Optional)	
Name	Katherine A Rubino	Registration Number	76990
Title (if Applicant is a juristic entity)			
Applicant Name (if Applicant is a juristic entity)			

NOTE: This form must be signed in accordance with 37 CFR 1.33. See 37 CFR 1.4(d) for signature requirements and certifications. If more than one applicant, use multiple forms.

☐ *Total of _____ forms are submitted.

This collection of information is required by 37 CFR 1.131, 1.32, and 1.33. The information is required to obtain or retain a benefit by the public which is to file (and by the USPTO to process) an application. Confidentiality is governed by 35 U.S.C. 122 and 37 CFR 1.11 and 1.14. This collection is estimated to take 3 minutes to complete, including gathering, preparing, and submitting the completed application form to the USPTO. Time will vary depending upon the individual case. Any comments on the amount of time you require to complete this form and/or suggestions for reducing this burden, should be sent to the Chief Information Officer, U.S. Patent and Trademark Office, U.S. Department of Commerce, P.O. Box 1450, Alexandria, VA 22313-1450. DO NOT SEND FEES OR COMPLETED FORMS TO THIS ADDRESS. **SEND TO: Commissioner for Patents, P.O. Box 1450, Alexandria, VA 22313-1450.**

If you need assistance in completing the form, call 1-800-PTO-9199 and select option 2.

PTO/AIA/82B (07-13)
Approved for use through 01/31/2018. OMB 0651-0035
U.S. Patent and Trademark Office; U.S. DEPARTMENT OF COMMERCE
Under the Paperwork Reduction Act of 1995, no persons are required to respond to a collection of information unless it displays a valid OMB control number

POWER OF ATTORNEY BY APPLICANT

I hereby revoke all previous powers of attorney given in the application identified in either the attached transmittal letter or the boxes below.

Application Number	Filing Date
15/679,206	08-17-2017

(Note: The boxes above may be left blank if information is provided on form PTO/AIA/82A.)

☑ I hereby appoint the Patent Practitioner(s) associated with the following Customer Number as my/our attorney(s) or agent(s), and to transact all business in the United States Patent and Trademark Office connected therewith for the application referenced in the attached transmittal letter (form PTO/AIA/82A) or identified above: 145340

OR

☐ I hereby appoint Practitioner(s) named in the attached list (form PTO/AIA/82C) as my/our attorney(s) or agent(s), and to transact all business in the United States Patent and Trademark Office connected therewith for the patent application referenced in the attached transmittal letter (form PTO/AIA/82A) or identified above. (Note: Complete form PTO/AIA/82C.)

Please recognize or change the correspondence address for the application identified in the attached transmittal letter or the boxes above to:

☑ The address associated with the above-mentioned Customer Number

OR

☐ The address associated with Customer Number:

OR

☐ Firm or Individual Name					
Address					
City		State		Zip	
Country					
Telephone		Email			

I am the Applicant (if the Applicant is a juristic entity, list the Applicant name in the box):

SherryWear, LLC

☐ Inventor or Joint Inventor (title not required below)

☐ Legal Representative of a Deceased or Legally Incapacitated Inventor (title not required below)

☐ Assignee or Person to Whom the Inventor is Under an Obligation to Assign (provide signer's title if applicant is a juristic entity)

☐ Person Who Otherwise Shows Sufficient Proprietary Interest (e.g., a petition under 37 CFR 1.46(b)(2) was granted in the application or is concurrently being filed with this document) (provide signer's title if applicant is a juristic entity)

SIGNATURE of Applicant for Patent

The undersigned (whose title is supplied below) is authorized to act on behalf of the applicant (e.g., where the applicant is a juristic entity).

Signature	DocuSigned by: Sharon Goff DD39FABABF0A492...	Date (Optional)	
Name	Sharon Goff		
Title	Manager		

NOTE: Signature - This form must be signed by the applicant in accordance with 37 CFR 1.33. See 37 CFR 1.4 for signature requirements and certifications. If more than one applicant, use multiple forms.

☐ Total of forms are submitted.

This collection of information is required by 37 CFR 1.131, 1.32, and 1.33. The information is required to obtain or retain a benefit by the public which is to file (and by the USPTO to process) an application. Confidentiality is governed by 35 U.S.C. 122 and 37 CFR 1.11 and 1.14. This collection is estimated to take 3 minutes to complete, including gathering, preparing, and submitting the completed application form to the USPTO. Time will vary depending upon the individual case. Any comments on the amount of time you require to complete this form and/or suggestions for reducing this burden, should be sent to the Chief Information Officer, U.S. Patent and Trademark Office, U.S. Department of Commerce, P.O. Box 1450, Alexandria, VA 22313-1450. DO NOT SEND FEES OR COMPLETED FORMS TO THIS ADDRESS. **SEND TO: Commissioner for Patents, P.O. Box 1450, Alexandria, VA 22313-1450.**

If you need assistance in completing the form, call 1-800-PTO-9199 and select option 2.

DocuSign Envelope ID: DDCAD40B-EF9A-4E58-89C3-C2807AEDBF08

PTO/AIA/82C (07-13)
Approved for use through 01/31/2018. OMB 0651-0035
U.S. Patent and Trademark Office; U.S. DEPARTMENT OF COMMERCE
Under the Paperwork Reduction Act of 1995, no persons are required to respond to a collection of information unless it displays a valid OMB control number

POWER OF ATTORNEY BY APPLICANT

No more than ten (10) patent practitioners total may be appointed as set forth below by name and registration number. This page need not be submitted if appointing the Patent Practitioner(s) associated with a Customer Number (see form PTO/AIA/82B):

Name	Registration Number

Privacy Act Statement

The **Privacy Act of 1974 (P.L. 93-579)** requires that you be given certain information in connection with your submission of the attached form related to a patent application or patent. Accordingly, pursuant to the requirements of the Act, please be advised that: (1) the general authority for the collection of this information is 35 U.S.C. 2(b)(2); (2) furnishing of the information solicited is voluntary; and (3) the principal purpose for which the information is used by the U.S. Patent and Trademark Office is to process and/or examine your submission related to a patent application or patent. If you do not furnish the requested information, the U.S. Patent and Trademark Office may not be able to process and/or examine your submission, which may result in termination of proceedings or abandonment of the application or expiration of the patent.

The information provided by you in this form will be subject to the following routine uses:

1. The information on this form will be treated confidentially to the extent allowed under the Freedom of Information Act (5 U.S.C. 552) and the Privacy Act (5 U.S.C. 552a). Records from this system of records may be disclosed to the Department of Justice to determine whether the Freedom of Information Act requires disclosure of these records.
2. A record from this system of records may be disclosed, as a routine use, in the course of presenting evidence to a court, magistrate, or administrative tribunal, including disclosures to opposing counsel in the course of settlement negotiations.
3. A record in this system of records may be disclosed, as a routine use, to a Member of Congress submitting a request involving an individual, to whom the record pertains, when the individual has requested assistance from the Member with respect to the subject matter of the record.
4. A record in this system of records may be disclosed, as a routine use, to a contractor of the Agency having need for the information in order to perform a contract. Recipients of information shall be required to comply with the requirements of the Privacy Act of 1974, as amended, pursuant to 5 U.S.C. 552a(m).
5. A record related to an International Application filed under the Patent Cooperation Treaty in this system of records may be disclosed, as a routine use, to the International Bureau of the World Intellectual Property Organization, pursuant to the Patent Cooperation Treaty.
6. A record in this system of records may be disclosed, as a routine use, to another federal agency for purposes of National Security review (35 U.S.C. 181) and for review pursuant to the Atomic Energy Act (42 U.S.C. 218(c)).
7. A record from this system of records may be disclosed, as a routine use, to the Administrator, General Services, or his/her designee, during an inspection of records conducted by GSA as part of that agency's responsibility to recommend improvements in records management practices and programs, under authority of 44 U.S.C. 2904 and 2906. Such disclosure shall be made in accordance with the GSA regulations governing inspection of records for this purpose, and any other relevant (i.e., GSA or Commerce) directive. Such disclosure shall not be used to make determinations about individuals.
8. A record from this system of records may be disclosed, as a routine use, to the public after either publication of the application pursuant to 35 U.S.C. 122(b) or issuance of a patent pursuant to 35 U.S.C. 151. Further, a record may be disclosed, subject to the limitations of 37 CFR 1.14, as a routine use, to the public if the record was filed in an application which became abandoned or in which the proceedings were terminated and which application is referenced by either a published application, an application open to public inspections or an issued patent.
9. A record from this system of records may be disclosed, as a routine use, to a Federal, State, or local law enforcement agency, if the USPTO becomes aware of a violation or potential violation of law or regulation.

Electronic Acknowledgement Receipt

EFS ID:	46064531
Application Number:	15679206
International Application Number:	
Confirmation Number:	2672
Title of Invention:	POCKET BRA SYSTEM
First Named Inventor/Applicant Name:	Sharon Goff
Customer Number:	32118
Filer:	Keegan M. Caldwell/Rachel Riley
Filer Authorized By:	Keegan M. Caldwell
Attorney Docket Number:	17-095-SG
Receipt Date:	28-JUN-2022
Filing Date:	17-AUG-2017
Time Stamp:	14:32:07
Application Type:	Utility under 35 USC 111(a)

Payment information:

Submitted with Payment	no

File Listing:

Document Number	Document Description	File Name	File Size(Bytes)/ Message Digest	Multi Part /.zip	Pages (if appl.)
1	Power of Attorney	15679206_POA.pdf	245303 1b52b533c6563c57ec959d1b04158a33eda5bb7f	no	4

Warnings:

Information:	
Total Files Size (in bytes):	245303

This Acknowledgement Receipt evidences receipt on the noted date by the USPTO of the indicated documents, characterized by the applicant, and including page counts, where applicable. It serves as evidence of receipt similar to a Post Card, as described in MPEP 503.

New Applications Under 35 U.S.C. 111
If a new application is being filed and the application includes the necessary components for a filing date (see 37 CFR 1.53(b)-(d) and MPEP 506), a Filing Receipt (37 CFR 1.54) will be issued in due course and the date shown on this Acknowledgement Receipt will establish the filing date of the application.
National Stage of an International Application under 35 U.S.C. 371
If a timely submission to enter the national stage of an international application is compliant with the conditions of 35 U.S.C. 371 and other applicable requirements a Form PCT/DO/EO/903 indicating acceptance of the application as a national stage submission under 35 U.S.C. 371 will be issued in addition to the Filing Receipt, in due course.
New International Application Filed with the USPTO as a Receiving Office
If a new international application is being filed and the international application includes the necessary components for an international filing date (see PCT Article 11 and MPEP 1810), a Notification of the International Application Number and of the International Filing Date (Form PCT/RO/105) will be issued in due course, subject to prescriptions concerning national security, and the date shown on this Acknowledgement Receipt will establish the international filing date of the application.

UNITED STATES PATENT AND TRADEMARK OFFICE

UNITED STATES DEPARTMENT OF COMMERCE
United States Patent and Trademark Office
Address: COMMISSIONER FOR PATENTS
P.O. Box 1450
Alexandria, Virginia 22313-1450
www.uspto.gov

APPLICATION NUMBER	FILING OR 371(C) DATE	FIRST NAMED APPLICANT	ATTY. DOCKET NO./TITLE
15/679,206	08/17/2017	Sharon Goff	17-095-SG

CONFIRMATION NO. 2672

IMPROPER CPOA LETTER

32118
LAMBERT SHORTELL & CONNAUGHTON
100 Franklin Street
Suite 903
BOSTON, MA 02110

OC000000135119656

Date Mailed: 07/14/2022

NOTICE REGARDING POWER OF ATTORNEY

This is in response to the power of attorney filed 06/28/2022. The power of attorney in this application is not accepted for the reason(s) listed below:

- The power of attorney is from an assignee and the statement required by 37 CFR 3.73(c) has not been received.

/agizaw/

Office of Data Management, Application Assistance Unit (571) 272-4000, or (571) 272-4200, or 1-888-786-0101

145340
Caldwell Intellectual Property Law
200 Clarendon Street
59th Floor
Boston, MA 02116
UNITED STATES

To: info@lambertpatentlaw.com,,
From: PAIR_eOfficeAction@uspto.gov
Cc: PAIR_eOfficeAction@uspto.gov
Subject: Private PAIR Correspondence Notification for Customer Number 32118

Jul 14, 2022 05:18:45 AM

Dear PAIR Customer:

LAMBERT SHORTELL & CONNAUGHTON
100 Franklin Street
Suite 903
BOSTON, MA 02110
UNITED STATES

The following USPTO patent application(s) associated with your Customer Number, 32118 , have new outgoing correspondence. This correspondence is now available for viewing in Private PAIR.

The official date of notification of the outgoing correspondence will be indicated on the form PTOL-90 accompanying the correspondence.

Disclaimer:
The list of documents shown below is provided as a courtesy and is not part of the official file wrapper. The content of the images shown in PAIR is the official record.

Application	Document	Mailroom Date	Attorney Docket No.
15679206	N572	07/14/2022	17-095-SG

To view your correspondence online or update your email addresses, please visit us anytime at https://sportal.uspto.gov/secure/myportal/privatepair.

If you have any questions, please email the Electronic Business Center (EBC) at EBC@uspto.gov with 'e-Office Action' on the subject line or call 1-866-217-9197 during the following hours:

Monday - Friday 6:00 a.m. to 12:00 a.m.

Thank you for prompt attention to this notice,

UNITED STATES PATENT AND TRADEMARK OFFICE

PATENT APPLICATION INFORMATION RETRIEVAL SYSTEM

DocuSign Envelope ID: DDCAD40B-EF9A-4E58-89C3-C2807AEDBF08

PTO/AIA/82A (07-13)
Approved for use through 01/31/2018. OMB 0651-0035
U.S. Patent and Trademark Office; U.S. DEPARTMENT OF COMMERCE
Under the Paperwork Reduction Act of 1995, no persons are required to respond to a collection of information unless it displays a valid OMB control number.

TRANSMITTAL FOR POWER OF ATTORNEY TO ONE OR MORE REGISTERED PRACTITIONERS

NOTE: This form is to be submitted with the Power of Attorney by Applicant form (PTO/AIA/82B) to identify the application to which the Power of Attorney is directed, in accordance with 37 CFR 1.5, unless the application number and filing date are identified in the Power of Attorney by Applicant form. If neither form PTO/AIA/82A nor form PTO/AIA82B identifies the application to which the Power of Attorney is directed, the Power of Attorney will not be recognized in the application.

Application Number	15/045,606
Filing Date	02-17-2016
First Named Inventor	Sharon Goff
Title	POCKET BRA SYSTEM
Art Unit	3765
Examiner Name	GLORIA M HALE
Attorney Docket Number	16-029-SG

SIGNATURE of Applicant or Patent Practitioner

Signature	/KATHERINE A RUBINO/	Date (Optional)	
Name	Katherine A Rubino	Registration Number	76990
Title (if Applicant is a juristic entity)			
Applicant Name (if Applicant is a juristic entity)			

NOTE: This form must be signed in accordance with 37 CFR 1.33. See 37 CFR 1.4(d) for signature requirements and certifications. If more than one applicant, use multiple forms.

☐ *Total of _____ forms are submitted.

This collection of information is required by 37 CFR 1.131, 1.32, and 1.33. The information is required to obtain or retain a benefit by the public which is to file (and by the USPTO to process) an application. Confidentiality is governed by 35 U.S.C. 122 and 37 CFR 1.11 and 1.14. This collection is estimated to take 3 minutes to complete, including gathering, preparing, and submitting the completed application form to the USPTO. Time will vary depending upon the individual case. Any comments on the amount of time you require to complete this form and/or suggestions for reducing this burden, should be sent to the Chief Information Officer, U.S. Patent and Trademark Office, U.S. Department of Commerce, P.O. Box 1450, Alexandria, VA 22313-1450. DO NOT SEND FEES OR COMPLETED FORMS TO THIS ADDRESS. **SEND TO: Commissioner for Patents, P.O. Box 1450, Alexandria, VA 22313-1450.**

If you need assistance in completing the form, call 1-800-PTO-9199 and select option 2.

PTO/AIA/82B (07-13)
Approved for use through 01/31/2018. OMB 0651-0035
U.S. Patent and Trademark Office; U.S. DEPARTMENT OF COMMERCE
Under the Paperwork Reduction Act of 1995, no persons are required to respond to a collection of information unless it displays a valid OMB control number

POWER OF ATTORNEY BY APPLICANT

I hereby revoke all previous powers of attorney given in the application identified in either the attached transmittal letter or the boxes below.

Application Number	Filing Date
15/045,606	02-17-2016

(Note: The boxes above may be left blank if information is provided on form PTO/AIA/82A.)

☑ I hereby appoint the Patent Practitioner(s) associated with the following Customer Number as my/our attorney(s) or agent(s), and to transact all business in the United States Patent and Trademark Office connected therewith for the application referenced in the attached transmittal letter (form PTO/AIA/82A) or identified above: 145340

OR

☐ I hereby appoint Practitioner(s) named in the attached list (form PTO/AIA/82C) as my/our attorney(s) or agent(s), and to transact all business in the United States Patent and Trademark Office connected therewith for the patent application referenced in the attached transmittal letter (form PTO/AIA/82A) or identified above. (Note: Complete form PTO/AIA/82C.)

Please recognize or change the correspondence address for the application identified in the attached transmittal letter or the boxes above to:

☑ The address associated with the above-mentioned Customer Number

OR

☐ The address associated with Customer Number:

OR

☐ Firm or Individual Name					
Address					
City		State		Zip	
Country					
Telephone		Email			

I am the Applicant (if the Applicant is a juristic entity, list the Applicant name in the box):

SherryWear, LLC

☐ Inventor or Joint Inventor (title not required below)

☐ Legal Representative of a Deceased or Legally Incapacitated Inventor (title not required below)

☐ Assignee or Person to Whom the Inventor is Under an Obligation to Assign (provide signer's title if applicant is a juristic entity)

☐ Person Who Otherwise Shows Sufficient Proprietary Interest (e.g., a petition under 37 CFR 1.46(b)(2) was granted in the application or is concurrently being filed with this document) (provide signer's title if applicant is a juristic entity)

SIGNATURE of Applicant for Patent

The undersigned (whose title is supplied below) is authorized to act on behalf of the applicant (e.g., where the applicant is a juristic entity).

Signature	Sharon Goff	Date (Optional)	
Name	Sharon Goff DD39FABABF0A492...		
Title	Manager		

NOTE: Signature - This form must be signed by the applicant in accordance with 37 CFR 1.33. See 37 CFR 1.4 for signature requirements and certifications. If more than one applicant, use multiple forms.

☐ Total of forms are submitted.

This collection of information is required by 37 CFR 1.131, 1.32, and 1.33. The information is required to obtain or retain a benefit by the public which is to file (and by the USPTO to process) an application. Confidentiality is governed by 35 U.S.C. 122 and 37 CFR 1.11 and 1.14. This collection is estimated to take 3 minutes to complete, including gathering, preparing, and submitting the completed application form to the USPTO. Time will vary depending upon the individual case. Any comments on the amount of time you require to complete this form and/or suggestions for reducing this burden, should be sent to the Chief Information Officer, U.S. Patent and Trademark Office, U.S. Department of Commerce, P.O. Box 1450, Alexandria, VA 22313-1450. DO NOT SEND FEES OR COMPLETED FORMS TO THIS ADDRESS. **SEND TO: Commissioner for Patents, P.O. Box 1450, Alexandria, VA 22313-1450.**

If you need assistance in completing the form, call 1-800-PTO-9199 and select option 2.

DocuSign Envelope ID: DDCAD40B-EF9A-4E58-89C3-C2807AEDBF08

PTO/AIA/82C (07-13)
Approved for use through 01/31/2018. OMB 0651-0035
U.S. Patent and Trademark Office; U.S. DEPARTMENT OF COMMERCE
Under the Paperwork Reduction Act of 1995, no persons are required to respond to a collection of information unless it displays a valid OMB control number

POWER OF ATTORNEY BY APPLICANT

No more than ten (10) patent practitioners total may be appointed as set forth below by name and registration number. This page need not be submitted if appointing the Patent Practitioner(s) associated with a Customer Number (see form PTO/AIA/82B):

Name	Registration Number

Privacy Act Statement

The **Privacy Act of 1974 (P.L. 93-579)** requires that you be given certain information in connection with your submission of the attached form related to a patent application or patent. Accordingly, pursuant to the requirements of the Act, please be advised that: (1) the general authority for the collection of this information is 35 U.S.C. 2(b)(2); (2) furnishing of the information solicited is voluntary; and (3) the principal purpose for which the information is used by the U.S. Patent and Trademark Office is to process and/or examine your submission related to a patent application or patent. If you do not furnish the requested information, the U.S. Patent and Trademark Office may not be able to process and/or examine your submission, which may result in termination of proceedings or abandonment of the application or expiration of the patent.

The information provided by you in this form will be subject to the following routine uses:

1. The information on this form will be treated confidentially to the extent allowed under the Freedom of Information Act (5 U.S.C. 552) and the Privacy Act (5 U.S.C. 552a). Records from this system of records may be disclosed to the Department of Justice to determine whether the Freedom of Information Act requires disclosure of these records.
2. A record from this system of records may be disclosed, as a routine use, in the course of presenting evidence to a court, magistrate, or administrative tribunal, including disclosures to opposing counsel in the course of settlement negotiations.
3. A record in this system of records may be disclosed, as a routine use, to a Member of Congress submitting a request involving an individual, to whom the record pertains, when the individual has requested assistance from the Member with respect to the subject matter of the record.
4. A record in this system of records may be disclosed, as a routine use, to a contractor of the Agency having need for the information in order to perform a contract. Recipients of information shall be required to comply with the requirements of the Privacy Act of 1974, as amended, pursuant to 5 U.S.C. 552a(m).
5. A record related to an International Application filed under the Patent Cooperation Treaty in this system of records may be disclosed, as a routine use, to the International Bureau of the World Intellectual Property Organization, pursuant to the Patent Cooperation Treaty.
6. A record in this system of records may be disclosed, as a routine use, to another federal agency for purposes of National Security review (35 U.S.C. 181) and for review pursuant to the Atomic Energy Act (42 U.S.C. 218(c)).
7. A record from this system of records may be disclosed, as a routine use, to the Administrator, General Services, or his/her designee, during an inspection of records conducted by GSA as part of that agency's responsibility to recommend improvements in records management practices and programs, under authority of 44 U.S.C. 2904 and 2906. Such disclosure shall be made in accordance with the GSA regulations governing inspection of records for this purpose, and any other relevant (i.e., GSA or Commerce) directive. Such disclosure shall not be used to make determinations about individuals.
8. A record from this system of records may be disclosed, as a routine use, to the public after either publication of the application pursuant to 35 U.S.C. 122(b) or issuance of a patent pursuant to 35 U.S.C. 151. Further, a record may be disclosed, subject to the limitations of 37 CFR 1.14, as a routine use, to the public if the record was filed in an application which became abandoned or in which the proceedings were terminated and which application is referenced by either a published application, an application open to public inspections or an issued patent.
9. A record from this system of records may be disclosed, as a routine use, to a Federal, State, or local law enforcement agency, if the USPTO becomes aware of a violation or potential violation of law or regulation.

PTO/AIA/96 (08-12)
Approved for use through 01/31/2013. OMB 0651-0031
U.S. Patent and Trademark Office; U.S. DEPARTMENT OF COMMERCE
Under the Paperwork Reduction Act of 1995, no persons are required to respond to a collection of information unless it displays a valid OMB control number.

STATEMENT UNDER 37 CFR 3.73(c)

Applicant/Patent Owner: Sharon Goff / SherryWear, LLC

Application No./Patent No.: 15/045,606 / 9,808,036 Filed/Issue Date: 02/17/2016 / 11/07/2017

Titled: POCKET BRA SYSTEM

SherryWear, LLC, a LLC

(Name of Assignee) (Type of Assignee, e.g., corporation, partnership, university, government agency, etc.)

states that, for the patent application/patent identified above, it is (choose **one** of options 1, 2, 3 or 4 below):

1. ☑ The assignee of the entire right, title, and interest.

2. ☐ An assignee of less than the entire right, title, and interest (check applicable box):

☐ The extent (by percentage) of its ownership interest is _____%. Additional Statement(s) by the owners holding the balance of the interest must be submitted to account for 100% of the ownership interest.

☐ There are unspecified percentages of ownership. The other parties, including inventors, who together own the entire right, title and interest are:

Additional Statement(s) by the owner(s) holding the balance of the interest must be submitted to account for the entire right, title, and interest.

3. ☐ The assignee of an undivided interest in the entirety (a complete assignment from one of the joint inventors was made). The other parties, including inventors, who together own the entire right, title, and interest are:

Additional Statement(s) by the owner(s) holding the balance of the interest must be submitted to account for the entire right, title, and interest.

4. ☐ The recipient, via a court proceeding or the like (*e.g.*, bankruptcy, probate), of an undivided interest in the entirety (a complete transfer of ownership interest was made). The certified document(s) showing the transfer is attached.

The interest identified in option 1, 2 or 3 above (not option 4) is evidenced by either (choose **one** of options A or B below):

A. ☑ An assignment from the inventor(s) of the patent application/patent identified above. The assignment was recorded in the United States Patent and Trademark Office at Reel 059650, Frame 0299, or for which a copy thereof is attached.

B. ☐ A chain of title from the inventor(s), of the patent application/patent identified above, to the current assignee as follows:

1. From: _____ To: _____

The document was recorded in the United States Patent and Trademark Office at

Reel _____, Frame _____, or for which a copy thereof is attached.

2. From: _____ To: _____

The document was recorded in the United States Patent and Trademark Office at

Reel _____, Frame _____, or for which a copy thereof is attached.

This collection of information is required by 37 CFR 3.73(b). The information is required to obtain or retain a benefit by the public which is to file (and by the USPTO to process) an application. Confidentiality is governed by 35 U.S.C. 122 and 37 CFR 1.11 and 1.14. This collection is estimated to take 12 minutes to complete, including gathering, preparing, and submitting the completed application form to the USPTO. Time will vary depending upon the individual case. Any comments on the amount of time you require to complete this form and/or suggestions for reducing this burden, should be sent to the Chief Information Officer, U.S. Patent and Trademark Office, U.S. Department of Commerce, P.O. Box 1450, Alexandria, VA 22313-1450. DO NOT SEND FEES OR COMPLETED FORMS TO THIS ADDRESS. **SEND TO: Commissioner for Patents, P.O. Box 1450, Alexandria, VA 22313-1450.**

If you need assistance in completing the form, call 1-800-PTO-9199 and select option 2.

Under the Paperwork Reduction Act of 1995, no persons are required to respond to a collection of information unless it displays a valid OMB control number.

STATEMENT UNDER 37 CFR 3.73(c)

3. From: _____ To: _____

The document was recorded in the United States Patent and Trademark Office at

Reel _____, Frame _____, or for which a copy thereof is attached.

4. From: _____ To: _____

The document was recorded in the United States Patent and Trademark Office at

Reel _____, Frame _____, or for which a copy thereof is attached.

5. From: _____ To: _____

The document was recorded in the United States Patent and Trademark Office at

Reel _____, Frame _____, or for which a copy thereof is attached.

6. From: _____ To: _____

The document was recorded in the United States Patent and Trademark Office at

Reel _____, Frame _____, or for which a copy thereof is attached.

☐ Additional documents in the chain of title are listed on a supplemental sheet(s).

☑ As required by 37 CFR 3.73(c)(1)(i), the documentary evidence of the chain of title from the original owner to the assignee was, or concurrently is being, submitted for recordation pursuant to 37 CFR 3.11.

[NOTE: A separate copy (i.e., a true copy of the original assignment document(s)) must be submitted to Assignment Division in accordance with 37 CFR Part 3, to record the assignment in the records of the USPTO. See MPEP 302.08]

The undersigned (whose title is supplied below) is authorized to act on behalf of the assignee.

/Katherine Ann Rubino/	7/21/2023
Signature	Date
Katherine Ann Rubino	76990
Printed or Typed Name	Title or Registration Number

Privacy Act Statement

The **Privacy Act of 1974 (P.L. 93-579)** requires that you be given certain information in connection with your submission of the attached form related to a patent application or patent. Accordingly, pursuant to the requirements of the Act, please be advised that: (1) the general authority for the collection of this information is 35 U.S.C. 2(b)(2); (2) furnishing of the information solicited is voluntary; and (3) the principal purpose for which the information is used by the U.S. Patent and Trademark Office is to process and/or examine your submission related to a patent application or patent. If you do not furnish the requested information, the U.S. Patent and Trademark Office may not be able to process and/or examine your submission, which may result in termination of proceedings or abandonment of the application or expiration of the patent.

The information provided by you in this form will be subject to the following routine uses:

1. The information on this form will be treated confidentially to the extent allowed under the Freedom of Information Act (5 U.S.C. 552) and the Privacy Act (5 U.S.C 552a). Records from this system of records may be disclosed to the Department of Justice to determine whether disclosure of these records is required by the Freedom of Information Act.
2. A record from this system of records may be disclosed, as a routine use, in the course of presenting evidence to a court, magistrate, or administrative tribunal, including disclosures to opposing counsel in the course of settlement negotiations.
3. A record in this system of records may be disclosed, as a routine use, to a Member of Congress submitting a request involving an individual, to whom the record pertains, when the individual has requested assistance from the Member with respect to the subject matter of the record.
4. A record in this system of records may be disclosed, as a routine use, to a contractor of the Agency having need for the information in order to perform a contract. Recipients of information shall be required to comply with the requirements of the Privacy Act of 1974, as amended, pursuant to 5 U.S.C. 552a(m).
5. A record related to an International Application filed under the Patent Cooperation Treaty in this system of records may be disclosed, as a routine use, to the International Bureau of the World Intellectual Property Organization, pursuant to the Patent Cooperation Treaty.
6. A record in this system of records may be disclosed, as a routine use, to another federal agency for purposes of National Security review (35 U.S.C. 181) and for review pursuant to the Atomic Energy Act (42 U.S.C. 218(c)).
7. A record from this system of records may be disclosed, as a routine use, to the Administrator, General Services, or his/her designee, during an inspection of records conducted by GSA as part of that agency's responsibility to recommend improvements in records management practices and programs, under authority of 44 U.S.C. 2904 and 2906. Such disclosure shall be made in accordance with the GSA regulations governing inspection of records for this purpose, and any other relevant (*i.e.*, GSA or Commerce) directive. Such disclosure shall not be used to make determinations about individuals.
8. A record from this system of records may be disclosed, as a routine use, to the public after either publication of the application pursuant to 35 U.S.C. 122(b) or issuance of a patent pursuant to 35 U.S.C. 151. Further, a record may be disclosed, subject to the limitations of 37 CFR 1.14, as a routine use, to the public if the record was filed in an application which became abandoned or in which the proceedings were terminated and which application is referenced by either a published application, an application open to public inspection or an issued patent.
9. A record from this system of records may be disclosed, as a routine use, to a Federal, State, or local law enforcement agency, if the USPTO becomes aware of a violation or potential violation of law or regulation.

Electronic Acknowledgement Receipt

EFS ID:	48331435
Application Number:	15679206
International Application Number:	
Confirmation Number:	2672
Title of Invention:	POCKET BRA SYSTEM
First Named Inventor/Applicant Name:	Sharon Goff
Customer Number:	32118
Filer:	Keegan M. Caldwell/Rachel Riley
Filer Authorized By:	Keegan M. Caldwell
Attorney Docket Number:	17-095-SG
Receipt Date:	21-JUL-2023
Filing Date:	17-AUG-2017
Time Stamp:	13:36:30
Application Type:	Utility under 35 USC 111(a)

Payment information:

Submitted with Payment	no

File Listing:

Document Number	Document Description	File Name	File Size(Bytes)/ Message Digest	Multi Part /.zip	Pages (if appl.)
1	Power of Attorney	1324-001USC7_POA.pdf	243810 7bbaf90de43a4899007eedffb005c3be5765c0a3	no	4

Warnings:

Information:					
2	Assignee showing of ownership per 37 CFR 3.73	1324-001USC7_37CFR.pdf	161415 3e6827d9abac15f49f054db240a64a1b679c304d	no	3
Warnings:					
Information:					
			Total Files Size (in bytes):	405225	

This Acknowledgement Receipt evidences receipt on the noted date by the USPTO of the indicated documents, characterized by the applicant, and including page counts, where applicable. It serves as evidence of receipt similar to a Post Card, as described in MPEP 503.

New Applications Under 35 U.S.C. 111
If a new application is being filed and the application includes the necessary components for a filing date (see 37 CFR 1.53(b)-(d) and MPEP 506), a Filing Receipt (37 CFR 1.54) will be issued in due course and the date shown on this Acknowledgement Receipt will establish the filing date of the application.
National Stage of an International Application under 35 U.S.C. 371
If a timely submission to enter the national stage of an international application is compliant with the conditions of 35 U.S.C. 371 and other applicable requirements a Form PCT/DO/EO/903 indicating acceptance of the application as a national stage submission under 35 U.S.C. 371 will be issued in addition to the Filing Receipt, in due course.
New International Application Filed with the USPTO as a Receiving Office
If a new international application is being filed and the international application includes the necessary components for an international filing date (see PCT Article 11 and MPEP 1810), a Notification of the International Application Number and of the International Filing Date (Form PCT/RO/105) will be issued in due course, subject to prescriptions concerning national security, and the date shown on this Acknowledgement Receipt will establish the international filing date of the application.

UNITED STATES PATENT AND TRADEMARK OFFICE

UNITED STATES DEPARTMENT OF COMMERCE
United States Patent and Trademark Office
Address: COMMISSIONER FOR PATENTS
P.O. Box 1450
Alexandria, Virginia 22313-1450
www.uspto.gov

APPLICATION NUMBER	FILING OR 371(C) DATE	FIRST NAMED APPLICANT	ATTY. DOCKET NO./TITLE
15/679,206	08/17/2017	Sharon Goff	16-029-SG

CONFIRMATION NO. 2672

POWER OF ATTORNEY NOTICE

OC000000059776665

32118
LAMBERT SHORTELL & CONNAUGHTON
100 Franklin Street
Suite 903
BOSTON, MA 02110

Date Mailed: 07/27/2023

NOTICE REGARDING CHANGE OF POWER OF ATTORNEY

This is in response to the Power of Attorney filed 07/21/2023.

- The Power of Attorney to you in this application has been revoked by the applicant. Future correspondence will be mailed to the new address of record(37 CFR 1.33).

Questions about the contents of this notice and the requirements it sets forth should be directed to the Office of Data Management, Application Assistance Unit, at **(571) 272-4000** or **(571) 272-4200** or **1-888-786-0101**.

/wrhopkins/

UNITED STATES PATENT AND TRADEMARK OFFICE

UNITED STATES DEPARTMENT OF COMMERCE
United States Patent and Trademark Office
Address: COMMISSIONER FOR PATENTS
P.O. Box 1450
Alexandria, Virginia 22313-1450
www.uspto.gov

APPLICATION NUMBER	FILING OR 371(C) DATE	FIRST NAMED APPLICANT	ATTY. DOCKET NO./TITLE
15/679,206	08/17/2017	Sharon Goff	16-029-SG

CONFIRMATION NO. 2672

POA ACCEPTANCE LETTER

OC000000059776734

145340
Caldwell Intellectual Property Law
200 Clarendon Street
59th Floor
Boston, MA 02116

Date Mailed: 07/27/2023

NOTICE OF ACCEPTANCE OF POWER OF ATTORNEY

This is in response to the Power of Attorney filed 07/21/2023.

The Power of Attorney in this application is accepted. Correspondence in this application will be mailed to the above address as provided by 37 CFR 1.33.

Questions about the contents of this notice and the requirements it sets forth should be directed to the Office of Data Management, Application Assistance Unit, at **(571) 272-4000** or **(571) 272-4200** or **1-888-786-0101**.

/wrhopkins/

TO: annie@caldwellip.com,rachel@caldwellip.com,docketing@caldwellip.com
FROM: noreply@uspto.gov
CC: patentcenter_eofficeaction@uspto.gov
SUBJECT: USPTO: Patent Electronic System - Correspondence Notification for Customer Number 145340

Thu Jul 27 06:14:44 EDT 2023

Dear Patent Center Customer:

Correspondence Address:

Caldwell Intellectual Property Law
200 Clarendon Street
59th Floor
Boston,MASSACHUSETTS,02116
UNITED STATES

This is a courtesy notification regarding the following USPTO patent application(s) associated with your Customer Number, 145340, that have new outgoing correspondence. This correspondence is now available for viewing in Patent Center.

The official date of notification of the outgoing correspondence will be indicated on the form (e.g., PTOL-90) accompanying the correspondence.

Disclaimer:
The list of documents shown below are provided as a courtesy and is not part of the official file wrapper. The content of the images shown in the Image File Wrapper is the official record.

Application	Document	Mailroom Date	Attorney Docket No.
15679206	N570	07/27/2023	16-029-SG
15679206	N570	07/27/2023	16-029-SG

To view your correspondence online, please sign in to Patent Center and then select Workbench/View correspondence. To update your email address(es), select Manage/Manage customer numbers.

If you have any questions, please contact the Patent Electronic Business Center (EBC) at ebc@uspto.gov or 866-217-9197 Monday – Friday, 6 a.m. to midnight ET.

Please do not reply to this email as it was sent from an unmonitored mailbox.

Sincerely,

The Patent Center Team