US010010117B1

(12) **United States Patent**
Rendone

(10) **Patent No.: US 10,010,117 B1**
(45) **Date of Patent: *Jul. 3, 2018**

(54) **BRA WITH STORAGE POCKETS**

(71) Applicant: **NIKE, Inc.**, Beaverton, OR (US)

(72) Inventor: **Nicole Rendone**, Beaverton, OR (US)

(73) Assignee: **NIKE, Inc.**, Beaverton, OR (US)

(*) Notice: Subject to any disclaimer, the term of this patent is extended or adjusted under 35 U.S.C. 154(b) by 0 days.

This patent is subject to a terminal disclaimer.

(21) Appl. No.: **15/597,364**

(22) Filed: **May 17, 2017**

(51) **Int. Cl.**
A41C 3/00 (2006.01)

(52) **U.S. Cl.**
CPC ***A41C 3/0035*** (2013.01); ***A41C 3/0014*** (2013.01); ***A41C 3/0057*** (2013.01)

(58) **Field of Classification Search**
CPC . A41B 9/001; A41D 1/14; A41D 1/22; A41D 27/20
USPC 450/89, 86, 36, 54–57; 2/247, 250, 220, 2/76, 69, 67
See application file for complete search history.

(56) **References Cited**

U.S. PATENT DOCUMENTS

246,675	A	9/1881	Hilboen	
867,487	A	10/1907	Drennan et al.	
1,900,129	A	3/1933	Ring et al.	
2,149,819	A	3/1939	Rubinstein et al.	
2,436,430	A	2/1948	Hart et al.	
2,492,862	A *	12/1949	Harvey	A41C 3/0035 150/101
2,503,847	A	4/1950	Shanahan et al.	
2,593,711	A	4/1952	Weatherly et al.	
2,610,325	A	9/1952	Schlussel et al.	
2,624,881	A *	1/1953	Lee	A41C 3/0035 2/247
2,671,899	A	3/1954	Kroger et al.	
2,764,759	A	10/1956	Gazelle et al.	
2,920,628	A	1/1960	York et al.	
3,078,852	A *	2/1963	Stapleton	A41C 3/00 450/89
3,459,191	A	8/1969	Barg	
3,518,998	A	7/1970	Barg	
3,565,081	A	2/1971	Barg	
4,666,432	A	5/1987	McNeish et al.	

(Continued)

FOREIGN PATENT DOCUMENTS

CN	202566327	U	12/2012
CN	202566328	U	12/2012

(Continued)

OTHER PUBLICATIONS

"Women's Stow-N-Go Bra A/B" Last accessed Feb. 20, 2017 https://www.thenorthface.com/shop/womens-stow-n-go-bra-a-b-nf0a2tin-c1.

(Continued)

Primary Examiner — Gloria Hale
(74) *Attorney, Agent, or Firm* — Shook, Hardy and Bacon L.L.P.

(57) **ABSTRACT**

Aspects herein are directed to a bra with multiple pockets positioned at different locations on the bra to provide a variety of storage options. The bra comprises one or more portions comprised of layers of material where the pocket spaces are formed between the layers of material. The layers of material of the different portions are joined along their perimeter edges except for one or more select areas that form openings in communication with the pocket spaces.

18 Claims, 11 Drawing Sheets

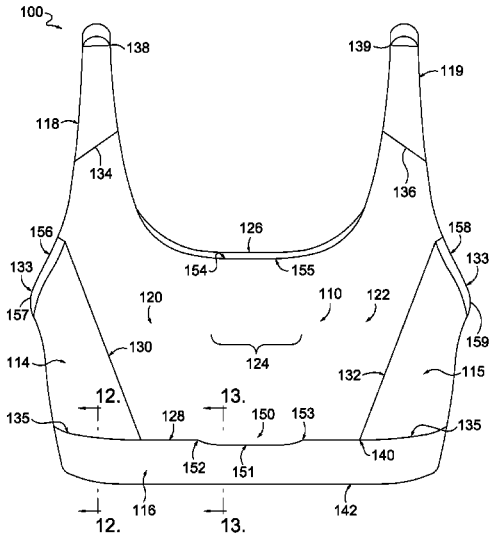

(56) **References Cited**

U.S. PATENT DOCUMENTS

5,067,178 A 11/1991 Katchka et al.
5,496,205 A 3/1996 Lee
5,573,441 A 11/1996 Smith et al.
D408,963 S 5/1999 Consolo
6,099,382 A 8/2000 Wilson
6,102,772 A 8/2000 Fernandez
6,176,761 B1 1/2001 Underhill
D448,541 S 10/2001 Robinson
6,434,751 B1 8/2002 Gustafson et al.
6,517,410 B1 2/2003 Underhill
6,626,733 B1 9/2003 Knutson
D522,717 S 6/2006 Aurilia et al.
7,081,034 B1 7/2006 Zoellner
D529,259 S 10/2006 Faagau
7,234,996 B1 6/2007 Donker
D554,326 S 11/2007 Nuse
7,364,491 B2 4/2008 Updyke
7,396,274 B2 7/2008 Wiegmann
D597,279 S 8/2009 Spillman
7,585,200 B1 9/2009 McLaren
7,753,759 B2 7/2010 Pintor et al.
D625,488 S 10/2010 Messman et al.
D630,816 S 1/2011 Baramki
D630,817 S 1/2011 McKee
7,867,058 B2 1/2011 Sweeney
D632,458 S 2/2011 Shirer
D646,461 S 10/2011 Lewando
D658,352 S 5/2012 Pinner
8,216,023 B2 7/2012 Donnelly et al.
8,257,140 B2 9/2012 Kenny
D668,837 S 10/2012 Palladino
8,312,568 B2 11/2012 Marois et al.
D686,389 S 7/2013 Hayes et al.
8,484,763 B1 7/2013 Lucas
D696,507 S 12/2013 Tharp
8,597,071 B2 12/2013 Shweky et al.
8,597,072 B1 * 12/2013 Lucas A41C 3/0035 2/247
8,771,036 B2 7/2014 Gentry et al.
8,898,816 B2 12/2014 Highfield
D725,872 S 4/2015 Robinson
9,060,550 B2 6/2015 Conrad
D733,394 S 7/2015 Gentry et al.
D737,021 S 8/2015 Gonzales
D741,566 S 10/2015 Perry et al.
D745,247 S 12/2015 Mazard
D750,868 S 3/2016 Randall
9,289,016 B1 3/2016 Goff
9,295,288 B1 3/2016 Goff
D753,370 S 4/2016 Daniels
9,307,793 B2 4/2016 Kenny
9,408,420 B2 8/2016 Betts
9,456,639 B2 10/2016 Aylward
9,480,287 B2 11/2016 Black et al.
9,486,016 B2 11/2016 Cataldo
D783,930 S 4/2017 Rothert
D801,628 S 11/2017 Staub
D808,114 S 1/2018 Begriche et al.
2002/0100108 A1 8/2002 Stuart
2002/0174475 A1 11/2002 Mayr
2003/0101502 A1 6/2003 Hayes
2005/0075047 A1 4/2005 Zagame
2006/0121826 A1 * 6/2006 Nazzaro A41C 3/0035 450/89
2007/0270078 A1 11/2007 Henry
2007/0287359 A1 12/2007 Urushihata et al.
2007/0298684 A1 12/2007 Spagna
2009/0209173 A1 8/2009 Arledge et al.
2009/0300818 A1 * 12/2009 Waite A41D 1/14 2/76
2010/0281595 A1 * 11/2010 Gernes A41B 9/001 2/69
2011/0223832 A1 * 9/2011 Rose A41C 3/08 450/86
2011/0225700 A1 9/2011 Kogut
2011/0244758 A1 10/2011 Boatright et al.
2011/0275276 A1 11/2011 Shashy
2011/0277206 A1 11/2011 Sokolowski
2012/0028541 A1 2/2012 Donnelly et al.
2012/0034842 A1 2/2012 Roberts et al.
2012/0064799 A1 3/2012 Rivers
2012/0142253 A1 6/2012 Javaid et al.
2012/0276812 A1 11/2012 Wollowick
2012/0311758 A1 * 12/2012 Nicholson A41D 27/20 2/67
2013/0225042 A1 8/2013 Ave et al.
2013/0305433 A1 * 11/2013 Hedrick A41D 1/22 2/220
2014/0051331 A1 2/2014 Handras
2014/0106646 A1 4/2014 Delgado
2014/0115748 A1 5/2014 Bems et al.
2015/0080860 A1 3/2015 Farrell
2015/0289570 A1 10/2015 Conrad
2015/0296895 A1 10/2015 Muir
2015/0359273 A1 * 12/2015 Olson A41B 9/001 2/250
2016/0058079 A1 3/2016 Sexton
2016/0095372 A1 4/2016 Peterson et al.
2016/0143424 A1 * 5/2016 Stephens A45F 3/005 224/222
2017/0202274 A1 7/2017 Blackwell
2017/0360118 A1 12/2017 Randall et al.
2018/0014579 A1 1/2018 Gumlaw

FOREIGN PATENT DOCUMENTS

DE 3203872 A1 8/1983
DE 202015104392 U1 10/2015
DE 102014018984 A1 6/2016
EP 1673992 A2 6/2006
FR 2558347 A1 7/1985
GB 2468175 A 9/2010
JP H10237705 A 9/1998
JP 2001020105 A 1/2001
JP 2002027075 A 1/2002
WO 2016011490 A1 1/2016

OTHER PUBLICATIONS

"Zoot: Run Moonlight Bra Women's" Last accessed Feb. 20, 2017 https://www.rei.com/rei-garage/product/100450/zoot-run-moonlight-bra-womens.
"The Bra With Pockets!"; May 2, 2014 http://web.archive.org/web/20140502060922/http://pocketbra.com/.
"Hydro Pocket"; Aug. 22, 2014 http://web.archive.org/web/20140822054752/http://hydro-pocket.com/.
"Luana Cross Strap Pocket Sports Bra" Last accessed Feb. 20, 2017 http://www.swoob.com/fitness-fashion-sportswear/swoob-luana-cross-strap-sports-bra.
"Sarah Sports Bra Bahamas" Last accessed Feb. 20, 2017 https://www.senitaathletics.com/products/sarah-sports-bra-bahamas.
"JoeyBra, the first sexy and comfortable pocketed bra!" Last accessed Feb. 20, 2017 https://www.kickstarter.com/projects/1094440554/joeybra-the-first-sexy-and-fashionable-pocketed-br.
"Apex Compression Sports Bra" Last accessed Feb. 20, 2017 https://www.sportportactive.com/shop/apex-sports-bra/.
"Grade's Gear Sports Bra" Last accessed Feb. 20, 2017 https://www.graciesgearandtraining.com/store/sports-bra-pocket-pink/.
"Grade's Gear Long Tank" Last accessed Feb. 20, 2017 https://www.graciesgearandtraining.com/store/gracies-gear-long-tank/.
"Pocket Bra Cups" Last accessed Feb. 20, 2017 http://kickended.com/projects/1125757884/.
"Lululemon Neon Pink Pack It in Bra", Feb. 20, 2017 Last accessed Sep. 1, 2017 https://www.amazon.com/Lululemon-Neon-Pink-Pack-Bra/dp/B01KVUR86C.
"Cleavage Caddy Snaps to Bras, Gives Women a Secret Purse Underneath Their Blouses" http://www.coolthings.com/cleavage-caddy-snaps-to-bras-gives-women-a-secret-purse-underneath-their-blouses/.

(56) **References Cited**

OTHER PUBLICATIONS

"Secret Stash Bra Pocket" Last accessed Feb. 20, 2017 https://brazabra.com/dressing-solutions-personal-care/secret-stash-bra-pocket/.
Notice of Allowance dated Feb. 22, 2018 in U.S. Appl. No. 15/718,171, 6 pages.
Notice of Allowance dated Mar. 14, 2018 in Design U.S. Appl. No. 29/604,429, 9 pages.

* cited by examiner

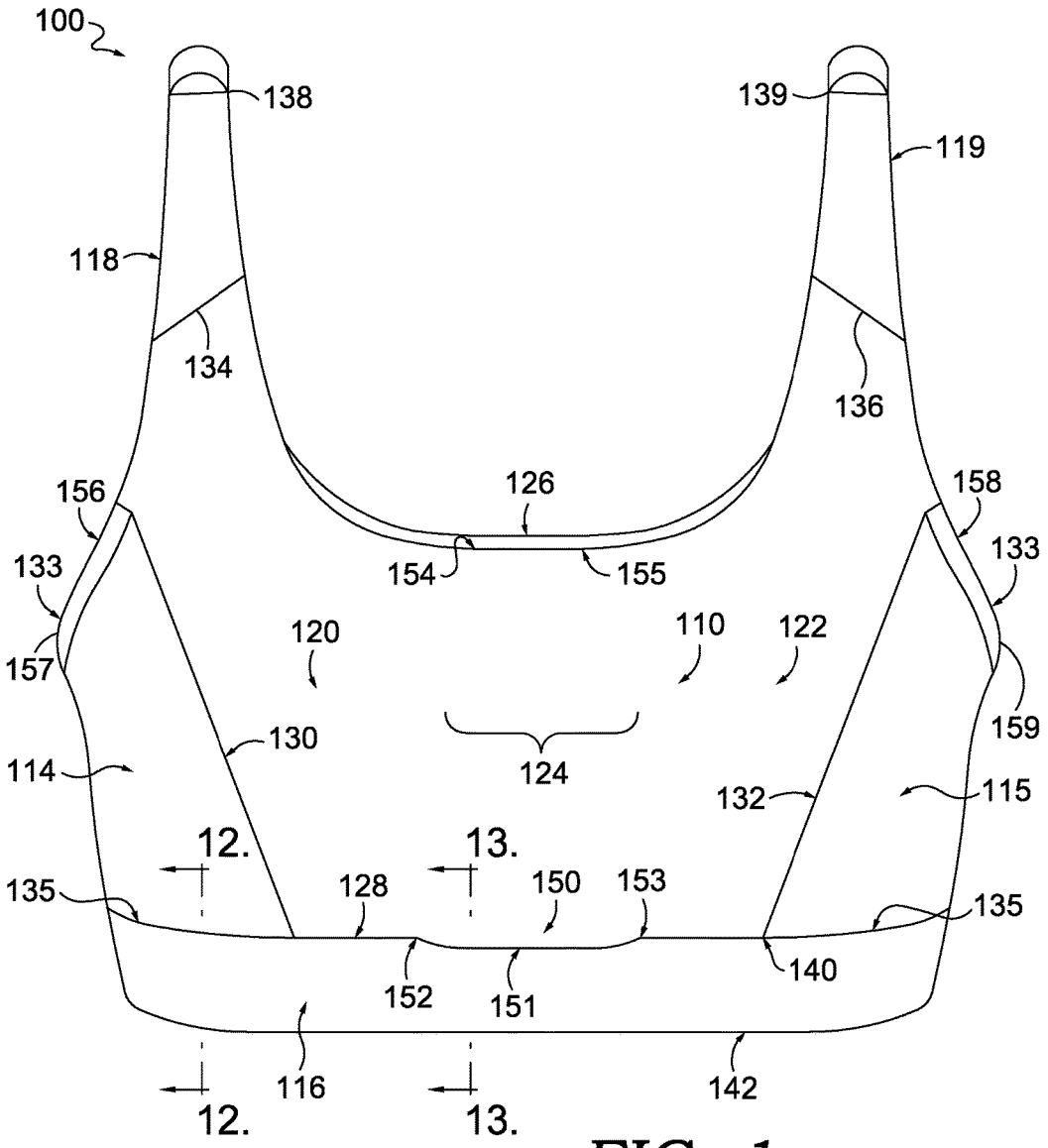
100
138
139
119
118
134
136
126
156
158
133
133
154
155
157
120
110
122
159
130
124
114
132
115
12.
13.
135
128
150
153
135
152
151
140
116
142
12.
13.

FIG. 1.

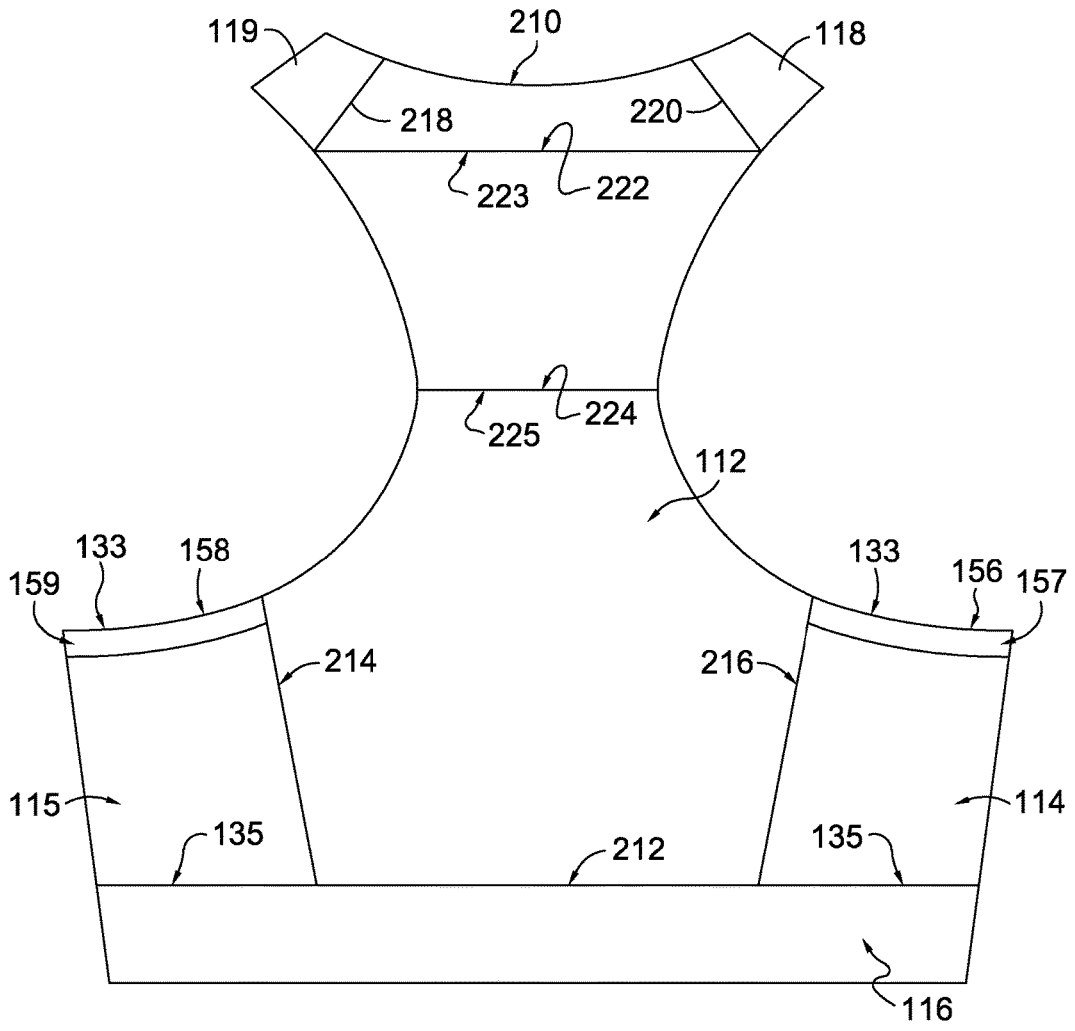
119
210
118
218
220
223
222
225
224
112
133
158
159
133
156
157
214
216
115
114
135
212
135
116

FIG. 2.

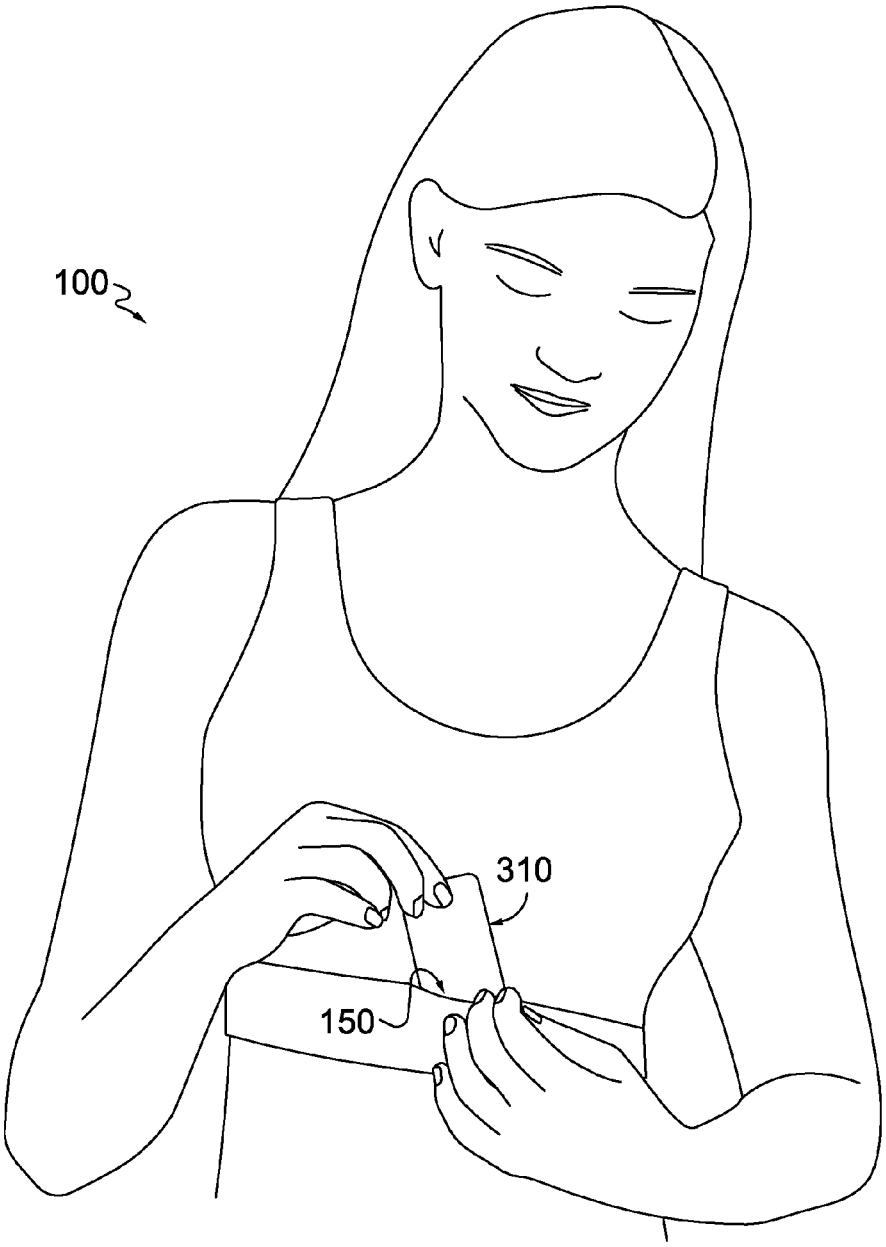

FIG. 3.

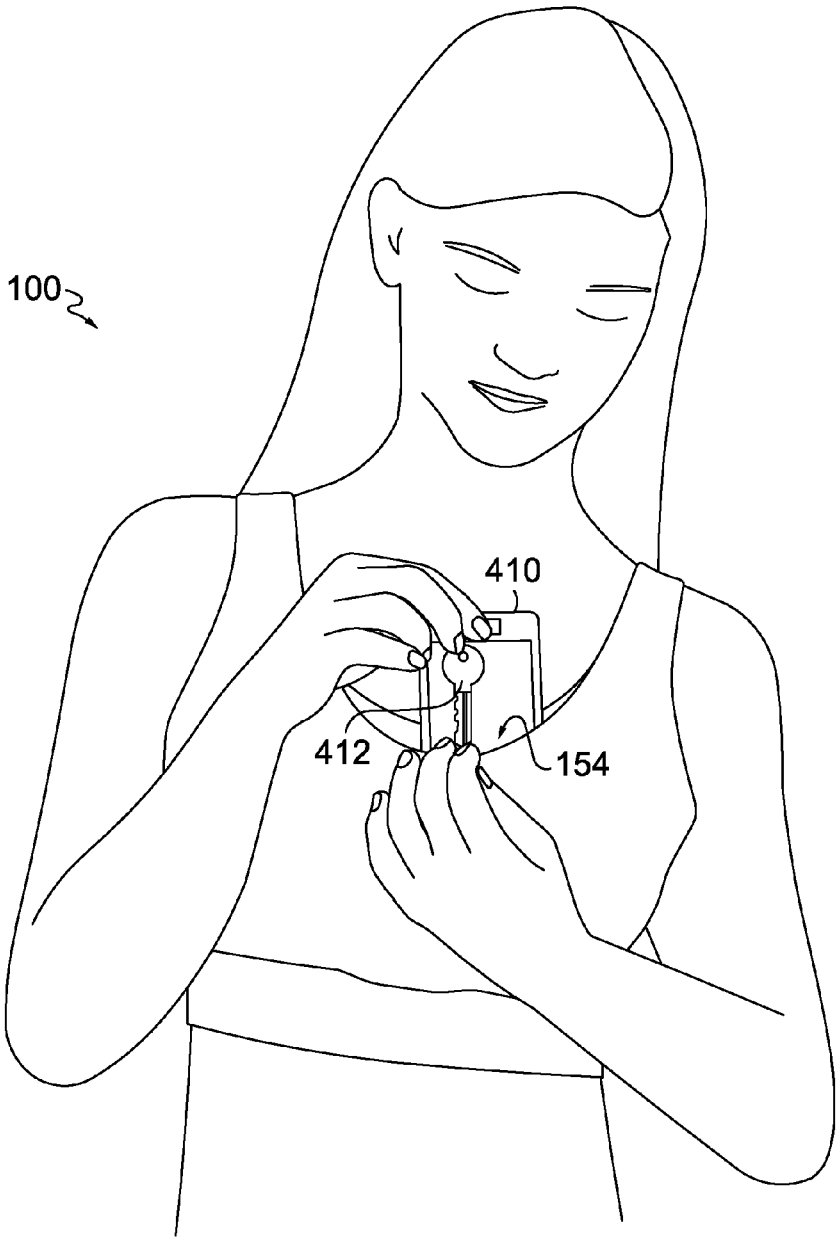

FIG. 4.

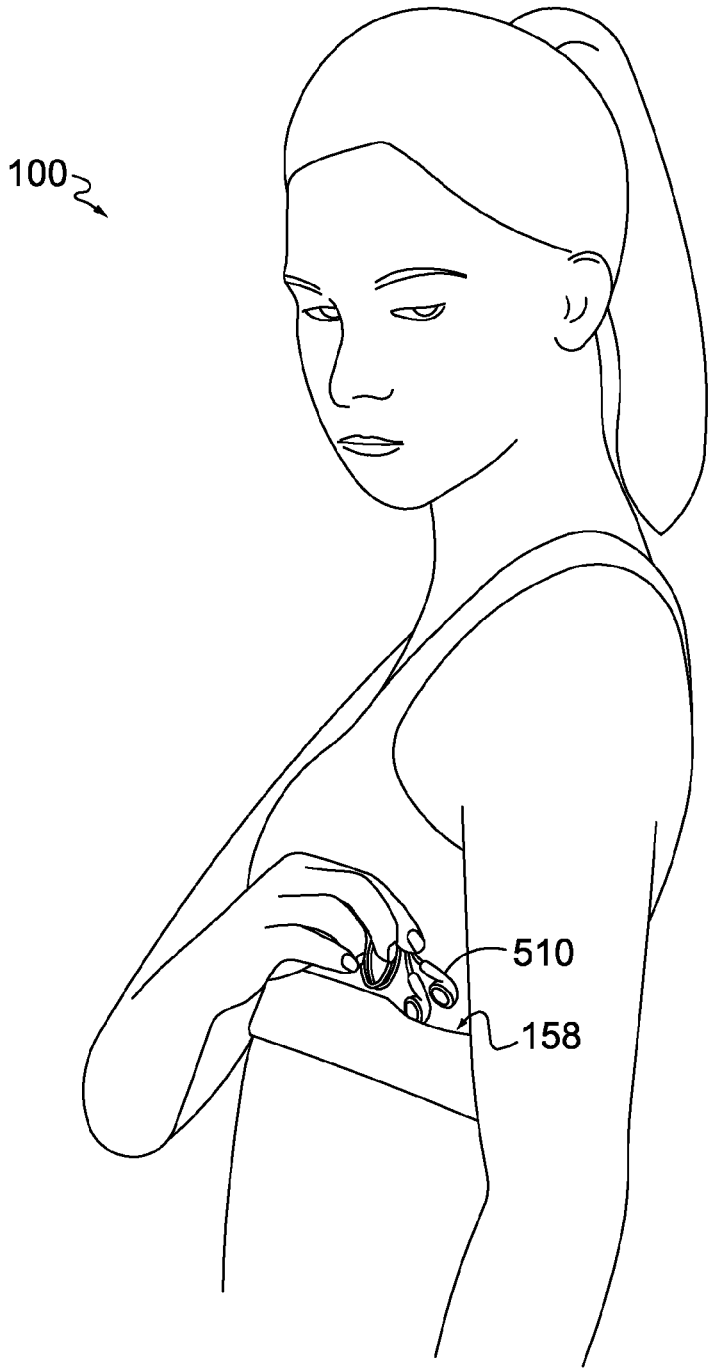

FIG. 5.

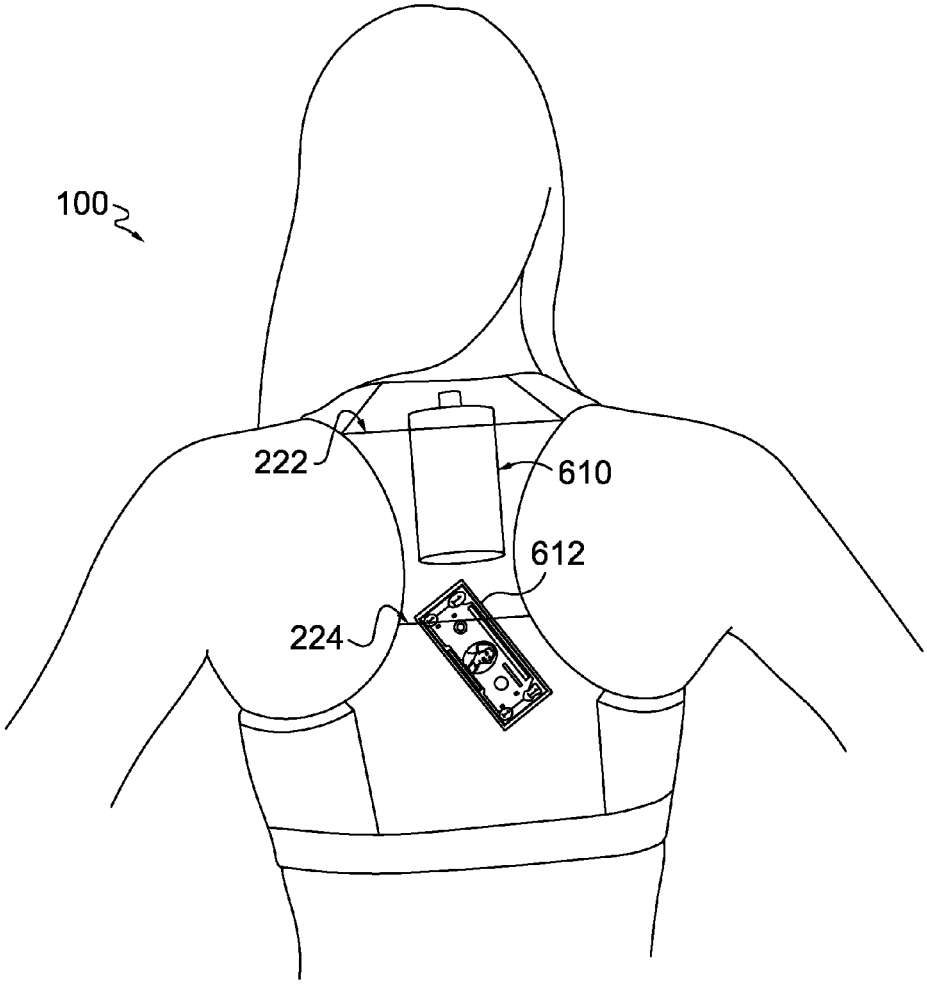

FIG. 6.

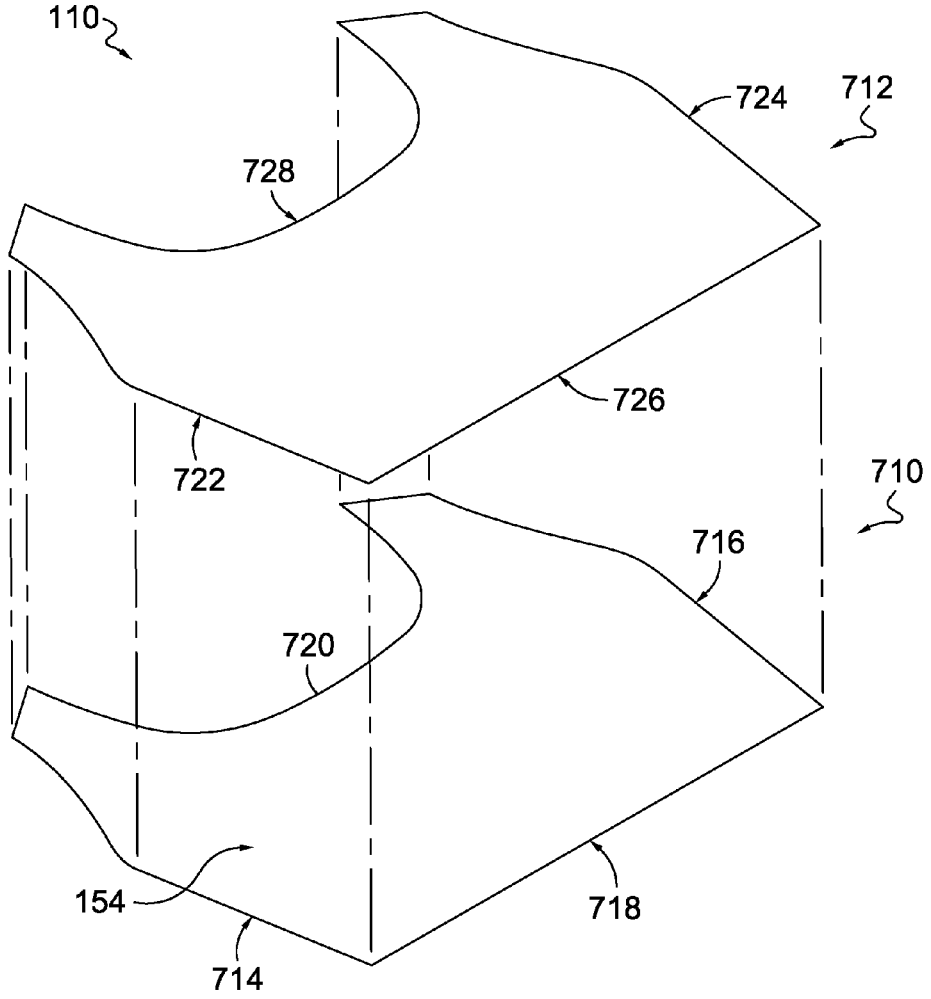

FIG. 7.

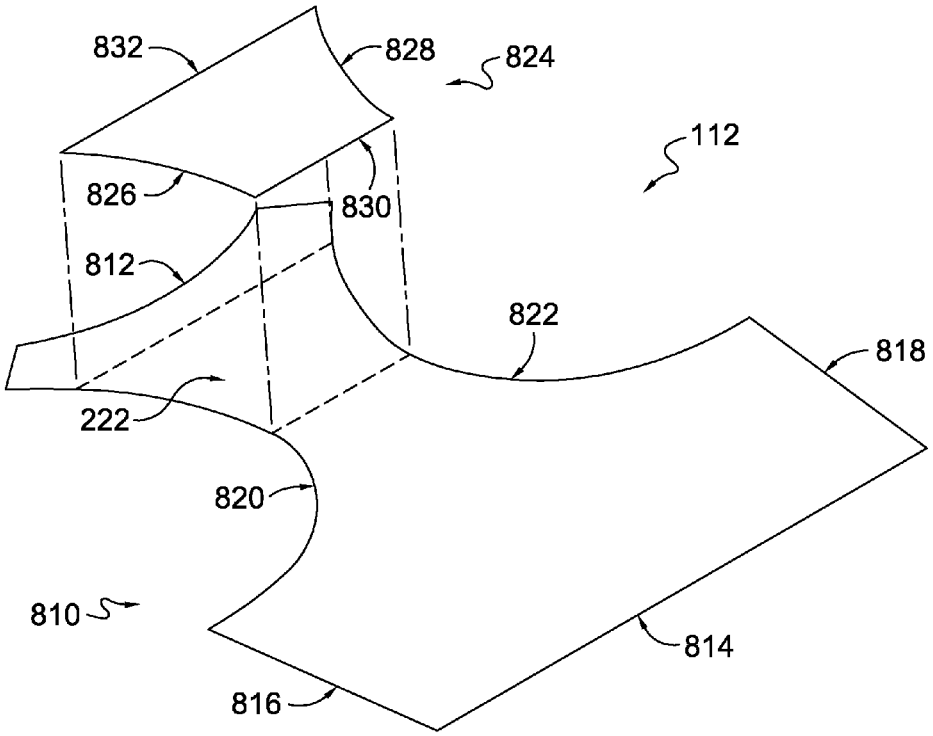

FIG. 8.

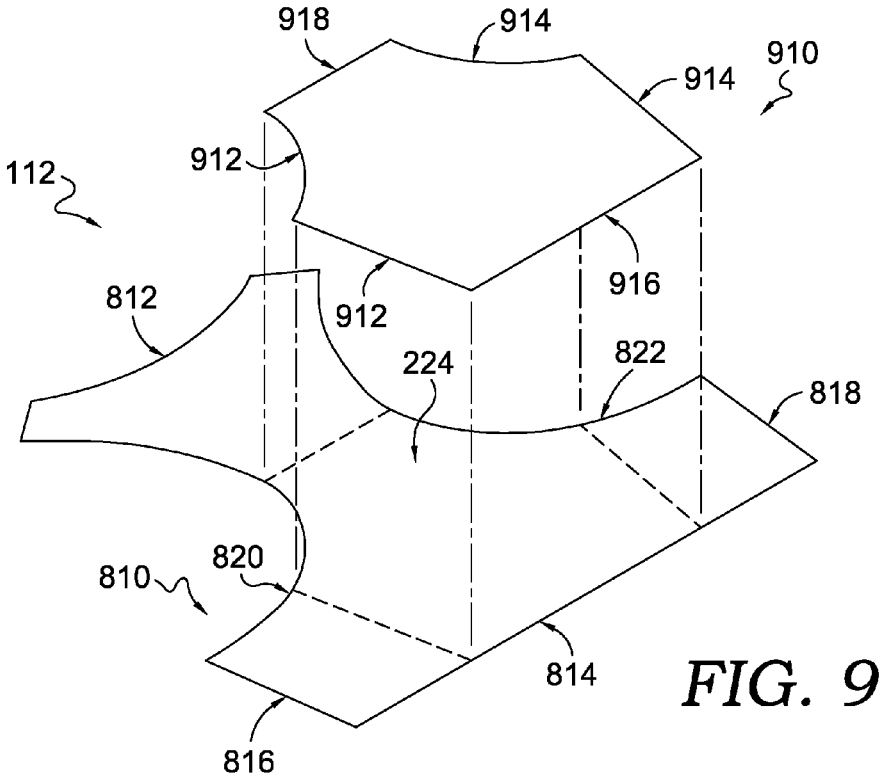
918
914
910
914
112
912
916
812
912
224
822
818
820
810
814
816

FIG. 9.

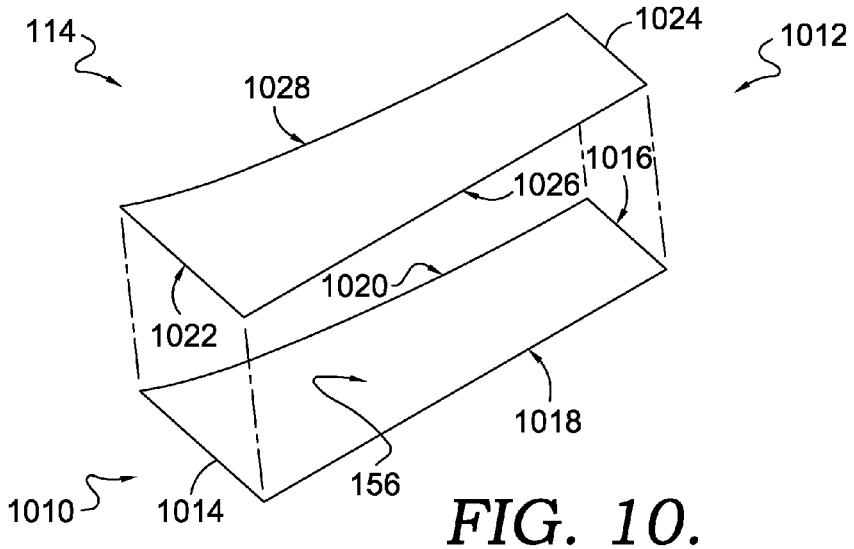
114
1024
1012
1028
1016
1026
1020
1022
1018
156
1010
1014

FIG. 10.

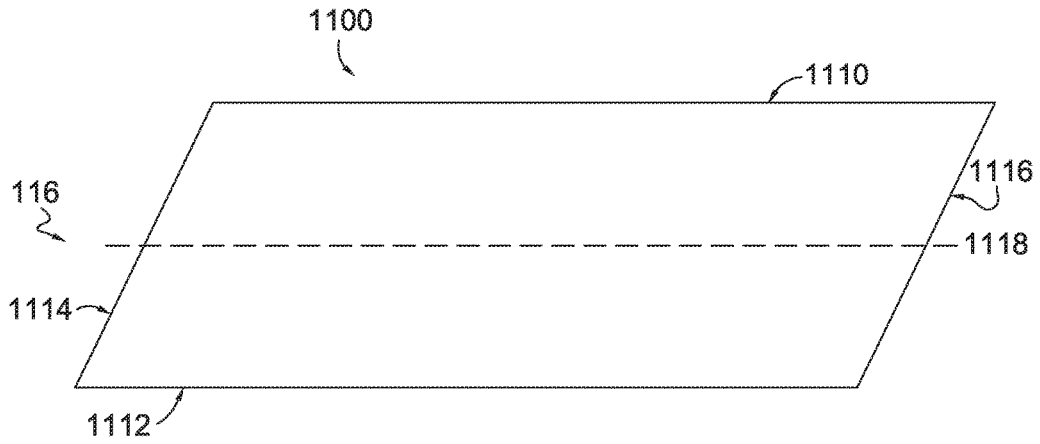

FIG. 11A.

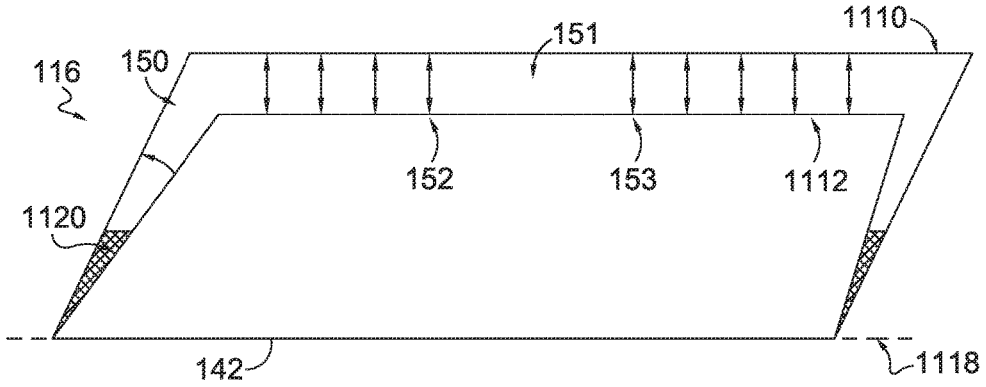

FIG. 11B.

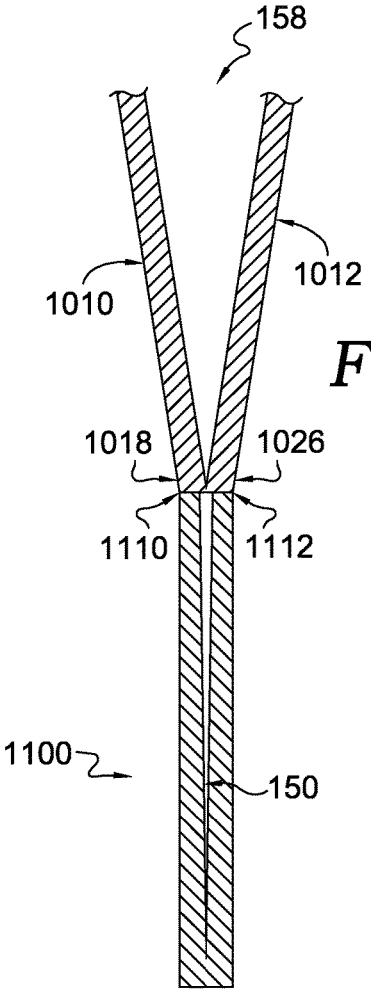
158
1010
1012
1018
1026
1110
1112
1100
150

FIG. 12.

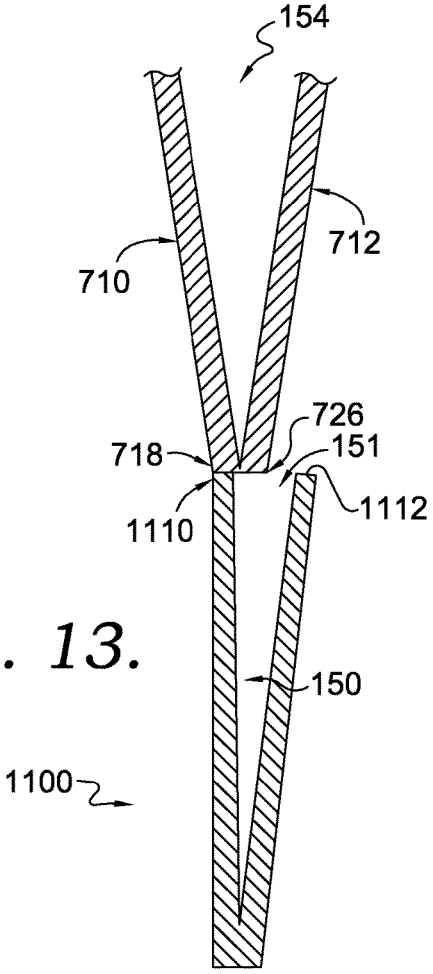
154
710
712
726
718
151
1110
1112
150
1100

FIG. 13.

BRA WITH STORAGE POCKETS

TECHNICAL FIELD

Aspects herein relate to a bra having pockets for stowing items.

BACKGROUND

Bras, especially sport bras, are generally worn to support a wearer's breasts during, for example, athletic activities. These bras generally lack pocket structures for stowing items which may inconvenience the wearer.

BRIEF DESCRIPTION OF THE DRAWINGS

Examples of the present invention are described in detail below with reference to the attached drawings figures, wherein:

FIG. **1** illustrates a front view of an exemplary bra with storage pockets in accordance with aspects herein;

FIG. **2** illustrates a back view of the exemplary bra of FIG. **1** in accordance with aspects herein;

FIGS. **3-6** illustrate the exemplary bra of FIGS. **1** and **2** in various in-use configurations in accordance with aspects herein;

FIG. **7** illustrates an exploded view of a front portion of the exemplary bra of FIGS. **1** and **2** in accordance with aspects herein;

FIG. **8** illustrates a first exploded view of a back portion of the exemplary bra of FIGS. **1** and **2** in accordance with aspects herein;

FIG. **9** illustrates a second exploded view of the back portion of the exemplary bra of FIGS. **1** and **2** in accordance with aspects herein;

FIG. **10** illustrates an exploded view of a side portion of the exemplary bra of FIGS. **1** and **2** in accordance with aspects herein;

FIGS. **11**A and **11**B illustrate a construction of an underband portion of the exemplary bra of FIGS. **1** and **2** in accordance with aspects herein;

FIG. **12** illustrates an exemplary cross-section taken at cut line **12-12** of FIG. **1** in accordance with aspects herein; and

FIG. **13** illustrates an exemplary cross-section taken at cut line **13-13** of FIG. **1** in accordance with aspects herein.

DETAILED DESCRIPTION

The subject matter of the present invention is described with specificity herein to meet statutory requirements. However, the description itself is not intended to limit the scope of this disclosure. Rather, the inventors have contemplated that the claimed or disclosed subject matter might also be embodied in other ways, to include different steps or combinations of steps similar to the ones described in this document, in conjunction with other present or future technologies. Moreover, although the terms "step" and/or "block" might be used herein to connote different elements of methods employed, the terms should not be interpreted as implying any particular order among or between various steps herein disclosed unless and except when the order of individual steps is explicitly stated.

At a high level, aspects herein relate to a support garment, such as a bra, having storage pockets positioned at multiple different locations on the bra to meet the different preferences of a wearer. Female wearers often want and need to store items during training but prefer not to carry additional

accessories to stow the items such as fanny packs, shoulder packs, and the like. By providing a bra with multiple storage pockets positioned at different locations, the wearer can not only store a number of items but can choose which location best suits her needs.

In exemplary aspects, the pockets are constructed by forming the different portions of the bra (e.g., front portion, back portion, side portions, and underband portion) from two or more layers of material and selectively attaching the layers along their perimeter edges to define pocket spaces between the layers of material. Low-profile openings to the pocket spaces are formed by not attaching the layers of material at one or more locations along their perimeter edges. In other words, areas where the perimeter edges of the layers of material are unaffixed to each other comprise openings in communication with the pocket spaces. This construction method may be used to form pockets in the front portion of the bra, the back portion of the bra, the side portions of the bra, as well as the underband portion of the bra. Moreover, by configuring the pocket spaces between the layers of the bra, and by forming the pocket openings along the perimeter edges of the different bra portions, the pockets are generally low profile and are less of a distraction to the wearer. As well, they provide a cleaner aesthetic to the bra.

Accordingly, aspects herein are directed to a bra comprising a front portion, a back portion, and a pair of side portions, where the pair of side portions connect the front portion and the back portion of the bra. The bra further comprises an underband portion extending from a lower margin of the front portion, the back portion, and the pair of side portions of the bra, where the underband portion comprises at least a first layer of material and a second layer of material positioned adjacent and external to the first layer of material. As well, the bra comprises a first pocket space formed between the first layer of material and the second layer of material of the underband portion.

In another aspect, a bra is provided comprising a front portion, and a back portion. The back portion comprises a first layer of material having a superior edge forming an upper margin of the back portion and an inferior edge forming a lower margin of the back portion, a second layer of material positioned adjacent and external to the first layer of material to form a first pocket space, where the second layer of material has a superior edge and an inferior edge. The inferior edge of the second layer of material is affixed to the first layer of material, and the superior edge of the second layer of material is unaffixed along at least a portion of its length to the first panel to form a first pocket opening communicating with the first pocket space. The back portion further comprises a third layer of material positioned adjacent and external to the first layer of material to form a second pocket space. The third layer of material has a superior edge generally coincident with the inferior edge of the second layer of material and an inferior edge generally coincident with the inferior edge of the first layer of material. The inferior edge of the third layer of material is affixed to the first layer of material, and the superior edge of the third layer of material is unaffixed along at least a portion of its length to the first layer of material to form a second pocket opening in communication with the second pocket space. The bra further comprises a pair of side portions, where the pair of side portions connect the front portion and the back portion of the bra.

In yet another aspect, a bra is provided comprising a front portion, and a back portion. The back portion comprises at least a first layer of material having a superior edge forming an upper margin of the back portion and an inferior edge

forming a lower margin of the back portion, a second layer of material positioned adjacent and external to the first layer of material to form a first pocket space, and a third layer of material positioned adjacent and external to the first layer of material to form a second pocket space. The bra further comprises a pair of side portions, where the pair of side portions connect the front portion and the back portion of the bra, and an underband portion extending from a lower margin of the front portion, the back portion, and the pair of side portions of the bra. The underband portion comprises at least a first layer of material and a second layer of material positioned adjacent and external to the first layer of material. A third pocket space is formed between the first layer of material and the second layer of material of the underband portion.

Although the term "bra" is used herein, it is contemplated that the term "bra" may apply to other types of support garments such as tank tops, camisoles with built-in support, swimming suit tops, body suits, and other styles or types of support garments used to support breast tissue. Further, positional terms used herein such as "superior," "inferior," "medial," "lateral," "upper," "lower," "side," "front," "back," and the like are to be given their common anatomical meaning with respect to the bra being worn by a hypothetical wearer standing in anatomical position. Further, the term "breast contacting surface" is meant to encompass any type of structure that is in contact with the wearer's breasts. For instance, each breast contacting surface may comprise a breast cup such as a molded cup, or an unmolded cup. The breast contacting surfaces may comprise separate distinct components with each contacting surface configured to cover or encapsulate a separate breast, or the breast contacting surfaces may comprise a unitary or continuous band of material that makes contact with both of the wearer's breasts. Any and all aspects, and any variation thereof, are contemplated as being within aspects herein. Still further, the phrase "configured to contact," when describing different portions of the bra in relation to a wearer refers to a bra appropriately sized for the particular wearer.

Turning now to FIGS. **1** and **2**, front and back views respectively of an exemplary bra **100** having storage pockets are shown in accordance with aspects herein. In exemplary aspects, the bra **100** comprises a front portion **110**, a back portion **112**, side portions **114/115**, an underband portion **116**, and shoulder straps **118/119**. In one aspect, the different portions **110**, **112**, **114/115**, **116**, and **118/119** may comprise separate constructions that are joined together at one or more seam lines using affixing technologies such as stitching, bonding, welding, adhesives, and the like. In other aspects, the different portions **110**, **112**, **114/115**, **116**, and **118/119** may comprise integral extensions of one another. For instance, a knitting or weaving process may be used to seamlessly and integrally knit or weave the different portions **110**, **112**, **114/115**, **116**, and **118/119** to form the bra **100**. In yet another aspect, one or more of the portions **110**, **112**, **114/115**, **116**, or **118/119** may be seamlessly and integrally knit or woven with another portion while remaining portions may comprise separate constructions that are joined to the integrally knit or woven portions using affixing technologies described herein. Any and all aspects, and any variation thereof, are contemplated as being within aspects herein.

Turning first to the front portion **110**, the front portion **110** is configured to contact at least a wearer's breasts when the bra **100** is in an as-worn configuration. In exemplary aspects, the front portion **110** may comprise a first breast contacting surface **120**, a second breast contacting surface **122**, and a central portion **124** positioned between the first and second breast contacting surfaces **120** and **122**. The front portion **110** further comprises at least an upper margin **126**, a lower margin **128**, and side margins **130** and **132**. The front portion **110** may be formed from one or materials configured to provide at least a moderate amount of compression to help support the wearer's breasts.

The back portion **112** is configured to contact at least a portion of the wearer's back torso when the bra **100** is in the as-worn configuration. In exemplary aspects, the back portion **112** may comprise a "racerback" style having at least an upper margin **210**, a lower margin **212**, and side margins **214** and **216**. The back portion **112** may be formed, in exemplary aspects, of a mesh material to provide breathability and air permeability to the bra **100** although uses of other types of materials are contemplated herein.

The bra further comprises side portions **114/115** configured to extend around the side torso areas of a wearer when the bra **100** is in the as-worn configuration. The side portions **114/115** connect the front portion **110** to the back portion **112** of the bra **100** around the torso of the wearer when the bra **100** is worn. More specifically, in exemplary aspects, the side portion **114** may be affixed to the front portion **110** at the side margin **130** of the front portion **110** and to the back portion **112** at the side margin **216** of the back portion **112**. Continuing, the side portion **115** may be affixed to the front portion **110** at the side margin **132** of the front portion **110** and to the back portion **112** at the side margin **214** of the back portion **112**. Thus, in some aspects, the margins **130**, **132**, **214**, and **216** may comprise "seam lines," "seams," or areas where two or more panels of material are joined together using affixing technologies described herein. However, it is also contemplated herein that when the front portion **110**, side portions **114/115** and back portion **112** comprise integrally knit or woven extensions of each other, the different margins **130**, **132**, **214**, and **216** may comprise lines of demarcation between the different portions created via a knitting process, a weaving process, and the like. In other words, the different margins **130**, **132**, **214**, and **216** may comprise areas where two or more layers of material are joined together via a knitting process, a weaving process, and the like, to create boundaries for the various pockets described herein. Any and all aspects, and any variation thereof, are contemplated as being within aspects herein.

Continuing, the side portions **114/115** may each comprise an upper margin **133** and a lower margin **135**. In exemplary aspects, some or all of the side portions **114/115** may be formed of a mesh material to provide breathability and air permeability to the bra **100** although uses of other types of materials are contemplated herein.

The shoulder straps **118/119** of the bra **100** are configured to extend over the shoulder areas of the wearer when the bra **100** is in the as-worn configuration. However, it is also contemplated herein that the shoulder straps **118/119** may be optional. When not used, the bra **100** would assume a bandeau style garment. When used, the shoulder straps **118/119** also help to connect the front portion **110** to the back portion **112**. More particularly, in exemplary aspects, the shoulder strap **118** may be affixed to the front portion **110** at seam line **134** and to the back portion **112** at seam line **220**, and the shoulder strap **119** may be affixed to the front portion **110** at the seam line **136** and to the back portion **112** at seam line **218**. However, it is also contemplated herein that the shoulder straps **118/119** may comprise integrally knit or woven extensions of the front portion **110** and/or the back portion **112**. In this instance, the seam lines **134**, **136**, **218**, and **220** may comprise lines of demarcation between the

different portions of the bra **100** created via, for instance, a knitting or weaving process. Any and all aspects, and any variation thereof, are contemplated as being within aspects herein.

Further, in exemplary aspects, the shoulder straps **118/119** may be formed of a low-stretch material so as to provide further support to the wearer's breasts when the bra **100** is in the as-worn configuration. Additionally, in an exemplary aspects, the shoulder straps **118/119** may optionally comprise a first loop **138** positioned on the shoulder strap **118** and/or a second loop **139** positioned on the second shoulder strap **119**. The first and second loops **138/139** may be formed from the same material or a different material from that used to form the shoulder straps **118/119** and may be used to secure, for instance, straws for water bladders, or wires for headphones.

The bra **100** additionally comprises the underband portion **116**, where the underband portion **116** is configured to extend circumferentially around the torso area of the wearer when the bra **100** is in the as-worn configuration. In exemplary aspects, the underband portion **116** extends from the lower margin **128** of the front portion **110**, the lower margins **135** of the side portions **114/115**, and the lower margin **212** of the back portion **112**. The underband portion **116** comprises an upper margin **140** and a lower margin **142**. In exemplary aspects, the underband portion **116** may be formed from the same material used to form, for instance the front portion **110**. The material may exhibit some degree of elastic resilience to help tension the underband portion **116** against the torso of a wearer when the bra **100** is worn. In some aspects, an additional elastically resilient band may be used in the underband portion **116** to provide further tensioning when the bra **100** is worn.

The bra **100** comprises a number of different storage pockets in accordance with aspects herein. For instance, with respect to FIG. **1**, the bra **100** may comprise pocket **150** having an opening **151** positioned at the upper margin **140** of the underband portion **116**. In exemplary aspects, the opening **151** to the pocket **150** may be positioned generally inferior to the central portion **124** of the front portion **110**. In other words, the opening **151** may be generally vertically aligned with the central portion **124** of the bra **100**. The opening **151** may comprise a first end **152** and a second end **153** that define the length of the opening **151**.

Still referring to FIG. **1**, the bra **100** may comprise pocket **154** having an opening **155** positioned adjacent to the upper margin **126** of the front portion **110**. In exemplary aspects, the opening **155** may extend the length of the upper margin **126** of the front portion **110** to provide the wearer with easy access to the storage pocket **154**. Continuing, and with respect to FIGS. **1** and **2**, the bra **100** further comprises pocket **156** located at side portion **114** and pocket **158** located at side portion **115**. The pocket **156** comprises opening **157** positioned at the upper margin **133** of side portion **114**, and the pocket **158** comprises opening **159** at the upper margin **133** of side portion **115**. In exemplary aspects, the openings **157** and **159** may extend along the length of the upper margin **133** of side portions **114** and **115**. Further, it is contemplated herein, that the bra **100** may comprise just one of the pockets **156** and/or **158** or both the pockets **156** and **158**. Any and all aspects, and any variation thereof, are contemplated as being within aspects herein.

The bra **100** may additionally comprise pocket **222** having an opening **223** located on the back portion **112** of the bra **100**. The opening **223** may be offset from and inferior to the upper margin **210** of the back portion **112**. Additionally, the back portion **112** may comprise a second pocket **224** having an opening **225**. The opening **225** to the second pocket **224** may be offset from and inferior to the opening **223** of the pocket **222**. In exemplary aspects, both the opening **223** and the opening **225** may extend across the width of the back portion **112**. The various openings **151**, **155**, **157**, **159**, **223**, and **225** to the pockets **150**, **154**, **156**, **158**, **222**, and **224** described herein may be reinforced with, for example, seam tape, elasticized tape, piping, additional fabric, and the like to facilitate enhanced durability of the bra **100** through repeated use of the various pockets **150**, **154**, **156**, **158**, **222**, and **224**.

The pockets **150**, **154**, **156**, **158**, **222**, and **224** and their associated openings **151**, **155**, **157**, **159**, **223**, and **225** are strategically located to provide the wearer of the bra **100** with different placement options for stowing items in accordance with preferences of the wearer. Moreover, the size of the pockets **150**, **154**, **156**, **158**, **222**, and **224** and their associated openings **151**, **155**, **157**, **159**, **223**, and **225** are configured to vary in size to provide secure storage for different sized items. Some examples of different use configurations are shown in FIGS. **3-6**. FIGS. **3-4** depict front views of the bra **100** being worn by a wearer in accordance with aspects herein. With respect to FIG. **3**, an item **310**, in the form of an identification card, is shown as being stowed within the pocket **150**. FIG. **4** illustrates an item **410**, in the form of a cell phone, being stowed within the pocket **154**, and an item **412**, in the form of a set of keys, also being stowed within the pocket **154**.

FIG. **5** depicts a side view of the bra **100** being worn. An item **510**, in the form of ear buds, is shown being stowed in the pocket **158**. FIG. **6**, which depicts a back view of the bra **100** being worn by the wearer, illustrates an item **610**, in the form of a water bottle, being stowed in the pocket **222**, and an item **612**, in the form of money, being stowed in the second pocket **224**. The items shown in FIGS. **3-6** are exemplary only and are provided to illustrate the different uses of the pockets **150**, **154**, **156**, **158**, **222**, and **224**. Other types of stowable items are contemplated as being within the scope herein.

Turning now to FIG. **7**, an exploded view of the front portion **110** of the bra **100** is provided in accordance with aspects herein. As discussed above, the various pockets of the bra **100** are constructed by forming the different portions of the bra **100** of two or more layers of material. The pocket space is formed between the layers of material, and an opening to the pocket space is formed by discontinuously affixing the perimeter edges of the different portions at select areas. With respect to FIG. **7**, the front portion **110** comprises at least a first layer of material **710** and a second layer of material **712**. The first layer of material **710** is defined by at least perimeter edges **714**, **716**, **718**, and **720**. Perimeter edges **714** and **716** oppose each other and help to define the side margins **130** and **132** of the front portion **110** respectively. Perimeter edges **718** and **720** also oppose each other. Perimeter edge **718** helps to define the lower margin **128** of the front portion **110**, and perimeter edge **720** helps to define the upper margin **126** of the front portion **110**.

The second layer of material **712** is configured to be positioned adjacent and external to the first layer of material **710** when the bra **100** is assembled such that respective surfaces of each are positioned adjacent to each other. The second layer of material **712** is defined by at least perimeter edges **722**, **724**, **726**, and **728**. Perimeter edges **722** and **724** oppose each other and further help to define the side margins **130** and **132** of the front portion **110** respectively. Perimeter edges **726** and **728** also oppose each other. Perimeter edge **726** further helps to define the lower margin **128** of the front

portion **110**, and perimeter edge **728** further helps to define the upper margin **126** of the front portion **110**.

When assembled, the perimeter edge **722** of the second layer of material **712** may be affixed to the perimeter edge **714** of the first layer of material **710** along their respective lengths using affixing technologies known in the art (e.g., stitching, bonding, adhesives, and the like). When the different bra portions comprise integrally knit or woven extensions of each other, the perimeter edge **722** and the perimeter edge **714** may be more accurately described as boundaries, where the boundaries are integrally knit or woven to each other along their respective lengths to define the boundaries of the different pocket spaces. Thus, as used herein, the term "affixing" may also mean integrally knitting or weaving one or more perimeter edges or boundaries to each other to create lines of demarcation between the different bra portions and to define boundaries for the different pockets described herein.

Continuing, the perimeter edge **724** may be affixed to the perimeter edge **716** of the first layer of material **710** along their respective lengths, and the perimeter edge **726** of the second layer of material **712** may be affixed to the perimeter edge **718** of the first layer of material **710** along their respective lengths. The pocket **154** is formed between the two layers of material **710/712**. As such, the pocket **154** extends without interruption between the two layers of material **710/712** forming the front portion **110**. To put it another way, the pocket **154** extends without interruption between the two layers of material **710/712** from the side margin **130** to the side margin **132**. The opening **155** to the pocket **154** is formed by not affixing the perimeter edge **720** of the first layer of material **710** to the perimeter edge **728** of the second layer of material **712** along their respective lengths. This construction provides a large opening and easy access to the pocket **154**. However, it is contemplated herein, that at least a portion of the perimeter edge **720** may be affixed to at least a portion of the perimeter edge **728** to provide a smaller opening **155** to the pocket **154**. Any and all aspects, and any variation thereof, are contemplated as being within aspects herein.

With respect to FIG. **8**, an exploded view of the back portion **112** is illustrated in accordance with aspects herein. More specifically, FIG. **8** is provided to illustrate how the pocket **222** is formed. The back portion **112** comprises a first layer of material **810**, which may be an elastically resilient mesh material for air permeability and breathability that is defined by at least perimeter edges **812**, **814**, **816**, **818**, **820**, and **822**. The perimeter edge **812** comprises the upper margin **210** of the back portion **112**, while the perimeter edge **814** comprises the lower margin **212** of the back portion **112**. The perimeter edges **816** and **818** comprise the side margins **214** and **216** of the back portion **112**. The perimeter edges **820** and **822** help to form or define the armholes of the bra **100**.

The pocket **222** is formed by positioning a second layer of material **824**, which may be an elastically resilient mesh material, adjacent and external to the first layer of material **810** such that the respective surfaces of each are adjacent to each other to define a pocket space therebetween. The second layer of material **824** is defined by perimeter edges **826**, **828**, **830** and **832**. The perimeter edges **826** and **828** oppose each other and define side margins of the second layer of material **824**. The perimeter edge **830** defines a lower margin of the second layer of material **824**, and the perimeter edge **832**, which opposes the perimeter edge **830**, defines an upper margin of the second layer of material **824**. When assembled, the perimeter edges **826** and **828** of the second layer of material **824** are affixed to an upper portion of the perimeter edges **820** and **822** of the first layer of material **810** along their respective lengths, and the perimeter edge **830** of the second layer of material **824** is affixed to the first layer of material **810** along its respective length at a location approximately one-third the distance from the perimeter edge **812** to the perimeter edge **814** as measured with respect to the perimeter edge **812**. To form the opening **223**, the perimeter edge **832** of the second layer of material **824** is not affixed (or is unaffixed) to the first layer of material **810** to provide access to the pocket **222**. When assembled, the opening **223** is offset from or spaced apart from the upper margin **210** of the back portion **112** by a distance of approximately 1 cm, 2 cm, 3 cm, up to 10 cm.

Turning now to FIG. **9**, a second exploded view of the back portion **112** is provided in accordance with aspects herein. More specifically, FIG. **9** is provided to illustrate how the second pocket **224** is formed. The first layer of material **810** is shown with its perimeter edges **812**, **814**, **816**, **818**, **820**, and **822**. A third layer of material **910**, which may be an elastically resilient mesh material, is also shown, where the third layer of material **910** is defined by at least perimeter edges **912**, **914**, **916**, and **918**. The perimeter edges **912** and **914** generally oppose each other and define side margins of the third layer of material **910**. The perimeter edge **916** comprises a lower margin of the third layer of material **910**, and the perimeter edge **918** comprises an upper margin of the third layer of material **910**.

The second pocket **224** is formed by positioning the third layer of material **910** adjacent and external to the first layer of material **810** such that the respective surfaces of each are adjacent to each other to define a pocket space therebetween. When assembled, the perimeter edges **912** and **914** of the third layer of material **910** are affixed the first layer of material **810** along their respective lengths, and the perimeter edge **916** of the third layer of material **910** is affixed to the perimeter edge **814** of the first layer of material **810** along its respective length. To form the opening **225**, the perimeter edge **918** of the third layer of material **910** is not affixed (or is unaffixed) to the first layer of material **810** to provide access to the second pocket **224**.

It is contemplated herein that the perimeter edge **830** of the second layer of material **824** is coincident with, or aligned with, the perimeter edge **918** of the third layer of material **910** such that the opening **225** is generally aligned with the perimeter edge **830** of the second layer of material **824**. To describe it another way, it is contemplated herein that the second layer of material **824** does not substantially overlap with the third layer of material **910** such that the pocket **222** does not significantly overlap with the second pocket **224**. This holds true even though at least one edge of the pocket **222** may align with at least one edge of the second pocket **224**. This construction allows for two distinct pocket spaces with separate access to each so that a wearer can separately stow items in the pockets **222** and **224** with unnecessary interference between the pockets **222** and **224**.

FIG. **10** illustrates an exploded view of the side portion **114** of the bra **100** in accordance with aspects herein. The description of FIG. **10** would be equally applicable to the side portion **115** of the bra **100**. FIG. **10** is specifically provided to illustrate how the pocket **156** is formed. The side portion **114** comprises a first layer of material **1010** and a second layer of material **1012**. In exemplary aspects, both the first layer of material **1010** and the second layer of material **1012** may comprise an elastically resilient mesh material for breathability and air permeability. It is also contemplated herein that just the second layer of material

1012 may comprise an elastically resilient mesh material, or just the first layer of material 1010 may comprise an elastically resilient mesh material. The first layer of material 1010 is defined by perimeter edges 1014, 1016, 1018, and 1020. The perimeter edges 1014 and 1016 oppose each other and define front and back margins respectively when the side portion 114 is incorporated into the bra 100. The perimeter edge 1020 comprises at least in part the upper margin 133 of the side portion 114, and the perimeter edge 1022 comprises at least in part the lower margin 135 of the side portion 114 of the bra 100.

The second layer of material 1012 is defined by perimeter edges 1022, 1024, 1026, and 1028. The perimeter edges 1022 and 1024 oppose each other and define front and back margins respectively when the side portion 114 is incorporated into the bra 100. The perimeter edge 1028 comprises at least in part the upper margin 133 of the side portion 114, and the perimeter edge 1026 comprises at least in part the lower margin 135 of the side portion 114 of the bra 100.

To form the pocket 156, the second layer of material 1012 is positioned adjacent and external to the first layer of material 1010 such that their respective surfaces are positioned adjacent to each other to define a pocket space therebetween. When assembled, the perimeter edge 1022 of the second layer of material 1012 is affixed along its length to the perimeter edge 1014 of the first layer of material 1010. It is further contemplated herein, that the perimeter edges 1014 and 1022 are affixed to the perimeter edges 714 and 722 of the first and second layers 710/712 of the front portion 110 to form side margin 130. Similarly, the perimeter edge 1024 of the second layer of material 1012 is affixed along its length to the perimeter edge 1016 of the first layer of material 1010. It is further contemplated herein, that the perimeter edges 1016 and 1024 are affixed to the perimeter edge 818 of the first layer of material 810 of the back portion 112 to form side margin 216.

Continuing, when assembled, the aperimeter edge 1026 of the second layer of material 1012 is affixed along its length to the perimeter edge 1018 of the first layer of material 1010. To form the opening 157 to the pocket 156, the perimeter edge 1028 of the second layer of material 1012 is not affixed (or is unaffixed) to the perimeter edge 1020 of the first layer of material 1010 along its length to provide access to the pocket 156.

FIG. 11A and FIG. 11B illustrate an exemplary construction for the underband portion 116 of the bra 100 in accordance with aspects herein. FIG. 11A illustrates a layer of material 1100 in an unfolded state. The layer of material 1100 may be defined by perimeter edge 1110, perimeter edge 1112, and perimeter edges 1114 and 1116. The layer of material 1100 may be bisected along its length by a hypothetical fold line 1118. As illustrated in FIG. 11B, to assemble the underband portion 116 and to form the pocket 150, the layer of material 1100 may be folded along the hypothetical fold line 1118 such that the perimeter edge 1112 is aligned with or is coincident with the perimeter edge 1110. The perimeter edge 1112 may then be discontinuously affixed to the perimeter edge 1110 as indicated by the arrows (i.e., the arrows represent areas where the edges 1110 and 1112 are affixed.) The area where the perimeters edges 1110 and 1112 are not affixed (or unaffixed) comprises the opening 151 to the pocket 150. Reference numerals 152 and 153 denote the boundaries of the opening 151. It is contemplated herein, that the opening 151 may extend along a greater length of the underband portion 116 than shown. It is also contemplated herein, that more than one opening may be formed by discontinuously affixing the perimeter edges 1110 and 1112 at other pre-selected areas. Any and all aspects, and any variation thereof, are contemplated as being within aspects herein.

To affix the underband portion 116 to the bra 100, the perimeter edge 1110 may be affixed along its length to the lower margin 128 of the front portion 110, the lower margins 135 of the side portions 114 and 115, and the lower margin 212 of the back portion 112. However, to maintain the opening 151 to the pocket 150, the perimeter edge 1112 may be continuously affixed to the lower margins 135 of the side portions 114 and 115 and to the lower margin 212 of the back portion 112 but be discontinuously affixed to the lower margin 128 of the front portion 110. In other words, the perimeter edge 1112 may not be affixed (or unaffixed) to the lower margin 128 of the front portion 110 where the opening 151 is desired to be maintained.

This aspect is shown in FIGS. 12 and 13, where FIG. 12 represents a cross-sectional view taken along cut line 12-12 of FIG. 1, and FIG. 13 represents a cross-sectional view taken along cut line 13-13 of FIG. 1 in accordance with aspects herein. With respect to FIG. 12, the perimeter edges 1110 and 1112 of the layer of material 1100 forming the underband portion 116 are both shown being affixed to the perimeter edges 1018 and 1026 of the first and second layers of material 1010 and 1012 respectively of the side portion 114. FIG. 12 further illustrates the pocket 158 formed between the layers of material 1010/1012 in the side portion 114, and the pocket 150 formed when the layer of material 1100 is folded to form the underband portion 116. In exemplary aspects, the pocket 150 may be configured to extend around the circumference of the underband portion 116.

With respect to FIG. 13, the cross-sectional view is taken along the front portion 110 of the bra 100 in an area corresponding to the central portion 124 between the breast contacting surfaces 120 and 122. In this view, just the perimeter edge 1110 of the layer of material 1100 forming the underband portion 116 is affixed to the first and second layers of material 710/712 of the front portion 110 via the perimeter edges 718 and 726 of the layers 710/712. The perimeter edge 1112 of the layer of material 1100 is unaffixed to form the opening 151 to the pocket 150. FIG. 13 further illustrates the pocket 154 formed between the first and second layers of material 710/712 forming the front portion 110.

Returning to FIG. 11B, as mentioned, the layer of material 1100 forming the underband portion 116 may comprise an elastically resilient material. To augment the elastic nature of the underband portion 116 an optional elastically resilient band 1120 may be positioned in the pocket 150 adjacent the lower margin 142 of the underband portion 116 (although other locations are contemplated herein).

With continued respect to the underband portion 116, although described as being formed from a layer of material that is folded along a hypothetical fold line, it is also contemplated herein, that the underband portion 116 may be formed from two or more layers of material that are joined together along their perimeter edges. Any and all aspects, and any variation thereof, are contemplated as being within aspects herein.

Aspects of the present disclosure have been described with the intent to be illustrative rather than restrictive. Alternative aspects will become apparent to those skilled in the art that do not depart from its scope. A skilled artisan may develop alternative means of implementing the aforementioned improvements without departing from the scope of the present invention.

It will be understood that certain features and subcombinations are of utility and may be employed without reference to other features and subcombinations and are contemplated within the scope of the claims. Not all steps listed in the various figures need be carried out in the specific order described.

What is claimed is:

1. A bra comprising:

a front portion;

a back portion;

a pair of side portions connecting the front portion and the back portion of the bra;

an underband portion extending from a lower margin of the front portion, the back portion, and the pair of side portions of the bra, the underband portion comprising at least a first layer of material and a second layer of material positioned adjacent and external to the first layer of material; and

a first pocket space formed between the first layer of material and the second layer of material of the underband portion, wherein an upper edge of the second layer of material is continuously affixed to an upper edge of the first layer of material except for at a first area at a front aspect of the bra to form a pocket opening to the first pocket space.

2. The bra of claim **1**, wherein the upper edge of the first layer of material is continuously affixed to the lower margin of the front portion, the back portion, and the pair of side portions, and wherein the upper edge of the second layer of material is continuously affixed to the lower margin of the front portion, the back portion, and the pair of side portions except for at the first area where the upper edge of the second layer of material is unaffixed to the lower margin of the front portion.

3. The bra of claim **1**, wherein the front portion comprises at least a first breast contacting surface, a second breast contacting surface, and a central portion interposed between the first breast contacting surface and the second breast contacting surface.

4. The bra of claim **3**, wherein the opening to the first pocket space is positioned generally inferior to the central portion.

5. The bra of claim **1**, wherein the first pocket space extends along a length of the underband portion.

6. The bra of claim **1**, wherein the first pocket space extends along a portion of a length of the underband portion.

7. A bra comprising:

a front portion;

a back portion comprising:

a first layer of material having a superior perimeter edge forming an upper margin of the back portion and an inferior perimeter edge forming a lower margin of the back portion,

a second layer of material positioned adjacent and external to the first layer of material to form a first pocket space, the second layer of material having at least a superior perimeter edge and an inferior perimeter edge, wherein the inferior perimeter edge of the second layer of material is affixed to the first layer of material, and wherein the superior perimeter edge of the second layer of material is unaffixed from the first layer of material along at least a portion of a length of the superior perimeter edge of the second layer of material to form a first pocket opening in communication with the first pocket space, and

a third layer of material positioned adjacent and external to the first layer of material to form a second pocket space, the third layer of material having at least a superior perimeter edge generally coincident with the inferior perimeter edge of the second layer of material and an inferior perimeter edge generally coincident with the inferior perimeter edge of the first layer of material, wherein the inferior perimeter edge of the third layer of material is affixed to the first layer of material, and wherein the superior perimeter edge of the third layer of material is unaffixed from the first layer of material along at least a portion of a length of the superior perimeter edge of the third layer of material to form a second pocket opening in communication with the second pocket space; and

a pair of side portions connecting the front portion and the back portion of the bra.

8. The bra of claim **7**, wherein one or more of the first layer of material, the second layer of material, and the third layer of material comprises a mesh material.

9. The bra of claim **7**, wherein the first pocket opening is linear and the second pocket opening is linear, and wherein the first pocket opening is in parallel alignment with the second pocket opening.

10. The bra of claim **7**, wherein the front portion comprises a first layer of material and a second layer of material positioned adjacent and external to the first layer of material to form a third pocket space that extends continuously and without interruption across the front portion of the bra.

11. The bra of claim **10**, wherein the first layer of material of the front portion is defined by a first plurality of perimeter edges, and wherein the second layer of material of the front portion is defined by a second plurality of perimeter edges.

12. The bra of claim **11**, wherein the second plurality of perimeter edges of the second layer of material of the front portion are continuously affixed to the first plurality of perimeter edges of the first layer of material of the front portion except for at least a first area where a perimeter edge of the second layer of material of the front portion is unaffixed to a perimeter edge of the first layer of material of the front portion to define a third pocket opening in communication with the third pocket space.

13. The bra of claim **12**, wherein the third pocket opening is positioned at an upper margin of the front portion.

14. A bra comprising:

a front portion;

a back portion comprising at least:

a first layer of material having a superior perimeter edge forming an upper margin of the back portion and an inferior perimeter edge forming a lower margin of the back portion,

a second layer of material positioned adjacent and external to the first layer of material to form a first pocket space, and

a third layer of material positioned adjacent and external to the first layer of material to form a second pocket space;

a pair of side portions connecting the front portion and the back portion of the bra;

an underband portion extending from a lower margin of the front portion, the back portion, and the pair of side portions of the bra, the underband portion comprising at least a first layer of material and a second layer of material positioned adjacent and external to the first layer of material; and

a third pocket space formed between the first layer of material and the second layer of material of the underband portion.

15. The bra of claim **14**, further comprising a first pocket opening in communication with the first pocket space, a second pocket opening in communication with the second pocket space, and a third pocket opening in communication with the third pocket space.

16. The bra of claim **14**, wherein each side portion of the pair of side portions comprises a first layer of material and a second layer of material positioned adjacent and external to the first layer of material to form a fourth and fifth pocket space respectively.

17. The bra of claim **16**, wherein the second layer of material of the each side portion is continuously affixed to the first layer of material of the each side portion along their respective perimeter edges except for a first area where the perimeter edge of the second layer of material is unaffixed to the perimeter edge of the first layer of material to form fourth and fifth pocket openings in communication with the fourth and fifth pocket spaces respectively.

18. The bra of claim **17**, wherein the front portion of the bra comprises a first layer of material and a second layer of material positioned adjacent and external to the first layer of material to form a sixth pocket space extending continuously and without interruption along the front portion, and wherein the front portion of the bra comprises a sixth pocket opening in communication with the sixth pocket space.

* * * * *