US 20110244758A1

(19) United States

(12) Patent Application Publication

Boatright et al.

(10) Pub. No.: US 2011/0244758 A1

(43) Pub. Date: Oct. 6, 2011

(54) BRA WITH STORAGE POCKET

(76) Inventors: **Jeffrey S. Boatright**, North Las Vegas, NV (US); **Sheila Lombard**, North Las Vegas, NV (US)

(21) Appl. No.: **13/074,302**

(22) Filed: **Mar. 29, 2011**

Related U.S. Application Data

(60) Provisional application No. 61/318,962, filed on Mar. 30, 2010.

Publication Classification

(51) **Int. Cl.**
A41C 3/12 (2006.01)
A41C 5/00 (2006.01)

(52) **U.S. Cl.** **450/89**; 450/92

(57) **ABSTRACT**

A bra with a storage pocket provides secure storage compartment provides secure storage for various items, while eliminating the need to hand carry such items, or to utilize bags or other carrying mechanism. The bra herein gives storage capabilities to a wide variety of apparel thus increasing convenience for its users. The bra may comprise one or multiple storage pockets. Such storage pockets may be formed into or at an inner lining of the bra's cups. Alternatively, one or more storage pockets may be at an outer surface of the bra. In addition, it is contemplated that the side bands of the bra may provide storage by having storage pockets.

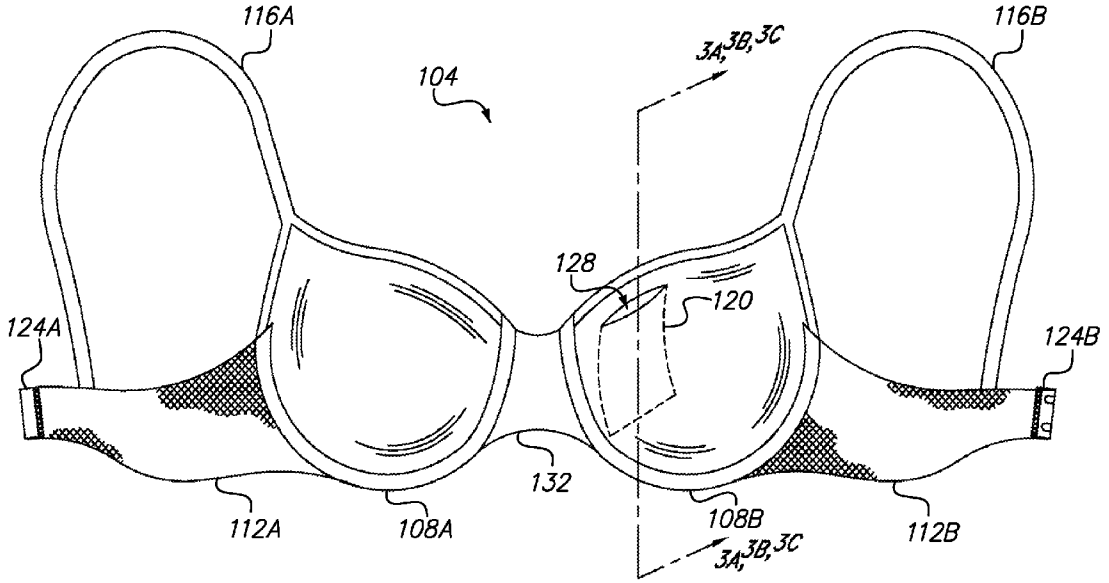

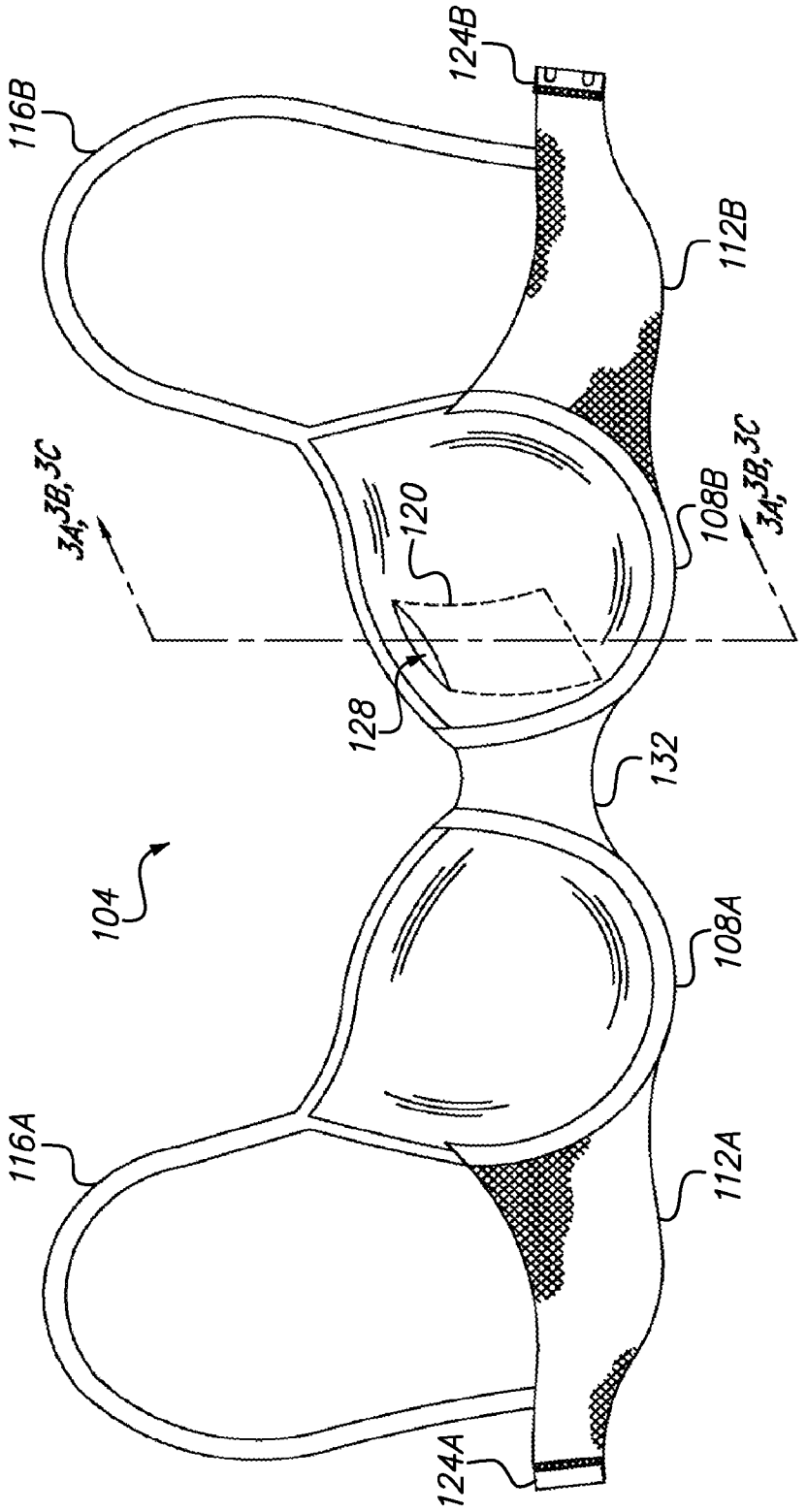
116B
124B
112B
3A,3B,3C
120
108B
3A,3B,3C
128
132
104
108A
116A
112A
124A

FIG. 1

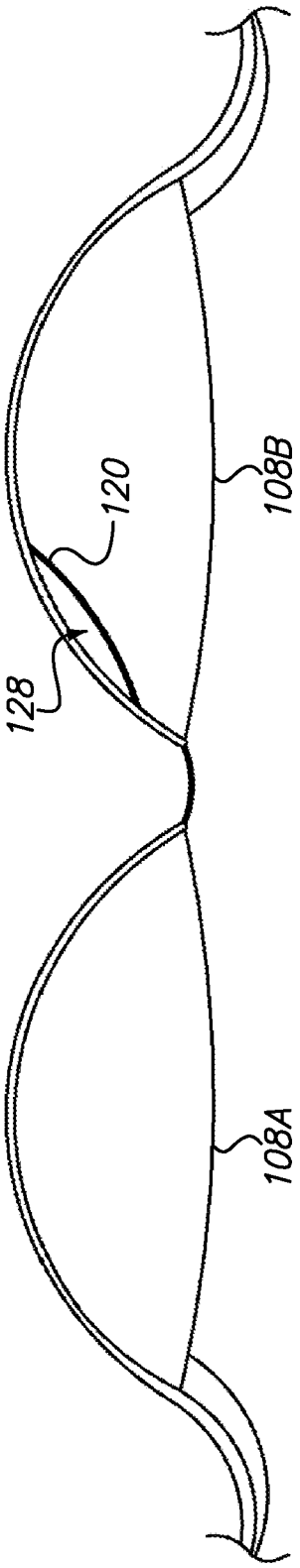

FIG. 2

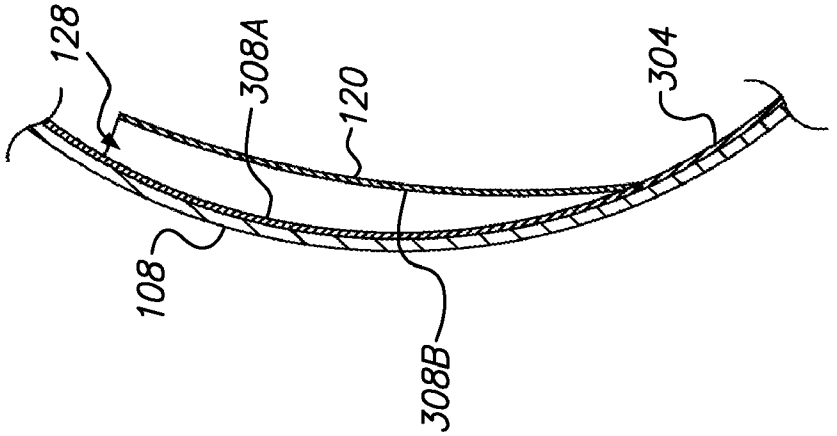

FIG. 3C

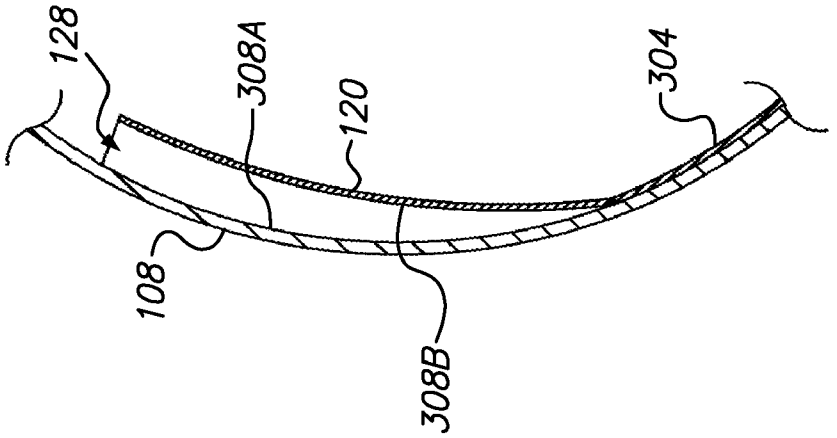

FIG. 3B

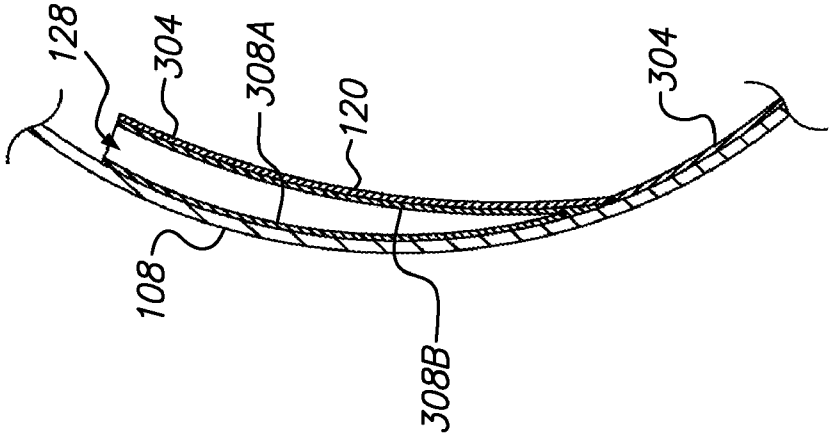

FIG. 3A

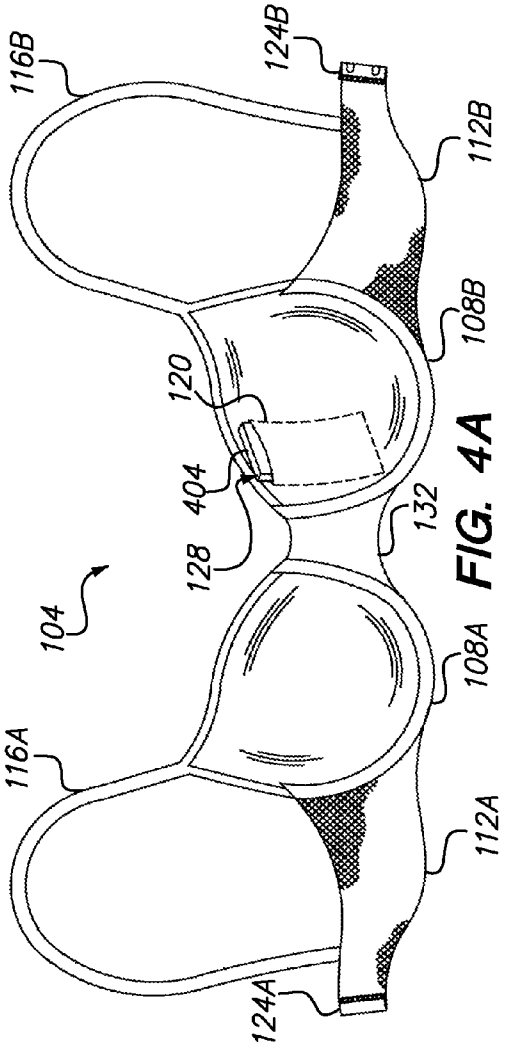
116B
124B
112B
108B
120
404
128
132
104
108A
116A
112A
124A

FIG. 4A

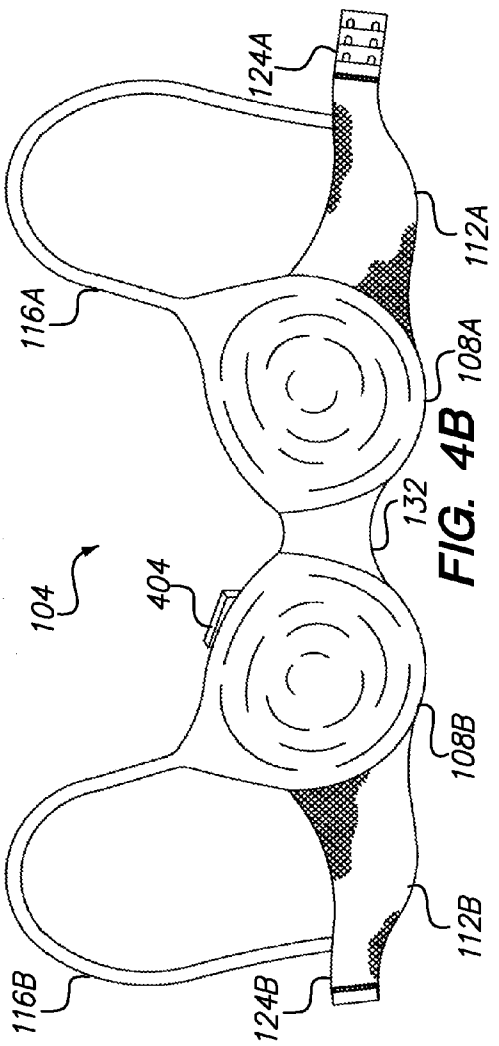
124A
112A
116A
108A
132
404
104
108B
116B
124B
112B

FIG. 4B

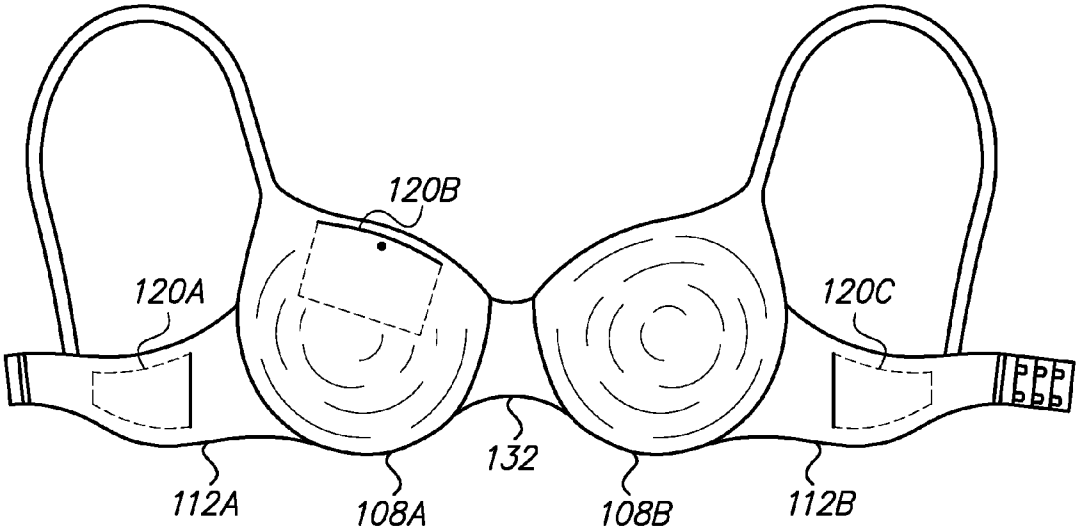
120B
120A
120C
132
112A
108A
108B
112B

FIG. 5A

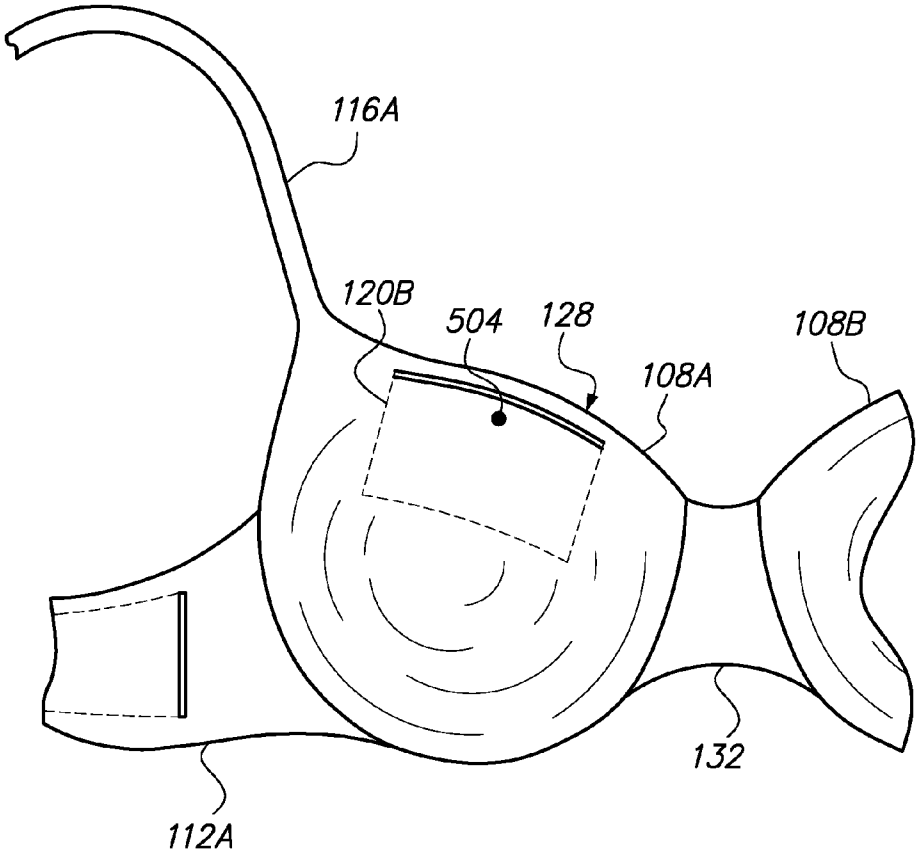
116A
120B
504
128
108B
108A
132
112A

FIG. 5B

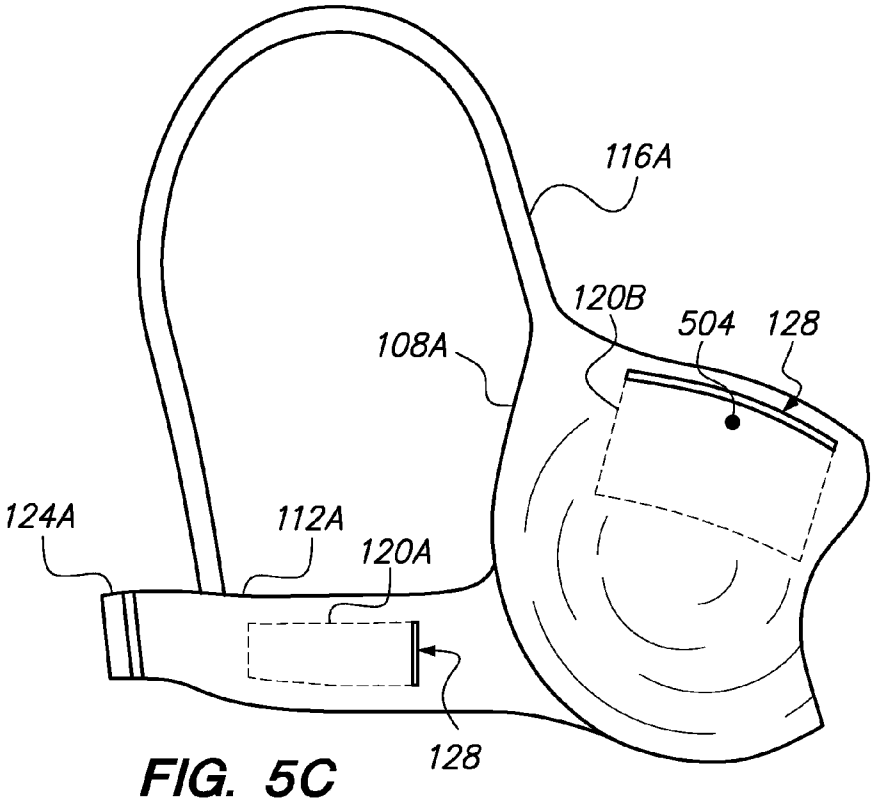
116A
120B
504
128
108A
124A
112A
120A
128

FIG. 5C

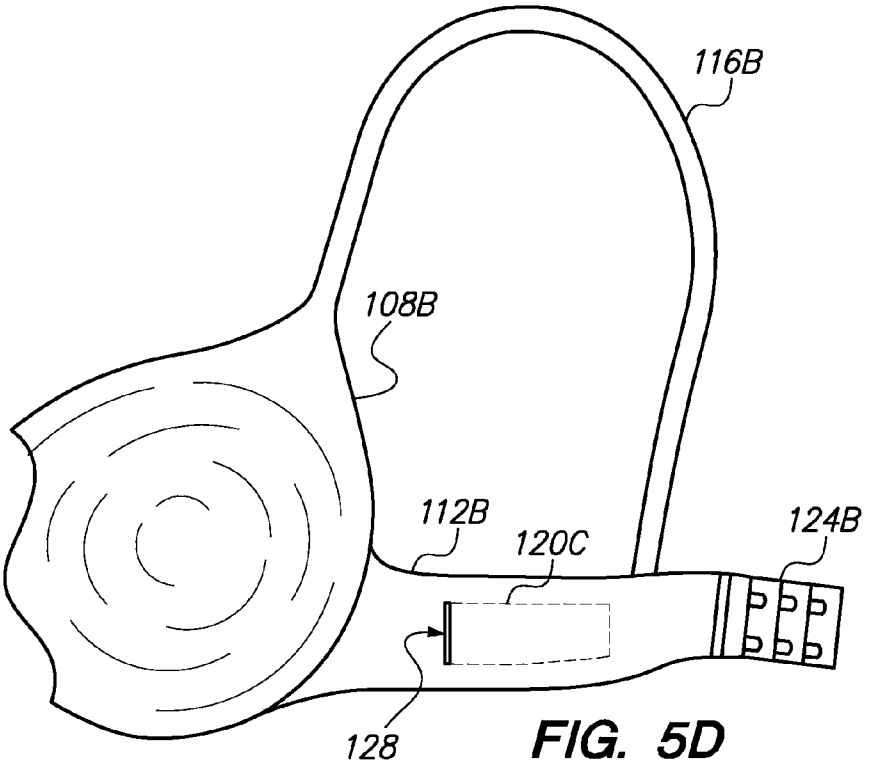
116B
108B
112B
120C
124B
128

FIG. 5D

BRA WITH STORAGE POCKET

CROSS-REFERENCE TO RELATED APPLICATION

[0001] This application claims priority to U.S. Provisional Patent Application No. 61/318,962, titled Bra Having Storage Pocket, filed Mar. 30, 2010.

BACKGROUND OF THE INVENTION

[0002] 1. Field of the Invention.

[0003] The invention relates generally to undergarments and in particular to a bra with a storage pocket for carrying items therein.

[0004] 2. Related Art.

[0005] Certain fashions as well as many formal social events make it difficult at best for women to tote personal items. Concerns of crime and identity theft make women reluctant to leave such items as cell phones and wallets unattended for any but the briefest of moments. Lacking the pockets most menswear provides, many women resort to carrying these small personal items with their hands, or decide to leave these items behind even though they may be needed. Inadvertent loss of such items may be occasioned by misplacement, dislodgment, or as a result of outright theft making such carrying strategy ill advised as a long-term solution.

[0006] A need exists for a more secure storage location for small, personal items that does not require use of a separate fashion accessory item nor one that functions as an appendage to outer clothing.

[0007] From the discussion that follows, it will become apparent that the present invention addresses the deficiencies associated with the prior art while providing numerous additional advantages and benefits not contemplated or possible with prior art constructions.

SUMMARY OF THE INVENTION

[0008] A storage bra having a pocket for storing one or more items is disclosed herein. The storage bra is highly advantage in that it reduces or eliminates the need to carry items, such as personal items (e.g., cell phones, makeup, currency, identification, credit cards, etc . . .) manually. This is highly desirable as it allows these items to be conveniently carried even when a user does not have pockets, a purse, bag, or the like.

[0009] Various embodiments of a storage bra are disclosed herein. For example, in one embodiment, a bra for storing one or more items is disclosed. Such bra may comprise a first cup and a second cup connected by a bridge, a first side band extending outward from the first cup, a second side band extending outward from the second cup, and a storage pocket at the first cup. The storage pocket may have a bottom and at least to sides, and may comprise a first wall and a second wall connected at the bottom and the at least two sides to form a compartment having an opening to removably store the items. It is noted that the first wall of the storage pocket may be formed by a portion of the first cup.

[0010] A closing mechanism may be at the opening of the storage pocket. An additional storage pocket may be at the first side band. In addition, another additional storage pocket may be at the second side band.

[0011] The first cup and second cup may have a lining Where a lining is provided, the storage pocket may be between the lining of the first cup and the first cup such that the first wall of the storage pocket is adjacent the first cup and the second wall of the storage pocket is adjacent the lining of the first cup. It is noted that the lining may be used to form the first wall of the storage pocket as well.

[0012] In another exemplary embodiment, a bra for storing one or more items may comprise a first cup, a second cup connected to the first cup, one or more straps configured to hold the first cup and second cup to a user, and a storage pocket at the first cup. The storage pocket may form a compartment having an open top for storing the items. The opening may have a closing mechanism to secure one or more items within the storage pocket. An additional storage pocket, also comprising a compartment for storing one or more items, may be at the second cup.

[0013] It is noted that the storage pocket may be attached to the first cup with one or more pieces of hook and loop material. Alternatively, the first cup may have a lining and the storage pocket may be located between the first cup's lining and the first cup. It is contemplated that the storage pocket could comprise a first wall and a second wall where the first wall comprises a portion of the cup and the second wall comprises a portion of a lining of the first cup. The storage pocket may be at an inner surface or at an outer surface of the bra.

[0014] Various methods of storing items are also disclosed herein. For example, in one embodiment, a method of storing one or more items in a bra comprises forming a storage pocket having a opening at its top by connecting the sides and bottom of one or more fabric materials to form a compartment with an open top for storing the items, providing a bra having at least a first cup, and installing the storage pocket at the first cup such that the items may be stored at the first cup. An additional storage pocket may be installed or provided at a side band of the bra.

[0015] It is noted that the storage pocket may be installed in various ways. For example, the storage pocket may be installed between a lining of the first cup and the first cup. Alternatively, the storage pocket may be installed by attaching the storage pocket to an outer surface of the first cup.

[0016] Other systems, methods, features and advantages of the invention will be or will become apparent to one with skill in the art upon examination of the following figures and detailed description. It is intended that all such additional systems, methods, features and advantages be included within this description, be within the scope of the invention, and be protected by the accompanying claims.

BRIEF DESCRIPTION OF THE DRAWINGS

[0017] The components in the figures are not necessarily to scale, emphasis instead being placed upon illustrating the principles of the invention. In the figures, like reference numerals designate corresponding parts throughout the different views.

[0018] FIG. **1** is a front perspective view of an exemplary bra with a storage pocket.

[0019] FIG. **2** is a partial top view of an exemplary bra with a storage pocket.

[0020] FIG. **3**A is a partial cross-sectional view taken along line **3**A-**3**A in FIG. **1** showing an exemplary storage pocket inserted into a lining of a storage bra.

[0021] FIG. **3**B is a partial cross-sectional view taken along line **3**B-**3**B in FIG. **1**, similar to FIG. **3**A, showing an exemplary storage pocket formed in an inner lining of a storage bra.

[0022] FIG. **3**C is a partial cross-sectional view taken along line **3**C-**3**C in FIG. **1**, similar to FIGS. **3**A and **3**B, showing an exemplary storage pocket formed of additional fabric attached to an inner surface of a storage bra.

[0023] FIG. **4**A is a rear perspective view, with a portion in phantom, showing an object received in an exemplary storage pocket.

[0024] FIG. **4**B is a front perspective view showing an object received in an exemplary storage pocket.

[0025] FIG. **5**A is a front perspective view of an exemplary storage bra with a plurality of storage pockets.

[0026] FIG. **5**B is a front perspective view of an exemplary storage pocket at a cup of a storage bra.

[0027] FIG. **5**C is a front perspective view of an exemplary storage pocket at a side band of a storage bra.

[0028] FIG. **5**D is a front perspective view of an exemplary storage pocket at a side band of a storage bra.

DETAILED DESCRIPTION OF THE PREFERRED EMBODIMENTS

[0029] In the following description, numerous specific details are set forth in order to provide a more thorough description of the present invention. It will be apparent, however, to one skilled in the art, that the present invention may be practiced without these specific details. In other instances, well-known features have not been described in detail so as not to obscure the invention.

[0030] In one embodiment, the storage bra disclosed herein provides added utility to the conventional bra by incorporating a storage pocket at the top inside of the cup. As will be described below, the storage pocket may be inserted into the lining of the bra, to formed by the inner lining, or be attached to the outside surface of the inner lining, and may be reinforced by stitching at the bottom and along the two vertical sides. The resulting open top (or mouth) may be selectively closed and secured using such fasteners as snaps, hook and loop fasteners, a zipper or the like, or the top can be left open, with gravity used to maintain the stored article within the pocket. Such articles as paper money, cell phones, credit cards, and like small cargo are contemplated as suitable for storage within the bra pocket.

[0031] FIG. **1** illustrates an exemplary storage bra **104** having a storage pocket **128**. As can be seen, the storage bra **104** comprises a first cup **108**A and a second cup **108**B. The cups **108**A,**108**B may be connected via a bridge **132** therebetween. Side bands **112**A,**112**B may extend at the distal sides or ends of the cups **108**A,**108**B. A pair of straps **116**A,**116**B may form loops to accept a wearer's shoulders by being attached at a first end to an upper portion of the cups **108**A,**108**B and to the side bands **112**A,**112**B at a second end. The side bands **112**A, **112**B may have a coupling or clasping mechanism, such as a hooking assembly so that the side bands **112**A,**112**B may be connected to one another. For example, in FIG. **1**, a first side band **112**A comprises a loop or other attachment mechanism **124**A for hooks **124**B of the other side band **112**B.

[0032] As can be seen the storage pocket **120** may be at one of the cups **108**B. It is contemplated that storage pockets **120** may be at one or both cups **108**A,**108**B. In addition or alternatively, a plurality of storage pockets **120** may be at one or more cups **108**A,**108**B. Also, it is contemplated that one or more storage pockets **120** may be at the side bands **112**A, **112**B of the storage bra **104**. In one or more embodiments, a storage pocket **120** may be sewn or formed in a lining of a cup **108**. Each storage to pocket **120** may have at least one opening **128** to allow items to be inserted and removed from the storage pocket, such as shown in FIG. **1** and the partial top view of FIG. **2**.

[0033] In one or more embodiments, a separate piece of fabric or other material may be attached to the inner or outer surface of a storage bra using stitching on three sides, leaving the fourth side open, thus forming a storage pocket. As used herein, the inner surface refers to the surface of the storage bra that is closer or in contact with a user when the storage bra is worn, while the outer surface faces outward from the user when the storage bra is worn. It is contemplated that a storage pocket may have more or fewer than four sides. For example, a storage pocket may be circular, triangular, include one or more curves or the like as long as a opening is provided to accept items into the storage pocket. The open side or opening of a storage pocket may include a closure fastener, such as hook and loop fasteners, buttons, snaps and the like.

[0034] FIGS. **3**A-**3**C illustrate cross sectional views of exemplary storage pockets **120**. As can be seen, the storage pockets **120** may be installed into or at a cup **108** in a variety of ways. As shown, the storage pockets **120** are installed or mounted on an inner surface of the cup **108** (though they may also or alternatively be installed on an outer surface as will be described further below). As can be seen from FIGS. **3**A-**3**C, a cup **108** may have a lining **304** that lines its surface partially (such as in FIGS. **3**A-**3**B) or fully (such as in FIG. **3**C).

[0035] FIG. **3**A illustrates an embodiment where the storage pocket **120** is positioned between the cup **108** and its lining **304**. As can be seen, in this embodiment, the storage pocket **120** comprises a first and second wall **308**A,**308**B connected at the bottom to form a compartment for storing items. Referring to FIG. **1**, it can be seen that the walls **308**A,**308**B of the storage pocket **120** will typically be connected at their sides as well to form the compartment. The walls **308**A,**308**B of the storage pocket **120** may help reinforce the lining **304** and cup **108** or may protect the lining and cup from wear or damage due to items being stored in the storage pocket.

[0036] It is contemplated that the storage pocket **120** may be adhered or bonded to the cup **108** and/or lining **304**. Alternatively or in addition, the storage pocket **120** may be sewn in between the cup **108** and lining **304**. As can be seen, the opening **128** of the storage pocket **120** may be at a upper portion of the cup **108** thus allowing items to be kept in the storage pocket by gravity. It is contemplated that the opening **128** may simply be open, or may be held closed by including a closing mechanism. For example, a zipper, hook and loop fasteners, buttons, ties, snaps, or the like may be at the opening **128** and configured to hold the opening closed such that items do not fall out of the storage pocket **120**.

[0037] FIG. **3**B illustrates an embodiment of a storage pocket **120** formed by the cup **108** and its lining **304**. This design is beneficial in that it reduces the materials required to form a storage pocket **120**. As can be seen, a portion of the lining **304** may be separated from the cup **108** to form an open area which forms the storage pocket **120**. In other words, a portion of the cup **108** and a portion of the lining **304** may form the walls **308**A,**308**B of the storage compartment **120**. The point at which the lining **304** separates from the cup **108** may be the bottom of the storage pocket to **120**, as can be seen from FIG. **3**B. In addition, sides of the storage pocket **120** may be formed where the lining **304** contacts the cup **108** at the sides of the storage pocket. It is contemplated that the sides and/or bottom of the storage pocket may be reinforced

such as by sewing the bottom and/or sides, by bonding or adhering the bottom and/or sides, or both.

[0038] FIG. **3**C illustrates an embodiment where the lining **304** may be used to form a wall **308**A of the storage pocket **120**. As can be seen, in this embodiment, a second wall **308**B has been attached to the lining **304** to form the storage pocket **120**. As described above, this attachment may occur by adhering, bonding, sewing, or otherwise attaching the material forming the second wall **308**B to the first wall **308**A. Having the lining **304** (or other reinforcement) adjacent the cup **108** may be beneficial in preventing outward protrusions of the cup when items are inserted into the storage pocket **120**. Such bulges or protrusions may be unsightly and thus undesirable.

[0039] It is noted that rather than attaching a second wall, the lining **304** may be separated from the cup **108** to form the second wall **308**B. In such embodiment, the material may be positioned between the second wall **308**B (formed by the lining **304**) and the cup **108** to form a first wall **308**A.

[0040] The one or more materials used to form a storage pocket **120** may differ between embodiments. For example, one or more materials may be netting, lace, memory foam, as well as more conventional artificial or natural fabric materials. In one or more embodiments, the walls **308** of the storage pocket **120** may be formed from one or more of such materials. The one or more materials used may have the same care and washing instructions as the cup **108** and/or lining **304**, such as to allow the storage bra to be washed in a similar manner to traditional bras. In one or more embodiments, the walls **308** may be stretchable to accept items of various sizes and shapes and/or to collapse upon such items to hold them snugly.

[0041] FIGS. **4**A-**4**B respectively illustrate a rear and front view of the storage bra **104** and storage pocket **120**. FIG. **4**A shows the inner surface of the storage bra **104** while FIG. **4**B shows the outer surface of the storage bra. As can be seen, the storage pocket **120** may hold an item **404** therein. The opening **128** of the storage pocket **120** may be positioned near the top of a cup **108** so as to allow items **404** to be stored and removed at the top of the cup. This is convenient for users wearing a variety of tops. As can be seen from FIG. **4**B for instance, the item **404** may held within a storage pocket **120** such that it extends a distance outward so as to be easily reached/accessed by a user. In FIG. **4**B it can be seen that the item **404** may extend beyond the top edge of a cup **108** to permit the item to be easily retrieved from the storage pocket **120**. It is contemplated that an opening **128** may be at a side or at the bottom of a storage pocket **120** rather than the top in some embodiments however.

[0042] As stated, it is contemplated that one or more storage pockets **120** may be located at the outer or inner surface of a storage bra. It has been described above, with regard to FIGS. **3**A-**3**C, how a storage pocket **120** may be formed at or with the inner lining **304** of a storage bra **104**. It is contemplated that one or more storage pockets **120** may be formed on an outer surface of the storage bra **104** in a similar way. For example, a piece of material (e.g., fabric) may be attached to the outer surface of a cup **108** to form a storage pocket **120** having a bottom and two (or more) sides. The material may be attached to the cup **108** at the bottom and sides but be left unattached at the top to form an opening **128**. As stated above, the unattached portion of the material may be at various locations and thus the opening of the storage pocket **120** may be at various locations, including at the bottom or one or more of the sides of the storage pocket **120**. The fabric may be sewn, adhered, bonded, or otherwise attached to the cup **108** as was also disclosed above.

[0043] FIGS. **5**A-**5**D illustrate exemplary storage bras **104** having storage pockets **120** at various locations. Though FIGS. **5**A-**5**D illustrate a front view showing the storage pockets as being on an outer surface of the storage bra **104**, it is contemplated that the storage pockets **120** could also or alternatively be on an inner surface of the storage bra. It is noted that storage bras **104** may have one or multiple storage pockets **120** and that such pockets may be at various locations, as will now be described.

[0044] FIG. **5**A shows an exemplary storage bra **104** having three storage pockets **120**. As can be seen, a storage pocket **120**B may be at one or more, or both cups **108** of a storage bra **104**. In addition, or alternatively, a storage bra **104** may have one or more storage pockets **120**A,**120**C at one or more of its side bands **112**A,**112**B. Having multiple storage pockets **120** is beneficial in that it increases storage capacity. In addition, the location of the storage pockets **120** may improve security and/or convenience for various items (such as valuables). For instance, important items may be stored in storage pockets **120**A,**120**C at the side bands **112**A,**112**B, where they may be more difficult to access, such as because of particular types of apparel a user may be wearing over the storage bra **104**. Items that are more readily needed may be stored at a storage pocket **120**B at one or more cups **108**. Though not shown, it is contemplated that a storage pocket may be at the bridge **132** of the storage bra **104** in some embodiments.

[0045] FIG. **5**B provides a closer view of an exemplary storage pocket **120**B at a cup **108** of the storage bra **104**. As can be seen, the storage pocket **120**B may have a top opening **128** that has a closing mechanism. For instance, in FIG. **5**B the storage pocket **120**B comprises a button **504** that may be used to close the storage pocket to secure items therein. As can also be seen, the storage pocket **120**B may be at the top of a cup **108** for the user's convenience, such as described above.

[0046] FIGS. **5**C and **5**D illustrate closer views of exemplary storage pockets **120**A,**120**C at the side bands **112**A, **112**B of a storage bra **104**. As can be seen, such storage pockets **120**A,**120**C may be sized to fit to a portion of the side bands **112**A,**112**B. For instance, the storage pockets **120**A, **120**C shown have a height similar to that of the side bands **112**A,**112**B.

[0047] The storage pockets **120**A,**120**C at the side bands **112**A,**112**B also illustrate storage pockets having side openings **128** rather than top openings. It is noted that storage pockets **120** at the side bands **112**A,**112**B could alternatively have top opening **128***s,* as is described above.

[0048] A still further alternative provides a stand alone removable storage pocket that is fastened to the inside lining of a storage bra, preferably by a hook and loop fastener system, although other types of fasteners are considered to lie within the scope of the to present invention. For example, at least a portion of the inner or outer surface of a storage bra may have a surface with one or more hooks while the removable pocket has a surface with one or more loops, or vice versa. In this manner, the removable storage pocket may be attached and detached to and from the storage bra. It is contemplated that the hook or loop fastener, or other fastener may be at one or more cups or side bands of the storage bra, such as to position removable storage pockets at a location similar to that of the other storage pockets described herein. Some examples of other fasteners that may be used to removably

affix a removable pocket include zippers, buttons, ties, and magnets. It is noted that magnets could also be used as a closing or clasping mechanism to hold an opening of a storage pocket closed.

[0049] A removable storage pocket can be fabricated out of natural/artificial pieces of fabric, as well as memory foam, micro foam, or other appropriate materials. The pocket can be affixed to the entire top portion of the inner or outer cup surface, or to the entire cup. In the case of the latter embodiment, the fabric can be sewn or stitched in a manner as to accommodate one or more pockets per cup. The pocket may also be affixed to a side band if desired. It is contemplated that the storage bra may comprise a compartment that accepts a removable pocket. For example, a compartment may be formed between a cup and its lining. Such compartment may removably hold a storage pocket in one embodiment.

[0050] While various embodiments of the invention have been described, it will be apparent to those of ordinary skill in the art that many more embodiments and implementations are possible that are within the scope of this invention. In addition, the various features, elements, and embodiments described herein may be claimed or combined in any combination or arrangement.

What is claimed is:

1. A bra for storing one or more items comprising:
a first cup and a second cup connected by a bridge, the first cup and the second cup having a liner;
a first side band extending outward from the first cup;
a second side band extending outward from the second cup; and
a storage pocket at the first cup and having a bottom and at least to sides, the storage pocket comprising a first wall and a second wall connected at the bottom and the at least two sides to form a compartment having an opening to removably store the one or more items.

2. The bra of claim **1** further comprising a closing mechanism at the opening of the storage pocket.

3. The bra of claim **1** further comprising an additional storage pocket at the first side band.

4. The bra of claim **3** further comprising another additional storage pocket at the second side band.

5. The bra of claim **1**, wherein the storage pocket is between the lining of the first cup and the first cup, such that the first wall of the storage pocket is adjacent the first cup and the second wall of the storage pocket is adjacent the lining of the first cup.

6. The bra of claim **1**, wherein the first wall of the storage pocket is formed by a portion of the first cup.

7. The bra of claim **1**, wherein the first wall of the storage pocket is formed by a portion of the lining of the first cup.

8. A bra for storing one or more items comprising:
a first cup;
a second cup connected to the first cup;
a storage pocket at the first cup, the storage pocket comprising a compartment for storing the one or more items; and
one or more straps configured to hold the first cup and second cup to a user.

9. The bra of claim **8** further comprising an additional storage pocket at the second cup, the additional storage pocket comprising a compartment for storing one or more items.

10. The bra of claim **8**, wherein the storage pocket has an opening at its top.

11. The bra of claim **8** further comprising one or more pieces of hook and loop material, wherein the storage pocket attached to the first cup with the one or more pieces of hook and loop material.

12. The bra of claim **8**, wherein the first cup has a lining and the storage pocket is located between a lining of the first cup and the first cup.

13. The bra of claim **8**, wherein the storage pocket comprises a first wall and a second wall, the first wall formed from a portion of the cup, the second wall formed to from a portion of a lining of the first cup.

14. The bra of claim **8**, wherein the storage pocket has an opening with a closing mechanism.

15. The bra of claim **8**, wherein the storage pocket is at an inner surface of the first cup.

16. A method of storing one or more items in a bra comprising:
forming a storage pocket having a opening at its top by connecting the sides and bottom of one or more fabric materials to form a compartment with an open top for storing the one or more items;
providing a bra having at least a first cup; and
installing the storage pocket at the first cup such that the one or more items may be stored at the first cup.

17. The method of claim **16** further comprising providing an additional storage pocket at a side band of the bra.

18. The method of claim **16**, wherein the storage pocket is installed between a lining of the first cup and the first cup.

19. he method of claim **16**, wherein the storage pocket is installed by attaching the storage pocket to an outer surface of the first cup.

20. The method of claim **16** further comprising inserting the one or more items into the storage pocket.

* * * * *