8493896

THE UNITED STATES OF AMERICA

TO ALL TO WHOM THESE PRESENTS SHALL COME:

UNITED STATES DEPARTMENT OF COMMERCE

United States Patent and Trademark Office

May 31, 2024

THIS IS TO CERTIFY THAT ANNEXED IS A TRUE COPY FROM THE RECORDS OF THIS OFFICE OF THE FILE WRAPPER AND CONTENTS OF:

APPLICATION NUMBER: ***15/045,592***
FILING DATE: ***February 17, 2016***
PATENT NUMBER: ***9723878***
ISSUE DATE: ***August 08, 2017***

Certified by

Katherine Kelly Vidal

Performing the Functions and Duties of the
Under Secretary of Commerce
for Intellectual Property
and Director of the United States
Patent and Trademark Office

PTO/SB/08a (01-10)
Approved for use through 07/31/2012. OMB 0651-0031
U.S. Patent and Trademark Office; U.S. DEPARTMENT OF COMMERCE
Under the Paperwork Reduction Act of 1995, no persons are required to respond to a collection of information unless it contains a valid OMB control number.

INFORMATION DISCLOSURE STATEMENT BY APPLICANT

(Not for submission under 37 CFR 1.99)

Application Number	
Filing Date	
First Named Inventor	Sharon Goff
Art Unit	
Examiner Name	
Attorney Docket Number	16-029-SG

U.S.PATENTS Remove

Examiner Initial*	Cite No	Patent Number	Kind Code[1]	Issue Date	Name of Patentee or Applicant of cited Document	Pages,Columns,Lines where Relevant Passages or Relevant Figures Appear
	1	5496205		1996-03-05	Lee	
	2	7753759		2010-07-13	Pintoer et al.	
	3	8257140		2012-09-04	Kenny	
	4	8771036		2014-07-08	Gentry et al.	

If you wish to add additional U.S. Patent citation information please click the Add button. Add

U.S.PATENT APPLICATION PUBLICATIONS Remove

Examiner Initial*	Cite No	Publication Number	Kind Code[1]	Publication Date	Name of Patentee or Applicant of cited Document	Pages,Columns,Lines where Relevant Passages or Relevant Figures Appear
	1	20080032600		2008-02-07	Updyke	
	2	20090104845		2009-04-23	Pintoer et al.	

INFORMATION DISCLOSURE STATEMENT BY APPLICANT (Not for submission under 37 CFR 1.99)	Application Number	
	Filing Date	
	First Named Inventor	Sharon Goff
	Art Unit	
	Examiner Name	
	Attorney Docket Number	16-029-SG

	3	20090209173		2009-08-20	Arledge et a1.			

If you wish to add additional U.S. Published Application citation information please click the Add button. Add

FOREIGN PATENT DOCUMENTS Remove

Examiner Initial*	Cite No	Foreign Document Number[3]	Country Code[2] i	Kind Code[4]	Publication Date	Name of Patentee or Applicant of cited Document	Pages,Columns,Lines where Relevant Passages or Relevant Figures Appear	T[5]
	1							

If you wish to add additional Foreign Patent Document citation information please click the Add button Add

NON-PATENT LITERATURE DOCUMENTS Remove

Examiner Initials*	Cite No	Include name of the author (in CAPITAL LETTERS), title of the article (when appropriate), title of the item (book, magazine, journal, serial, symposium, catalog, etc), date, pages(s), volume-issue number(s), publisher, city and/or country where published.	T[5]
	1		

If you wish to add additional non-patent literature document citation information please click the Add button Add

EXAMINER SIGNATURE

Examiner Signature		Date Considered	

*EXAMINER: Initial if reference considered, whether or not citation is in conformance with MPEP 609. Draw line through a citation if not in conformance and not considered. Include copy of this form with next communication to applicant.

[1] See Kind Codes of USPTO Patent Documents at www.USPTO.GOV or MPEP 901.04. [2] Enter office that issued the document, by the two-letter code (WIPO Standard ST.3). [3] For Japanese patent documents, the indication of the year of the reign of the Emperor must precede the serial number of the patent document. [4] Kind of document by the appropriate symbols as indicated on the document under WIPO Standard ST.16 if possible. [5] Applicant is to place a check mark here if English language translation is attached.

INFORMATION DISCLOSURE STATEMENT BY APPLICANT (Not for submission under 37 CFR 1.99)	Application Number	
	Filing Date	
	First Named Inventor	Sharon Goff
	Art Unit	
	Examiner Name	
	Attorney Docket Number	16-029-SG

CERTIFICATION STATEMENT

Please see 37 CFR 1.97 and 1.98 to make the appropriate selection(s):

That each item of information contained in the information disclosure statement was first cited in any communication from a foreign patent office in a counterpart foreign application not more than three months prior to the filing of the information disclosure statement. See 37 CFR 1.97(e)(1).

OR

☐ That no item of information contained in the information disclosure statement was cited in a communication from a foreign patent office in a counterpart foreign application, and, to the knowledge of the person signing the certification after making reasonable inquiry, no item of information contained in the information disclosure statement was known to any individual designated in 37 CFR 1.56(c) more than three months prior to the filing of the information disclosure statement. See 37 CFR 1.97(e)(2).

See attached certification statement.

The fee set forth in 37 CFR 1.17 (p) has been submitted herewith.

☒ A certification statement is not submitted herewith.

SIGNATURE

A signature of the applicant or representative is required in accordance with CFR 1.33, 10.18. Please see CFR 1.4(d) for the form of the signature.

Signature	/David J. Connaughton, Jr./	Date (YYYY-MM-DD)	2016-02-16
Name/Print	David J. Connaughton, Jr.	Registration Number	67275

This collection of information is required by 37 CFR 1.97 and 1.98. The information is required to obtain or retain a benefit by the public which is to file (and by the USPTO to process) an application. Confidentiality is governed by 35 U.S.C. 122 and 37 CFR 1.14. This collection is estimated to take 1 hour to complete, including gathering, preparing and submitting the completed application form to the USPTO. Time will vary depending upon the individual case. Any comments on the amount of time you require to complete this form and/or suggestions for reducing this burden, should be sent to the Chief Information Officer, U.S. Patent and Trademark Office, U.S. Department of Commerce, P.O. Box 1450, Alexandria, VA 22313-1450. DO NOT SEND FEES OR COMPLETED FORMS TO THIS ADDRESS. **SEND TO: Commissioner for Patents, P.O. Box 1450, Alexandria, VA 22313-1450.**

Privacy Act Statement

The Privacy Act of 1974 (P.L. 93-579) requires that you be given certain information in connection with your submission of the attached form related to a patent application or patent. Accordingly, pursuant to the requirements of the Act, please be advised that: (1) the general authority for the collection of this information is 35 U.S.C. 2(b)(2); (2) furnishing of the information solicited is voluntary; and (3) the principal purpose for which the information is used by the U.S. Patent and Trademark Office is to process and/or examine your submission related to a patent application or patent. If you do not furnish the requested information, the U.S. Patent and Trademark Office may not be able to process and/or examine your submission, which may result in termination of proceedings or abandonment of the application or expiration of the patent.

The information provided by you in this form will be subject to the following routine uses:

1. The information on this form will be treated confidentially to the extent allowed under the Freedom of Information Act (5 U.S.C. 552) and the Privacy Act (5 U.S.C. 552a). Records from this system of records may be disclosed to the Department of Justice to determine whether the Freedom of Information Act requires disclosure of these record s.

2. A record from this system of records may be disclosed, as a routine use, in the course of presenting evidence to a court, magistrate, or administrative tribunal, including disclosures to opposing counsel in the course of settlement negotiations.

3. A record in this system of records may be disclosed, as a routine use, to a Member of Congress submitting a request involving an individual, to whom the record pertains, when the individual has requested assistance from the Member with respect to the subject matter of the record.

4. A record in this system of records may be disclosed, as a routine use, to a contractor of the Agency having need for the information in order to perform a contract. Recipients of information shall be required to comply with the requirements of the Privacy Act of 1974, as amended, pursuant to 5 U.S.C. 552a(m).

5. A record related to an International Application filed under the Patent Cooperation Treaty in this system of records may be disclosed, as a routine use, to the International Bureau of the World Intellectual Property Organization, pursuant to the Patent Cooperation Treaty.

6. A record in this system of records may be disclosed, as a routine use, to another federal agency for purposes of National Security review (35 U.S.C. 181) and for review pursuant to the Atomic Energy Act (42 U.S.C. 218(c)).

7. A record from this system of records may be disclosed, as a routine use, to the Administrator, General Services, or his/her designee, during an inspection of records conducted by GSA as part of that agency's responsibility to recommend improvements in records management practices and programs, under authority of 44 U.S.C. 2904 and 2906. Such disclosure shall be made in accordance with the GSA regulations governing inspection of records for this purpose, and any other relevant (i.e., GSA or Commerce) directive. Such disclosure shall not be used to make determinations about individuals.

8. A record from this system of records may be disclosed, as a routine use, to the public after either publication of the application pursuant to 35 U.S.C. 122(b) or issuance of a patent pursuant to 35 U.S.C. 151. Further, a record may be disclosed, subject to the limitations of 37 CFR 1.14, as a routine use, to the public if the record was filed in an application which became abandoned or in which the proceedings were terminated and which application is referenced by either a published application, an application open to public inspections or an issued patent.

9. A record from this system of records may be disclosed, as a routine use, to a Federal, State, or local law enforcement agency, if the USPTO becomes aware of a violation or potential violation of law or regulation.

PTO/AIA/82A (07-12)
Approved for use through 11/30/2014. OMB 0651-0035
U.S. Patent and Trademark Office; U.S. DEPARTMENT OF COMMERCE
Under the Paperwork Reduction Act of 1995, no persons are required to respond to a collection of information unless it displays a valid OMB control number.

TRANSMITTAL FOR POWER OF ATTORNEY TO ONE OR MORE REGISTERED PRACTITIONERS

NOTE: This form is to be submitted with the Power of Attorney by Applicant form (PTO/AIA/82B or equivalent) to identify the application to which the Power of Attorney is directed, in accordance with 37 CFR 1.5. If the Power of Attorney by Applicant form is not accompanied by this transmittal form or an equivalent, the Power of Attorney will not be recognized in the application.

Application Number	
Filing Date	
First Named Inventor	Sharon Goff
Title	POCKET BRA SYSTEM
Art Unit	
Examiner Name	
Attorney Docket Number	16-029-SG

SIGNATURE of Applicant or Patent Practitioner

Signature	/David J. Connaughton, Jr./	Date	
Name	David J. Connaughton, Jr.	Telephone	
Registration Number	67275		

NOTE: This form must be signed in accordance with 37 CFR 1.33. See 37 CFR 1.4(d) for signature requirements and certifications.

☐ *Total of 1 forms are submitted.

This collection of information is required by 37 CFR 1.31, 1.32 and 1.33. The information is required to obtain or retain a benefit by the public which is to file (and by the USPTO to process) an application. Confidentiality is governed by 35 U.S.C. 122 and 37 CFR 1.11 and 1.14. This collection is estimated to take 3 minutes to complete, including gathering, preparing, and submitting the completed application form to the USPTO. Time will vary depending upon the individual case. Any comments on the amount of time you require to complete this form and/or suggestions for reducing this burden, should be sent to the Chief Information Officer, U.S. Patent and Trademark Office, U.S. Department of Commerce, P.O. Box 1450, Alexandria, VA 22313-1450. DO NOT SEND FEES OR COMPLETED FORMS TO THIS ADDRESS. **SEND TO: Commissioner for Patents, P.O. Box 1450, Alexandria, VA 22313-1450.**

If you need assistance in completing the form, call 1-800-PTO-9199 and select option 2.

Doc Code: PA..
Document Description: Power of Attorney

PTO/AIA/82B(07-12)
Approved for use through 11/30/2014. OMB 0651-0035
U.S. Patent and Trademark Office; U.S. DEPARTMENT OF COMMERCE
Under the Paperwork Reduction Act of 1995, no persons are required to respond to a collection of information unless it displays a valid OMB control number.

POWER OF ATTORNEY BY APPLICANT

I hereby revoke all previous powers of attorney given in the application identified in the attached transmittal letter.

[x] I hereby appoint Practitioner(s) associated with the following Customer Number as my/our attorney(s) or agent(s), and to transact all business in the United States Patent and Trademark Office connected therewith for the application referenced in the attached transmittal letter (form PTO/AIA/82A or equivalent): 32118

OR

[ ] I hereby appoint Practitioner(s) named below as my/our attorney(s) or agent(s), and to transact all business in the United States Patent and Trademark Office connected therewith for the application referenced in the attached transmittal letter (form PTO/AIA/82A or equivalent):

Name	Registration Number	Name	Registration Number

Please recognize or change the correspondence address for the application identified in the attached transmittal letter to:

[x] The address associated with the above-mentioned Customer Number.

OR

[ ] The address associated with Customer Number:

OR

[ ] Firm or Individual Name					
Address					
City		State		Zip	
Country					
Telephone		Email			

I am the Applicant:

[x] Inventor or Joint Inventor

[ ] Legal Representative of a Deceased or Legally Incapacitated Inventor

[ ] Assignee or Person to Whom the Inventor is Under an Obligation to Assign

[ ] Person Who Otherwise Shows Sufficient Proprietary Interest (*e.g.,* a petition under 37 CFR 1.46(b)(2) was granted in the application or is concurrently being filed with this document)

SIGNATURE of Applicant for Patent

Signature	/Sharon Goff/	Date	2/4/16
Name	Sharon Goff	Telephone	
Title and Company			

NOTE: Signature - This form must be signed by the applicant in accordance with 37 CFR 1.33. See 37 CFR 1.4 for signature requirements and certifications. Submit multiple forms for more than one signature, see below *.

[ ] *Total of 1 forms are submitted.

This collection of information is required by 37 CFR 1.31, 1.32 and 1.33. The information is required to obtain or retain a benefit by the public which is to file (and by the USPTO to process) an application. Confidentiality is governed by 35 U.S.C. 122 and 37 CFR 1.11 and 1.14. This collection is estimated to take 3 minutes to complete, including gathering, preparing, and submitting the completed application form to the USPTO. Time will vary depending upon the individual case. Any comments on the amount of time you require to complete this form and/or suggestions for reducing this burden, should be sent to the Chief Information Officer, U.S. Patent and Trademark Office, U.S. Department of Commerce, P.O. Box 1450, Alexandria, VA 22313-1450. DO NOT SEND FEES OR COMPLETED FORMS TO THIS ADDRESS. **SEND TO: Commissioner for Patents, P.O. Box 1450, Alexandria, VA 22313-1450.**

If you need assistance in completing the form, call 1-800-PTO-9199 and select option 2.

Privacy Act Statement

The **Privacy Act of 1974 (P.L. 93-579)** requires that you be given certain information in connection with your submission of the attached form related to a patent application or patent. Accordingly, pursuant to the requirements of the Act, please be advised that: (1) the general authority for the collection of this information is 35 U.S.C. 2(b)(2); (2) furnishing of the information solicited is voluntary; and (3) the principal purpose for which the information is used by the U.S. Patent and Trademark Office is to process and/or examine your submission related to a patent application or patent. If you do not furnish the requested information, the U.S. Patent and Trademark Office may not be able to process and/or examine your submission, which may result in termination of proceedings or abandonment of the application or expiration of the patent.

The information provided by you in this form will be subject to the following routine uses:

1. The information on this form will be treated confidentially to the extent allowed under the Freedom of Information Act (5 U.S.C. 552) and the Privacy Act (5 U.S.C 552a). Records from this system of records may be disclosed to the Department of Justice to determine whether disclosure of these records is required by the Freedom of Information Act.
2. A record from this system of records may be disclosed, as a routine use, in the course of presenting evidence to a court, magistrate, or administrative tribunal, including disclosures to opposing counsel in the course of settlement negotiations.
3. A record in this system of records may be disclosed, as a routine use, to a Member of Congress submitting a request involving an individual, to whom the record pertains, when the individual has requested assistance from the Member with respect to the subject matter of the record.
4. A record in this system of records may be disclosed, as a routine use, to a contractor of the Agency having need for the information in order to perform a contract. Recipients of information shall be required to comply with the requirements of the Privacy Act of 1974, as amended, pursuant to 5 U.S.C. 552a(m).
5. A record related to an International Application filed under the Patent Cooperation Treaty in this system of records may be disclosed, as a routine use, to the International Bureau of the World Intellectual Property Organization, pursuant to the Patent Cooperation Treaty.
6. A record in this system of records may be disclosed, as a routine use, to another federal agency for purposes of National Security review (35 U.S.C. 181) and for review pursuant to the Atomic Energy Act (42 U.S.C. 218(c)).
7. A record from this system of records may be disclosed, as a routine use, to the Administrator, General Services, or his/her designee, during an inspection of records conducted by GSA as part of that agency's responsibility to recommend improvements in records management practices and programs, under authority of 44 U.S.C. 2904 and 2906. Such disclosure shall be made in accordance with the GSA regulations governing inspection of records for this purpose, and any other relevant (*i.e.*, GSA or Commerce) directive. Such disclosure shall not be used to make determinations about individuals.
8. A record from this system of records may be disclosed, as a routine use, to the public after either publication of the application pursuant to 35 U.S.C. 122(b) or issuance of a patent pursuant to 35 U.S.C. 151. Further, a record may be disclosed, subject to the limitations of 37 CFR 1.14, as a routine use, to the public if the record was filed in an application which became abandoned or in which the proceedings were terminated and which application is referenced by either a published application, an application open to public inspection or an issued patent.
9. A record from this system of records may be disclosed, as a routine use, to a Federal, State, or local law enforcement agency, if the USPTO becomes aware of a violation or potential violation of law or regulation.

PTO/AIA/08 (06-12)
Approved for use through 01/31/2014. OMB 0651-0032
U.S. Patent and Trademark Office; U.S. DEPARTMENT OF COMMERCE
Under the Paperwork Reduction Act of 1995, no persons are required to respond to a collection of information unless it contains a valid OMB control number.

DECLARATION FOR UTILITY OR DESIGN PATENT APPLICATION (37 CFR 1.63)

Attorney Docket Number	16-029-SG
First Named Inventor	Sharon Goff
COMPLETE IF KNOWN	
Application Number	
Filing Date	
Art Unit	
Examiner Name	

☒ Declaration Submitted With Initial Filing OR ☐ Declaration Submitted After Initial Filing (surcharge (37 CFR 1.16(f)) required)

POCKET BRA SYSTEM

(Title of the Invention)

As a below named inventor, I hereby declare that:

This declaration is directed to:

☒ The attached application,

OR

☐ United States Application Number or PCT International application number _____

filed on _____.

The above-identified application was made or authorized to be made by me.

I believe I am the original inventor or an original joint inventor of a claimed invention in the application.

I hereby acknowledge that any willful false statement made in this declaration is punishable under 18 U.S.C. 1001 by fine or imprisonment of not more than five (5) years, or both.

Authorization To Permit Access To Application by Participating Office

☐ If checked, the undersigned hereby grants the USPTO authority to provide the European Patent Office (EPO), the Japan Patent Office (JPO), the Korean Intellectual Property Office (KIPO), the World Intellectual Property Office (WIPO), and any other intellectual property offices in which a foreign application claiming priority to the above-identified patent application is filed access to the above-identified patent application. See 37 CFR 1.14(c) and (h). This box should not be checked if the applicant does not wish the EPO, JPO, KIPO, WIPO, or other intellectual property office in which a foreign application claiming priority to the above-identified patent application is filed to have access to the above-identified patent application.

In accordance with 37 CFR 1.14(h)(3), access will be provided to a copy of the above-identified patent application with respect to: 1) the above-identified patent application-as-filed; 2) any foreign application to which the above-identified patent application claims priority under 35 U.S.C. 119(a)-(d) if a copy of the foreign application that satisfies the certified copy requirement of 37 CFR 1.55 has been filed in the above-identified patent application; and 3) any U.S. application-as-filed from which benefit is sought in the above-identified patent application.

In accordance with 37 CFR 1.14(c), access may be provided to information concerning the date of filing the Authorization to Permit Access to Application by Participating Offices.

This collection of information is required by 35 U.S.C. 115 and 37 CFR 1.63. The information is required to obtain or retain a benefit by the public which is to file (and by the USPTO to process) an application. Confidentiality is governed by 35 U.S.C. 122 and 37 CFR 1.11 and 1.14. This collection is estimated to take 21 minutes to complete, including gathering, preparing, and submitting the completed application form to the USPTO. Time will vary depending upon the individual case. Any comments on the amount of time you require to complete this form and/or suggestions for reducing this burden, should be sent to the Chief Information Officer, U.S. Patent and Trademark Office, U.S. Department of Commerce, P.O. Box 1450, Alexandria, VA 22313-1450. DO NOT SEND FEES OR COMPLETED FORMS TO THIS ADDRESS. **SEND TO: Commissioner for Patents, P.O. Box 1450, Alexandria, VA 22313-1450.**
If you need assistance in completing the form, call 1-800-786-9199 and select option 2.

Under the Paperwork Reduction Act of 1995, no persons are required to respond to a collection of information unless it contains a valid OMB control number.

DECLARATION — Utility or Design Patent Application

Direct all correspondence to:	☒	The address associated with Customer Number:	32118	OR	☐ Correspondence address below

Name		
Address		
City	State	Zip
Country	Telephone	Email

WARNING:

Petitioner/applicant is cautioned to avoid submitting personal information in documents filed in a patent application that may contribute to identity theft. Personal information such as social security numbers, bank account numbers, or credit card numbers (other than a check or credit card authorization form PTO-2038 submitted for payment purposes) is never required by the USPTO to support a petition or an application. If this type of personal information is included in documents submitted to the USPTO, petitioners/applicants should consider redacting such personal information from the documents before submitting them to the USPTO. Petitioner/applicant is advised that the record of a patent application is available to the public after publication of the application (unless a non-publication request in compliance with 37 CFR 1.213(a) is made in the application) or issuance of a patent. Furthermore, the record from an abandoned application may also be available to the public if the application is referenced in a published application or an issued patent (see 37 CFR 1.14). Checks and credit card authorization forms PTO-2038 submitted for payment purposes are not retained in the application file and therefore are not publicly available. Petitioner/applicant is advised that documents which form the record of a patent application (such as the PTO/SB/01) are placed into the Privacy Act system of records DEPARTMENT OF COMMERCE, COMMERCE-PAT-7, System name: *Patent Application Files* . Documents not retained in an application file (such as the PTO-2038) are placed into the Privacy Act system of COMMERCE/PAT-TM-10, System name: *Deposit Accounts and Electronic Funds Transfer Profiles* .

LEGAL NAME OF SOLE OR FIRST INVENTOR:

(*E.g.*, Given Name (first and middle (if any)) and Family Name or Surname)

Sharon Goff

Inventor's Signature /Sharon Goff/		Date (Optional)	
Residence: City Hilton Head	State SC	Country US	
Mailing Address 24 Wood Duck Ct.			
City Hlton Head	State SC	Zip 29928	Country US

☐ Additional inventors are being named on the _____ supplemental sheet(s) PTO/AIA/10 attached hereto

Nike, Inc. v. SherryWear, LLC et al. IPR2024-01128 SherryWear, LLC Exhibit 2066 Page 10

Privacy Act Statement

The Privacy Act of 1974 (P.L. 93-579) requires that you be given certain information in connection with your submission of the attached form related to a patent application or patent. Accordingly, pursuant to the requirements of the Act, please be advised that: (1) the general authority for the collection of this information is 35 U.S.C. 2(b)(2); (2) furnishing of the information solicited is voluntary; and (3) the principal purpose for which the information is used by the U.S. Patent and Trademark Office is to process and/or examine your submission related to a patent application or patent. If you do not furnish the requested information, the U.S. Patent and Trademark Office may not be able to process and/or examine your submission, which may result in termination of proceedings or abandonment of the application or expiration of the patent.

The information provided by you in this form will be subject to the following routine uses:

1. The information on this form will be treated confidentially to the extent allowed under the Freedom of Information Act (5 U.S.C. 552) and the Privacy Act (5 U.S.C 552a). Records from this system of records may be disclosed to the Department of Justice to determine whether disclosure of these records is required by the Freedom of Information Act.
2. A record from this system of records may be disclosed, as a routine use, in the course of presenting evidence to a court, magistrate, or administrative tribunal, including disclosures to opposing counsel in the course of settlement negotiations.
3. A record in this system of records may be disclosed, as a routine use, to a Member of Congress submitting a request involving an individual, to whom the record pertains, when the individual has requested assistance from the Member with respect to the subject matter of the record.
4. A record in this system of records may be disclosed, as a routine use, to a contractor of the Agency having need for the information in order to perform a contract. Recipients of information shall be required to comply with the requirements of the Privacy Act of 1974, as amended, pursuant to 5 U.S.C. 552a(m).
5. A record related to an International Application filed under the Patent Cooperation Treaty in this system of records may be disclosed, as a routine use, to the International Bureau of the World Intellectual Property Organization, pursuant to the Patent Cooperation Treaty.
6. A record in this system of records may be disclosed, as a routine use, to another federal agency for purposes of National Security review (35 U.S.C. 181) and for review pursuant to the Atomic Energy Act (42 U.S.C. 218(c)).
7. A record from this system of records may be disclosed, as a routine use, to the Administrator, General Services, or his/her designee, during an inspection of records conducted by GSA as part of that agency's responsibility to recommend improvements in records management practices and programs, under authority of 44 U.S.C. 2904 and 2906. Such disclosure shall be made in accordance with the GSA regulations governing inspection of records for this purpose, and any other relevant (i.e., GSA or Commerce) directive. Such disclosure shall not be used to make determinations about individuals.
8. A record from this system of records may be disclosed, as a routine use, to the public after either publication of the application pursuant to 35 U.S.C. 122(b) or issuance of a patent pursuant to 35 U.S.C. 151. Further, a record may be disclosed, subject to the limitations of 37 CFR 1.14, as a routine use, to the public if the record was filed in an application which became abandoned or in which the proceedings were terminated and which application is referenced by either a published application, an application open to public inspection or an issued patent.
9. A record from this system of records may be disclosed, as a routine use, to a Federal, State, or local law enforcement agency, if the USPTO becomes aware of a violation or potential violation of law or regulation.

FIG. 1

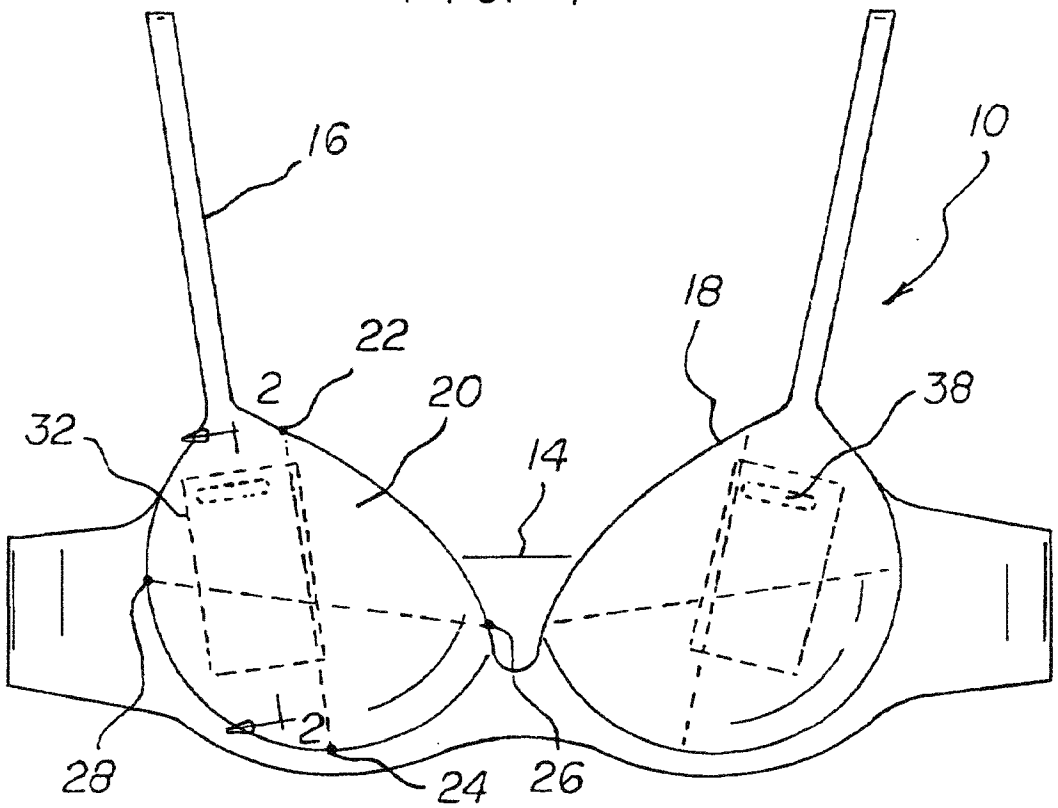

FIG. 2

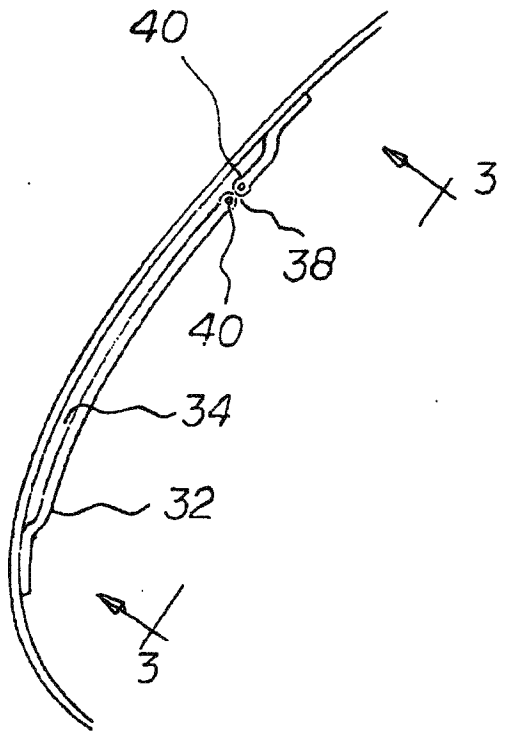

FIG. 3

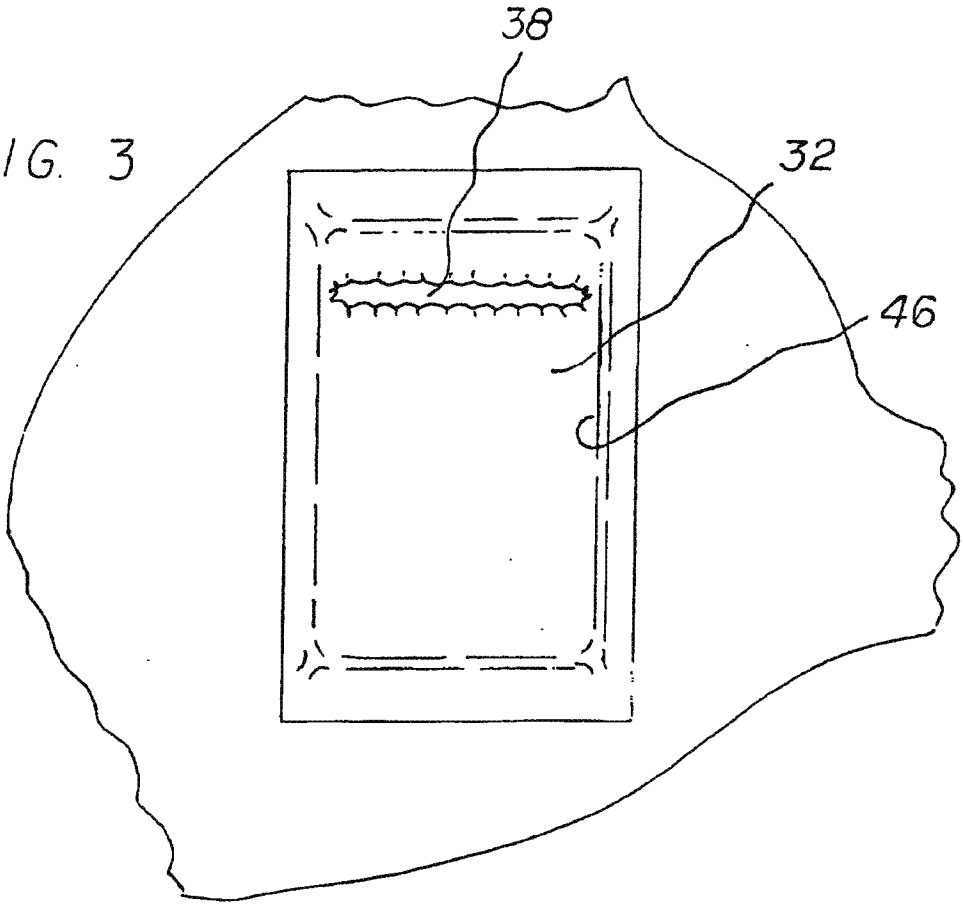

FIG. 4

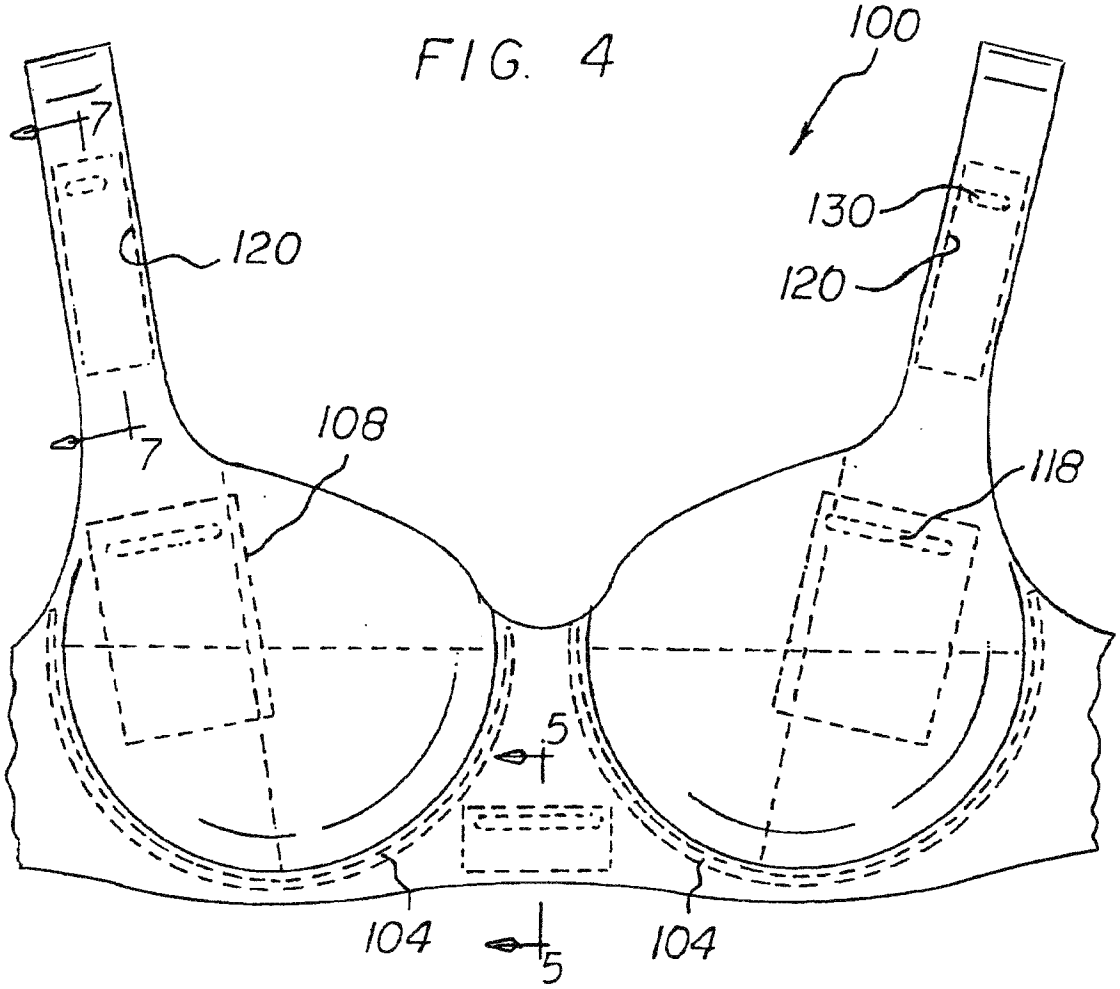

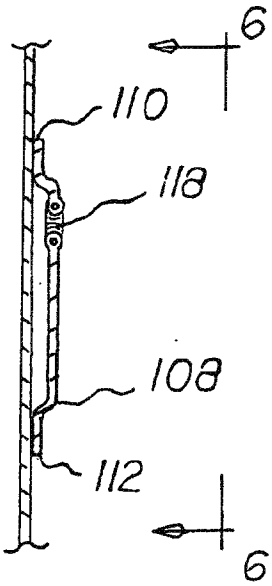

FIG. 5

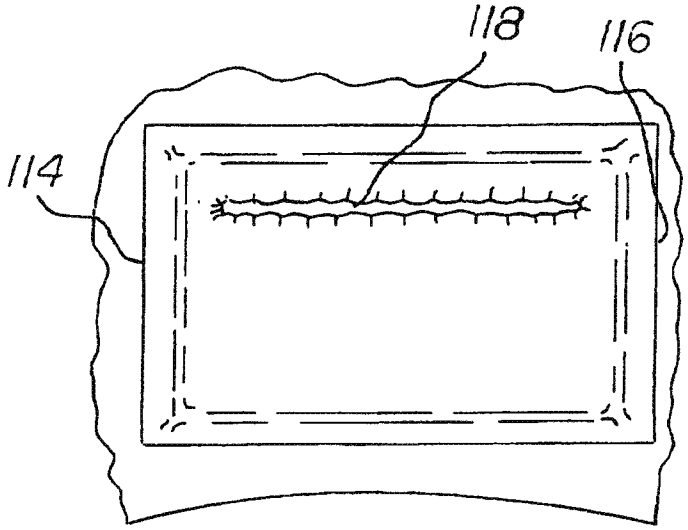

FIG. 6

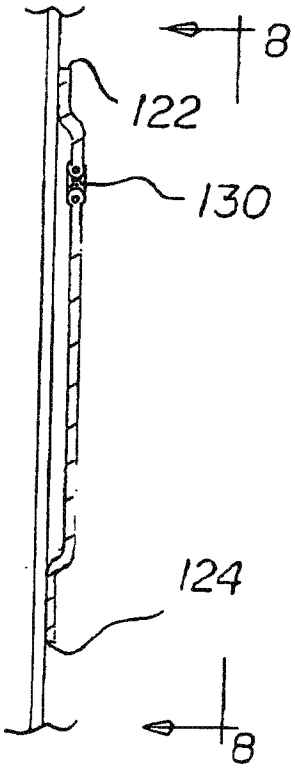

FIG. 7

FIG. 8

FIG. 9

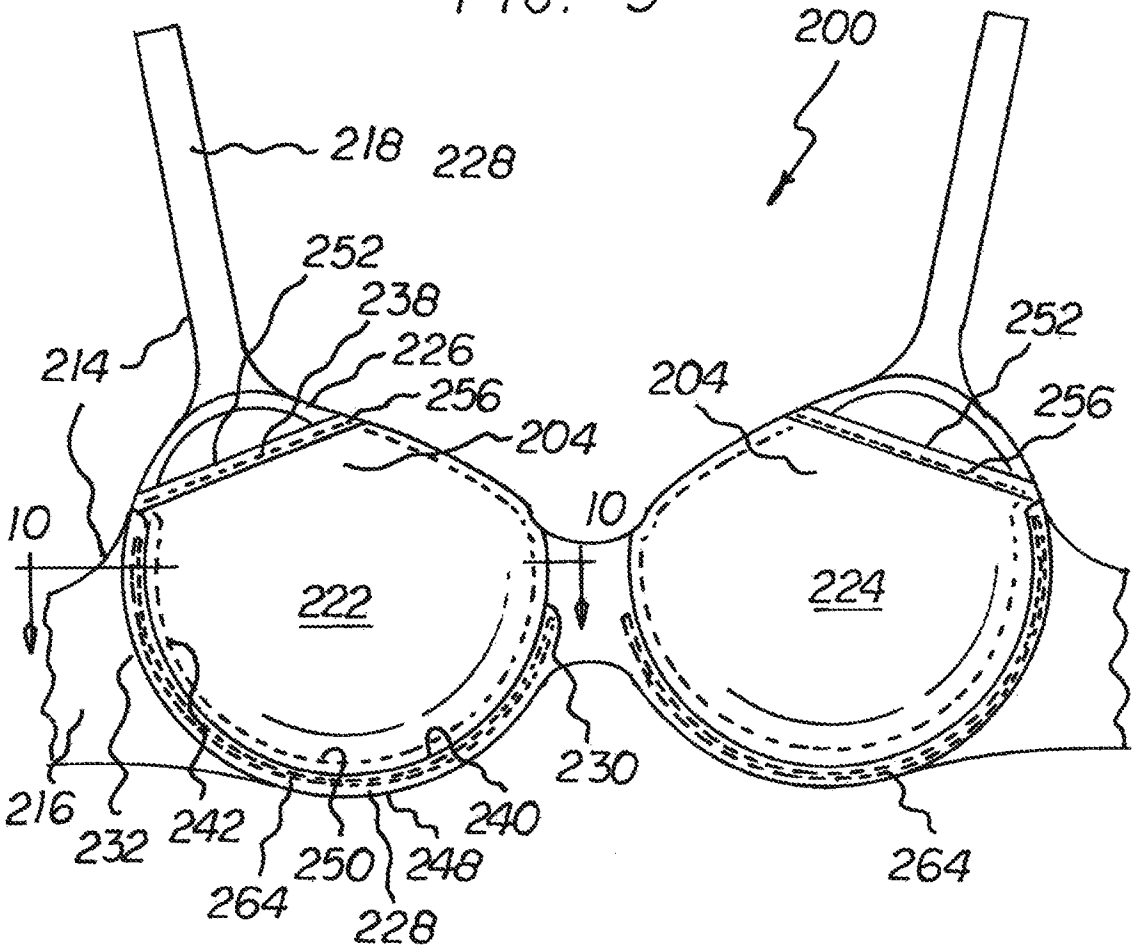
200
218
228
252
238
226
256
214
204
252
256
204
10
10
222
224
216
232
242
264
250
248
228
240
230
264

FIG. 10

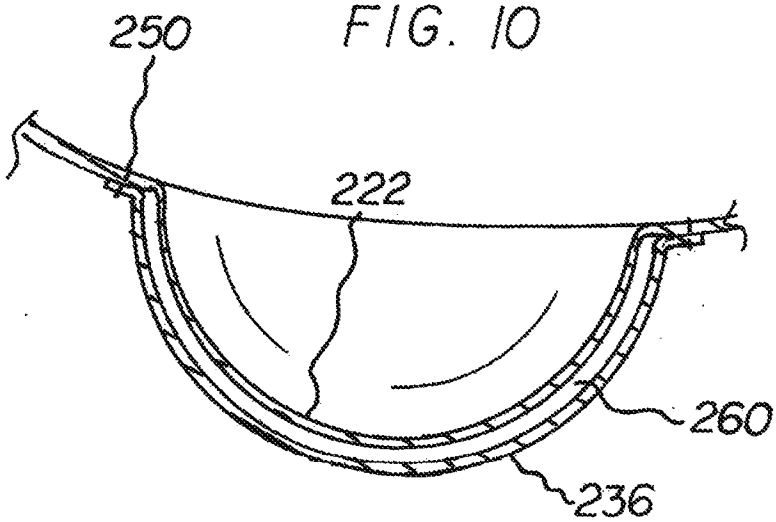
250
222
260
236

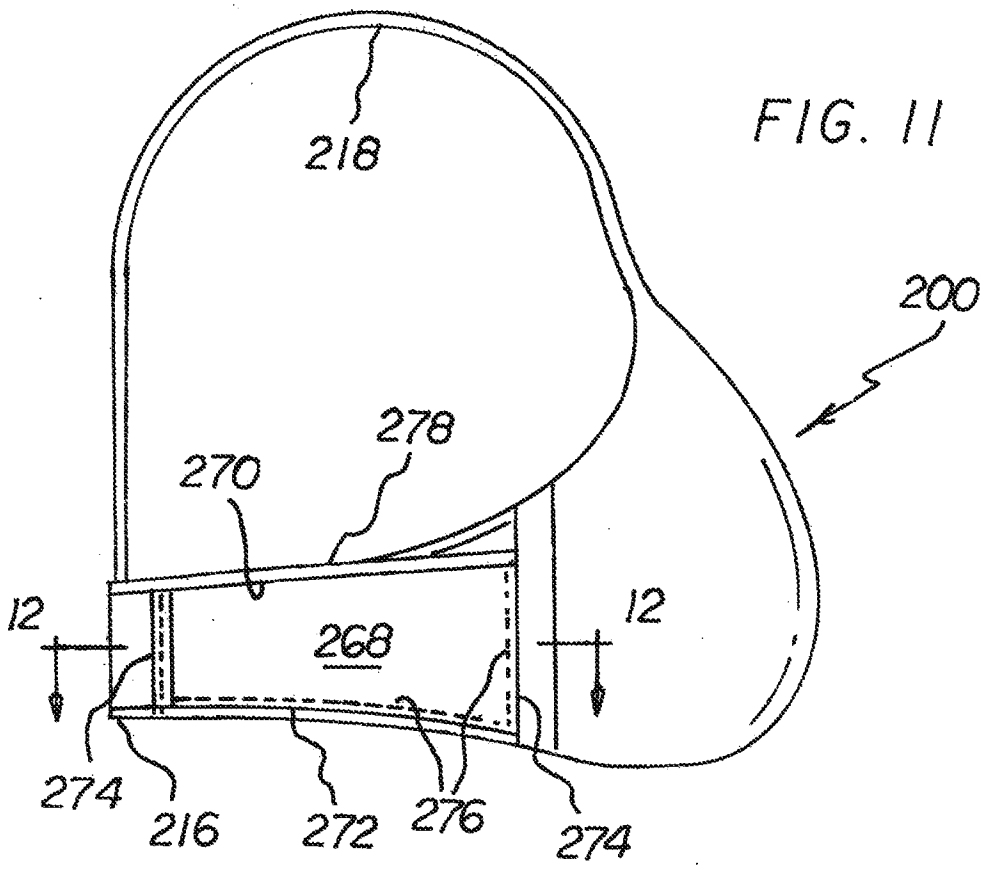

FIG. 11

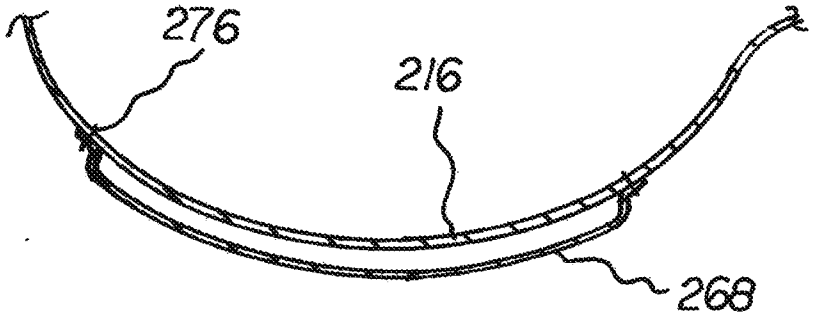

FIG. 12

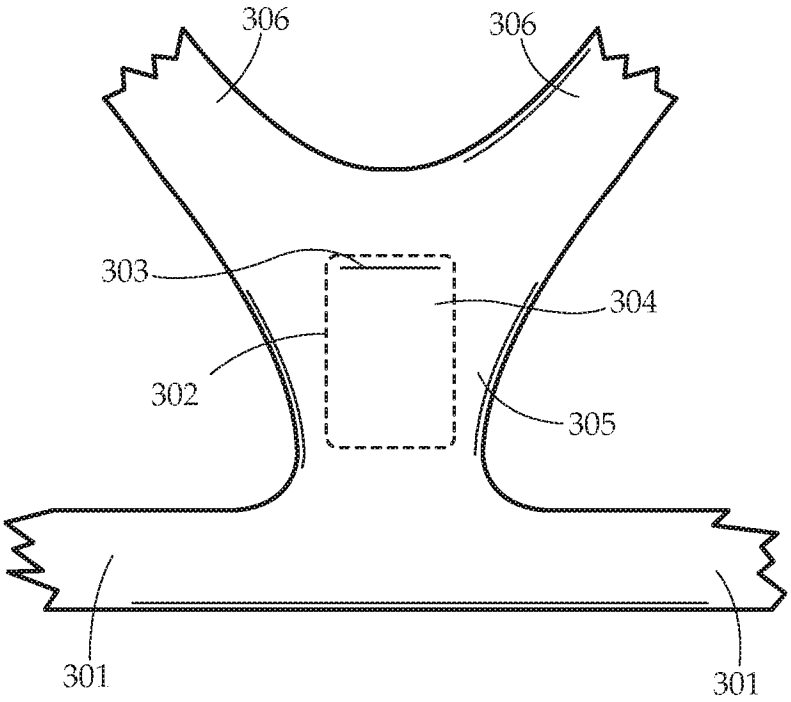

Fig. 13

POCKET BRA SYSTEM

APPLICATION

FOR UNITED STATES LETTERS PATENT

SPECIFICATION

TO ALL WHOM IT MAY CONCERN:

BE IT KNOWN THAT I, SHARON J. GOFF, a citizen of the UNITED STATES OF AMERICA, have invented new and useful improvements in a POCKET BRA SYSTEM of which the following is a specification:

POCKET BRA SYSTEM

BACKGROUND OF THE INVENTION

Field of the Invention

The present invention relates to a pocket bra system and more particularly pertains to removably receiving a handheld electronic device while providing support and shape to the breasts of a wearer, the receiving and supporting and shaping being done in a safe, convenient and economical manner.

SUMMARY OF THE INVENTION

In view of the disadvantages inherent in the known types of bra systems of known designs and configurations now present in the prior art, the present invention provides an improved pocket bra system. As such, the general purpose of the present invention, which will be described subsequently in greater detail, is to provide a new and improved pocket bra system and method which has all the advantages of the prior art and none of the disadvantages.

To attain this, the present invention essentially comprises a pocket bra system. First provided is a strap assembly which includes a chest strap and shoulder straps. Similarly configured left and right cups are provided. The strap assembly is attached to the cups whereby the strap assembly adheres the

Nike, Inc. v. SherryWear, LLC et al. IPR2024-01128 SherryWear, LLC Exhibit 2066 Page 20

cups to a wearer. Each cup has curved upper, lower, interior and exterior edges. Each cup has inside and outside surfaces. A patch is operatively associated with each cup. Each patch has a linear upper edge and curved lower, interior and exterior edges. Each patch has inside and outside surfaces. Stitching couples the lower, interior and exterior edges of each patch to the lower, interior and exterior edges of an associated cup. A linear opening is formed along the upper edge of each patch. Piping covers the upper edge of each patch. The piping is adapted to allow the patch to move away from and back toward the cup between open and closed orientations.

In other embodiments, any of the pockets disclosed herein may have a closure structure, such as a hook and loop connector, zipper, a snap closure, button, magnet, and the like.

There has thus been outlined, rather broadly, the more important features of the invention in order that the detailed description thereof that follows may be better understood and in order that the present contribution to the art may be better appreciated. There are, of course, additional features of the invention that will be described hereinafter and which will form the subject matter of the claims attached.

Nike, Inc. v. SherryWear, LLC et al. IPR2024-01128 SherryWear, LLC Exhibit 2066 Page 21

In this respect, before explaining at least one embodiment of the invention in detail, it is to be understood that the invention is not limited in its application to the details of construction and to the arrangements of the components set forth in the following description or illustrated in the drawings. The invention is capable of other embodiments and of being practiced and carried out in various ways. Also, it is to be understood that the phraseology and terminology employed herein are for the purpose of descriptions and should not be regarded as limiting.

As such, those skilled in the art will appreciate that the conception, upon which this disclosure is based, may readily be utilized as a basis for the designing of other structures, methods and systems for carrying out the several purposes of the present invention. It is important, therefore, that the claims be regarded as including such equivalent constructions insofar as they do not depart from the spirit and scope of the present invention.

It is therefore an object of the present invention to provide a new and improved pocket bra system which has all of the advantages of the prior art bra systems of known designs and configurations and none of the disadvantages.

Nike, Inc. v. SherryWear, LLC et al. IPR2024-01128 SherryWear, LLC Exhibit 2066 Page 22

It is another object of the present invention to provide a new and improved pocket bra system which may be easily and efficiently manufactured and marketed.

It is further object of the present invention to provide a new and improved pocket bra system which is of durable and reliable constructions.

An even further object of the present invention is to provide a new and improved pocket bra system which is susceptible of a low cost of manufacture with regard to both materials and labor, and which accordingly is then susceptible of low prices of sale to the consuming public, thereby making such pocket bra system economically available to the buying public. It should be understood that the present invention may be formed of any material capable of being used as a bra. These materials may include any sort of flexible fabric, whether elastic or not, plastics, films, and the like. In some embodiments, certain materials may be stitched or layered into the materials to provide different functionality such as an underwire, radio-frequency shielding materials, elastic materials, and the like.

Even still another object of the present invention is to provide a pocket bra system for removably receiving a handheld electronic device while providing support and shape to the breasts of a wearer,

Nike, Inc. v. SherryWear, LLC et al. IPR2024-01128 SherryWear, LLC Exhibit 2066 Page 23

the receiving and supporting and shaping being done in a safe, convenient and economical manner.

Lastly, it is an object of the present invention to provide a new and improved pocket bra system for removably receiving a handheld electronic device and other objects while providing support and shape to the breasts of a wearer.

These handheld electronic devices and other objects may be any items that are capable of being stored within a pocket on a bra. For example, the electronic devices may be any portable electronic-based device, including, but not limited to cellular telephones (including smartphones), tablets, portable music players, exercise tracking devices such as GPS devices, pedometers, bio-monitors, computation devices, electronic devices, and medical devices, and the like, any other portable and relatively small electronic device, as well as personal items. Similarly, the other objects may be any small objects that are commonly placed in a pocket of a wearer, such as keys, cards, wallets, medicines and medicine dosages, insulin pumps, and the like.

These together with other objects of the invention, along with the various features of novelty which characterize the invention, are pointed out with particularity in the claims annexed to and forming a part of this disclosure. For a better understanding of the

Nike, Inc. v. SherryWear, LLC et al. IPR2024-01128 SherryWear, LLC Exhibit 2066 Page 24

invention, its operating advantages and the specific objects attained by its uses, reference should be had to the accompanying drawings and descriptive matter in which there is illustrated preferred and alternate embodiments of the invention.

BRIEF DESCRIPTION OF THE DRAWINGS

The invention will be better understood and objects other than those set forth above will become apparent when consideration is given to the following detailed description thereof. Such description makes reference to the annexed drawings wherein:

Figure 1 is a front elevational view of a pocket bra system constructed in accordance with the principles of the present invention.

Figure 2 is a cross sectional view taken along line 2-2 of Figure 1.

Figure 3 is a rear elevational view taken along line 3-3 of Figure 2.

Figure 4 is a front elevational view of a pocket bra system constructed in accordance with an alternate embodiment of the invention.

Figure 5 is a cross sectional view taken along line 5-5 of Figure 4.

Nike, Inc. v. SherryWear, LLC et al. IPR2024-01128 SherryWear, LLC Exhibit 2066 Page 25

Figure 6 is a rear elevational view taken along line 6-6 of Figure 5.

Figure 7 is a cross sectional view taken along line 7-7 of Figure 4.

Figure 8 is a rear elevational view taken along line 8-8 of Figure 7.

Figure 9 is a front elevational view of a pocket bra system constructed in accordance with another alternate embodiment of the invention.

Figure 10 is a cross sectional view taken along line 10-10 of Figure 9.

Figure 11 is a side elevational view of the pocket bra system shown in Figures 9 and 10.

Figure 12 is a cross sectional view taken along line 12-12 of Figure 11.

Figure 13 provides a view of an embodiment of a bra having a back pocket.

The same reference numerals refer to the same parts throughout the various Figures.

DESCRIPTION OF THE PREFERRED EMBODIMENT

With reference now to the drawings, and in particular to Figure 1 thereof, the preferred embodiment of the new and

Nike, Inc. v. SherryWear, LLC et al. IPR2024-01128 SherryWear, LLC Exhibit 2066 Page 26

improved pocket bra system embodying the principles and concepts of the present invention and generally designated by the reference numeral 10 will be described.

The present invention, the pocket bra system 10 is comprised of a plurality of components. Such components in their broadest context include a strap, left and right cups, a rectangular patch and a linear slit. Such components are individually configured and correlated with respect to each other so as to attain the desired objective.

First provided is a strap assembly. The strap assembly includes a generally horizontal chest strap 14. The chest strap is positionable around the chest and back of a wearer. The strap assembly includes left and right generally vertical shoulder straps 16. The shoulder straps are positionable over the shoulders of the wearer. The shoulder straps have free ends. The free ends are coupled to the chest strap adjacent to the chest of the wearer and adjacent to the back of the wearer.

A left cup 18 is provided. A similarly configured right cup 20 is provided. Each cup has an inside surface and an outside surface. The left and right cups each have an upper-most point 22. The left and right cups each have a lower-most point 24. A generally vertical axis is provided. The vertical

Nike, Inc. v. SherryWear, LLC et al. IPR2024-01128 SherryWear, LLC Exhibit 2066 Page 27

axis divides each cup into an inner hemisphere interiorly and an outer hemisphere exteriorly. The left and right cups each have an inner-most point 26. The left and right cups each have an outer-most point 28. A generally horizontal axis is provided. The horizontal axis divides each cup into an upper hemisphere above and a lower hemisphere below.

A rectangular patch 32 is provided next. The patch is operatively associated with each cup. Each patch has generally horizontal upper and lower edges. Each patch has generally vertical interior and exterior edges. The patch has a periphery. The periphery has stitching. In this manner the periphery of each patch is coupled to the inside surface of an associated cup. The majority of each patch is in the upper hemisphere. The majority of each patch is in the outer hemisphere. A rectangular chamber 34 is provided. The chamber is provided between each patch and its associated cup. The chamber is rectangular. The chamber has a height of 120 and 140 millimeters. The chamber has a width of between 60 and 70 millimeters. The pockets and the patches are fabricated of a resilient closed cell polyurethane foam. The foam has a thickness of from 2 to 4 millimeters. The patches are fabricated of an elastic fabric.

Nike, Inc. v. SherryWear, LLC et al. IPR2024-01128 SherryWear, LLC Exhibit 2066 Page 28

Further provided is a linear slit 38. The slit is provided in each patch. The slit is provided parallel with, and closely spaced from, the upper edge of each patch. Each slit has a length greater than 90 percent of the width of the chamber. An elastic band 40 is provided. The elastic band is provided within each patch. The elastic band surrounds the slit. The elastic band is adapted to return the slit to a closed orientation. The elastic band is further adapted to allow the slit to stretch to an enlarged orientation.

Provided last is a handheld electronic device 46. The handheld electronic device is positionable within the chamber. In one embodiment, the handheld electronic device has a height of 115 millimeters, plus or minus 10 percent. The handheld electronic device has a width of 59 millimeters. The handheld electronic device has a thickness of 9 millimeters plus or minus 10 percent. The slit is adapted to stretch to the open orientation when adding the handheld device to, or removing the handheld device from, the chamber. The slit is adapted to contract to the closed orientation when the handheld device is within or without the chamber. The thickness and the material of the cups and the patches are adapted to abate inward projections by the handheld devices in the chambers tending to

Nike, Inc. v. SherryWear, LLC et al. IPR2024-01128 SherryWear, LLC Exhibit 2066 Page 29

poke a user. The thickness and the material of the cups and the patches are adapted to abate outward projections by the handheld devices in the chambers tending to create unsightly projections.

An alternate embodiment 100 of the present invention is provided. An under-wire 104 is provided. The under-wire is provided beneath each cup.

A central patch 108 is provided. The central patch is provided intermediate the cups. In this manner a central chamber is formed. The central patch has horizontal upper and lower edges 110, 112. The central patch has vertical side edges 114, 116. The upper and lower edges are longer than the side edges. The central patch has a central slit 118. The central slit is provided parallel with and in proximity to the upper edge. The central chamber is adapted to receive and support keys.

An upper patch 120 is provided on each shoulder strap. The upper patches have horizontal upper and lower edges 122, 124. The upper patches have vertical side edges 126, 128. The upper and lower edges are shorter than the side edges. The upper patches each have an upper slit 130. The upper slit is provided parallel with and in proximity to the upper edge. The upper chambers are adapted to receive and support pills.

Nike, Inc. v. SherryWear, LLC et al. IPR2024-01128 SherryWear, LLC Exhibit 2066 Page 30

Figures 9 through 12 illustrate a system 200 constructed in accordance with another alternate embodiment of the invention. In such alternate embodiment, enlarged bra pockets 204 are constructed on the cups of the bra. In addition, side pockets 268 are constructed along both sides of the bra. Although only a right side pocket is illustrated, it should be understood that a similarly constructed left side pocket is preferably provided additionally.

As shown in Figures 9 and 10, there is illustrated a pocket bra system 200 for removably receiving a handheld electronic device and other objects while providing support and shape to the breasts of a wearer. The system includes a strap assembly 214. The strap assembly is formed of a chest strap 216 and shoulder straps 218.

Next provided are similarly configured left and right cups 222, 224. Each cup has inside and outside surfaces. The strap assembly is attached to the cups whereby the strap assembly adheres the cups to a wearer. Each cup has curved upper edge 226, a lower edge 228, an interior edge 230 and an exterior edge 232. Each cup has inside and outside surfaces.

A patch 236 is operatively associated with each cup. Each patch has a linear upper edge 238 and a curved lower edge 240,

Nike, Inc. v. SherryWear, LLC et al. IPR2024-01128 SherryWear, LLC Exhibit 2066 Page 31

an interior edge 242 and an exterior edge 248. Each patch has inside and outside surfaces.

Stitching 250 couples the lower, interior and exterior edges of each patch to the lower, interior and exterior edges of an associated cup. A linear opening 252 is thus formed along the upper edge of each patch. Piping 256 covers the upper edge of each patch. The upper edge of the patch and the piping are adapted to allow the patch to move away from and back toward the cup between open and closed orientations.

Pockets 260 are formed between the patches and the cups. In one embodiment, the cups are fabricated of a resilient closed cell polyurethane foam with a thickness of from 2 to 4 millimeters. In another embodiment, the patches are fabricated of a resilient closed cell polyurethane foam with a thickness of from 2 to 4 millimeters.

A handheld electronic device 46 is adapted to be placed within a pocket.

An under-wire 264 is coupled beneath each cup in a generally vertical plane.

Lastly provided is a side patch 268 forming a side pocket on each side of the chest strap. The side patches each have a horizontal upper edge 270 and a lower edge 272 and vertical side

Nike, Inc. v. SherryWear, LLC et al. IPR2024-01128 SherryWear, LLC Exhibit 2066 Page 32

edges 274. The upper and lower edges of each patch are longer than the side edges. The side patches include side stitching 276 along the lower and side edges. Thus is formed an upper opening 278 at each side patch, the pocket 268 formed between two layers of the chest strap and defined by the stitching 276.

In one embodiment, the side pocket 268 may be configured to have the upper edge 270 and top edge of the chest strap aligned or nearly aligned. In another embodiment, a pocket flap may extend from the chest strap over the upper opening 278 to form an 'envelope pocket' and thus to cover the upper opening 278. In further embodiments, the flap may be positioned on a side, bottom, or middle of the pocket, with the opening being at least partially covered by the flap when in a closed (and/or non-accessing) position. The pocket flap may be secured via hook and loop connector, button, snap, zipper, or the like to the exterior of the pocket 268, or may simply rest over the upper opening 278. In still a further embodiment, side pocket 268 may further extend at least partially into, over, or beneath the cup such that the pocket, and potentially the upper opening 278 span both part of the chest strap and part of the cup.

Fig. 13 provides a view of an embodiment of a bra having a back pocket. The present embodiment is shown as a sports bra

Nike, Inc. v. SherryWear, LLC et al. IPR2024-01128 SherryWear, LLC Exhibit 2066 Page 33

version, however it should be understood that the back pocket design may be employed on any bra, and may be positioned on the chest strap, similarly to the side pocket embodiment described above. This may be particularly useful on front-open bra designs. In the embodiment shown, two shoulder straps 306, and two sides of the chest strap 301 extend away from a central area 305. On this central area is a pocket 304. The pocket may be formed in any manner and may be defined at its boundary 302 by stitching, a separate pocket material behind the central area 305 material, or by any other structure. An opening 303 to the pocket 304 is shown at a top, but it should be understood that the opening 303 may be on the sides, middle, bottom, or anywhere on the pocket, depending on embodiment. A closure (not shown) may be used to hold the pocket in a closed position. The closure may be any structure capable of holding the pocket opening 303 in a closed position.

A final embodiment of the invention is designed to protect wearers from radio frequency emissions from electronic devices supported by the system. To achieve this protection, the left and right cups are fabricated of a radio frequency protective material. The radio frequency protective material is fabricated of a blend of fabrics chosen from the class consisting of

Nike, Inc. v. SherryWear, LLC et al. IPR2024-01128 SherryWear, LLC Exhibit 2066 Page 34

polyester and cotton and further including copper and silver. In one embodiment, the radio frequency protective material is fabricated of 78 percent of a blend of fabric chosen from the class consisting of polyester and cotton and further including 21 percent copper and 1 silver. In another embodiment, the radio frequency protective material is fabricated of 90 percent of a blend of fabric chosen from the class consisting of polyester and cotton and further including 9.5 percent copper and 0.5 silver.

As to the manner of usage and operation of the present invention, the same should be apparent from the above description. Accordingly, no further discussion relating to the manner of usage and operation will be provided.

With respect to the above description then, it is to be realized that the optimum dimensional relationships for the parts of the invention, to include variations in size, materials, shape, form, function and manner of operation, assembly and use, are deemed readily apparent and obvious to one skilled in the art, and all equivalent relationships to those illustrated in the drawings and described in the specification are intended to be encompassed by the present invention.

Nike, Inc. v. SherryWear, LLC et al. IPR2024-01128 SherryWear, LLC Exhibit 2066 Page 35

Therefore, the foregoing is considered as illustrative only of the principles of the invention. Further, since numerous modifications and changes will readily occur to those skilled in the art, it is not desired to limit the invention to the exact construction and operation shown and described, and accordingly, all suitable modifications and equivalents may be resorted to, falling within the scope of the invention.

Nike, Inc. v. SherryWear, LLC et al. IPR2024-01128 SherryWear, LLC Exhibit 2066 Page 36

Claims:

What is claimed is:

1. A pocket bra comprising:

a strap assembly including a chest strap and shoulder straps;

a left cup and a right cup, each cup having inside and outside surfaces, the strap assembly being attached to the cups whereby the strap assembly holds the cups to a wearer, with the chest strap extending from the left cup towards the wearer's back and extending from the right cup towards the wearer's back;

a side patch on one of an inside or outside surface of the chest strap adjacent to at least one of the left cup and right cups, the side patch having upper and lower edges along at least part of a length of the chest strap, and side edges, the side patch having stitching along the lower and side edges thus forming an upper opening such that each side patch forms a pocket, the upper opening capable of repeated receiving and removal of an item.

2. The bra of claim 1 wherein the cups and the patches form pockets, the cups being fabricated of a resilient closed cell polyurethane foam with a thickness of from 2 to 4 millimeters.

Nike, Inc. v. SherryWear, LLC et al. IPR2024-01128 SherryWear, LLC Exhibit 2066 Page 37

3. The bra of claim 1 wherein the patch is fabricated of a resilient closed cell polyurethane foam with a thickness of from 2 to 4 millimeters.

4. The bra of claim 1 and further including a handheld electronic device, the handheld electronic device placed within the side pocket.

5. The bra of claim 1 and further including an under-wire coupled beneath each cup in a generally vertical plane.

6. The bra of claim 1 further comprising a back pocket on a rear at least one of the two shoulder straps.

7. The bra of claim 1 wherein the side pocket further comprises a closure, the closure having a first part on the side of the chest strap, and a second part on the patch, the first part connectable to the second part to close the pocket.

8. The bra of claim 1 wherein the upper edge of the side patch is aligned with a top edge of the chest strap.

9. The bra of claim 1 further comprising a pocket flap, the pocket flap extending from the chest strap over the upper opening.

10. The bra of claim 9 further comprising a closure, the closure configured to connect the pocket flap to the side patch in a closed position.

11. The bra of claim 10 wherein the closure is a hook and loop connector.

12. The bra of claim 10 wherein the closure is a button.

13. The bra of claim 10 wherein the closure is a snap fitting.

14. The bra of claim 10 wherein the closure is a zipper.

15. The bra of claim 1 further comprising a piping attached to the upper edge of the side patch.

ABSTRACT OF THE DISCLOSURE

A strap assembly includes a chest strap and shoulder straps. Similarly configured left and right cups are provided. The strap assembly is attached to the cups whereby the strap assembly adheres the cups to a wearer. Each cup has curved upper, lower, interior and exterior edges. Each cup has inside and outside surfaces. A patch is operatively associated with each cup. Each patch has a linear upper edge and curved lower, interior and exterior edges. Each patch has inside and outside surfaces. Stitching couples the lower, interior and exterior edges of each patch to the lower, interior and exterior edges of an associated cup. A linear opening is formed along the upper edge of each patch. Piping covers the upper edge of each patch. The piping is adapted to allow the patch to move away from and back toward the cup between open and closed orientations.

Nike, Inc. v. SherryWear, LLC et al. IPR2024-01128 SherryWear, LLC Exhibit 2066 Page 40

Electronic Patent Application Fee Transmittal

Application Number:	
Filing Date:	
Title of Invention:	POCKET BRA SYSTEM
First Named Inventor/Applicant Name:	Sharon Goff
Filer:	Gary Ervery Lambert
Attorney Docket Number:	16-029-SG

Filed as Small Entity

Filing Fees for Utility under 35 USC 111(a)

Description	Fee Code	Quantity	Amount	Sub-Total in USD($)
Basic Filing:				
Utility filing Fee (Electronic filing)	4011	1	70	70
Utility Search Fee	2111	1	300	300
Utility Examination Fee	2311	1	360	360
Pages:				
Claims:				
Miscellaneous-Filing:				
Petition:				
Patent-Appeals-and-Interference:				

Description	Fee Code	Quantity	Amount	Sub-Total in USD($)
Post-Allowance-and-Post-Issuance:				
Extension-of-Time:				
Miscellaneous:				
			Total in USD ($)	**730**

Electronic Acknowledgement Receipt

EFS ID:	24935877
Application Number:	15045592
International Application Number:	
Confirmation Number:	3326
Title of Invention:	POCKET BRA SYSTEM
First Named Inventor/Applicant Name:	Sharon Goff
Customer Number:	32118
Filer:	Gary Ervery Lambert
Filer Authorized By:	
Attorney Docket Number:	16-029-SG
Receipt Date:	17-FEB-2016
Filing Date:	
Time Stamp:	13:48:03
Application Type:	Utility under 35 USC 111(a)

Payment information:

Submitted with Payment	yes
Payment Type	Credit Card
Payment was successfully received in RAM	$730
RAM confirmation Number	12870
Deposit Account	
Authorized User	

The Director of the USPTO is hereby authorized to charge indicated fees and credit any overpayment as follows:

File Listing:

Document Number	Document Description	File Name	File Size(Bytes)/ Message Digest	Multi Part /.zip	Pages (if appl.)
1	Application Data Sheet	ADS.pdf	1503641 99df812956e6d3bf2dac9d3df74d64da7c867114	no	6
Warnings:					
Information:					
2	Information Disclosure Statement (IDS) Form (SB08)	IDS.pdf	612205 127df300b605c9413a42bd42180543e76184031b	no	4
Warnings:					
Information:					
3	Power of Attorney	POA.pdf	197357 7c26d0c3ed6fc193d148af6a42c20121455463fc	no	3
Warnings:					
Information:					
4	Oath or Declaration filed	Declaration_AIA08.pdf	189039 20b74af778fa8456ae1db44166eee78313514377	no	3
Warnings:					
Information:					
5	Drawings-only black and white line drawings	16-029-SG-SG2-Drawings.pdf	2257630 302fc6e31b4c05eb764ae900c1bcf7cf306251bf	no	7
Warnings:					
Information:					
6		Side-pocket-con-Application.pdf	55790 1e6bc97ba5994de6dc8e10b21d0a04cece498bc3	yes	22

Multipart Description/PDF files in .zip description

Document Description	Start	End
Specification	1	18
Claims	19	21
Abstract	22	22

Warnings:					
Information:					
7	Fee Worksheet (SB06)	fee-info.pdf	34849 28cd5e44d00b529c72af38e6db57ef59f19d0768	no	2
Warnings:					
Information:					
			Total Files Size (in bytes):	4850511	

This Acknowledgement Receipt evidences receipt on the noted date by the USPTO of the indicated documents, characterized by the applicant, and including page counts, where applicable. It serves as evidence of receipt similar to a Post Card, as described in MPEP 503.

New Applications Under 35 U.S.C. 111
If a new application is being filed and the application includes the necessary components for a filing date (see 37 CFR 1.53(b)-(d) and MPEP 506), a Filing Receipt (37 CFR 1.54) will be issued in due course and the date shown on this Acknowledgement Receipt will establish the filing date of the application.

National Stage of an International Application under 35 U.S.C. 371
If a timely submission to enter the national stage of an international application is compliant with the conditions of 35 U.S.C. 371 and other applicable requirements a Form PCT/DO/EO/903 indicating acceptance of the application as a national stage submission under 35 U.S.C. 371 will be issued in addition to the Filing Receipt, in due course.

New International Application Filed with the USPTO as a Receiving Office
If a new international application is being filed and the international application includes the necessary components for an international filing date (see PCT Article 11 and MPEP 1810), a Notification of the International Application Number and of the International Filing Date (Form PCT/RO/105) will be issued in due course, subject to prescriptions concerning national security, and the date shown on this Acknowledgement Receipt will establish the international filing date of the application.

Under the Paperwork Reduction Act of 1995, no persons are required to respond to a collection of information unless it contains a valid OMB control number.

Application Data Sheet 37 CFR 1.76	Attorney Docket Number	16-029-SG
	Application Number	
Title of Invention	POCKET BRA SYSTEM	

The application data sheet is part of the provisional or nonprovisional application for which it is being submitted. The following form contains the bibliographic data arranged in a format specified by the United States Patent and Trademark Office as outlined in 37 CFR 1.76.
This document may be completed electronically and submitted to the Office in electronic format using the Electronic Filing System (EFS) or the document may be printed and included in a paper filed application.

Secrecy Order 37 CFR 5.2

☐ Portions or all of the application associated with this Application Data Sheet may fall under a Secrecy Order pursuant to 37 CFR 5.2 (Paper filers only. Applications that fall under Secrecy Order may not be filed electronically.)

Inventor Information:

Inventor 1 Remove

Legal Name

Prefix	Given Name	Middle Name	Family Name	Suffix
	Sharon		Goff	

Residence Information (Select One) ● US Residency Non US Residency Active US Military Service

City	Hilton Head	State/Province	SC	Country of Residence i	US

Mailing Address of Inventor:

Address 1	24 Wood Duck Court		
Address 2			
City	Hilton Head	State/Province	SC
Postal Code	29928	Country i	US

All Inventors Must Be Listed - Additional Inventor Information blocks may be generated within this form by selecting the **Add** button. Add

Correspondence Information:

Enter either Customer Number or complete the Correspondence Information section below.
For further information see 37 CFR 1.33(a).

☐ **An Address is being provided for the correspondence Information of this application.**

Customer Number	32118		
Email Address		Add Email	Remove Email

Application Information:

Title of the Invention	POCKET BRA SYSTEM		
Attorney Docket Number	16-029-SG	Small Entity Status Claimed	☒
Application Type	Nonprovisional		
Subject Matter	Utility		
Total Number of Drawing Sheets (if any)		Suggested Figure for Publication (if any)	

Under the Paperwork Reduction Act of 1995, no persons are required to respond to a collection of information unless it contains a valid OMB control number.

Application Data Sheet 37 CFR 1.76	Attorney Docket Number	16-029-SG
	Application Number	
Title of Invention	POCKET BRA SYSTEM	

Publication Information:

☐ Request Early Publication (Fee required at time of Request 37 CFR 1.219)

☒ **Request Not to Publish.** I hereby request that the attached application not be published under 35 U.S.C. 122(b) and certify that the invention disclosed in the attached application **has not and will not** be the subject of an application filed in another country, or under a multilateral international agreement, that requires publication at eighteen months after filing.

Representative Information:

Representative information should be provided for all practitioners having a power of attorney in the application. Providing this information in the Application Data Sheet does not constitute a power of attorney in the application (see 37 CFR 1.32).
Either enter Customer Number or complete the Representative Name section below. If both sections are completed the customer Number will be used for the Representative Information during processing.

Please Select One:	● Customer Number	US Patent Practitioner	◯ Limited Recognition (37 CFR 11.9)
Customer Number	32118		

Domestic Benefit/National Stage Information:

This section allows for the applicant to either claim benefit under 35 U.S.C. 119(e), 120, 121, or 365(c) or indicate National Stage entry from a PCT application. Providing this information in the application data sheet constitutes the specific reference required by 35 U.S.C. 119(e) or 120, and 37 CFR 1.78.

Prior Application Status	Pending		Remove
Application Number	Continuity Type	Prior Application Number	Filing Date (YYYY-MM-DD)
	Continuation of	14614873	2015-02-15
Prior Application Status	Pending		Remove
Application Number	Continuity Type	Prior Application Number	Filing Date (YYYY-MM-DD)
14614873	Continuation in part of	14082777	2013-11-18
Prior Application Status	Patented		Remove

Application Number	Continuity Type	Prior Application Number	Filing Date (YYYY-MM-DD)	Patent Number	Issue Date (YYYY-MM-DD)
14082777	Continuation in part of	13066822	2011-04-26	8597072	2013-12-03

Prior Application Status	Pending		Remove
Application Number	Continuity Type	Prior Application Number	Filing Date (YYYY-MM-DD)
14614873	non provisional of	61976379	2014-04-07

Additional Domestic Benefit/National Stage Data may be generated within this form by selecting the **Add** button. Add

Foreign Priority Information:

Nike, Inc. v. SherryWear, LLC et al. IPR2024-01128 SherryWear, LLC Exhibit 2066 Page 47

Under the Paperwork Reduction Act of 1995, no persons are required to respond to a collection of information unless it contains a valid OMB control number.

Application Data Sheet 37 CFR 1.76	Attorney Docket Number	16-029-SG
	Application Number	
Title of Invention	POCKET BRA SYSTEM	

This section allows for the applicant to claim priority to a foreign application. Providing this information in the application data sheet constitutes the claim for priority as required by 35 U.S.C. 119(b) and 37 CFR 1.55(d). When priority is claimed to a foreign application that is eligible for retrieval under the priority document exchange program (PDX)[i] the information will be used by the Office to automatically attempt retrieval pursuant to 37 CFR 1.55(h)(1) and (2). Under the PDX program, applicant bears the ultimate responsibility for ensuring that a copy of the foreign application is received by the Office from the participating foreign intellectual property office, or a certified copy of the foreign priority application is filed, within the time period specified in 37 CFR 1.55(g)(1).

Remove

Application Number	Country[i]	Filing Date (YYYY-MM-DD)	Access Code[i] (if applicable)

Additional Foreign Priority Data may be generated within this form by selecting the **Add** button. Add

Statement under 37 CFR 1.55 or 1.78 for AIA (First Inventor to File) Transition Applications

X This application (1) claims priority to or the benefit of an application filed before March 16, 2013 and (2) also contains, or contained at any time, a claim to a claimed invention that has an effective filing date on or after March 16, 2013.

Authorization to Permit Access:

Authorization to Permit Access to the Instant Application by the Participating Offices

If checked, the undersigned hereby grants the USPTO authority to provide the European Patent Office (EPO), the Japan Patent Office (JPO), the Korean Intellectual Property Office (KIPO), the World Intellectual Property Office (WIPO), and any other intellectual property offices in which a foreign application claiming priority to the instant patent application is filed access to the instant patent application. See 37 CFR 1.14(c) and (h). This box should not be checked if the applicant does not wish the EPO, JPO, KIPO, WIPO, or other intellectual property office in which a foreign application claiming priority to the instant patent application is filed to have access to the instant patent application.

In accordance with 37 CFR 1.14(h)(3), access will be provided to a copy of the instant patent application with respect to: 1) the instant patent application-as-filed; 2) any foreign application to which the instant patent application claims priority under 35 U.S.C. 119(a)-(d) if a copy of the foreign application that satisfies the certified copy requirement of 37 CFR 1.55 has been filed in the instant patent application; and 3) any U.S. application-as-filed from which benefit is sought in the instant patent application.

In accordance with 37 CFR 1.14(c), access may be provided to information concerning the date o f filing this Authorization.

Under the Paperwork Reduction Act of 1995, no persons are required to respond to a collection of information unless it contains a valid OMB control number.

Application Data Sheet 37 CFR 1.76	Attorney Docket Number	16-029-SG
	Application Number	
Title of Invention	POCKET BRA SYSTEM	

Applicant Information:

Providing assignment information in this section does not substitute for compliance with any requirement of part 3 of Title 37 of CFR to have an assignment recorded by the Office.

Applicant 1 Remove

If the applicant is the inventor (or the remaining joint inventor or inventors under 37 CFR 1.45), this section should not be completed. The information to be provided in this section is the name and address of the legal representative who is the applicant under 37 CFR 1.43; or the name and address of the assignee, person to whom the inventor is under an obligation to assign the invention, or person who otherwise shows sufficient proprietary interest in the matter who is the applicant under 37 CFR 1.46. If the applicant is an applicant under 37 CFR 1.46 (assignee, person to whom the inventor is obligated to assign, or person who otherwise shows sufficient proprietary interest) together with one or more joint inventors, then the joint inventor or inventors who are also the applicant should be identified in this section. Clear

Assignee	Legal Representative under 35 U.S.C. 117	Joint Inventor
Person to whom the inventor is obligated to assign.	Person who shows sufficient proprietary interest	

If applicant is the legal representative, indicate the authority to file the patent application, the inventor is:

Name of the Deceased or Legally Incapacitated Inventor :

If the Applicant is an Organization check here. ☐

Prefix	Given Name	Middle Name	Family Name	Suffix

Mailing Address Information For Applicant:

Address 1			
Address 2			
City		**State/Province**	
Country		Postal Code	
Phone Number		Fax Number	
Email Address			

Additional Applicant Data may be generated within this form by selecting the Add button. Add

Non-Applicant Assignee Information:

Providing assignment information in this section does not subsitute for compliance with any requirement of part 3 of Title 37 of CFR to have an assignment recorded by the Office.

Under the Paperwork Reduction Act of 1995, no persons are required to respond to a collection of information unless it contains a valid OMB control number.

Application Data Sheet 37 CFR 1.76	Attorney Docket Number	16-029-SG
	Application Number	
Title of Invention	POCKET BRA SYSTEM	

Assignee 1

Complete this section only if non-applicant assignee information is desired to be included on the patent application publication in accordance with 37 CFR 1.215(b). Do not include in this section an applicant under 37 CFR 1.46 (assignee, person to whom the inventor is obligated to assign, or person who otherwise shows sufficient proprietary interest), as the patent application publication will include the name of the applicant(s).

Remove

If the Assignee is an Organization check here. ☒

Organization Name	SherryWear LLC

Mailing Address Information For Non-Applicant Assignee:

Address 1	24 Wood Duck Ct.		
Address 2			
City	Hilton Head	**State/Province**	SC
Country i	US	Postal Code	29928
Phone Number		Fax Number	
Email Address			

Additional Assignee Data may be generated within this form by selecting the Add button. Add

Signature:

Remove

NOTE: This form must be signed in accordance with 37 CFR 1.33. See 37 CFR 1.4 for signature requirements and certifications.

Signature	/David J. Connaughton, Jr./			Date (YYYY-MM-DD)	2016-02-16
First Name	David	Last Name	Connaughton	Registration Number	67275

Additional Signature may be generated within this form by selecting the Add button. Add

This collection of information is required by 37 CFR 1.76. The information is required to obtain or retain a benefit by the public which is to file (and by the USPTO to process) an application. Confidentiality is governed by 35 U.S.C. 122 and 37 CFR 1.14. This collection is estimated to take 23 minutes to complete, including gathering, preparing, and submitting the completed application data sheet form to the USPTO. Time will vary depending upon the individual case. Any comments on the amount of time you require to complete this form and/or suggestions for reducing this burden, should be sent to the Chief Information Officer, U.S. Patent and Trademark Office, U.S. Department of Commerce, P.O. Box 1450, Alexandria, VA 22313-1450. DO NOT SEND FEES OR COMPLETED FORMS TO THIS ADDRESS. **SEND TO: Commissioner for Patents, P.O. Box 1450, Alexandria, VA 22313-1450.**

Privacy Act Statement

The Privacy Act of 1974 (P.L. 93-579) requires that you be given certain information in connection with your submission of the attached form related to a patent application or patent. Accordingly, pursuant to the requirements of the Act, please be advised that: (1) the general authority for the collection of this information is 35 U.S.C. 2(b)(2); (2) furnishing of the information solicited is voluntary; and (3) the principal purpose for which the information is used by the U.S. Patent and Trademark Office is to process and/or examine your submission related to a patent application or patent. If you do not furnish the requested information, the U.S. Patent and Trademark Office may not be able to process and/or examine your submission, which may result in termination of proceedings or abandonment of the application or expiration of the patent.

The information provided by you in this form will be subject to the following routine uses:

1. The information on this form will be treated confidentially to the extent allowed under the Freedom of Information Act (5 U.S.C. 552) and the Privacy Act (5 U.S.C. 552a). Records from this system of records may be disclosed to the Department of Justice to determine whether the Freedom of Information Act requires disclosure of these records.

2. A record from this system of records may be disclosed, as a routine use, in the course of presenting evidence to a court, magistrate, or administrative tribunal, including disclosures to opposing counsel in the course of settlement negotiations.

3. A record in this system of records may be disclosed, as a routine use, to a Member of Congress submitting a request involving an individual, to whom the record pertains, when the individual has requested assistance from the Member with respect to the subject matter of the record.

4. A record in this system of records may be disclosed, as a routine use, to a contractor of the Agency having need for the information in order to perform a contract. Recipients of information shall be required to comply with the requirements of the Privacy Act of 1974, as amended, pursuant to 5 U.S.C. 552a(m).

5. A record related to an International Application filed under the Patent Cooperation Treaty in this system of records may be disclosed, as a routine use, to the International Bureau of the World Intellectual Property Organization, pursuant to the Patent Co o p eration Treaty.

6. A record in this system of records may be disclosed, as a routine use, to another federal agency for purposes of National Security review (35 U.S.C. 181) and for review pursuant to the Atomic Energy Act (42 U.S.C. 218(c)).

7. A record from this system of records may be disclosed, as a routine use, to the Administrator, General Services, or his/her designee, during an inspection of records conducted by GSA as part of that agency's responsibility to recommend improvements in records management practices and programs, under authority of 44 U.S.C. 2904 and 2906. Such disclosure shall be made in accordance with the GSA regulations governing inspection of records for this purpose, and any other relevant (i.e., GSA or Commerce) directive. Such disclosure shall not be used to make determinations about individuals.

8. A record from this system of records may be disclosed, as a routine use, to the public after either publication of the application pursuant to 35 U.S.C. 122(b) or issuance of a patent pursuant to 35 U.S.C. 151. Further, a record may be disclosed, subject to the limitations of 37 CFR 1.14, as a routine use, to the public if the record was filed in an application which became abandoned or in which the proceedings were terminated and which application is referenced by either a published application, an application open to public inspections or an issued patent.

9. A record from this system of records may be disclosed, as a routine use, to a Federal, State, or local law enforcement agency, if the USPTO becomes aware of a violation or potential violation of law or regulation.

PATENT ASSIGNMENT COVER SHEET

Electronic Version v1.1
Stylesheet Version v1.2

EPAS ID: PAT3744434

SUBMISSION TYPE:	NEW ASSIGNMENT
NATURE OF CONVEYANCE:	ASSIGNMENT

CONVEYING PARTY DATA

Name	Execution Date
SHARON GOFF	02/17/2016

RECEIVING PARTY DATA

Name:	SHERRYWEAR LLC
Street Address:	24 WOOD DUCK COURT
City:	HILTON HEAD ISLAND
State/Country:	SOUTH CAROLINA
Postal Code:	29928

PROPERTY NUMBERS Total: 2

Property Type	Number
Application Number:	15045592
Application Number:	15045606

CORRESPONDENCE DATA

Fax Number: (617)720-0091

Correspondence will be sent to the e-mail address first; if that is unsuccessful, it will be sent using a fax number, if provided; if that is unsuccessful, it will be sent via US Mail.

Phone: 6177200091
Email: connaughton@lambertpatentlaw.com
Correspondent Name: DAVID J. CONNAUGHTON, JR.
Address Line 1: 92 STATE STREET
Address Line 2: SUITE 200
Address Line 4: BOSTON, MASSACHUSETTS 02109

ATTORNEY DOCKET NUMBER:	16-029-SG
NAME OF SUBMITTER:	DAVID J. CONNAUGHTON, JR.
SIGNATURE:	/David J. Connaughton, Jr./
DATE SIGNED:	02/18/2016
	This document serves as an Oath/Declaration (37 CFR 1.63).

Total Attachments: 2
source=SIGNED2-16-16-Assignment-pending-cons-SherryWear-LLC#page1.tif
source=SIGNED2-16-16-Assignment-pending-cons-SherryWear-LLC#page2.tif

ASSIGNMENT OF U.S. PATENT APPLICATION

Whereas I, Sharon Goff, who resides at 24 Wood Duck Ct. Hilton Head, SC 29928, am the sole inventor and the sole owner of the entire right, title, and interest in the inventions and discoveries as set forth and identified by U.S. Application Number 15/045,592, filed February 17, 2016, and U.S. Application Number 15/045,606, filed on February 17, 2016; and

Whereas SherryWear LLC having its principal place of business at 24 Wood Duck Ct. Hilton Head, SC 29928, together with its successors and assigns (hereinafter referred to as "the Assignee") is desirous of acquiring the entire right, title and interest in and to said inventions and discoveries as set forth and described in U.S. Application Number 15/045,592, and U.S. Application Number 15/045,606, including the full interest of above-mentioned Assignor, and any continuations, divisions, extensions, substitutions, reissues and reexaminations thereof;

Now, therefore, to all whom it may concern, be it known, that the Assignor, for good and valuable consideration, receipt and sufficiency of which is hereby acknowledged and other valuable consideration furnished by Assignee to Assignor, Assignor hereby, without reservation:

1. Assign, transfer, and convey to the Assignee the entire right, title, and interest in and to said inventions and discoveries and any and all improvements thereon, including said Patent Application, any and all other applications for patent on said inventions and discoveries in whatsoever countries, including but not limited to all divisional, continuation, continuation-in-part, foreign filing and PCT applications based in whole or in part upon said inventions and discoveries, or any and all issued patents, reissues, reexaminations, and extensions of Patent Application granted for said inventions and discoveries, and every priority right that is or may be predicted upon or arise from said inventions, said discoveries, and said Patent Application, as fully and entirely as the same would have been held and enjoyed by Assignor if this Assignment had not been made, together with all claims for damages by reason of past infringement of an issued patent issuing from said Patent Application, with the right to sue for and collect the same for Assignee's own use, and for the use of Assignee's successors, assigns, or other legal representatives;

2. Authorize the Assignee to file patent applications in any or all countries on any or all of said inventions and discoveries in the Assignor's names or in the names of the Assignee or otherwise as the Assignee may deem advisable, under any treaties and conventions or otherwise;

3. Authorize and requests the Commissioner of Patents and Trademarks of the United States of America and the empowered officials of all other governments to issue or transfer said Patent Application to the Assignee, as assignee of the entire right, title, and interest therein or otherwise as the Assignee may direct;

4. Warrant that the Assignor has not knowingly conveyed to others any right in said inventions, discoveries, applications or patents or any license to use the same or to make, use, or sell anything embodying or utilizing any of said inventions or discoveries; and that the Assignor has good right to assign the Assignee without encumbrances;

5. Bind the Assignor's heirs, legal representatives and assigns, as well as the Assignor, to do, upon the Assignee's request and at the Assignee's expense, but without additional consideration to the Assignor or the Assignor's heirs, legal representatives and assigns, all acts reasonably serving to assure that the said inventions and discoveries, the said Patent Application shall be held and enjoyed by the Assignee as fully and entirely as the same could have been held and enjoyed by the Assignor or the Assignor's heirs, legal representatives, and assigns if this assignment had not been made; and particularly to execute and deliver to the Assignee all lawful application documents including petitions, specifications, and oaths, and all assignments, disclaimers, and lawful affidavits in form and substance as may be requested by the Assignee; to communicate to the Assignee all facts known to the Assignor relating to said inventions and discoveries or the history thereof, and to furnish the Assignee with any and all documents, photographs, models, samples, and other physical exhibits in the Assignor's control or in the control of the Assignor's heirs, legal representatives or assigns which may be useful for establishing the facts of the Assignor's conceptions, disclosures, and reduction to practice of said inventions and discoveries.

6. The assignment includes the Assignor's right in and to all income, royalties, damages and payments now or hereafter due or payable with respect to any Letters Patent which may be granted, and in and to all causes of action (either in law or in equity), and the right to sue, counterclaim, and recover for past, present and future infringement of the rights assigned or to be assigned under this Assignment, as fully and entirely as the same would have been held and enjoyed by Assignor if this sale and assignment had not been made

7. This Agreement, contains the entire understanding and agreement between the parties hereto with respect to its subject matter and supersedes any prior or contemporaneous written or oral agreements, representations or warranties between them respecting the subject matter hereof.

8. Assignee agrees to perform any further acts and execute and deliver any documents that may be reasonably necessary to carry out the provisions of this Agreement.

Executed this _____17th_____ day of _____February_____, 2016

___/Sharon Goff_/_____Assignor

PATENT APPLICATION FEE DETERMINATION RECORD

Substitute for Form PTO-875

Application or Docket Number
15/045,592

APPLICATION AS FILED - PART I

FOR	(Column 1) NUMBER FILED	(Column 2) NUMBER EXTRA	SMALL ENTITY RATE($)	SMALL ENTITY FEE($)	OR	OTHER THAN SMALL ENTITY RATE($)	OTHER THAN SMALL ENTITY FEE($)
BASIC FEE (37 CFR 1.16(a), (b), or (c))	N/A	N/A	N/A	70		N/A	
SEARCH FEE (37 CFR 1.16(k), (i), or (m))	N/A	N/A	N/A	300		N/A	
EXAMINATION FEE (37 CFR 1.16(o), (p), or (q))	N/A	N/A	N/A	360		N/A	
TOTAL CLAIMS (37 CFR 1.16(i))	15 minus 20 =	*	x 40 =	0.00	OR		
INDEPENDENT CLAIMS (37 CFR 1.16(h))	1 minus 3 =	*	x 210 =	0.00			
APPLICATION SIZE FEE (37 CFR 1.16(s))	If the specification and drawings exceed 100 sheets of paper, the application size fee due is $310 ($155 for small entity) for each additional 50 sheets or fraction thereof. See 35 U.S.C. 41(a)(1)(G) and 37 CFR 1.16(s).			0.00			
MULTIPLE DEPENDENT CLAIM PRESENT (37 CFR 1.16(j))				0.00			
* If the difference in column 1 is less than zero, enter "0" in column 2.			TOTAL	730		TOTAL	

APPLICATION AS AMENDED - PART II

		(Column 1) CLAIMS REMAINING AFTER AMENDMENT		(Column 2) HIGHEST NUMBER PREVIOUSLY PAID FOR	(Column 3) PRESENT EXTRA	SMALL ENTITY RATE($)	SMALL ENTITY ADDITIONAL FEE($)	OR	OTHER THAN SMALL ENTITY RATE($)	OTHER THAN SMALL ENTITY ADDITIONAL FEE($)
AMENDMENT A	Total (37 CFR 1.16(i))	*	Minus	**	=	x =		OR	x =	
AMENDMENT A	Independent (37 CFR 1.16(h))	*	Minus	***	=	x =		OR	x =	
AMENDMENT A	Application Size Fee (37 CFR 1.16(s))									
AMENDMENT A	FIRST PRESENTATION OF MULTIPLE DEPENDENT CLAIM (37 CFR 1.16(j))							OR		
						TOTAL ADD'L FEE		OR	TOTAL ADD'L FEE	

		(Column 1) CLAIMS REMAINING AFTER AMENDMENT		(Column 2) HIGHEST NUMBER PREVIOUSLY PAID FOR	(Column 3) PRESENT EXTRA	RATE($)	ADDITIONAL FEE($)		RATE($)	ADDITIONAL FEE($)
AMENDMENT B	Total (37 CFR 1.16(i))	*	Minus	**	=	x =		OR	x =	
AMENDMENT B	Independent (37 CFR 1.16(h))	*	Minus	***	=	x =		OR	x =	
AMENDMENT B	Application Size Fee (37 CFR 1.16(s))									
AMENDMENT B	FIRST PRESENTATION OF MULTIPLE DEPENDENT CLAIM (37 CFR 1.16(j))							OR		
						TOTAL ADD'L FEE		OR	TOTAL ADD'L FEE	

* If the entry in column 1 is less than the entry in column 2, write "0" in column 3.
** If the "Highest Number Previously Paid For" IN THIS SPACE is less than 20, enter "20".
*** If the "Highest Number Previously Paid For" IN THIS SPACE is less than 3, enter "3".
The "Highest Number Previously Paid For" (Total or Independent) is the highest found in the appropriate box in column 1.

UNITED STATES PATENT AND TRADEMARK OFFICE

UNITED STATES DEPARTMENT OF COMMERCE
United States Patent and Trademark Office
Address: COMMISSIONER FOR PATENTS
P.O. Box 1450
Alexandria, Virginia 22313-1450
www.uspto.gov

APPLICATION NUMBER	FILING or 371(c) DATE	GRP ART UNIT	FIL FEE REC'D	ATTY.DOCKET.NO	TOT CLAIMS	IND CLAIMS
15/045,592	02/17/2016	3765	730	16-029-SG	15	1

CONFIRMATION NO. 3326

32118
LAMBERT & ASSOCIATES
92 STATE STREET
BOSTON, MA 02109-2004

FILING RECEIPT

OC000000081076083

Date Mailed: 03/03/2016

Receipt is acknowledged of this non-provisional patent application. The application will be taken up for examination in due course. Applicant will be notified as to the results of the examination. Any correspondence concerning the application must include the following identification information: the U.S. APPLICATION NUMBER, FILING DATE, NAME OF APPLICANT, and TITLE OF INVENTION. Fees transmitted by check or draft are subject to collection. Please verify the accuracy of the data presented on this receipt. **If an error is noted on this Filing Receipt, please submit a written request for a Filing Receipt Correction. Please provide a copy of this Filing Receipt with the changes noted thereon. If you received a "Notice to File Missing Parts" for this application, please submit any corrections to this Filing Receipt with your reply to the Notice. When the USPTO processes the reply to the Notice, the USPTO will generate another Filing Receipt incorporating the requested corrections**

Inventor(s)

Sharon Goff, Hilton Head, SC;

Applicant(s)

Sharon Goff, Hilton Head, SC;

Assignment For Published Patent Application

SherryWear LLC, Hilton Head, SC

Power of Attorney: The patent practitioners associated with Customer Number 32118

Domestic Priority data as claimed by applicant

This application is a CON of 14/614,873 02/05/2015 PAT 9289016 *
which is a CIP of 14/082,777 11/18/2013
which is a CIP of 13/066,822 04/26/2011 PAT 8597072
and said 14/614,873 02/05/2015
claims benefit of 61/976,379 04/07/2014
(*)Data provided by applicant is not consistent with PTO records.

Foreign Applications for which priority is claimed (You may be eligible to benefit from the **Patent Prosecution Highway** program at the USPTO. Please see http://www.uspto.gov for more information.) - None.
Foreign application information must be provided in an Application Data Sheet in order to constitute a claim to foreign priority. See 37 CFR 1.55 and 1.76.

Permission to Access Application via Priority Document Exchange: No

Permission to Access Search Results: No

Nike, Inc. v. SherryWear, LLC et al. IPR2024-01128 SherryWear, LLC Exhibit 2066 Page 56

Applicant may provide or rescind an authorization for access using Form PTO/SB/39 or Form PTO/SB/69 as appropriate.

If Required, Foreign Filing License Granted: 03/01/2016

The country code and number of your priority application, to be used for filing abroad under the Paris Convention, is **US 15/045,592**

Projected Publication Date: Request for Non-Publication Acknowledged

Non-Publication Request: Yes

Early Publication Request: No
**** SMALL ENTITY ****
Title

POCKET BRA SYSTEM

Preliminary Class

450

Statement under 37 CFR 1.55 or 1.78 for AIA (First Inventor to File) Transition Applications: Yes

PROTECTING YOUR INVENTION OUTSIDE THE UNITED STATES

Since the rights granted by a U.S. patent extend only throughout the territory of the United States and have no effect in a foreign country, an inventor who wishes patent protection in another country must apply for a patent in a specific country or in regional patent offices. Applicants may wish to consider the filing of an international application under the Patent Cooperation Treaty (PCT). An international (PCT) application generally has the same effect as a regular national patent application in each PCT-member country. The PCT process **simplifies** the filing of patent applications on the same invention in member countries, but **does not result** in a grant of "an international patent" and does not eliminate the need of applicants to file additional documents and fees in countries where patent protection is desired.

Almost every country has its own patent law, and a person desiring a patent in a particular country must make an application for patent in that country in accordance with its particular laws. Since the laws of many countries differ in various respects from the patent law of the United States, applicants are advised to seek guidance from specific foreign countries to ensure that patent rights are not lost prematurely.

Applicants also are advised that in the case of inventions made in the United States, the Director of the USPTO must issue a license before applicants can apply for a patent in a foreign country. The filing of a U.S. patent application serves as a request for a foreign filing license. The application's filing receipt contains further information and guidance as to the status of applicant's license for foreign filing.

Applicants may wish to consult the USPTO booklet, "General Information Concerning Patents" (specifically, the section entitled "Treaties and Foreign Patents") for more information on timeframes and deadlines for filing foreign patent applications. The guide is available either by contacting the USPTO Contact Center at 800-786-9199, or it can be viewed on the USPTO website at http://www.uspto.gov/web/offices/pac/doc/general/index.html.

For information on preventing theft of your intellectual property (patents, trademarks and copyrights), you may wish to consult the U.S. Government website, http://www.stopfakes.gov. Part of a Department of Commerce initiative, this website includes self-help "toolkits" giving innovators guidance on how to protect intellectual property in specific

countries such as China, Korea and Mexico. For questions regarding patent enforcement issues, applicants may call the U.S. Government hotline at 1-866-999-HALT (1-866-999-4258).

LICENSE FOR FOREIGN FILING UNDER

Title 35, United States Code, Section 184

Title 37, Code of Federal Regulations, 5.11 & 5.15

GRANTED

The applicant has been granted a license under 35 U.S.C. 184, if the phrase "IF REQUIRED, FOREIGN FILING LICENSE GRANTED" followed by a date appears on this form. Such licenses are issued in all applications where the conditions for issuance of a license have been met, regardless of whether or not a license may be required as set forth in 37 CFR 5.15. The scope and limitations of this license are set forth in 37 CFR 5.15(a) unless an earlier license has been issued under 37 CFR 5.15(b). The license is subject to revocation upon written notification. The date indicated is the effective date of the license, unless an earlier license of similar scope has been granted under 37 CFR 5.13 or 5.14.

This license is to be retained by the licensee and may be used at any time on or after the effective date thereof unless it is revoked. This license is automatically transferred to any related applications(s) filed under 37 CFR 1.53(d). This license is not retroactive.

The grant of a license does not in any way lessen the responsibility of a licensee for the security of the subject matter as imposed by any Government contract or the provisions of existing laws relating to espionage and the national security or the export of technical data. Licensees should apprise themselves of current regulations especially with respect to certain countries, of other agencies, particularly the Office of Defense Trade Controls, Department of State (with respect to Arms, Munitions and Implements of War (22 CFR 121-128)); the Bureau of Industry and Security, Department of Commerce (15 CFR parts 730-774); the Office of Foreign AssetsControl, Department of Treasury (31 CFR Parts 500+) and the Department of Energy.

NOT GRANTED

No license under 35 U.S.C. 184 has been granted at this time, if the phrase "IF REQUIRED, FOREIGN FILING LICENSE GRANTED" DOES NOT appear on this form. Applicant may still petition for a license under 37 CFR 5.12, if a license is desired before the expiration of 6 months from the filing date of the application. If 6 months has lapsed from the filing date of this application and the licensee has not received any indication of a secrecy order under 35 U.S.C. 181, the licensee may foreign file the application pursuant to 37 CFR 5.15(b).

SelectUSA

The United States represents the largest, most dynamic marketplace in the world and is an unparalleled location for business investment, innovation, and commercialization of new technologies. The U.S. offers tremendous resources and advantages for those who invest and manufacture goods here. Through SelectUSA, our nation works to promote and facilitate business investment. SelectUSA provides information assistance to the international investor community; serves as an ombudsman for existing and potential investors; advocates on behalf of U.S. cities, states, and regions competing for global investment; and counsels U.S. economic development organizations on investment attraction best practices. To learn more about why the United States is the best country in the world to develop

technology, manufacture products, deliver services, and grow your business, visit http://www.SelectUSA.gov or call +1-202-482-6800.

To: lambert@lambertpatentlaw.com,shortell@lambertpatentlaw.com,connaughton@lambertpatentlaw.com
From: PAIR_eOfficeAction@uspto.gov
Cc: PAIR_eOfficeAction@uspto.gov
Subject: Private PAIR Correspondence Notification for Customer Number 32118

Mar 03, 2016 05:46:23 AM

Dear PAIR Customer:

LAMBERT & ASSOCIATES
92 STATE STREET
BOSTON, MA 02109-2004
UNITED STATES

The following USPTO patent application(s) associated with your Customer Number, 32118 , have new outgoing correspondence. This correspondence is now available for viewing in Private PAIR.

The official date of notification of the outgoing correspondence will be indicated on the form PTOL-90 accompanying the correspondence.

Disclaimer:
The list of documents shown below is provided as a courtesy and is not part of the official file wrapper. The content of the images shown in PAIR is the official record.

Application	Document	Mailroom Date	Attorney Docket No.
15045592	APP.FILE.REC	03/03/2016	16-029-SG

To view your correspondence online or update your email addresses, please visit us anytime at https://sportal.uspto.gov/secure/myportal/privatepair.

If you have any questions, please email the Electronic Business Center (EBC) at EBC@uspto.gov with 'e-Office Action' on the subject line or call 1-866-217-9197 during the following hours:

Monday - Friday 6:00 a.m. to 12:00 a.m.

Thank you for prompt attention to this notice,

UNITED STATES PATENT AND TRADEMARK OFFICE

PATENT APPLICATION INFORMATION RETRIEVAL SYSTEM

Docket No. 16-029-SG

UNITED STATES PATENT AND TRADEMARK OFFICE

Serial No.: 15/045,592

Applicant: Sharon Goff

Art Unit: Not Yet Known

Filing date: February 17, 2016 Examiner: Not Yet Known

Lambert & Associates
92 State Street
Boston, MA 02109

Preliminary Amendment

Prior to examination, please make the following amendments to the above-identified application. No new matter has been added.

Respectfully submitted,

/David J. Connaughton, Jr./
David J. Connaughton, Jr.
Registration No. 67,275
LAMBERT & ASSOCIATES
92 State Street
Boston, MA 02109
(617) 720-0091

Amendments to the Claims:

What is claimed is:

1. (Currently Amended) A pocket bra comprising:

a strap assembly including a chest strap ~~and shoulder straps~~;

a left cup and a right cup, each cup having inside and outside surfaces, the strap assembly being attached to the cups whereby the strap assembly holds the cups to a wearer, with the chest strap extending from the left cup towards the wearer's back and extending from the right cup towards the wearer's back;

a side patch on one of an inside or outside surface of the chest strap adjacent to at least one of the left cup and right cups, the side patch having upper and lower edges along at least part of a length of the chest strap, and side edges, the side patch having stitching along the lower and side edges thus forming an upper opening such that each side patch forms a pocket, the upper opening capable of repeated receiving and removal of an item.

2. (Original) The bra of claim 1 wherein the cups and the patches form pockets, the cups being fabricated of a resilient closed cell polyurethane foam with a thickness of from 2 to 4 millimeters.

3. (Original) The bra of claim 1 wherein the patch is

fabricated of a resilient closed cell polyurethane foam with a thickness of from 2 to 4 millimeters.

4. (Original) The bra of claim 1 and further including a handheld electronic device, the handheld electronic device placed within the side pocket.

5. (Original) The bra of claim 1 and further including an under-wire coupled beneath each cup in a generally vertical plane.

6. (Currently Amended) The bra of claim 1 wherein the strap assembly further comprises two shoulder straps, and a central area at a back of the strap assembly opposite to the left and right cups, the two shoulder straps and chest strap joining together at the central area, and further comprising a back pocket on the central area ~~a rear at least one of the two shoulder straps~~.

7. (Original) The bra of claim 1 wherein the side pocket further comprises a closure, the closure having a first part on the side of the chest strap, and a second part on the patch, the first part connectable to the second part to close the pocket.

8. (Original) The bra of claim 1 wherein the upper edge of the side patch is aligned with a top edge of the chest strap.

9. (Original) The bra of claim 1 further comprising a pocket flap, the pocket flap extending from the chest strap over the upper opening.

10. (Original) The bra of claim 9 further comprising a closure, the closure configured to connect the pocket flap to the side patch in a closed position.

11. (Original) The bra of claim 10 wherein the closure is a hook and loop connector.

12. (Original) The bra of claim 10 wherein the closure is a button.

13. (Original) The bra of claim 10 wherein the closure is a snap fitting.

14. (Original) The bra of claim 10 wherein the closure is a zipper.

15. (Original) The bra of claim 1 further comprising a piping attached to the upper edge of the side patch.

16. (New) The bra of claim 1 wherein the bra is formed at least partially of a radio frequency shielding fabric.

17. (New) The bra of claim 1 further comprising a central patch attached intermediate to the left and right cups, the central patch forming a central chamber pocket.

18. (New) The bra of claim 1 wherein each cup is an area to receive a breast of a wearer.

19. (New) A chest covering comprising:

a strap assembly including a chest strap;

a left cup and a right cup, each cup being an area to receive a breast of a wearer, and having inside and outside

surfaces, the strap assembly being attached to the cups whereby the strap assembly holds the cups to a wearer, with the chest strap extending from the left cup towards the wearer’s back and extending from the right cup towards the wearer’s back;

a side patch on one of an inside or outside surface of the chest strap adjacent to at least one of the left cup and right cups, the side patch having upper and lower edges along at least part of a length of the chest strap, and side edges, the side patch having stitching along the lower and side edges thus forming an upper opening such that each side patch forms a pocket, the upper opening capable of repeated receiving and removal of an item.

Electronic Acknowledgement Receipt

EFS ID:	25584965
Application Number:	15045592
International Application Number:	
Confirmation Number:	3326
Title of Invention:	POCKET BRA SYSTEM
First Named Inventor/Applicant Name:	Sharon Goff
Customer Number:	32118
Filer:	Gary Ervery Lambert
Filer Authorized By:	
Attorney Docket Number:	16-029-SG
Receipt Date:	25-APR-2016
Filing Date:	17-FEB-2016
Time Stamp:	13:59:47
Application Type:	Utility under 35 USC 111(a)

Payment information:

Submitted with Payment	no

File Listing:

Document Number	Document Description	File Name	File Size(Bytes)/ Message Digest	Multi Part /.zip	Pages (if appl.)
1		Claims-prelim-amend-16-029-SG.pdf	23322 6a7cf8605b80b998039d74460b0fa0a285e45b00	yes	5

	Multipart Description/PDF files in .zip description		
	Document Description	**Start**	**End**
	Preliminary Amendment	1	1
	Claims	2	5
Warnings:			
Information:			
	Total Files Size (in bytes):	23322	

This Acknowledgement Receipt evidences receipt on the noted date by the USPTO of the indicated documents, characterized by the applicant, and including page counts, where applicable. It serves as evidence of receipt similar to a Post Card, as described in MPEP 503.

New Applications Under 35 U.S.C. 111
If a new application is being filed and the application includes the necessary components for a filing date (see 37 CFR 1.53(b)-(d) and MPEP 506), a Filing Receipt (37 CFR 1.54) will be issued in due course and the date shown on this Acknowledgement Receipt will establish the filing date of the application.

National Stage of an International Application under 35 U.S.C. 371
If a timely submission to enter the national stage of an international application is compliant with the conditions of 35 U.S.C. 371 and other applicable requirements a Form PCT/DO/EO/903 indicating acceptance of the application as a national stage submission under 35 U.S.C. 371 will be issued in addition to the Filing Receipt, in due course.

New International Application Filed with the USPTO as a Receiving Office
If a new international application is being filed and the international application includes the necessary components for an international filing date (see PCT Article 11 and MPEP 1810), a Notification of the International Application Number and of the International Filing Date (Form PCT/RO/105) will be issued in due course, subject to prescriptions concerning national security, and the date shown on this Acknowledgement Receipt will establish the international filing date of the application.

UNITED STATES PATENT AND TRADEMARK OFFICE

UNITED STATES DEPARTMENT OF COMMERCE
United States Patent and Trademark Office
Address: COMMISSIONER FOR PATENTS
P.O. Box 1450
Alexandria, Virginia 22313-1450
www.uspto.gov

APPLICATION NO.	FILING DATE	FIRST NAMED INVENTOR	ATTORNEY DOCKET NO.	CONFIRMATION NO.
15/045,592	02/17/2016	Sharon Goff	16-029-SG	3326

32118 7590 09/09/2016
LAMBERT & ASSOCIATES
92 STATE STREET
BOSTON, MA 02109-2004

EXAMINER
HALE, GLORIA M

ART UNIT	PAPER NUMBER
3765	

NOTIFICATION DATE	DELIVERY MODE
09/09/2016	ELECTRONIC

Please find below and/or attached an Office communication concerning this application or proceeding.

The time period for reply, if any, is set in the attached communication.

Notice of the Office communication was sent electronically on above-indicated "Notification Date" to the following e-mail address(es):

lambert@lambertpatentlaw.com
shortell@lambertpatentlaw.com
connaughton@lambertpatentlaw.com

Nike, Inc. v. SherryWear, LLC et al. IPR2024-01128 SherryWear, LLC Exhibit 2066 Page 68

Office Action Summary	Application No. 15/045,592	Applicant(s) GOFF, SHARON	
	Examiner GLORIA HALE	Art Unit 3765	AIA (First Inventor to File) Status Yes

-- The MAILING DATE of this communication appears on the cover sheet with the correspondence address --

Period for Reply

A SHORTENED STATUTORY PERIOD FOR REPLY IS SET TO EXPIRE 3 MONTHS FROM THE MAILING DATE OF THIS COMMUNICATION.

- Extensions of time may be available under the provisions of 37 CFR 1.136(a). In no event, however, may a reply be timely filed after SIX (6) MONTHS from the mailing date of this communication.
- If NO period for reply is specified above, the maximum statutory period will apply and will expire SIX (6) MONTHS from the mailing date of this communication.
- Failure to reply within the set or extended period for reply will, by statute, cause the application to become ABANDONED (35 U.S.C. § 133). Any reply received by the Office later than three months after the mailing date of this communication, even if timely filed, may reduce any earned patent term adjustment. See 37 CFR 1.704(b).

Status

1)☐ Responsive to communication(s) filed on _____.

☐ A declaration(s)/affidavit(s) under **37 CFR 1.130(b)** was/were filed on _____.

2a)☐ This action is **FINAL**. 2b)☒ This action is non-final.

3)☐ An election was made by the applicant in response to a restriction requirement set forth during the interview on _____; the restriction requirement and election have been incorporated into this action.

4)☐ Since this application is in condition for allowance except for formal matters, prosecution as to the merits is closed in accordance with the practice under *Ex parte Quayle*, 1935 C.D. 11, 453 O.G. 213.

Disposition of Claims*

5)☒ Claim(s) 1-19 is/are pending in the application.

5a) Of the above claim(s) _____ is/are withdrawn from consideration.

6)☐ Claim(s) _____ is/are allowed.

7)☒ Claim(s) 1-19 is/are rejected.

8)☐ Claim(s) _____ is/are objected to.

9)☐ Claim(s) _____ are subject to restriction and/or election requirement.

* If any claims have been determined allowable, you may be eligible to benefit from the **Patent Prosecution Highway** program at a participating intellectual property office for the corresponding application. For more information, please see http://www.uspto.gov/patents/init_events/pph/index.jsp or send an inquiry to PPHfeedback@uspto.gov.

Application Papers

10)☐ The specification is objected to by the Examiner.

11)☒ The drawing(s) filed on 2-17-15 is/are: a)☒ accepted or b)☐ objected to by the Examiner.

Applicant may not request that any objection to the drawing(s) be held in abeyance. See 37 CFR 1.85(a).

Replacement drawing sheet(s) including the correction is required if the drawing(s) is objected to. See 37 CFR 1.121(d).

Priority under 35 U.S.C. § 119

12)☐ Acknowledgment is made of a claim for foreign priority under 35 U.S.C. § 119(a)-(d) or (f).

Certified copies:

a)☐ All b)☐ Some** c)☐ None of the:

1.☐ Certified copies of the priority documents have been received.

2.☐ Certified copies of the priority documents have been received in Application No. _____.

3.☐ Copies of the certified copies of the priority documents have been received in this National Stage application from the International Bureau (PCT Rule 17.2(a)).

** See the attached detailed Office action for a list of the certified copies not received.

Attachment(s)

1) ☒ Notice of References Cited (PTO-892)

2) ☒ Information Disclosure Statement(s) (PTO/SB/08a and/or PTO/SB/08b) Paper No(s)/Mail Date 2-17-16.

3) ☐ Interview Summary (PTO-413) Paper No(s)/Mail Date. _____ .

4) ☐ Other: _____.

Nike, Inc. v. SherryWear, LLC et al. IPR2024-01128 SherryWear, LLC Exhibit 2066 Page 69

DETAILED ACTION

Notice of Pre-AIA or AIA Status

The present application, filed on or after March 16, 2013, is being examined under the first inventor to file provisions of the AIA.

Claim Rejections - 35 USC § 112

The following is a quotation of 35 U.S.C. 112(b):
(b) CONCLUSION.—The specification shall conclude with one or more claims particularly pointing out and distinctly claiming the subject matter which the inventor or a joint inventor regards as the invention.

The following is a quotation of 35 U.S.C. 112 (pre-AIA), second paragraph:
The specification shall conclude with one or more claims particularly pointing out and distinctly claiming the subject matter which the applicant regards as his invention.

Claims 1-15 are rejected under 35 U.S.C. 112(b) or 35 U.S.C. 112 (pre-AIA), second paragraph, as being indefinite for failing to particularly point out and distinctly claim the subject matter which the inventor or a joint inventor, or for pre-AIA the applicant regards as the invention.

In claim 1, line 1 applicant claims a “pocket bra” wherein the recitation is not clear since the modifying term of “pocket” before bra can have a meaning that it is a bra for a pocket wherein applicant’s invention is a bra having pockets or a pocketed bra.

In claim 2, lines 1-2 it is not clear as to how the “Cups and patches” form pockets since the cups were not previously claimed in claim 1 as having pockets. The pockets were only claimed on the chest strap. Therefore it is not clear as to how the cups have pockets. In claim 12 applicant claims a "button" closure. However, the complementary

button hole necessary for the button to perform as a closure has not been claimed and is not clear.

However, the claims, as best understood, have been examined on their merits.

Double Patenting

The nonstatutory double patenting rejection is based on a judicially created doctrine grounded in public policy (a policy reflected in the statute) so as to prevent the unjustified or improper timewise extension of the "right to exclude" granted by a patent and to prevent possible harassment by multiple assignees. A nonstatutory double patenting rejection is appropriate where the claims at issue are not identical, but at least one examined application claim is not patentably distinct from the reference claim(s) because the examined application claim is either anticipated by, or would have been obvious over, the reference claim(s). See, e.g., *In re Berg*, 140 F.3d 1428, 46 USPQ2d 1226 (Fed. Cir. 1998); *In re Goodman*, 11 F.3d 1046, 29 USPQ2d 2010 (Fed. Cir. 1993); *In re Longi*, 759 F.2d 887, 225 USPQ 645 (Fed. Cir. 1985); *In re Van Ornum*, 686 F.2d 937, 214 USPQ 761 (CCPA 1982); *In re Vogel*, 422 F.2d 438, 164 USPQ 619 (CCPA 1970); and *In re Thorington*, 418 F.2d 528, 163 USPQ 644 (CCPA 1969).

A timely filed terminal disclaimer in compliance with 37 CFR 1.321(c) or 1.321(d) may be used to overcome an actual or provisional rejection based on a nonstatutory double patenting ground provided the reference application or patent either is shown to be commonly owned with this application, or claims an invention made as a result of

activities undertaken within the scope of a joint research agreement. A terminal disclaimer must be signed in compliance with 37 CFR 1.321(b).

The USPTO internet Web site contains terminal disclaimer forms which may be used. Please visit http://www.uspto.gov/forms/. The filing date of the application will determine what form should be used. A web-based eTerminal Disclaimer may be filled out completely online using web-screens. An eTerminal Disclaimer that meets all requirements is auto-processed and approved immediately upon submission. For more information about eTerminal Disclaimers, refer to http://www.uspto.gov/patents/process/file/efs/guidance/eTD-info-I.jsp.

Claims 1-19 are rejected on the ground of nonstatutory double patenting as being unpatentable over claims 1-9 of U.S. Patent No. 8597072; claims 1-7 of US Patent Application 14/614873(US9289016) and 1-17 of US Patent Application 14/082777 now issued. Although the claims at issue are not identical, they are not patentably distinct from each other because they include the same brassiere structure with the side pockets on the chest strap(s).

Claim Rejections - 35 USC § 102

The following is a quotation of the appropriate paragraphs of 35 U.S.C. 102 that form the basis for the rejections under this section made in this Office action:

> A person shall be entitled to a patent unless –
>
> (a)(1) the claimed invention was patented, described in a printed publication, or in public use, on sale or otherwise available to the public before the effective filing date of the claimed invention.

Claims 1 ,4, 5,8,18 and 19 are rejected under 35 U.S.C. 102a1 as being anticipated by Sherwood (US 4699144)

Sherwood discloses a brassiere with a strap assembly with a chest strap 22and left and right shoulder straps 40 and 52 and left and right cups 18, 20 as in figure 2 Constructed as claimed in claims 1 and 19 . Sherwood also discloses the side patch on one of the inside or outside of the cup 62 that forms a pocket 60 as seen in figure 2-4 that is adjacent to one of the cups as claimed. Sherwood discloses the stitching 64 along the sides and the pocket is also stitched along the bottom edge(not numbered) as claimed and as seen in figure 3. The pocket as seen in figure 3 includes an upper opening that is capable of receiving an item therein all as claimed in claims 1 and 19. Placing a handheld electronic device within the pocket would be a matter of intended use and a wearer can place any item desired with in the pocket to hold any such item desired as in claim 4. The upper edge of the side pocket is aligned with the top edge of the chest strap as claimed in claim 8 as seen in the figures. Line 46 of col. 5 discloses the underwire 58 as clamed as seen in the figures as claimed in claim 5. The cups each receive a breast as claimed in claim 18.

Claim 15 is rejected under 35 U.S.C. 103 as being unpatentable over Sherwood as applied to claim 1 above, and further in view of MacLaren(US 7585200) . Sherwood discloses the brassiere structure as claimed except for the piping as in claim 15. MacLaren discloses the brassiere with piping as claimed. (See MacLaren figure 3 and piping edging at 220 and not numbered along the upper edge of the pocket in MacLaren. (See MacLaren, col. 2, lines 44-66). Accordingly it would have been obvious to one having ordinary skill in the art at the time the invention was made to

modify the pocket edges to include the stretchable tricot piping of MacLaren to provide a smooth comfortable edge on the pocket so that it does not rub on the body of the wearer.

Claims 2,3 rejected under 35 U.S.C. 103 as being unpatentable over Sherwood as applied to claim 1 above, and further in view of Liu (US 2009/0104845).
In regard to claims 2 and 3, Sherwood discloses the invention substantially as claimed except for the brassiere as being made of a polyurethane material of the claimed thicknesses. Liu discloses a bra constructed of a polyurethane neoprene material as claimed to provide padding to the cups that provides a natural look of a natural breast when worn. Accordingly it would have been obvious to one having ordinary skill to construct the brassiere of Sherwood of polyurethane material as desired to provide a natural look to the wearer's breasts when worn. (See Liu, para.)156).. Finding the claims thickness would have been found through routine experimentation since it has been known to find a desired material parameter though routine experimentation to obtain the optimum benefit of that material for the claimed end use. Finding the claimed parameters through routine experimentation would be found easily since that parameter would provide the optimum level of comfort to the wearer in use.

Claims 7 and 11-14 is/are rejected under 35 U.S.C. 103 as being unpatentable over Sherwood in view of Gentry (US 20130288569).

Sherwood discloses the brassiere with the pocket substantially as claimed except for the closure structures as claimed in claims 7 and 11-14. Gentry discloses the pocket situated as claimed as in Gentry figure 5 at 505 and as discussed in para. (0033). Accordingly it would have been an obvious modification to include the pocket closures as claimed in claims 7 and 11-14 to secure the contents of the pocket within the pocket as claimed.

Claim 17 is is/are rejected under 35 U.S.C. 103 as being unpatentable over Sherwood in view of Schlussel (US 2610325).

Sherwood discloses the brassiere substantially as claimed and as discussed above in regard to claim 1 except for the center pocket that lies between the breast cups. Schlussel discloses the pocket 23 between the breast cups to hold any item a wearer desires. (See pocket 23 in figures 1-3 and col. 2, lines 1-29). Accordingly it would have been an obvious modification to include the center pocket to further hold any items as desired securely therein.

Claim 16 is/are rejected under 35 U.S.C. 103 as being unpatentable over Sherwood in view of Dockman(US 20130248064).

Sherwood discloses the brassiere substantially as claimed except the pocket as being of a radio frequency shielding material. Dockman discloses a pocket made of a radio frequency material as in para. (0023) and at 104 in figure 1. Accordingly, it would

have been an obvious modification to use the radio frequency shielding material of Dockman to shield the wearer form such as claimed.

Claim 9 and 10 is/are rejected under 35 U.S.C. 103 as being unpatentable over Sherwood in view of Wollowick (US 20120276812 A1).

Sherwood discloses the brassiere and pocket located as claimed except for the flap to close the pocket.

Wollowick discloses a pocket with a flap 14 as in figure 4 that closes the pocket and secures any item within the pocket so that it does not fall out of the pocket. (See Wollowick, figure 4 and paras. (0034-0035).

Accordingly, it would have been an obvious modification to use a flap to secure the pocket in a more secure fashion to prevent items from falling therefrom.

Claim 6 is/are rejected under 35 U.S.C. 103 as being unpatentable over Sherwood in view of Wilson (US 6099382).

Sherwood discloses the brassiere structure as claimed except for the back panel structure with the central back area that is opposite of the two cups(At front panel 14) and two shoulder straps (20,22 in figure 3) and chest strap (16 in figures 1-4)joining at the central area (54 in figure 4) at back 18 as in figures 1-5 with a back pocket (44 in figures 4 and 5) at the central area (54) as claimed. (See Wilson, figures 1-4 and col. 2, line 61 – col. 3, lines 67). It would have been an obvious modification to include the rear panel and shoulder strap structure as claimed to provide more support to the wearer and a pocket to secure items as desired therein.

Conclusion

The prior art made of record and not relied upon is considered pertinent to applicant's disclosure.

Any inquiry concerning this communication or earlier communications from the examiner should be directed to GLORIA HALE whose telephone number is (571)272-4984. The examiner can normally be reached on Mon.-Thurs..

If attempts to reach the examiner by telephone are unsuccessful, the examiner's supervisor, Khoa Huynh can be reached on 571-272-4888. The fax phone number for the organization where this application or proceeding is assigned is 571-273-8300.

Information regarding the status of an application may be obtained from the Patent Application Information Retrieval (PAIR) system. Status information for published applications may be obtained from either Private PAIR or Public PAIR. Status information for unpublished applications is available through Private PAIR only. For more information about the PAIR system, see http://pair-direct.uspto.gov. Should you have questions on access to the Private PAIR system, contact the Electronic Business Center (EBC) at 866-217-9197 (toll-free). If you would like assistance from a USPTO Customer Service Representative or access to the automated information system, call 800-786-9199 (IN USA OR CANADA) or 571-272-1000.

/GLORIA HALE/
Primary Examiner, Art Unit 3765

***

Notice of References Cited	Application/Control No. 15/045,592	Applicant(s)/Patent Under Reexamination GOFF, SHARON	
	Examiner GLORIA HALE	Art Unit 3765	Page 1 of 2

U.S. PATENT DOCUMENTS

*		Document Number Country Code-Number-Kind Code	Date MM-YYYY	Name	CPC Classification	US Classification
*	A	US-7,585,200 B1	09-2009	McLaren; Laura	A41C3/0035	2/247
*	B	US-8,597,072 B1	12-2013	Lucas; Sharon J.	A41C3/0035	2/247
*	C	US-4,699,144 A	10-1987	Sherwood; Janice K.	A41C3/148	450/54
*	D	US-5,395,280 A	03-1995	Greenberg; Bert	A41C3/148	2/247
*	E	US-2012/0064799 A1	03-2012	Rivers; Kendra	A41C3/0035	450/86
*	F	US-5,334,082 A	08-1994	Barker; Kathryn Z.	A41C3/10	2/247
*	G	US-2005/0037687 A1	02-2005	Newman, Joanna M.	A41C3/0028	450/54
*	H	US-2009/0104845 A1	04-2009	Pintor; Tammy	A41C3/0035	450/31
*	I	US-2010/0124869 A1	05-2010	Liu; Zhen Qiang	A41C5/005	450/39
*	J	US-2013/0255569 A1	10-2013	Yamada; Takumi	H01L21/02104	117/107
*	K	US-2,610,325 A	09-1952	JOSEPH SCHLUSSEL	A41C3/00	2/247
*	L	US-2013/0248064 A1	09-2013	Dockman; Deanna	A45C1/04	150/134
*	M	US-2009/0104845 A1	04-2009	Pintor; Tammy	A41C3/0035	450/31

FOREIGN PATENT DOCUMENTS

*		Document Number Country Code-Number-Kind Code	Date MM-YYYY	Country	Name	CPC Classification
	N					
	O					
	P					
	Q					
	R					
	S					
	T					

NON-PATENT DOCUMENTS

*		Include as applicable: Author, Title Date, Publisher, Edition or Volume, Pertinent Pages)
	U	
	V	
	W	
	X	

*A copy of this reference is not being furnished with this Office action. (See MPEP § 707.05(a).)
Dates in MM-YYYY format are publication dates. Classifications may be US or foreign.

Notice of References Cited	Application/Control No. 15/045,592	Applicant(s)/Patent Under Reexamination GOFF, SHARON	
	Examiner GLORIA HALE	Art Unit 3765	Page 2 of 2

U.S. PATENT DOCUMENTS

*		Document Number Country Code-Number-Kind Code	Date MM-YYYY	Name	CPC Classification	US Classification
*	A	US-2012/0276812 A1	11-2012	Wollowick; Janet Amy	A45F5/02	450/89
*	B	US-6,099,382 A	08-2000	Wilson; Collette	A41C3/0035	2/247
*	C	US-9,289,016 B1	03-2016	Goff; Sharon	A41C3/12	1/1
*	D	US-8,597,072 B1	12-2013	Lucas; Sharon J.	A41C3/0035	2/247
*	E	US-2,436,430 A	02-1948	HART GLADYS M	A41C3/0035	2/250
*	F	US-2,503,847 A	04-1950	SHANAHAN PERLE W	A41C3/0035	224/638
	G	US-				
	H	US-				
	I	US-				
	J	US-				
	K	US-				
	L	US-				
	M	US-				

FOREIGN PATENT DOCUMENTS

*		Document Number Country Code-Number-Kind Code	Date MM-YYYY	Country	Name	Classification
	N					
	O					
	P					
	Q					
	R					
	S					
	T					

NON-PATENT DOCUMENTS

*		Include as applicable: Author, Title Date, Publisher, Edition or Volume, Pertinent Pages)
	U	
	V	
	W	
	X	

*A copy of this reference is not being furnished with this Office action. (See MPEP § 707.05(a).)
Dates in MM-YYYY format are publication dates. Classifications may be US or foreign.

Doc code: IDS
Doc description: Information Disclosure Statement (IDS) Filed

Receipt date: 02/17/2016

PTO/SB/08a (01-10)
Approved for use through 07/31/2012. OMB 0651-0031
U.S. Patent and Trademark Office; U.S. DEPARTMENT OF COMMERCE
Under the Paperwork Reduction Act of 1995, no persons are required to respond to a collection of information unless it contains a valid OMB control number.

INFORMATION DISCLOSURE STATEMENT BY APPLICANT

(Not for submission under 37 CFR 1.99)

Application Number	
Filing Date	
First Named Inventor	Sharon Goff
Art Unit	
Examiner Name	
Attorney Docket Number	16-029-SG

U.S.PATENTS Remove

Examiner Initial*	Cite No	Patent Number	Kind Code[1]	Issue Date	Name of Patentee or Applicant of cited Document	Pages,Columns,Lines where Relevant Passages or Relevant Figures Appear
	1	5496205		1996-03-05	Lee	
	2	7753759		2010-07-13	Pintoer et al.	
	3	8257140		2012-09-04	Kenny	
	4	8771036		2014-07-08	Gentry et al.	

If you wish to add additional U.S. Patent citation information please click the Add button. Add

U.S.PATENT APPLICATION PUBLICATIONS Remove

Examiner Initial*	Cite No	Publication Number	Kind Code[1]	Publication Date	Name of Patentee or Applicant of cited Document	Pages,Columns,Lines where Relevant Passages or Relevant Figures Appear
	1	20080032600		2008-02-07	Updyke	
	2	20090104845		2009-04-23	Pintoer et al.	

ALL REFERENCES CONSIDERED EXCEPT WHERE LINED THROUGH. /G.H./

15045592 - GAU: 3765

INFORMATION DISCLOSURE STATEMENT BY APPLICANT (Not for submission under 37 CFR 1.99)		
	Application Number	Receipt date: 02/17/2016
	Filing Date	
	First Named Inventor	Sharon Goff
	Art Unit	
	Examiner Name	
	Attorney Docket Number	16-029-SG

	3	20090209173		2009-08-20	Arledge et a1.	

If you wish to add additional U.S. Published Application citation information please click the Add button. Add

FOREIGN PATENT DOCUMENTS Remove

Examiner Initial*	Cite No	Foreign Document Number[3]	Country Code[2] i	Kind Code[4]	Publication Date	Name of Patentee or Applicant of cited Document	Pages,Columns,Lines where Relevant Passages or Relevant Figures Appear	T[5]
	1							

If you wish to add additional Foreign Patent Document citation information please click the Add button Add

NON-PATENT LITERATURE DOCUMENTS Remove

Examiner Initials*	Cite No	Include name of the author (in CAPITAL LETTERS), title of the article (when appropriate), title of the item (book, magazine, journal, serial, symposium, catalog, etc), date, pages(s), volume-issue number(s), publisher, city and/or country where published.	T[5]
	1		

If you wish to add additional non-patent literature document citation information please click the Add button Add

EXAMINER SIGNATURE

Examiner Signature	/Gloria Hale/	Date Considered	03/07/2016

*EXAMINER: Initial if reference considered, whether or not citation is in conformance with MPEP 609. Draw line through a citation if not in conformance and not considered. Include copy of this form with next communication to applicant.

[1] See Kind Codes of USPTO Patent Documents at www.USPTO.GOV or MPEP 901.04. [2] Enter office that issued the document, by the two-letter code (WIPO Standard ST.3). [3] For Japanese patent documents, the indication of the year of the reign of the Emperor must precede the serial number of the patent document. [4] Kind of document by the appropriate symbols as indicated on the document under WIPO Standard ST.16 if possible. [5] Applicant is to place a check mark here if English language translation is attached.

ALL REFERENCES CONSIDERED EXCEPT WHERE LINED THROUGH. /G.H./

15045592 - GAU: 3765

INFORMATION DISCLOSURE STATEMENT BY APPLICANT (**Not for submission under 37 CFR 1.99)**	Application Number	Receipt date: 02/17/2016
	Filing Date	
	First Named Inventor	Sharon Goff
	Art Unit	
	Examiner Name	
	Attorney Docket Number	16-029-SG

CERTIFICATION STATEMENT

Please see 37 CFR 1.97 and 1.98 to make the appropriate selection(s):

That each item of information contained in the information disclosure statement was first cited in any communication from a foreign patent office in a counterpart foreign application not more than three months prior to the filing of the information disclosure statement. See 37 CFR 1.97(e)(1).

OR

☐ That no item of information contained in the information disclosure statement was cited in a communication from a foreign patent office in a counterpart foreign application, and, to the knowledge of the person signing the certification after making reasonable inquiry, no item of information contained in the information disclosure statement was known to any individual designated in 37 CFR 1.56(c) more than three months prior to the filing of the information disclosure statement. See 37 CFR 1.97(e)(2).

See attached certification statement.

The fee set forth in 37 CFR 1.17 (p) has been submitted herewith.

X A certification statement is not submitted herewith.

SIGNATURE

A signature of the applicant or representative is required in accordance with CFR 1.33, 10.18. Please see CFR 1.4(d) for the form of the signature.

Signature	/David J. Connaughton, Jr./	Date (YYYY-MM-DD)	2016-02-16
Name/Print	David J. Connaughton, Jr.	Registration Number	67275

This collection of information is required by 37 CFR 1.97 and 1.98. The information is required to obtain or retain a benefit by the public which is to file (and by the USPTO to process) an application. Confidentiality is governed by 35 U.S.C. 122 and 37 CFR 1.14. This collection is estimated to take 1 hour to complete, including gathering, preparing and submitting the completed application form to the USPTO. Time will vary depending upon the individual case. Any comments on the amount of time you require to complete this form and/or suggestions for reducing this burden, should be sent to the Chief Information Officer, U.S. Patent and Trademark Office, U.S. Department of Commerce, P.O. Box 1450, Alexandria, VA 22313-1450. DO NOT SEND FEES OR COMPLETED FORMS TO THIS ADDRESS. **SEND TO: Commissioner for Patents, P.O. Box 1450, Alexandria, VA 22313-1450.**

Nike, Inc. v. SherryWear, LLC et al. IPR2024-01128 SherryWear, LLC Exhibit 2066 Page 83
ALL REFERENCES CONSIDERED EXCEPT WHERE LINED THROUGH. /G.H./

Receipt date: 02/17/2016

Privacy Act Statement

The Privacy Act of 1974 (P.L. 93-579) requires that you be given certain information in connection with your submission of the attached form related to a patent application or patent. Accordingly, pursuant to the requirements of the Act, please be advised that: (1) the general authority for the collection of this information is 35 U.S.C. 2(b)(2); (2) furnishing of the information solicited is voluntary; and (3) the principal purpose for which the information is used by the U.S. Patent and Trademark Office is to process and/or examine your submission related to a patent application or patent. If you do not furnish the requested information, the U.S. Patent and Trademark Office may not be able to process and/or examine your submission, which may result in termination of proceedings or abandonment of the application or expiration of the patent.

The information provided by you in this form will be subject to the following routine uses:

1. The information on this form will be treated confidentially to the extent allowed under the Freedom of Information Act (5 U.S.C. 552) and the Privacy Act (5 U.S.C. 552a). Records from this system of records may be disclosed to the Department of Justice to determine whether the Freedom of Information Act requires disclosure of these record s.

2. A record from this system of records may be disclosed, as a routine use, in the course of presenting evidence to a court, magistrate, or administrative tribunal, including disclosures to opposing counsel in the course of settlement negotiations.

3. A record in this system of records may be disclosed, as a routine use, to a Member of Congress submitting a request involving an individual, to whom the record pertains, when the individual has requested assistance from the Member with respect to the subject matter of the record.

4. A record in this system of records may be disclosed, as a routine use, to a contractor of the Agency having need for the information in order to perform a contract. Recipients of information shall be required to comply with the requirements of the Privacy Act of 1974, as amended, pursuant to 5 U.S.C. 552a(m).

5. A record related to an International Application filed under the Patent Cooperation Treaty in this system of records may be disclosed, as a routine use, to the International Bureau of the World Intellectual Property Organization, pursuant to the Patent Cooperation Treaty.

6. A record in this system of records may be disclosed, as a routine use, to another federal agency for purposes of National Security review (35 U.S.C. 181) and for review pursuant to the Atomic Energy Act (42 U.S.C. 218(c)).

7. A record from this system of records may be disclosed, as a routine use, to the Administrator, General Services, or his/her designee, during an inspection of records conducted by GSA as part of that agency's responsibility to recommend improvements in records management practices and programs, under authority of 44 U.S.C. 2904 and 2906. Such disclosure shall be made in accordance with the GSA regulations governing inspection of records for this purpose, and any other relevant (i.e., GSA or Commerce) directive. Such disclosure shall not be used to make determinations about individuals.

8. A record from this system of records may be disclosed, as a routine use, to the public after either publication of the application pursuant to 35 U.S.C. 122(b) or issuance of a patent pursuant to 35 U.S.C. 151. Further, a record may be disclosed, subject to the limitations of 37 CFR 1.14, as a routine use, to the public if the record was filed in an application which became abandoned or in which the proceedings were terminated and which application is referenced by either a published application, an application open to public inspections or an issued patent.

9. A record from this system of records may be disclosed, as a routine use, to a Federal, State, or local law enforcement agency, if the USPTO becomes aware of a violation or potential violation of law or regulation.

ALL REFERENCES CONSIDERED EXCEPT WHERE LINED THROUGH. /G.H./

Index of Claims	Application/Control No.	Applicant(s)/Patent Under Reexamination
	15045592	GOFF, SHARON
	Examiner	**Art Unit**
	GLORIA HALE	3765

✓	Rejected	-	Cancelled	N	Non-Elected	A	Appeal
=	Allowed	÷	Restricted	I	Interference	O	Objected

☐ Claims renumbered in the same order as presented by applicant ☐ CPA ☐ T.D. ☐ R.1.47

CLAIM		DATE								
Final	Original	03/07/2016								
	1	✓								
	2	✓								
	3	✓								
	4	✓								
	5	✓								
	6	✓								
	7	✓								
	8	✓								
	9	✓								
	10	✓								
	11	✓								
	12	✓								
	13	✓								
	14	✓								
	15	✓								
	16	✓								
	17	✓								
	18	✓								
	19	✓								

Search Notes	Application/Control No.	Applicant(s)/Patent Under Reexamination
	15045592	GOFF, SHARON
	Examiner	**Art Unit**
	GLORIA HALE	3765

CPC- SEARCHED

Symbol	Date	Examiner
A41C 3/00,0021,0028,0035,148,10,005	3-6-16	gh

CPC COMBINATION SETS - SEARCHED

Symbol	Date	Examiner

US CLASSIFICATION SEARCHED

Class	Subclass	Date	Examiner
450	36,39,89,54-57	3-6-16	gh

SEARCH NOTES

Search Notes	Date	Examiner
inv name srch;ids flag clred; review related apps/pats for DP	3-6-16	gh

INTERFERENCE SEARCH

US Class/ CPC Symbol	US Subclass / CPC Group	Date	Examiner

	/GLORIA HALE/ Primary Examiner.Art Unit 3765

Nike, Inc. v. SherryWear, LLC et al. IPR2024-01128 SherryWear, LLC Exhibit 2066 Page 86

To: lambert@lambertpatentlaw.com,shortell@lambertpatentlaw.com,connaughton@lambertpatentlaw.com
From: PAIR_eOfficeAction@uspto.gov
Cc: PAIR_eOfficeAction@uspto.gov
Subject: Private PAIR Correspondence Notification for Customer Number 32118

Sep 09, 2016 05:40:24 AM

Dear PAIR Customer:

LAMBERT & ASSOCIATES
92 STATE STREET
BOSTON, MA 02109-2004
UNITED STATES

The following USPTO patent application(s) associated with your Customer Number, 32118 , have new outgoing correspondence. This correspondence is now available for viewing in Private PAIR.

The official date of notification of the outgoing correspondence will be indicated on the form PTOL-90 accompanying the correspondence.

Disclaimer:
The list of documents shown below is provided as a courtesy and is not part of the official file wrapper. The content of the images shown in PAIR is the official record.

Application	Document	Mailroom Date	Attorney Docket No.
15045592	CTNF	09/09/2016	16-029-SG
	892	09/09/2016	16-029-SG
	1449	09/09/2016	16-029-SG

To view your correspondence online or update your email addresses, please visit us anytime at https://sportal.uspto.gov/secure/myportal/privatepair.

If you have any questions, please email the Electronic Business Center (EBC) at EBC@uspto.gov with 'e-Office Action' on the subject line or call 1-866-217-9197 during the following hours:

Monday - Friday 6:00 a.m. to 12:00 a.m.

Thank you for prompt attention to this notice,

UNITED STATES PATENT AND TRADEMARK OFFICE

PATENT APPLICATION INFORMATION RETRIEVAL SYSTEM

Docket No. 16-029-SG

UNITED STATES PATENT AND TRADEMARK OFFICE

Serial No.: 15/045,592
Applicant: Sharon Goff
Filed: February 17, 2016
Examiner: Hale, Gloria M.
Art Unit: 3765

Lambert & Associates
92 State Street
Boston, MA 02109

Commissioner for Patents
P.O. Box 1450
Alexandria, VA 22313-1450

AMENDMENT AND RESPONSE TO SEPTEMBER 9, 2016 OFFICE ACTION

This is a response to the Office Action issued on September 9, 2016 by the U.S. Patent and Trademark Office in connection with the above-identified application. A response to the September 9, 2016 Office Action is due December 9, 2016. Accordingly, this response is being timely filed.

Amendments to the Claims:

This listing of claims will replace all prior versions, and listings, of claims in the application:

1. (Currently Amended) A pocketed bra comprising:

a strap assembly including a chest strap;

a left cup and a right cup, each cup being an area to receive a breast of a wearer having inside and outside surfaces, the strap assembly being attached to the cups whereby the strap assembly holds the cups to a wearer, with the chest strap extending from the left cup towards the wearer's back and extending from the right cup towards the wearer's back;

a side patch on one of an inside or outside surface of the chest strap adjacent to at least one of the left cup and right cups, the side patch having upper and lower edges along at least part of a length of the chest strap, and side edges, the side patch having stitching along the lower and side edges thus forming an upper opening such that ~~each~~ the side patch forms a pocket, the upper opening capable of repeated receiving and removal of an item when being worn by the wearer.

2. (Canceled)

3. (Canceled).

4. (Original) The bra of claim 1 and further including a handheld electronic device, the handheld electronic device placed within the side pocket.

5. (Canceled).

6. (Previously Presented) The bra of claim 1 wherein the strap assembly further comprises two shoulder straps, and a central area at a back of the strap assembly opposite to the left and right cups, the two shoulder straps and chest strap joining together at the central area, and further comprising a back pocket on the central area.

7. (Original) The bra of claim 1 wherein the side pocket further comprises a closure, the closure having a first part on the side of the chest strap, and a second part on the patch, the first part connectable to the second part to close the pocket.

8. (Original) The bra of claim 1 wherein the upper edge of the side patch is aligned with a top edge of the chest strap.

9. (Original) The bra of claim 1 further comprising a pocket flap, the pocket flap extending from the chest strap over the upper opening.

10. (Original) The bra of claim 9 further comprising a closure, the closure configured to connect the pocket flap to the side patch in a closed position.

11. (Currently Amended) The bra of claim [[10]] 7 wherein the closure is a hook and loop connector.

12. (Currently Amended) The bra of claim [[10]] 7 wherein the closure is a button and button hole.

13. (Currently Amended) The bra of claim [[10]] 7 wherein the closure is a snap fitting.

14. (Currently Amended) The bra of claim [[10]] 7 wherein the closure is a zipper.

15. (Original) The bra of claim 1 further comprising a piping attached to the upper edge of the side patch.

16. (Previously Presented) The bra of claim 1 wherein the bra is formed at least partially of a radio frequency shielding fabric.

17. (Previously Presented) The bra of claim 1 further comprising a central patch attached intermediate to the left and right cups, the central patch forming a central chamber pocket.

18. (Previously Presented) The bra of claim 1 wherein each cup is an area to receive a breast of a wearer.

19. (Currently Amended) A chest covering comprising:

a strap assembly including a chest strap;

a left cup and a right cup, each cup being an area to receive a breast of a wearer, and having inside and outside surfaces, the strap assembly being attached to the cups whereby the strap assembly holds the cups to a wearer, with the chest strap extending from the left cup towards the wearer's back and extending from the right cup towards the wearer's back;

a side patch on one of an inside or outside surface of the chest strap adjacent to at least one of the left cup and right cups, the side patch having upper and lower edges along at least part of a length of the chest strap, and side edges, the side patch having stitching along the lower and side edges thus forming an upper opening such that [[each]] <u>the</u> side patch forms a pocket, the upper opening capable of repeated receiving and removal of an item <u>when being worn by the wearer</u>.

Remarks

Applicant thanks the Office for the attention accorded to the present application in the September 9, 2016 Office Action. Claims 1-19 were pending in the subject application.

Without prejudice or disclaimer, claims 1, 11-14 and 19 have been amended and claims 2-3 and 5 have been cancelled. Upon entry of this amendment, claims 1, 4 and 6-19 will be pending in the present application.

The amendments to the claims are primarily to correct matters of form and/or clarity in response to the Office's recommendation. Applicant asserts that all claims are supported in the specification as originally filed. No new matter has been added.

The claim amendments and cancellations made herein are made solely to expedite prosecution of the instant application, and should not be construed as acquiescence to the Office's rejections. Applicant reserves the right to pursue the cancelled and/or non-elected subject matter in one or more divisional or continuation applications.

Applicant respectfully traverses all rejections and asserts that the claims are now in condition for allowance.

Rejection based 35 U.S.C. §112, Second Paragraph

In the present Office Action, the Examiner rejected claims 1-15 under 35 U.S.C. §112, second paragraph, as being indefinite for failing to particularly point out and distinctly claim the subject matter which Applicant regards as the invention. In response,

Applicant has herein amended claims 1 and 12, and has cancelled claim 2. As such, Applicant respectfully asserts that the 35 U.S.C. 112 rejections are now moot, and Applicant respectfully requests that the Examiner remove the rejection.

Double Patenting

Claims 1-19 are rejected on the ground of nonstatutory obviousness-type double patenting as being unpatentable over claims 1-9 of U.S. Patent No. 8597072; claims 1-7 of US Patent Application 14/614873(US9289016) and 1-17 of US Patent Application 14/082777.

Without acceding to the propriety of the rejection, Applicant asserts that the amendments to claim 1 and claims depending therefrom distinguishes from the cited patents and patent application. As such, Applicant asserts that the double patenting rejection is now moot, and respectfully requests that Examiner remove this ground of rejection.

35 U.S.C. 102 Rejections

In the present Office Action, the Examiner rejected claims 1, 4, 5, 8, 18 and 19 under 35 U.S.C. 102(b) as being anticipated by Sherwood (US 4699144).

Without prejudice or disclaimer, Applicant has amended claims 1 and 19 to further clarify from Sherwood. Specifically, Sherwood does not teach a pocket having an upper opening capable of repeated receiving and removal of an item when the bra is being worn by the wearer. Instead, Sherwood teaches a mastectomy bra, which can be custom made with padding in a side band of the bra to compensate for any removed tissue on a side of a

torso, providing a continuous contour about the wearer's torso. This is discussed in Sherwood at Col. 5 line 53- Col. 6 line 19. Specifically, Sherwood states that its pocket must be closed permanently once the bra is custom fitted. This permanent closure is explained at Col. 6 lines 5-6: "Thereafter, the entrance 60 may be stitched or otherwise secured closed to enclose the material therein" (emphasis added). Therefore, Sherwood does not teach a pocket capable of repeatedly being used to hold items, but instead merely teaches a region in which padding can be placed and then permanently secured. Importantly, this is made more clear by the requirement of claims 1 and 19 that the pocket be capable of repeated receiving and removal of items when the bra is being worn by the user. As such, Applicant respectfully asserts that Sherwood does not teach the side pocket of claims 1 and 19.

As such, Applicant respectfully asserts that the 35 U.S.C. 102(b) rejection based on Sherwood is overcome, and respectfully requests that the Examiner remove this rejection.

Rejections under 35 U.S.C. § 103(a)

The Examiner has rejected claim 15 under 35 U.S.C. 103(a) as being unpatentable over Sherwood (US 4699144) in view of Maclaren (US 7585200).

Without prejudice or disclaimer, Applicant has amended claim 1, from which claim 15 depends. Maclaren does not teach the elements of claim 1 that are missing from Sherwood. Therefore, the combination of references does not establish a prima facie case of obviousness under 35 U.S.C. 103(a).

Thus, Applicant respectfully asserts that claim 15 is now patentably distinguished from Sherwood in view of Maclaren. Applicant further asserts that these claims are now in condition for allowance.

In the present Office Action, the Examiner rejected claims 2 and 3 under 35 U.S.C. 103(a) as being unpatentable over Sherwood (US 4699144) in view of Liu (US 2009/0104845).

Without prejudice or disclaimer, Applicant has cancelled claims 2-3 and to clarify the inventions contemplated therein. Applicant respectfully asserts that the rejection of claims 2 and 3 is moot.

The Examiner has rejected claims 7 and 11-14 under 35 U.S.C. 103(a) as being unpatentable over Sherwood (US 4699144) in view of Gentry (US 20130288569).

Without prejudice or disclaimer, Applicant has amended claim 1, from which claims 7 and 11-14 depend. Gentry does not teach the elements of claim 1 that are missing from Sherwood. Therefore, the combination of references does not establish a prima facie case of obviousness under 35 U.S.C. 103(a).

Thus, Applicant respectfully asserts that claims 7 and 11-14 are now patentably distinguished from Sherwood in view of Gentry. Applicant further asserts that these claims are now in condition for allowance.

Conclusion

Applicant again thanks the Office for the attention accorded to the present Application in the September 9, 2016 office action. Applicant has herein amended claims 1, 11-14 and 19 and cancelled claims 2-3 and 5. Applicant asserts that based on the amendments and comments presented herein, all of the pending claims are in condition for allowance. Early and favorable action is respectfully requested.

The Examiner is invited to telephone the undersigned, Applicant's attorney of record, to facilitate advancement of the present application.

Respectfully submitted,

/David J. Connaughton, Jr./
David J. Connaughton, Jr.
USPTO Reg. #67275
LAMBERT & ASSOCIATES
92 State Street
Boston, MA 02109
(617) 720-0091

Electronic Acknowledgement Receipt

EFS ID:	27577811
Application Number:	15045592
International Application Number:	
Confirmation Number:	3326
Title of Invention:	POCKET BRA SYSTEM
First Named Inventor/Applicant Name:	Sharon Goff
Customer Number:	32118
Filer:	Gary Ervery Lambert
Filer Authorized By:	
Attorney Docket Number:	16-029-SG
Receipt Date:	21-NOV-2016
Filing Date:	17-FEB-2016
Time Stamp:	17:36:56
Application Type:	Utility under 35 USC 111(a)

Payment information:

Submitted with Payment	no

File Listing:

Document Number	Document Description	File Name	File Size(Bytes)/ Message Digest	Multi Part /.zip	Pages (if appl.)
1		Response-Non-Final-Office-Action-16-029-Side-Pocket-Con.pdf	42580 5462c4353e7c8aa23ad0dcebd5d1e0bc392aaf82	yes	9

	Multipart Description/PDF files in .zip description		
	Document Description	**Start**	**End**
	Amendment/Req. Reconsideration-After Non-Final Reject	1	1
	Claims	2	4
	Applicant Arguments/Remarks Made in an Amendment	5	9

Warnings:	
Information:	
Total Files Size (in bytes):	42580

This Acknowledgement Receipt evidences receipt on the noted date by the USPTO of the indicated documents, characterized by the applicant, and including page counts, where applicable. It serves as evidence of receipt similar to a Post Card, as described in MPEP 503.

<u>New Applications Under 35 U.S.C. 111</u>
If a new application is being filed and the application includes the necessary components for a filing date (see 37 CFR 1.53(b)-(d) and MPEP 506), a Filing Receipt (37 CFR 1.54) will be issued in due course and the date shown on this Acknowledgement Receipt will establish the filing date of the application.

<u>National Stage of an International Application under 35 U.S.C. 371</u>
If a timely submission to enter the national stage of an international application is compliant with the conditions of 35 U.S.C. 371 and other applicable requirements a Form PCT/DO/EO/903 indicating acceptance of the application as a national stage submission under 35 U.S.C. 371 will be issued in addition to the Filing Receipt, in due course.

<u>New International Application Filed with the USPTO as a Receiving Office</u>
If a new international application is being filed and the international application includes the necessary components for an international filing date (see PCT Article 11 and MPEP 1810), a Notification of the International Application Number and of the International Filing Date (Form PCT/RO/105) will be issued in due course, subject to prescriptions concerning national security, and the date shown on this Acknowledgement Receipt will establish the international filing date of the application.

PTO/SB/06 (09-11)
Approved for use through 1/31/2014. OMB 0651-0032
U.S. Patent and Trademark Office; U.S. DEPARTMENT OF COMMERCE
Under the Paperwork Reduction Act of 1995, no persons are required to respond to a collection of information unless it displays a valid OMB control number.

PATENT APPLICATION FEE DETERMINATION RECORD

Substitute for Form PTO-875

Application or Docket Number	Filing Date	
15/045,592	02/17/2016	☐ To be Mailed

ENTITY: ☐ LARGE ☒ SMALL ☐ MICRO

APPLICATION AS FILED – PART I

FOR	(Column 1) NUMBER FILED	(Column 2) NUMBER EXTRA	RATE ($)	FEE ($)
☐ BASIC FEE (37 CFR 1.16(a), (b), or (c))	N/A	N/A	N/A	
☐ SEARCH FEE (37 CFR 1.16(k), (i), or (m))	N/A	N/A	N/A	
☐ EXAMINATION FEE (37 CFR 1.16(o), (p), or (q))	N/A	N/A	N/A	
TOTAL CLAIMS (37 CFR 1.16(i))	minus 20 =	*	x $ =	
INDEPENDENT CLAIMS (37 CFR 1.16(h))	minus 3 =	*	x $ =	
☐ APPLICATION SIZE FEE (37 CFR 1.16(s))	If the specification and drawings exceed 100 sheets of paper, the application size fee due is $310 ($155 for small entity) for each additional 50 sheets or fraction thereof. See 35 U.S.C. 41(a)(1)(G) and 37 CFR 1.16(s).			
☐ MULTIPLE DEPENDENT CLAIM PRESENT (37 CFR 1.16(j))				
* If the difference in column 1 is less than zero, enter "0" in column 2.			TOTAL	

APPLICATION AS AMENDED – PART II

AMENDMENT

11/21/2016	(Column 1) CLAIMS REMAINING AFTER AMENDMENT		(Column 2) HIGHEST NUMBER PREVIOUSLY PAID FOR	(Column 3) PRESENT EXTRA	RATE ($)	ADDITIONAL FEE ($)
Total (37 CFR 1.16(i))	* 16	Minus	** 20	= 0	x $40 =	0
Independent (37 CFR 1.16(h))	* 2	Minus	***3	= 0	x $210 =	0
☐ Application Size Fee (37 CFR 1.16(s))						
☐ FIRST PRESENTATION OF MULTIPLE DEPENDENT CLAIM (37 CFR 1.16(j))						
					TOTAL ADD'L FEE	0

AMENDMENT

	(Column 1) CLAIMS REMAINING AFTER AMENDMENT		(Column 2) HIGHEST NUMBER PREVIOUSLY PAID FOR	(Column 3) PRESENT EXTRA	RATE ($)	ADDITIONAL FEE ($)
Total (37 CFR 1.16(i))	*	Minus	**	=	x $ =	
Independent (37 CFR 1.16(h))	*	Minus	***	=	x $ =	
☐ Application Size Fee (37 CFR 1.16(s))						
☐ FIRST PRESENTATION OF MULTIPLE DEPENDENT CLAIM (37 CFR 1.16(j))						
					TOTAL ADD'L FEE	

* If the entry in column 1 is less than the entry in column 2, write "0" in column 3.
** If the "Highest Number Previously Paid For" IN THIS SPACE is less than 20, enter "20".
*** If the "Highest Number Previously Paid For" IN THIS SPACE is less than 3, enter "3".
The "Highest Number Previously Paid For" (Total or Independent) is the highest number found in the appropriate box in column 1.

LIE
PAUL STANBACK

This collection of information is required by 37 CFR 1.16. The information is required to obtain or retain a benefit by the public which is to file (and by the USPTO to process) an application. Confidentiality is governed by 35 U.S.C. 122 and 37 CFR 1.14. This collection is estimated to take 12 minutes to complete, including gathering, preparing, and submitting the completed application form to the USPTO. Time will vary depending upon the individual case. Any comments on the amount of time you require to complete this form and/or suggestions for reducing this burden, should be sent to the Chief Information Officer, U.S. Patent and Trademark Office, U.S. Department of Commerce, P.O. Box 1450, Alexandria, VA 22313-1450. DO NOT SEND FEES OR COMPLETED FORMS TO THIS ADDRESS. **SEND TO: Commissioner for Patents, P.O. Box 1450, Alexandria, VA 22313-1450.**
If you need assistance in completing the form, call 1-800-PTO-9199 and select option 2.

UNITED STATES PATENT AND TRADEMARK OFFICE

UNITED STATES DEPARTMENT OF COMMERCE
United States Patent and Trademark Office
Address: COMMISSIONER FOR PATENTS
P.O. Box 1450
Alexandria, Virginia 22313-1450
www.uspto.gov

APPLICATION NO.	FILING DATE	FIRST NAMED INVENTOR	ATTORNEY DOCKET NO.	CONFIRMATION NO.
15/045,592	02/17/2016	Sharon Goff	16-029-SG	3326

32118 7590 02/21/2017
LAMBERT & ASSOCIATES
92 STATE STREET
BOSTON, MA 02109-2004

EXAMINER
HALE, GLORIA M

ART UNIT	PAPER NUMBER
3765	

NOTIFICATION DATE	DELIVERY MODE
02/21/2017	ELECTRONIC

Please find below and/or attached an Office communication concerning this application or proceeding.

The time period for reply, if any, is set in the attached communication.

Notice of the Office communication was sent electronically on above-indicated "Notification Date" to the following e-mail address(es):

lambert@lambertpatentlaw.com
shortell@lambertpatentlaw.com
connaughton@lambertpatentlaw.com

Nike, Inc. v. SherryWear, LLC et al. IPR2024-01128 SherryWear, LLC Exhibit 2066 Page 100

Office Action Summary	Application No. 15/045,592	Applicant(s) GOFF, SHARON	
	Examiner GLORIA HALE	Art Unit 3765	AIA (First Inventor to File) Status Yes

-- The MAILING DATE of this communication appears on the cover sheet with the correspondence address --

Period for Reply

A SHORTENED STATUTORY PERIOD FOR REPLY IS SET TO EXPIRE 3 MONTHS FROM THE MAILING DATE OF THIS COMMUNICATION.

- Extensions of time may be available under the provisions of 37 CFR 1.136(a). In no event, however, may a reply be timely filed after SIX (6) MONTHS from the mailing date of this communication.
- If NO period for reply is specified above, the maximum statutory period will apply and will expire SIX (6) MONTHS from the mailing date of this communication.
- Failure to reply within the set or extended period for reply will, by statute, cause the application to become ABANDONED (35 U.S.C. § 133). Any reply received by the Office later than three months after the mailing date of this communication, even if timely filed, may reduce any earned patent term adjustment. See 37 CFR 1.704(b).

Status

1)☒ Responsive to communication(s) filed on *11-21-16*.

☐ A declaration(s)/affidavit(s) under **37 CFR 1.130(b)** was/were filed on _____.

2a)☒ This action is **FINAL**. 2b)☐ This action is non-final.

3)☐ An election was made by the applicant in response to a restriction requirement set forth during the interview on _____; the restriction requirement and election have been incorporated into this action.

4)☐ Since this application is in condition for allowance except for formal matters, prosecution as to the merits is closed in accordance with the practice under *Ex parte Quayle*, 1935 C.D. 11, 453 O.G. 213.

Disposition of Claims*

5)☒ Claim(s) *1,4 and 6-19* is/are pending in the application.

5a) Of the above claim(s) _____ is/are withdrawn from consideration.

6)☐ Claim(s) _____ is/are allowed.

7)☒ Claim(s) *1,4 and 6-19* is/are rejected.

8)☐ Claim(s) _____ is/are objected to.

9)☐ Claim(s) _____ are subject to restriction and/or election requirement.

* If any claims have been determined allowable, you may be eligible to benefit from the **Patent Prosecution Highway** program at a participating intellectual property office for the corresponding application. For more information, please see http://www.uspto.gov/patents/init_events/pph/index.jsp or send an inquiry to PPHfeedback@uspto.gov.

Application Papers

10)☐ The specification is objected to by the Examiner.

11)☐ The drawing(s) filed on _____ is/are: a)☐ accepted or b)☐ objected to by the Examiner.

Applicant may not request that any objection to the drawing(s) be held in abeyance. See 37 CFR 1.85(a).

Replacement drawing sheet(s) including the correction is required if the drawing(s) is objected to. See 37 CFR 1.121(d).

Priority under 35 U.S.C. § 119

12)☐ Acknowledgment is made of a claim for foreign priority under 35 U.S.C. § 119(a)-(d) or (f).

Certified copies:

a)☐ All b)☐ Some** c)☐ None of the:

1.☐ Certified copies of the priority documents have been received.

2.☐ Certified copies of the priority documents have been received in Application No. _____.

3.☐ Copies of the certified copies of the priority documents have been received in this National Stage application from the International Bureau (PCT Rule 17.2(a)).

** See the attached detailed Office action for a list of the certified copies not received.

Attachment(s)

1) ☒ Notice of References Cited (PTO-892)

2) ☐ Information Disclosure Statement(s) (PTO/SB/08a and/or PTO/SB/08b) Paper No(s)/Mail Date _____.

3) ☐ Interview Summary (PTO-413) Paper No(s)/Mail Date. _____ .

4) ☐ Other: _____.

Nike, Inc. v. SherryWear, LLC et al. IPR2024-01128 SherryWear, LLC Exhibit 2006 Page 101

DETAILED ACTION

Claim Rejections - 35 USC § 112

The following is a quotation of 35 U.S.C. 112(b):
(b) CONCLUSION.—The specification shall conclude with one or more claims particularly pointing out and distinctly claiming the subject matter which the inventor or a joint inventor regards as the invention.

The following is a quotation of 35 U.S.C. 112 (pre-AIA), second paragraph:
The specification shall conclude with one or more claims particularly pointing out and distinctly claiming the subject matter which the applicant regards as his invention.

Claims 1,4 and 6-19 are rejected under 35 U.S.C. 112(b) or 35 U.S.C. 112 (pre-AIA), second paragraph, as being indefinite for failing to particularly point out and distinctly claim the subject matter which the inventor or a joint inventor, or for pre-AIA the applicant regards as the invention.

In claim 1, lines 12-13, it is not clear as to what structure allows for the function as claimed of "the upper opening capable of repeated receiving and removal of an item when being worn by the wearer." Applicant has not added any additional structural limitations to the claim that allows for the function as claimed and discussed above.

Also in claim 4, the placement of a handheld electronic device does not appear to be part of the "pocketed bra" invention since applicant has not claimed the bra and device in combination in the preamble of claim 1. Therefore it is not clear if applicant is claiming the bra and device in combination or if it is just the intended use of the pocket. The device is not structurally a part of the pocket therefore it is considered to be only an intended use of the pocket to hold such a device.

Claim 18 is now unclear and indefinite in that the subject matter of claim 18 has now been added to line 3 of claim 1. Therefore, claim 18 is now redundant and does not further limit the claim 1 that it depends from and should be canceled.

Claim 19, last two lines, renders the claim indefinite and unclear for the same reasons as discussed in regard to claim 1 in regard to the "repeated receiving and removal of an item when being worn on the wearer". Applicant has not added any further limitations in regard to any additional structural elements or limitations that allow for the function as clamed therein as discussed above in regard to claim 1.

However, the claims, as best understood, have been examined on their merits.

Double Patenting

The nonstatutory double patenting rejection is based on a judicially created doctrine grounded in public policy (a policy reflected in the statute) so as to prevent the unjustified or improper timewise extension of the "right to exclude" granted by a patent and to prevent possible harassment by multiple assignees. A nonstatutory double patenting rejection is appropriate where the conflicting claims are not identical, but at least one examined application claim is not patentably distinct from the reference claim(s) because the examined application claim is either anticipated by, or would have been obvious over, the reference claim(s). See, e.g., *In re Berg*, 140 F.3d 1428, 46 USPQ2d 1226 (Fed. Cir. 1998); *In re Goodman*, 11 F.3d 1046, 29 USPQ2d 2010 (Fed. Cir. 1993); *In re Longi*, 759 F.2d 887, 225 USPQ 645 (Fed. Cir. 1985); *In re Van Ornum*, 686 F.2d 937, 214 USPQ 761 (CCPA 1982); *In re Vogel*, 422 F.2d 438, 164 USPQ 619 (CCPA 1970); *In re Thorington*, 418 F.2d 528, 163 USPQ 644 (CCPA 1969).

A timely filed terminal disclaimer in compliance with 37 CFR 1.321(c) or 1.321(d) may be used to overcome an actual or provisional rejection based on nonstatutory double patenting provided the reference application or patent either is shown to be commonly owned with the examined application, or claims an invention made as a result of activities undertaken within the scope of a joint research agreement. See MPEP § 717.02 for applications subject to examination under the first inventor to file provisions of the AIA as explained in MPEP § 2159. See MPEP §§ 706.02(l)(1) - 706.02(l)(3) for applications not subject to examination under the first inventor to file provisions of the AIA. A terminal disclaimer must be signed in compliance with 37 CFR 1.321(b).

The USPTO Internet website contains terminal disclaimer forms which may be used. Please visit www.uspto.gov/patent/patents-forms. The filing date of the application in which the form is filed determines what form (e.g., PTO/SB/25, PTO/SB/26, PTO/AIA/25, or PTO/AIA/26) should be used. A web-based eTerminal Disclaimer may be filled out completely online using web-screens. An eTerminal Disclaimer that meets all requirements is auto-processed and approved immediately upon submission. For more information about eTerminal Disclaimers, refer to www.uspto.gov/patents/process/file/efs/guidance/eTD-info-I.jsp.

Claims 1, 4 and 6-19 are rejected on the ground of nonstatutory double patenting as being unpatentable over claims 1-7 of U.S. Patent No. 9289016 and claims 1-17 and especially claims 5 and 7 of U. S. Patent No. 9295288. Although the claims

at issue are not identical, they are not patentably distinct from each other because the claims claim the same brassiere structure with the side strap and pocket therein.

Claim Rejections - 35 USC § 102

The following is a quotation of the appropriate paragraphs of 35 U.S.C. 102 that form the basis for the rejections under this section made in this Office action:

> A person shall be entitled to a patent unless –
>
> (a)(1) the claimed invention was patented, described in a printed publication, or in public use, on sale or otherwise available to the public before the effective filing date of the claimed invention.

Claims 1 ,4, 8,18 and 19 are rejected under 35 U.S.C. 102a1 as being anticipated by Boatright et al (US 2011/0244758).

Boatright et al discloses a brassiere 104 in figure 5A with a strap assembly 112A,112B with a chest strap 112A, 112B and left and right shoulder straps 116 A and 116 B and left and right cups 108A, 108 B in figure 5A constructed as claimed in claims 1 and 19 . Boatright et al also discloses the side patch on one of the inside or outside of the cup 108 A, 108B that forms a pocket 120A, B as seen in figure 2-4 that is adjacent to one of the cups as claimed. Boatright et al discloses the stitching not numbered at 120 A in figure 5C along the sides and the pocket is also stitched along the bottom edge(not numbered) as claimed and as seen in figure 5C as stated in paragraph 0044,0045 and 0049. The pocket as seen in figure 5c includes a side opening but paragraph (0047) discusses an upper opening 128s that is capable of receiving an item therein all as claimed in claims 1 and 19. Placing a handheld electronic device within the pocket would be a matter of intended use and a wearer can place any item desired with in the pocket to hold any such item desired as in claim 4. The upper edge of the

side pocket is aligned with the top edge of the chest strap as claimed in claim 8 as seen in the figures in that the term "aligned" as broadly interpreted means that it follows the same linear line, parallel thereto and does not mean that it is lying directly over the same edge line. The cups each receive a breast as claimed in claim 18.

Claim 15 is rejected under 35 U.S.C. 103 as being unpatentable over Boatright et al as applied to claim 1 above, and further in view of MacLaren(US 7585200) . Boatright et al discloses the brassiere structure as claimed except for the piping as in claim 15. MacLaren discloses the brassiere with piping as claimed. (See MacLaren figure 3 and piping edging at 220 and not numbered along the upper edge of the pocket in MacLaren. (See MacLaren, col. 2, lines 44-66). Accordingly it would have been obvious to one having ordinary skill in the art at the time the invention was made to modify the pocket edges to include the stretchable tricot piping of MacLaren to provide a smooth comfortable edge on the pocket so that it does not rub on the body of the wearer.

Claims 7 and 11-14 is/are rejected under 35 U.S.C. 103 as being unpatentable over Boatright et al in view of Gentry (US 20130288569).
Boatright et al discloses the brassiere with the pocket substantially as claimed except for the closure structures as claimed in claims 7 and 11-14. Gentry discloses the pocket

situated as claimed as in Gentry figure 5 at 505 and as discussed in para. (0033). Accordingly it would have been an obvious modification to include the pocket closures as claimed in claims 7 and 11-14 to secure the contents of the pocket within the pocket as claimed.

Claim 17 is is/are rejected under 35 U.S.C. 103 as being unpatentable over Boatright et al in view of Schlussel (US 2610325).

Boatright et al discloses the brassiere substantially as claimed and as discussed above in regard to claim 1 except for the center pocket that lies between the breast cups. Schlussel discloses the pocket 23 between the breast cups to hold any item a wearer desires. (See pocket 23 in figures 1-3 and col. 2, lines 1-29). Accordingly it would have been an obvious modification to include the center pocket to further hold any items as desired securely therein.

Claim 16 is/are rejected under 35 U.S.C. 103 as being unpatentable over Boatright et al in view of Dockman(US 20130248064).

Boatright et al discloses the brassiere substantially as claimed except the pocket as being of a radio frequency shielding material. Dockman discloses a pocket made of a radio frequency material as in para. (0023) and at 104 in figure 1. Accordingly, it would have been an obvious modification to use the radio frequency shielding material of Dockman to shield the wearer form such as claimed.

Claim 9 and 10 is/are rejected under 35 U.S.C. 103 as being unpatentable over Boatright et al in view of Wollowick (US 20120276812 A1).

Boatright et al discloses the brassiere and pocket located as claimed except for the flap to close the pocket.

Wollowick discloses a pocket with a flap 14 as in figure 4 that closes the pocket and secures any item within the pocket so that it does not fall out of the pocket. (See Wollowick, figure 4 and paras. (0034-0035).

Accordingly, it would have been an obvious modification to use a flap to secure the pocket in a more secure fashion to prevent items from falling therefrom.

Boatright et al Claim 6 is/are rejected under 35 U.S.C. 103 as being unpatentable over Sherwood in view of Wilson (US 6099382).

Boatright et al discloses the brassiere structure as claimed except for the back panel structure with the central back area that is opposite of the two cups(At front panel 14) and two shoulder straps (20,22 in figure 3) and chest strap (16 in figures 1-4)joining at the central area (54 in figure 4) at back 18 as in figures 1-5 with a back pocket (44 in figures 4 and 5) at the central area (54) as claimed. (See Wilson, figures 1-4 and col. 2, line 61 – col. 3, lines 67). It would have been an obvious modification to include the rear panel and shoulder strap structure as claimed to provide more support to the wearer and a pocket to secure items as desired therein.

Response to Arguments

Applicant's arguments with respect to claims 1 , 4, 8 , 18 and 19 have been considered but are moot because the arguments do not apply to any of the references

being used in the current rejection. The newly found prior art reference of Boatwright discloses the side panel pocket that has a top opening as discussed above in the rejections of claims 1, 4, 8 , 18 and 19.

The new amendment to the claims does not define the structure that performs the newly claimed function.

The Double Patenting Rejection to the listed related patents stand since they claim the same pocket structures as in applicant's present application.

Conclusion

The prior art made of record and not relied upon is considered pertinent to applicant's disclosure.

THIS ACTION IS MADE FINAL. Applicant is reminded of the extension of time policy as set forth in 37 CFR 1.136(a).

A shortened statutory period for reply to this final action is set to expire THREE MONTHS from the mailing date of this action. In the event a first reply is filed within TWO MONTHS of the mailing date of this final action and the advisory action is not mailed until after the end of the THREE-MONTH shortened statutory period, then the shortened statutory period will expire on the date the advisory action is mailed, and any extension fee pursuant to 37 CFR 1.136(a) will be calculated from the mailing date of the advisory action. In no event, however, will the statutory period for reply expire later than SIX MONTHS from the mailing date of this final action.

Any inquiry concerning this communication or earlier communications from the examiner should be directed to GLORIA HALE whose telephone number is (571)272-4984. The examiner can normally be reached on Mon.-Thurs..

If attempts to reach the examiner by telephone are unsuccessful, the examiner's supervisor, Khoa Huynh can be reached on 571-272-4888. The fax phone number for the organization where this application or proceeding is assigned is 571-273-8300.

Information regarding the status of an application may be obtained from the Patent Application Information Retrieval (PAIR) system. Status information for published applications may be obtained from either Private PAIR or Public PAIR. Status information for unpublished applications is available through Private PAIR only. For more information about the PAIR system, see http://pair-direct.uspto.gov. Should you have questions on access to the Private PAIR system, contact the Electronic Business Center (EBC) at 866-217-9197 (toll-free). If you would like assistance from a USPTO Customer Service Representative or access to the automated information system, call 800-786-9199 (IN USA OR CANADA) or 571-272-1000.

/GLORIA HALE/
Primary Examiner, Art Unit 3765

***

Notice of References Cited	Application/Control No. 15/045,592	Applicant(s)/Patent Under Reexamination GOFF, SHARON	
	Examiner GLORIA HALE	Art Unit 3765	Page 1 of 1

U.S. PATENT DOCUMENTS

*		Document Number Country Code-Number-Kind Code	Date MM-YYYY	Name	CPC Classification	US Classification
*	A	US-2011/0244758 A1	10-2011	Boatright; Jeffrey S.	A41C3/0035	450/89
*	B	US-9,295,288 B1	03-2016	Goff; Sharon J.	A41C3/0035	1/1
*	C	US-2015/0296895 A1	10-2015	MUIR; KYLE GORDON	A41C3/0035	450/89
*	D	US-2013/0303052 A1	11-2013	Conrad; Christina	A41C3/0057	450/89
*	E	US-2014/0051331 A1	02-2014	Handras; Christina	A41C3/0035	450/89
*	F	US-2013/0288569 A1	10-2013	GENTRY; Mariah	A41C3/0035	450/86
*	G	US-2006/0121826 A1	06-2006	Nazzaro; Miya Brie	A41C3/0035	450/89
	H	US-				
	I	US-				
	J	US-				
	K	US-				
	L	US-				
	M	US-				

FOREIGN PATENT DOCUMENTS

*		Document Number Country Code-Number-Kind Code	Date MM-YYYY	Country	Name	CPC Classification
	N					
	O					
	P					
	Q					
	R					
	S					
	T					

NON-PATENT DOCUMENTS

*		Include as applicable: Author, Title Date, Publisher, Edition or Volume, Pertinent Pages)
	U	
	V	
	W	
	X	

*A copy of this reference is not being furnished with this Office action. (See MPEP § 707.05(a).)
Dates in MM-YYYY format are publication dates. Classifications may be US or foreign.

Index of Claims	Application/Control No.	Applicant(s)/Patent Under Reexamination
	15045592	GOFF, SHARON
	Examiner	**Art Unit**
	GLORIA HALE	3765

✓	Rejected	-	Cancelled	N	Non-Elected	A	Appeal
=	Allowed	÷	Restricted	I	Interference	O	Objected

☐ Claims renumbered in the same order as presented by applicant ☐ CPA ☐ T.D. ☐ R.1.47

CLAIM		DATE								
Final	Original	03/07/2016	02/13/2017							
	1	✓	✓							
	2	✓	-							
	3	✓	-							
	4	✓	✓							
	5	✓	-							
	6	✓	✓							
	7	✓	✓							
	8	✓	✓							
	9	✓	✓							
	10	✓	✓							
	11	✓	✓							
	12	✓	✓							
	13	✓	✓							
	14	✓	✓							
	15	✓	✓							
	16	✓	✓							
	17	✓	✓							
	18	✓	✓							
	19	✓	✓							

Search Notes	Application/Control No.	Applicant(s)/Patent Under Reexamination
	15045592	GOFF, SHARON
	Examiner	**Art Unit**
	GLORIA HALE	3765

CPC- SEARCHED

Symbol	Date	Examiner
A41C 3/00,0021,0028,0035,148,10,005	3-6-16	gh
updated	2-9-17	gh

CPC COMBINATION SETS - SEARCHED

Symbol	Date	Examiner

US CLASSIFICATION SEARCHED

Class	Subclass	Date	Examiner
450	36,39,89,54-57	3-6-16	gh
	updsated	2-9-17	gh

SEARCH NOTES

Search Notes	Date	Examiner
inv name srch;ids flag clred; review related apps/pats for DP	3-6-16	gh

INTERFERENCE SEARCH

US Class/ CPC Symbol	US Subclass / CPC Group	Date	Examiner

	/GLORIA HALE/ Primary Examiner.Art Unit 3765

Nike, Inc. v. SherryWear, LLC et al. IPR2024-01128 SherryWear, LLC Exhibit 2006 Page 113

To: lambert@lambertpatentlaw.com,shortell@lambertpatentlaw.com,connaughton@lambertpatentlaw.com
From: PAIR_eOfficeAction@uspto.gov
Cc: PAIR_eOfficeAction@uspto.gov
Subject: Private PAIR Correspondence Notification for Customer Number 32118

Feb 21, 2017 03:34:07 AM

Dear PAIR Customer:

LAMBERT & ASSOCIATES
92 STATE STREET
BOSTON, MA 02109-2004
UNITED STATES

The following USPTO patent application(s) associated with your Customer Number, 32118 , have new outgoing correspondence. This correspondence is now available for viewing in Private PAIR.

The official date of notification of the outgoing correspondence will be indicated on the form PTOL-90 accompanying the correspondence.

Disclaimer:
The list of documents shown below is provided as a courtesy and is not part of the official file wrapper. The content of the images shown in PAIR is the official record.

Application	Document	Mailroom Date	Attorney Docket No.
15045592	CTFR	02/21/2017	16-029-SG
	892	02/21/2017	16-029-SG

To view your correspondence online or update your email addresses, please visit us anytime at https://sportal.uspto.gov/secure/myportal/privatepair.

If you have any questions, please email the Electronic Business Center (EBC) at EBC@uspto.gov with 'e-Office Action' on the subject line or call 1-866-217-9197 during the following hours:

Monday - Friday 6:00 a.m. to 12:00 a.m.

Thank you for prompt attention to this notice,

UNITED STATES PATENT AND TRADEMARK OFFICE

PATENT APPLICATION INFORMATION RETRIEVAL SYSTEM

PTO/SB/30EFS (07-09)
Approved for use through 07/31/2012. OMB 0651-0031
U.S. Patent and Trademark Office; U.S. DEPARTMENT OF COMMERCE
Under the Paperwork Reduction Act of 1995, no persons are required to respond to a collection of information unless it contains a valid OMB control number.

REQUEST FOR CONTINUED EXAMINATION(RCE)TRANSMITTAL
(Submitted Only via EFS-Web)

Application Number	15045592	Filing Date	2016-02-17	Docket Number (if applicable)	16-029-SG	Art Unit	3765
First Named Inventor	Sharon Goff			Examiner Name	Hale, Gloria M.		

This is a Request for Continued Examination (RCE) under 37 CFR 1.114 of the above-identified application.
Request for Continued Examination (RCE) practice under 37 CFR 1.114 does not apply to any utility or plant application filed prior to June 8, 1995, or to any design application. The Instruction Sheet for this form is located at WWW.USPTO.GOV

SUBMISSION REQUIRED UNDER 37 CFR 1.114

Note: If the RCE is proper, any previously filed unentered amendments and amendments enclosed with the RCE will be entered in the order in which they were filed unless applicant instructs otherwise. If applicant does not wish to have any previously filed unentered amendment(s) entered, applicant must request non-entry of such amendment(s).

☐ Previously submitted. If a final Office action is outstanding, any amendments filed after the final Office action may be considered as a submission even if this box is not checked.

- ☐ Consider the arguments in the Appeal Brief or Reply Brief previously filed on _____
- ☐ Other _____

☒ Enclosed

- ☒ Amendment/Reply
- ☐ Information Disclosure Statement (IDS)
- ☐ Affidavit(s)/ Declaration(s)
- ☐ Other _____

MISCELLANEOUS

☐ Suspension of action on the above-identified application is requested under 37 CFR 1.103(c) for a period of months _____
(Period of suspension shall not exceed 3 months; Fee under 37 CFR 1.17(i) required)

☐ Other _____

FEES

☐ **The RCE fee under 37 CFR 1.17(e) is required by 37 CFR 1.114 when the RCE is filed.**
The Director is hereby authorized to charge any underpayment of fees, or credit any overpayments, to Deposit Account No _____

SIGNATURE OF APPLICANT, ATTORNEY, OR AGENT REQUIRED

X Patent Practitioner Signature
Applicant Signature

PTO/SB/30EFS (07-09)
Approved for use through 07/31/2012. OMB 0651-0031
U.S. Patent and Trademark Office; U.S. DEPARTMENT OF COMMERCE
Under the Paperwork Reduction Act of 1995, no persons are required to respond to a collection of information unless it contains a valid OMB control number.

Signature of Registered U.S. Patent Practitioner			
Signature	/David J. Connaughton, Jr/	Date (YYYY-MM-DD)	2017-04-10
Name	David J. Connaughton, Jr.	Registration Number	67275

This collection of information is required by 37 CFR 1.114. The information is required to obtain or retain a benefit by the public which is to file (and by the USPTO to process) an application. Confidentiality is governed by 35 U.S.C. 122 and 37 CFR 1.11 and 1.14. This collection is estimated to take 12 minutes to complete, including gathering, preparing, and submitting the completed application form to the USPTO. Time will vary depending upon the individual case. Any comments on the amount of time you require to complete this form and/or suggestions for reducing this burden, should be sent to the Chief Information Officer, U.S. Patent and Trademark Office, U.S. Department of Commerce, P.O. Box 1450, Alexandria, VA 22313-1450.

If you need assistance in completing the form, call 1-800-PTO-9199 and select option 2.

Privacy Act Statement

The Privacy Act of 1974 (P.L. 93-579) requires that you be given certain information in connection with your submission of the attached form related to a patent application or patent. Accordingly, pursuant to the requirements of the Act, please be advised that: (1) the general authority for the collection of this information is 35 U.S.C. 2(b)(2); (2) furnishing of the information solicited is voluntary; and (3) the principal purpose for which the information is used by the U.S. Patent and Trademark Office is to process and/or examine your submission related to a patent application or patent. If you do not furnish the requested information, the U.S. Patent and Trademark Office may not be able to process and/or examine your submission, which may result in termination of proceedings or abandonment of the application or expiration of the patent.

The information provided by you in this form will be subject to the following routine uses:

1. The information on this form will be treated confidentially to the extent allowed under the Freedom of Information Act (5 U.S.C. 552) and the Privacy Act (5 U.S.C. 552a). Records from this system of records may be disclosed to the Department of Justice to determine whether the Freedom of Information Act requires disclosure of these records.

2. A record from this system of records may be disclosed, as a routine use, in the course of presenting evidence to a court, magistrate, or administrative tribunal, including disclosures to opposing counsel in the course of settlement negotiations.

3. A record in this system of records may be disclosed, as a routine use, to a Member of Congress submitting a request involving an individual, to whom the record pertains, when the individual has requested assistance from the Member with respect to the subject matter of the record.

4. A record in this system of records may be disclosed, as a routine use, to a contractor of the Agency having need for the information in order to perform a contract. Recipients of information shall be required to comply with the requirements of the Privacy Act of 1974, as amended, pursuant to 5 U.S.C. 552a(m).

5. A record related to an International Application filed under the Patent Cooperation Treaty in this system of records may be disclosed, as a routine use, to the International Bureau of the World Intellectual Property Organization, pursuant to the Patent Cooperation Treaty.

6. A record in this system of records may be disclosed, as a routine use, to another federal agency for purposes of National Security review (35 U.S.C. 181) and for review pursuant to the Atomic Energy Act (42 U.S.C. 218(c)).

7. A record from this system of records may be disclosed, as a routine use, to the Administrator, General Services, or his/her designee, during an inspection of records conducted by GSA as part of that agency's responsibility to recommend improvements in records management practices and programs, under authority of 44 U.S.C. 2904 and 2906. Such disclosure shall be made in accordance with the GSA regulations governing inspection of records for this purpose, and any other relevant (i.e., GSA or Commerce) directive. Such disclosure shall not be used to make determinations about individuals.

8. A record from this system of records may be disclosed, as a routine use, to the public after either publication of the application pursuant to 35 U.S.C. 122(b) or issuance of a patent pursuant to 35 U.S.C. 151. Further, a record may be disclosed, subject to the limitations of 37 CFR 1.14, as a routine use, to the public if the record was filed in an application which became abandoned or in which the proceedings were terminated and which application is referenced by either a published application, an application open to public inspections or an issued patent.

9. A record from this system of records may be disclosed, as a routine use, to a Federal, State, or local law enforcement agency, if the USPTO becomes aware of a violation or potential violation of law or regulation.

Docket No. 16-029-SG

UNITED STATES PATENT AND TRADEMARK OFFICE

Serial No.: 15/045,592
Applicant: Sharon Goff
Filed: February 17, 2016
Examiner: Hale, Gloria M.
Art Unit: 3765

Lambert & Associates
92 State Street
Boston, MA 02109

Commissioner for Patents
P.O. Box 1450
Alexandria, VA 22313-1450

AMENDMENT AND RESPONSE TO FEBRUARY 21st, 2017 FINAL OFFICE ACTION

This is a response to the Office Action issued on February 21, 2017 by the U.S. Patent and Trademark Office in connection with the above-identified application. A response to the February 21, 2017 Office Action is due May 21, 2017. Accordingly, this response is being timely filed.

Amendments to the Claims:

This listing of claims will replace all prior versions, and listings, of claims in the application:

1. (Currently Amended) A pocketed bra assembly comprising:

a strap assembly including a chest strap;

a left cup and a right cup, each cup being an area to receive a breast of a wearer having inside and outside surfaces, the strap assembly being attached to the cups whereby the strap assembly holds the cups to a wearer, with the chest strap extending from the left cup towards the wearer's back and extending from the right cup towards the wearer's back;

a side patch on one of an inside or outside surface of the chest strap adjacent to at least one of the left cup and right cups, the side patch having upper and lower edges along at least part of a length of the chest strap, and side edges, the side patch upper edge lying along a same edge line as at least a portion of a top edge of the chest strap, the side patch having stitching along the lower and side edges thus forming an upper opening such that the side patch forms a pocket, the upper opening capable of repeated receiving and removal of an item when being worn by the wearer; and

an item removably positioned in the pocket.

2. (Canceled)

3. (Canceled).

4. (Currently Amended) The bra assembly of claim 1 and further including a handheld electronic device, the handheld electronic device placed within the side pocket.

5. (Canceled).

6. (Currently Amended) The bra assembly of claim 1 wherein the strap assembly further comprises two shoulder straps, and a central area at a back of the strap assembly opposite to the left and right cups, the two shoulder straps and chest strap joining together at the central area, and further comprising a back pocket on the central area.

7. (Currently Amended) The bra assembly of claim 1 wherein the side pocket further comprises a closure, the closure having a first part on the side of the chest strap, and a second part on the patch, the first part connectable to the second part to close the pocket.

8. (Currently Amended) The bra assembly of claim 1 wherein the upper edge of the side patch is aligned with a top edge of the chest strap.

9. (Currently Amended) The bra assembly of claim 1 further comprising a pocket flap, the pocket flap extending from the chest strap over the upper opening.

10. (Currently Amended) The bra assembly of claim 9 further comprising a closure, the closure configured to connect the pocket flap to the side patch in a closed position.

11. (Currently Amended) The bra assembly of claim 7 wherein the closure is a hook and loop connector.

12. (Currently Amended) The bra assembly of claim 7 wherein the closure is a button and button hole.

13. (Currently Amended) The bra assembly of claim 7 wherein the closure is a snap fitting.

14. (Currently Amended) The bra assembly of claim 7 wherein the closure is a zipper.

15. (Currently Amended) The bra assembly of claim 1 further comprising a piping attached to the upper edge of the side patch.

16. (Currently Amended) The bra assembly of claim 1 wherein the bra is formed at least partially of a radio frequency shielding fabric.

17. (Currently Amended) The bra assembly of claim 1 further comprising a central patch attached intermediate to the left and right cups, the central patch forming a central chamber pocket.

18. (Canceled).

19. (Currently Amended) A chest covering comprising:

a strap assembly including a chest strap;

a left cup and a right cup, each cup being an area to receive a breast of a wearer, and having inside and outside surfaces, the strap assembly being attached to the cups whereby the strap assembly holds the cups to a wearer, with the chest strap extending from the left cup towards the wearer's back and extending from the right cup towards the wearer's back;

a side patch on one of an inside or outside surface of the chest strap adjacent to at least one of the left cup and right cups, the side patch having upper and lower edges along at least part of a length of the chest strap, and side edges, the side patch upper edge lying along a same edge line as at least a portion of a top edge of the chest strap, the side patch having stitching along the lower and side edges thus forming an upper opening such that

the side patch forms a pocket, the upper opening capable of repeated receiving and removal of an item when being worn by the wearer.

20. (New) The bra assembly of claim 1 wherein the lower edge of the side patch is lying along a same edge line as a bottom edge of the chest strap.

21. (New) The bra assembly of claim 1 wherein a front side edge of the side patch abuts an edge of the at least one of the left cup and the right cup, the pocket extending to the edge of the at least one of the left cup and the right cup.

Remarks

Applicant thanks the Office for the attention accorded to the present application in the February 21, 2017 Office Action. Claims 1, 4, and 6-19 were pending in the subject application.

Without prejudice or disclaimer, claims 1, 4, 6-17, and 19 have been amended and claims 20 and 21 have been added. Upon entry of this amendment, claims 1, 4, 6-17, 19, and 20-21 will be pending in the present application.

The amendments to the claims are primarily to correct matters of form and/or clarity in response to the Office's recommendation. Applicant asserts that all claims are supported in the specification as originally filed. No new matter has been added.

The claim amendments and cancellations made herein are made solely to expedite prosecution of the instant application, and should not be construed as acquiescence to the Office's rejections. Applicant reserves the right to pursue the cancelled and/or non-elected subject matter in one or more divisional or continuation applications.

Applicant respectfully traverses all rejections and asserts that the claims are now in condition for allowance.

Rejection based 35 U.S.C. §112, Second Paragraph

In the present Office Action, the Examiner rejected claims 1, 4, and 6-19 under 35 U.S.C. §112, second paragraph, as being indefinite for failing to particularly point out and distinctly claim the subject matter which Applicant regards as the invention. In response, Applicant has herein amended claims 1, 4, and 19, and canceled claim 18, to clarify the invention contemplated within. Specifically regarding the upper opening limitation,

Applicant respectfully notes that the capability of repeated receiving and removal of an item when being worn by the wearer clarifies the structure of the opening in that it remains an opening when worn by the wearer. This is in contrast to some prior art which requires the opening to be permanently stitched closed before wearing by a user. Accordingly, this functional limitation clarifies the structural requirement of the opening as a permanent opening and definitively structurally distinguishes from the prior art. As such, Applicant respectfully asserts that the 35 U.S.C. 112 rejections are now moot, and Applicant respectfully requests that the Examiner remove the rejection.

Double Patenting

Claims 1, 4, and 6-19 are rejected on the ground of nonstatutory obviousness-type double patenting as being unpatentable over claims 1-9 of U.S. Patent No. 8597072; claims 1-7 of US Patent Application 14/614873(US9289016) and 1-17 of US Patent Application 14/082777.

Without acceding to the propriety of the rejection, Applicant asserts that the amendments to claims 1 and 19, and claims depending therefrom distinguish from the cited patents and patent application. As such, Applicant asserts that the double patenting rejection is now moot, and respectfully requests that Examiner remove this ground of rejection.

35 U.S.C. 102 Rejections

In the present Office Action, the Examiner rejected claims 1, 4, 8, 18 and 19 under 35 U.S.C. 102(a)(1) as being anticipated by Boatright et al (US 2011/0244758).

Without prejudice or disclaimer, Applicant has amended claims 1 and 19 to further clarify from Boatright et al.. Specifically, Applicant respectfully asserts that Boatright does not teach the side patch upper edge lying along a same edge line as at least a portion of a top edge of the chest strap. This can be clearly seen in Boatright Figs. 5(a)-(d). Thus, Applicant respectfully asserts that Boatright does not anticipate the invention of claim 1.

As such, Applicant respectfully asserts that the 35 U.S.C. 102(a)(1) rejection based on Boatright is overcome, and respectfully requests that the Examiner remove this rejection.

Rejections under 35 U.S.C. § 103(a)

The Examiner has rejected claim 15 under 35 U.S.C. 103(a) as being unpatentable over Boatright in view of Maclaren (US 7585200).

Without prejudice or disclaimer, Applicant has amended claim 1, from which claim 15 depends. Maclaren does not teach the elements of claim 1 that are missing from Boatright. Therefore, the combination of references does not establish a prima facie case of obviousness under 35 U.S.C. 103(a).

Thus, Applicant respectfully asserts that claim 15 is now patentably distinguished from Boatright in view of Maclaren. Applicant further asserts that this claim is now in condition for allowance.

The Examiner has rejected claims 7 and 11-14 under 35 U.S.C. 103(a) as being unpatentable over Boatright (US 4699144) in view of Gentry (US 20130288569).

Without prejudice or disclaimer, Applicant has amended claim 1, from which claims 7 and 11-14 depend. Gentry does not teach the elements of claim 1 that are missing from Boatright. Therefore, the combination of references does not establish a prima facie case of obviousness under 35 U.S.C. 103(a).

Thus, Applicant respectfully asserts that claims 7 and 11-14 are now patentably distinguished from Boatright in view of Gentry. Applicant further asserts that these claims are now in condition for allowance.

The Examiner has rejected claims 17 under 35 U.S.C 103(a) as being unpatentable over Boatright et al in view of Schlussel (US 2610325).

Without prejudice or disclaimer, Applicant has amended claim 1, from which claim 17 depends. Schlussel does not teach the elements of claim 1 that are missing from Boatright. Therefore the combination of references does not form a prima facie case of obviousness under 35 U.S.C 103(a), and thus Applicant asserts that this claim is patentably distinguished from the combination of Boatright and Schlussel. Applicant further asserts that these claims are now in condition for allowance.

The Examiner has rejected claims 16 under 35 U.S.C 103(a) as being unpatentable over Boatright et al in view of Dockman (US 20130248064).

Without prejudice of disclaimer, Applicant has amended claim 1, from which claim 16 depends. Dockman does not teach the elements of claim 1 that are missing from Boatright. Therefore the combination of references does not form a prima facie case of obviousness under 35 U.S.C 103(a), and thus Applicant asserts that this claim is patentably

distinguished from the combination of Boatright and Dockman. Applicant further asserts that these claims are now in condition for allowance.

Comments on Newly Added Claims

Applicant has added new claims 20 and 21 which are believed to even further distinguish from the prior art. Regarding claim 20, none of the prior art teaches "wherein the lower edge of the side patch is lying along a same edge line as a bottom edge of the chest strap" in addition to the other claim elements of claim 1, nor would it be obvious to modify any of the prior art to have this claimed structure. Regarding claim 21, none of the prior art teaches "wherein a front side edge of the side patch abuts an edge of the at least one of the left cup and the right cup, the pocket extending to the edge of the at least one of the left cup and the right cup" in addition to the other elements of claim 1, nor would it be obvious to modify any of the prior art to have this claimed structure.

Conclusion

Applicant again thanks the Office for the attention accorded to the present Application in the February 21, 2017 office action. Applicant has herein amended claims 1, 4, 6-17 and 19, and added claims 20 and 21. Applicant asserts that based on the amendments and comments presented herein, all of the pending claims are in condition for allowance. Early and favorable action is respectfully requested.

The Examiner is invited to telephone the undersigned, Applicant's attorney of record, to facilitate advancement of the present application.

Respectfully submitted,

/David J. Connaughton, Jr./
David J. Connaughton, Jr.
USPTO Reg. #67275
LAMBERT & ASSOCIATES
92 State Street
Boston, MA 02109
(617) 720-0091

Electronic Patent Application Fee Transmittal

Application Number:	15045592
Filing Date:	17-Feb-2016
Title of Invention:	POCKET BRA SYSTEM
First Named Inventor/Applicant Name:	Sharon Goff
Filer:	Gary Ervery Lambert
Attorney Docket Number:	16-029-SG

Filed as Small Entity

Filing Fees for Utility under 35 USC 111(a)

Description	Fee Code	Quantity	Amount	Sub-Total in USD($)
Basic Filing:				
Pages:				
Claims:				
Miscellaneous-Filing:				
Petition:				
Patent-Appeals-and-Interference:				
Post-Allowance-and-Post-Issuance:				
Extension-of-Time:				

Description	Fee Code	Quantity	Amount	Sub-Total in USD($)
Miscellaneous:				
RCE- 1st Request	2801	1	600	600
		Total in USD ($)		**600**

Electronic Acknowledgement Receipt

EFS ID:	28895778
Application Number:	15045592
International Application Number:	
Confirmation Number:	3326
Title of Invention:	POCKET BRA SYSTEM
First Named Inventor/Applicant Name:	Sharon Goff
Customer Number:	32118
Filer:	Gary Ervery Lambert
Filer Authorized By:	
Attorney Docket Number:	16-029-SG
Receipt Date:	11-APR-2017
Filing Date:	17-FEB-2016
Time Stamp:	16:19:22
Application Type:	Utility under 35 USC 111(a)

Payment information:

Submitted with Payment	yes
Payment Type	CARD
Payment was successfully received in RAM	$600
RAM confirmation Number	041217INTEFSW16203100
Deposit Account	
Authorized User	

The Director of the USPTO is hereby authorized to charge indicated fees and credit any overpayment as follows:

File Listing:

Document Number	Document Description	File Name	File Size(Bytes)/ Message Digest	Multi Part /.zip	Pages (if appl.)
1	Request for Continued Examination (RCE)	RCE.pdf	697849 fe7f1bfe5169d4959781551f822462f070a1f187	no	3
Warnings:					
Information:					
2		Final-OA-Response-16-029-SG.pdf	46739 7e9a45f370c61588ab8e1a7fc06713af465f7b73	yes	11

Multipart Description/PDF files in .zip description

Document Description	Start	End
Amendment Submitted/Entered with Filing of CPA/RCE	1	1
Claims	2	5
Applicant Arguments/Remarks Made in an Amendment	6	11

Warnings:					
Information:					
3	Fee Worksheet (SB06)	fee-info.pdf	30184 eafc270531ffd97dd56cec1061e87a07bdc82c80	no	2
Warnings:					
Information:					
			Total Files Size (in bytes):	774772	

This Acknowledgement Receipt evidences receipt on the noted date by the USPTO of the indicated documents, characterized by the applicant, and including page counts, where applicable. It serves as evidence of receipt similar to a Post Card, as described in MPEP 503.

New Applications Under 35 U.S.C. 111
If a new application is being filed and the application includes the necessary components for a filing date (see 37 CFR 1.53(b)-(d) and MPEP 506), a Filing Receipt (37 CFR 1.54) will be issued in due course and the date shown on this Acknowledgement Receipt will establish the filing date of the application.

National Stage of an International Application under 35 U.S.C. 371
If a timely submission to enter the national stage of an international application is compliant with the conditions of 35 U.S.C. 371 and other applicable requirements a Form PCT/DO/EO/903 indicating acceptance of the application as a national stage submission under 35 U.S.C. 371 will be issued in addition to the Filing Receipt, in due course.

New International Application Filed with the USPTO as a Receiving Office
If a new international application is being filed and the international application includes the necessary components for an international filing date (see PCT Article 11 and MPEP 1810), a Notification of the International Application Number and of the International Filing Date (Form PCT/RO/105) will be issued in due course, subject to prescriptions concerning national security, and the date shown on this Acknowledgement Receipt will establish the international filing date of the application.

PTO/SB/06 (09-11)
Approved for use through 1/31/2014. OMB 0651-0032
U.S. Patent and Trademark Office; U.S. DEPARTMENT OF COMMERCE
Under the Paperwork Reduction Act of 1995, no persons are required to respond to a collection of information unless it displays a valid OMB control number.

PATENT APPLICATION FEE DETERMINATION RECORD

Substitute for Form PTO-875

Application or Docket Number	Filing Date	
15/045,592	02/17/2016	☐ To be Mailed

ENTITY: ☐ LARGE ☒ SMALL ☐ MICRO

APPLICATION AS FILED – PART I

FOR	(Column 1) NUMBER FILED	(Column 2) NUMBER EXTRA	RATE ($)	FEE ($)
☐ BASIC FEE (37 CFR 1.16(a), (b), or (c))	N/A	N/A	N/A	
☐ SEARCH FEE (37 CFR 1.16(k), (i), or (m))	N/A	N/A	N/A	
☐ EXAMINATION FEE (37 CFR 1.16(o), (p), or (q))	N/A	N/A	N/A	
TOTAL CLAIMS (37 CFR 1.16(i))	minus 20 =	*	x $ =	
INDEPENDENT CLAIMS (37 CFR 1.16(h))	minus 3 =	*	x $ =	
☐ APPLICATION SIZE FEE (37 CFR 1.16(s))	If the specification and drawings exceed 100 sheets of paper, the application size fee due is $310 ($155 for small entity) for each additional 50 sheets or fraction thereof. See 35 U.S.C. 41(a)(1)(G) and 37 CFR 1.16(s).			
☐ MULTIPLE DEPENDENT CLAIM PRESENT (37 CFR 1.16(j))				
* If the difference in column 1 is less than zero, enter "0" in column 2.			TOTAL	

APPLICATION AS AMENDED – PART II

AMENDMENT

04/11/2017	(Column 1) CLAIMS REMAINING AFTER AMENDMENT		(Column 2) HIGHEST NUMBER PREVIOUSLY PAID FOR	(Column 3) PRESENT EXTRA	RATE ($)	ADDITIONAL FEE ($)
Total (37 CFR 1.16(i))	* 17	Minus	** 20	= 0	x $40 =	0
Independent (37 CFR 1.16(h))	* 2	Minus	***3	= 0	x $210 =	0
☐ Application Size Fee (37 CFR 1.16(s))						
☐ FIRST PRESENTATION OF MULTIPLE DEPENDENT CLAIM (37 CFR 1.16(j))						
					TOTAL ADD'L FEE	0

AMENDMENT

	(Column 1) CLAIMS REMAINING AFTER AMENDMENT		(Column 2) HIGHEST NUMBER PREVIOUSLY PAID FOR	(Column 3) PRESENT EXTRA	RATE ($)	ADDITIONAL FEE ($)
Total (37 CFR 1.16(i))	*	Minus	**	=	x $ =	
Independent (37 CFR 1.16(h))	*	Minus	***	=	x $ =	
☐ Application Size Fee (37 CFR 1.16(s))						
☐ FIRST PRESENTATION OF MULTIPLE DEPENDENT CLAIM (37 CFR 1.16(j))						
					TOTAL ADD'L FEE	

* If the entry in column 1 is less than the entry in column 2, write "0" in column 3.
** If the "Highest Number Previously Paid For" IN THIS SPACE is less than 20, enter "20".
*** If the "Highest Number Previously Paid For" IN THIS SPACE is less than 3, enter "3".
The "Highest Number Previously Paid For" (Total or Independent) is the highest number found in the appropriate box in column 1.

LIE
STELLA LITTLE

This collection of information is required by 37 CFR 1.16. The information is required to obtain or retain a benefit by the public which is to file (and by the USPTO to process) an application. Confidentiality is governed by 35 U.S.C. 122 and 37 CFR 1.14. This collection is estimated to take 12 minutes to complete, including gathering, preparing, and submitting the completed application form to the USPTO. Time will vary depending upon the individual case. Any comments on the amount of time you require to complete this form and/or suggestions for reducing this burden, should be sent to the Chief Information Officer, U.S. Patent and Trademark Office, U.S. Department of Commerce, P.O. Box 1450, Alexandria, VA 22313-1450. DO NOT SEND FEES OR COMPLETED FORMS TO THIS ADDRESS. **SEND TO: Commissioner for Patents, P.O. Box 1450, Alexandria, VA 22313-1450.**
If you need assistance in completing the form, call 1-800-PTO-9199 and select option 2.

UNITED STATES PATENT AND TRADEMARK OFFICE

UNITED STATES DEPARTMENT OF COMMERCE
United States Patent and Trademark Office
Address: COMMISSIONER FOR PATENTS
P.O. Box 1450
Alexandria, Virginia 22313-1450
www.uspto.gov

NOTICE OF ALLOWANCE AND FEE(S) DUE

32118 7590 05/23/2017
LAMBERT & ASSOCIATES
92 STATE STREET
BOSTON, MA 02109-2004

EXAMINER
HALE, GLORIA M

ART UNIT	PAPER NUMBER
3765	

DATE MAILED: 05/23/2017

APPLICATION NO.	FILING DATE	FIRST NAMED INVENTOR	ATTORNEY DOCKET NO.	CONFIRMATION NO.
15/045,592	02/17/2016	Sharon Goff	16-029-SG	3326

TITLE OF INVENTION: POCKET BRA SYSTEM

APPLN. TYPE	ENTITY STATUS	ISSUE FEE DUE	PUBLICATION FEE DUE	PREV. PAID ISSUE FEE	TOTAL FEE(S) DUE	DATE DUE
nonprovisional	SMALL	$480	$0	$0	$480	08/23/2017

THE APPLICATION IDENTIFIED ABOVE HAS BEEN EXAMINED AND IS ALLOWED FOR ISSUANCE AS A PATENT. PROSECUTION ON THE MERITS IS CLOSED. THIS NOTICE OF ALLOWANCE IS NOT A GRANT OF PATENT RIGHTS. THIS APPLICATION IS SUBJECT TO WITHDRAWAL FROM ISSUE AT THE INITIATIVE OF THE OFFICE OR UPON PETITION BY THE APPLICANT. SEE 37 CFR 1.313 AND MPEP 1308.

THE ISSUE FEE AND PUBLICATION FEE (IF REQUIRED) MUST BE PAID WITHIN THREE MONTHS FROM THE MAILING DATE OF THIS NOTICE OR THIS APPLICATION SHALL BE REGARDED AS ABANDONED. THIS STATUTORY PERIOD CANNOT BE EXTENDED. SEE 35 U.S.C. 151. THE ISSUE FEE DUE INDICATED ABOVE DOES NOT REFLECT A CREDIT FOR ANY PREVIOUSLY PAID ISSUE FEE IN THIS APPLICATION. IF AN ISSUE FEE HAS PREVIOUSLY BEEN PAID IN THIS APPLICATION (AS SHOWN ABOVE), THE RETURN OF PART B OF THIS FORM WILL BE CONSIDERED A REQUEST TO REAPPLY THE PREVIOUSLY PAID ISSUE FEE TOWARD THE ISSUE FEE NOW DUE.

HOW TO REPLY TO THIS NOTICE:

I. Review the ENTITY STATUS shown above. If the ENTITY STATUS is shown as SMALL or MICRO, verify whether entitlement to that entity status still applies.

If the ENTITY STATUS is the same as shown above, pay the TOTAL FEE(S) DUE shown above.

If the ENTITY STATUS is changed from that shown above, on PART B - FEE(S) TRANSMITTAL, complete section number 5 titled "Change in Entity Status (from status indicated above)".

For purposes of this notice, small entity fees are 1/2 the amount of undiscounted fees, and micro entity fees are 1/2 the amount of small entity fees.

II. PART B - FEE(S) TRANSMITTAL, or its equivalent, must be completed and returned to the United States Patent and Trademark Office (USPTO) with your ISSUE FEE and PUBLICATION FEE (if required). If you are charging the fee(s) to your deposit account, section "4b" of Part B - Fee(s) Transmittal should be completed and an extra copy of the form should be submitted. If an equivalent of Part B is filed, a request to reapply a previously paid issue fee must be clearly made, and delays in processing may occur due to the difficulty in recognizing the paper as an equivalent of Part B.

III. All communications regarding this application must give the application number. Please direct all communications prior to issuance to Mail Stop ISSUE FEE unless advised to the contrary.

IMPORTANT REMINDER: Utility patents issuing on applications filed on or after Dec. 12, 1980 may require payment of maintenance fees. It is patentee's responsibility to ensure timely payment of maintenance fees when due.

Nike, Inc. v. SherryWear, LLC et al. IPR2024-01128 SherryWear, LLC Exhibit 2066 Page 135

PART B - FEE(S) TRANSMITTAL

Complete and send this form, together with applicable fee(s), to: Mail **Mail Stop ISSUE FEE**
Commissioner for Patents
P.O. Box 1450
Alexandria, Virginia 22313-1450
or Fax (571)-273-2885

INSTRUCTIONS: This form should be used for transmitting the ISSUE FEE and PUBLICATION FEE (if required). Blocks 1 through 5 should be completed where appropriate. All further correspondence including the Patent, advance orders and notification of maintenance fees will be mailed to the current correspondence address as indicated unless corrected below or directed otherwise in Block 1, by (a) specifying a new correspondence address; and/or (b) indicating a separate "FEE ADDRESS" for maintenance fee notifications.

CURRENT CORRESPONDENCE ADDRESS (Note: Use Block 1 for any change of address)

32118 7590 05/23/2017
LAMBERT & ASSOCIATES
92 STATE STREET
BOSTON, MA 02109-2004

Note: A certificate of mailing can only be used for domestic mailings of the Fee(s) Transmittal. This certificate cannot be used for any other accompanying papers. Each additional paper, such as an assignment or formal drawing, must have its own certificate of mailing or transmission.

Certificate of Mailing or Transmission
I hereby certify that this Fee(s) Transmittal is being deposited with the United States Postal Service with sufficient postage for first class mail in an envelope addressed to the Mail Stop ISSUE FEE address above, or being facsimile transmitted to the USPTO (571) 273-2885, on the date indicated below.

(Depositor's name)
(Signature)
(Date)

APPLICATION NO.	FILING DATE	FIRST NAMED INVENTOR	ATTORNEY DOCKET NO.	CONFIRMATION NO.
15/045,592	02/17/2016	Sharon Goff	16-029-SG	3326

TITLE OF INVENTION: POCKET BRA SYSTEM

APPLN. TYPE	ENTITY STATUS	ISSUE FEE DUE	PUBLICATION FEE DUE	PREV. PAID ISSUE FEE	TOTAL FEE(S) DUE	DATE DUE
nonprovisional	SMALL	$480	$0	$0	$480	08/23/2017

EXAMINER	ART UNIT	CLASS-SUBCLASS
HALE, GLORIA M	3765	450-089000

1. Change of correspondence address or indication of "Fee Address" (37 CFR 1.363).
❑ Change of correspondence address (or Change of Correspondence Address form PTO/SB/122) attached.
❑ "Fee Address" indication (or "Fee Address" Indication form PTO/SB/47; Rev 03-02 or more recent) attached. **Use of a Customer Number is required.**

2. For printing on the patent front page, list
(1) The names of up to 3 registered patent attorneys or agents OR, alternatively,
(2) The name of a single firm (having as a member a registered attorney or agent) and the names of up to 2 registered patent attorneys or agents. If no name is listed, no name will be printed.
1_____
2_____
3_____

3. ASSIGNEE NAME AND RESIDENCE DATA TO BE PRINTED ON THE PATENT (print or type)

PLEASE NOTE: Unless an assignee is identified below, no assignee data will appear on the patent. If an assignee is identified below, the document has been filed for recordation as set forth in 37 CFR 3.11. Completion of this form is NOT a substitute for filing an assignment.

(A) NAME OF ASSIGNEE (B) RESIDENCE: (CITY and STATE OR COUNTRY)

Please check the appropriate assignee category or categories (will not be printed on the patent) : ❑ Individual ❑ Corporation or other private group entity ❑ Government

4a. The following fee(s) are submitted:
❑ Issue Fee
❑ Publication Fee (No small entity discount permitted)
❑ Advance Order - # of Copies _____

4b. Payment of Fee(s): (**Please first reapply any previously paid issue fee shown above**)
❑ A check is enclosed.
❑ Payment by credit card. Form PTO-2038 is attached.
❑ The director is hereby authorized to charge the required fee(s), any deficiency, or credits any overpayment, to Deposit Account Number _____ (enclose an extra copy of this form).

5. **Change in Entity Status** (from status indicated above)
❑ Applicant certifying micro entity status. See 37 CFR 1.29 — NOTE: Absent a valid certification of Micro Entity Status (see forms PTO/SB/15A and 15B), issue fee payment in the micro entity amount will not be accepted at the risk of application abandonment.
❑ Applicant asserting small entity status. See 37 CFR 1.27 — NOTE: If the application was previously under micro entity status, checking this box will be taken to be a notification of loss of entitlement to micro entity status.
❑ Applicant changing to regular undiscounted fee status. — NOTE: Checking this box will be taken to be a notification of loss of entitlement to small or micro entity status, as applicable.

NOTE: This form must be signed in accordance with 37 CFR 1.31 and 1.33. See 37 CFR 1.4 for signature requirements and certifications.

Authorized Signature _____ Date _____

Typed or printed name _____ Registration No. _____

UNITED STATES PATENT AND TRADEMARK OFFICE

UNITED STATES DEPARTMENT OF COMMERCE
United States Patent and Trademark Office
Address: COMMISSIONER FOR PATENTS
P.O. Box 1450
Alexandria, Virginia 22313-1450
www.uspto.gov

APPLICATION NO.	FILING DATE	FIRST NAMED INVENTOR	ATTORNEY DOCKET NO.	CONFIRMATION NO.
15/045,592	02/17/2016	Sharon Goff	16-029-SG	3326

32118 7590 05/23/2017
LAMBERT & ASSOCIATES
92 STATE STREET
BOSTON, MA 02109-2004

EXAMINER
HALE, GLORIA M

ART UNIT	PAPER NUMBER
3765	

DATE MAILED: 05/23/2017

Determination of Patent Term Adjustment under 35 U.S.C. 154 (b)
(Applications filed on or after May 29, 2000)

The Office has discontinued providing a Patent Term Adjustment (PTA) calculation with the Notice of Allowance.

Section 1(h)(2) of the AIA Technical Corrections Act amended 35 U.S.C. 154(b)(3)(B)(i) to eliminate the requirement that the Office provide a patent term adjustment determination with the notice of allowance. See Revisions to Patent Term Adjustment, 78 Fed. Reg. 19416, 19417 (Apr. 1, 2013). Therefore, the Office is no longer providing an initial patent term adjustment determination with the notice of allowance. The Office will continue to provide a patent term adjustment determination with the Issue Notification Letter that is mailed to applicant approximately three weeks prior to the issue date of the patent, and will include the patent term adjustment on the patent. Any request for reconsideration of the patent term adjustment determination (or reinstatement of patent term adjustment) should follow the process outlined in 37 CFR 1.705.

Any questions regarding the Patent Term Extension or Adjustment determination should be directed to the Office of Patent Legal Administration at (571)-272-7702. Questions relating to issue and publication fee payments should be directed to the Customer Service Center of the Office of Patent Publication at 1-(888)-786-0101 or (571)-272-4200.

Nike, Inc. v. SherryWear, LLC et al. IPR2024-01128 SherryWear, LLC Exhibit 2066 Page 137

OMB Clearance and PRA Burden Statement for PTOL-85 Part B

The Paperwork Reduction Act (PRA) of 1995 requires Federal agencies to obtain Office of Management and Budget approval before requesting most types of information from the public. When OMB approves an agency request to collect information from the public, OMB (i) provides a valid OMB Control Number and expiration date for the agency to display on the instrument that will be used to collect the information and (ii) requires the agency to inform the public about the OMB Control Number's legal significance in accordance with 5 CFR 1320.5(b).

The information collected by PTOL-85 Part B is required by 37 CFR 1.311. The information is required to obtain or retain a benefit by the public which is to file (and by the USPTO to process) an application. Confidentiality is governed by 35 U.S.C. 122 and 37 CFR 1.14. This collection is estimated to take 12 minutes to complete, including gathering, preparing, and submitting the completed application form to the USPTO. Time will vary depending upon the individual case. Any comments on the amount of time you require to complete this form and/or suggestions for reducing this burden, should be sent to the Chief Information Officer, U.S. Patent and Trademark Office, U.S. Department of Commerce, P.O. Box 1450, Alexandria, Virginia 22313-1450. DO NOT SEND FEES OR COMPLETED FORMS TO THIS ADDRESS. SEND TO: Commissioner for Patents, P.O. Box 1450, Alexandria, Virginia 22313-1450. Under the Paperwork Reduction Act of 1995, no persons are required to respond to a collection of information unless it displays a valid OMB control number.

Privacy Act Statement

The Privacy Act of 1974 (P.L. 93-579) requires that you be given certain information in connection with your submission of the attached form related to a patent application or patent. Accordingly, pursuant to the requirements of the Act, please be advised that: (1) the general authority for the collection of this information is 35 U.S.C. 2(b)(2); (2) furnishing of the information solicited is voluntary; and (3) the principal purpose for which the information is used by the U.S. Patent and Trademark Office is to process and/or examine your submission related to a patent application or patent. If you do not furnish the requested information, the U.S. Patent and Trademark Office may not be able to process and/or examine your submission, which may result in termination of proceedings or abandonment of the application or expiration of the patent.

The information provided by you in this form will be subject to the following routine uses:

1. The information on this form will be treated confidentially to the extent allowed under the Freedom of Information Act (5 U.S.C. 552) and the Privacy Act (5 U.S.C 552a). Records from this system of records may be disclosed to the Department of Justice to determine whether disclosure of these records is required by the Freedom of Information Act.
2. A record from this system of records may be disclosed, as a routine use, in the course of presenting evidence to a court, magistrate, or administrative tribunal, including disclosures to opposing counsel in the course of settlement negotiations.
3. A record in this system of records may be disclosed, as a routine use, to a Member of Congress submitting a request involving an individual, to whom the record pertains, when the individual has requested assistance from the Member with respect to the subject matter of the record.
4. A record in this system of records may be disclosed, as a routine use, to a contractor of the Agency having need for the information in order to perform a contract. Recipients of information shall be required to comply with the requirements of the Privacy Act of 1974, as amended, pursuant to 5 U.S.C. 552a(m).
5. A record related to an International Application filed under the Patent Cooperation Treaty in this system of records may be disclosed, as a routine use, to the International Bureau of the World Intellectual Property Organization, pursuant to the Patent Cooperation Treaty.
6. A record in this system of records may be disclosed, as a routine use, to another federal agency for purposes of National Security review (35 U.S.C. 181) and for review pursuant to the Atomic Energy Act (42 U.S.C. 218(c)).
7. A record from this system of records may be disclosed, as a routine use, to the Administrator, General Services, or his/her designee, during an inspection of records conducted by GSA as part of that agency's responsibility to recommend improvements in records management practices and programs, under authority of 44 U.S.C. 2904 and 2906. Such disclosure shall be made in accordance with the GSA regulations governing inspection of records for this purpose, and any other relevant (i.e., GSA or Commerce) directive. Such disclosure shall not be used to make determinations about individuals.
8. A record from this system of records may be disclosed, as a routine use, to the public after either publication of the application pursuant to 35 U.S.C. 122(b) or issuance of a patent pursuant to 35 U.S.C. 151. Further, a record may be disclosed, subject to the limitations of 37 CFR 1.14, as a routine use, to the public if the record was filed in an application which became abandoned or in which the proceedings were terminated and which application is referenced by either a published application, an application open to public inspection or an issued patent.
9. A record from this system of records may be disclosed, as a routine use, to a Federal, State, or local law enforcement agency, if the USPTO becomes aware of a violation or potential violation of law or regulation.

Notice of Allowability	Application No. 15/045,592	Applicant(s) GOFF, SHARON	
	Examiner GLORIA HALE	Art Unit 3765	AIA (First Inventor to File) Status Yes

-- The MAILING DATE of this communication appears on the cover sheet with the correspondence address--

All claims being allowable, PROSECUTION ON THE MERITS IS (OR REMAINS) CLOSED in this application. If not included herewith (or previously mailed), a Notice of Allowance (PTOL-85) or other appropriate communication will be mailed in due course. **THIS NOTICE OF ALLOWABILITY IS NOT A GRANT OF PATENT RIGHTS.** This application is subject to withdrawal from issue at the initiative of the Office or upon petition by the applicant. See 37 CFR 1.313 and MPEP 1308.

1. ☒ This communication is responsive to *4-11-17 RCE Amendment*.
   ☐ A declaration(s)/affidavit(s) under **37 CFR 1.130(b)** was/were filed on_____.
2. ☐ An election was made by the applicant in response to a restriction requirement set forth during the interview on _____; the restriction requirement and election have been incorporated into this action.
3. ☒ The allowed claim(s) is/are *1,4,6-16 and 18-21*. As a result of the allowed claim(s), you may be eligible to benefit from the **Patent Prosecution Highway** program at a participating intellectual property office for the corresponding application. For more information, please see http://www.uspto.gov/patents/init_events/pph/index.jsp or send an inquiry to PPHfeedback@uspto.gov.
4. ☐ Acknowledgment is made of a claim for foreign priority under 35 U.S.C. § 119(a)-(d) or (f).

   Certified copies:

   a) ☐ All b) ☐ Some *c) ☐ None of the:
   1. ☐ Certified copies of the priority documents have been received.
   2. ☐ Certified copies of the priority documents have been received in Application No. _____ .
   3. ☐ Copies of the certified copies of the priority documents have been received in this national stage application from the International Bureau (PCT Rule 17.2(a)).

   * Certified copies not received: _____.

Applicant has THREE MONTHS FROM THE "MAILING DATE" of this communication to file a reply complying with the requirements noted below. Failure to timely comply will result in ABANDONMENT of this application.
THIS THREE-MONTH PERIOD IS NOT EXTENDABLE.

5. ☐ CORRECTED DRAWINGS (as "replacement sheets") must be submitted.
   ☐ including changes required by the attached Examiner's Amendment / Comment or in the Office action of Paper No./Mail Date _____.

   Identifying indicia such as the application number (see 37 CFR 1.84(c)) should be written on the drawings in the front (not the back) of each sheet. Replacement sheet(s) should be labeled as such in the header according to 37 CFR 1.121(d).
6. ☐ DEPOSIT OF and/or INFORMATION about the deposit of BIOLOGICAL MATERIAL must be submitted. Note the attached Examiner's comment regarding REQUIREMENT FOR THE DEPOSIT OF BIOLOGICAL MATERIAL.

Attachment(s)

1. ☐ Notice of References Cited (PTO-892)
2. ☐ Information Disclosure Statements (PTO/SB/08), Paper No./Mail Date _____
3. ☐ Examiner's Comment Regarding Requirement for Deposit of Biological Material
4. ☐ Interview Summary (PTO-413), Paper No./Mail Date _____ .
5. ☐ Examiner's Amendment/Comment
6. ☐ Examiner's Statement of Reasons for Allowance
7. ☐ Other _____.

/GLORIA HALE/
Primary Examiner, Art Unit 3765

Nike, Inc. v. SherryWear, LLC et al. IPR2024-01128 SherryWear, LLC Exhibit 2066 Page 139

Issue Classification	Application/Control No.	Applicant(s)/Patent Under Reexamination
	15045592	GOFF, SHARON
	Examiner	**Art Unit**
	GLORIA HALE	3765

CPC

Symbol					Type	Version
A41C		3	/	0035	F	2013-01-01
A41C		3	/	122	I	2013-01-01
			/			
			/			
			/			
			/			
			/			
			/			
			/			
			/			
			/			
			/			
			/			
			/			
			/			

CPC Combination Sets

Symbol					Type	Set	Ranking	Version
			/					
			/					

NONE (Assistant Examiner)	(Date)	**Total Claims Allowed:** 17	
/GLORIA HALE/ Primary Examiner.Art Unit 3765 (Primary Examiner)	5-10-17 (Date)	O.G. Print Claim(s) 1	O.G. Print Figure 11

Issue Classification	Application/Control No.	Applicant(s)/Patent Under Reexamination
	15045592	GOFF, SHARON
	Examiner	**Art Unit**
	GLORIA HALE	3765

US ORIGINAL CLASSIFICATION		INTERNATIONAL CLASSIFICATION									
CLASS	SUBCLASS	CLAIMED					NON-CLAIMED				
		A	4	1	C	3 / 00 (2006.01.01)	A	4	1	C	3 / 00 (2006.01.01)
CROSS REFERENCE(S)											
CLASS	SUBCLASS (ONE SUBCLASS PER BLOCK)										

NONE (Assistant Examiner)	(Date)	**Total Claims Allowed:** 17	
/GLORIA HALE/ Primary Examiner.Art Unit 3765 (Primary Examiner)	5-10-17 (Date)	O.G. Print Claim(s) 1	O.G. Print Figure 11

Issue Classification	Application/Control No.	Applicant(s)/Patent Under Reexamination
	15045592	GOFF, SHARON
	Examiner	**Art Unit**
	GLORIA HALE	3765

☐ Claims renumbered in the same order as presented by applicant ☐ CPA ☐ T.D. ☐ R.1.47

Final	Original	Final	Original	Final	Original	Final	Original	Final	Original	Final	Original	Final	Original	Final	Original
1	1	14	17												
	2		18												
	3	15	19												
2	4	16	20												
	5	17	21												
3	6														
4	7														
5	8														
6	9														
7	10														
8	11														
9	12														
10	13														
11	14														
12	15														
13	16														

NONE (Assistant Examiner)	(Date)	**Total Claims Allowed:** 17	
/GLORIA HALE/ Primary Examiner.Art Unit 3765 (Primary Examiner)	5-10-17 (Date)	O.G. Print Claim(s) 1	O.G. Print Figure 11

Search Notes	Application/Control No.	Applicant(s)/Patent Under Reexamination
	15045592	GOFF, SHARON
	Examiner	**Art Unit**
	GLORIA HALE	3765

CPC- SEARCHED

Symbol	Date	Examiner
A41C 3/00,0021,0028,0035,148,10,005	3-6-16	gh
updated	2-9-17	gh
	5-10-17	gh

CPC COMBINATION SETS - SEARCHED

Symbol	Date	Examiner

US CLASSIFICATION SEARCHED

Class	Subclass	Date	Examiner
450	36,39,89,54-57	3-6-16	gh
	updsated	2-9-17	gh
		5-10-17	gh

SEARCH NOTES

Search Notes	Date	Examiner
inv name srch;ids flag clred; review related apps/pats for DP	3-6-16	gh

INTERFERENCE SEARCH

US Class/ CPC Symbol	US Subclass / CPC Group	Date	Examiner
east brs srtch hist		5-10-17	gh

	/GLORIA HALE/ Primary Examiner.Art Unit 3765

Nike, Inc. v. SherryWear, LLC et al. IPR2024-01128 SherryWear, LLC Exhibit 2066 Page 143

UNITED STATES PATENT AND TRADEMARK OFFICE

UNITED STATES DEPARTMENT OF COMMERCE
United States Patent and Trademark Office
Address: COMMISSIONER FOR PATENTS
P.O. Box 1450
Alexandria, Virginia 22313-1450
www.uspto.gov

BIB DATA SHEET

CONFIRMATION NO. 3326

SERIAL NUMBER	FILING or 371(c) DATE	CLASS	GROUP ART UNIT	ATTORNEY DOCKET NO.
15/045,592	02/17/2016 RULE	450	3765	16-029-SG

APPLICANTS

INVENTORS

Sharon Goff, Hilton Head, SC;

**** CONTINUING DATA ***************************

This application is a CON of 14/614,873 02/05/2015 PAT 9289016 *
which is a CIP of 14/082,777 11/18/2013 PAT 9295288
which is a CIP of 13/066,822 04/26/2011 PAT 8597072
and said 14/614,873 02/05/2015
claims benefit of 61/976,379 04/07/2014
(*)Data provided by applicant is not consistent with PTO records.

**** FOREIGN APPLICATIONS ***************************

**** IF REQUIRED, FOREIGN FILING LICENSE GRANTED **** ** SMALL ENTITY **
03/01/2016

Foreign Priority claimed	☐ Yes ☑ No	☐ Met after Allowance	STATE OR COUNTRY	SHEETS DRAWINGS	TOTAL CLAIMS	INDEPENDENT CLAIMS
35 USC 119(a-d) conditions met	☐ Yes ☑ No		SC	7	15	1
Verified and Acknowledged	/GLORIA M HALE/ Examiner's Signature	Initials				

ADDRESS

LAMBERT & ASSOCIATES
92 STATE STREET
BOSTON, MA 02109-2004
UNITED STATES

TITLE

POCKET BRA SYSTEM

FILING FEE RECEIVED		
730	FEES: Authority has been given in Paper No._____ to charge/credit DEPOSIT ACCOUNT No._____ for following:	☐ All Fees ☐ 1.16 Fees (Filing) ☐ 1.17 Fees (Processing Ext. of time) ☐ 1.18 Fees (Issue) ☐ Other _____ ☐ Credit

Index of Claims	Application/Control No.	Applicant(s)/Patent Under Reexamination
	15045592	GOFF, SHARON
	Examiner	**Art Unit**
	GLORIA HALE	3765

✓	Rejected	-	Cancelled	N	Non-Elected	A	Appeal
=	Allowed	÷	Restricted	I	Interference	O	Objected

☐ Claims renumbered in the same order as presented by applicant ☐ CPA ☐ T.D. ☐ R.1.47

CLAIM		DATE								
Final	Original	03/07/2016	02/13/2017	05/11/2017						
1	1	✓	✓	=						
	2	✓	-	-						
	3	✓	-	-						
2	4	✓	✓	=						
	5	✓	-	-						
3	6	✓	✓	=						
4	7	✓	✓	=						
5	8	✓	✓	=						
6	9	✓	✓	=						
7	10	✓	✓	=						
8	11	✓	✓	=						
9	12	✓	✓	=						
10	13	✓	✓	=						
11	14	✓	✓	=						
12	15	✓	✓	=						
13	16	✓	✓	=						
14	17	✓	✓	=						
	18	✓	✓	-						
15	19	✓	✓	=						
16	20			=						
17	21			=						

To: lambert@lambertpatentlaw.com,shortell@lambertpatentlaw.com,connaughton@lambertpatentlaw.com
From: PAIR_eOfficeAction@uspto.gov
Cc: PAIR_eOfficeAction@uspto.gov
Subject: Private PAIR Correspondence Notification for Customer Number 32118

May 23, 2017 03:53:24 AM

Dear PAIR Customer:

LAMBERT & ASSOCIATES
92 STATE STREET
BOSTON, MA 02109-2004
UNITED STATES

The following USPTO patent application(s) associated with your Customer Number, 32118 , have new outgoing correspondence. This correspondence is now available for viewing in Private PAIR.

The official date of notification of the outgoing correspondence will be indicated on the form PTOL-90 accompanying the correspondence.

Disclaimer:
The list of documents shown below is provided as a courtesy and is not part of the official file wrapper. The content of the images shown in PAIR is the official record.

Application	Document	Mailroom Date	Attorney Docket No.
15045592	NOA	05/23/2017	16-029-SG

To view your correspondence online or update your email addresses, please visit us anytime at https://sportal.uspto.gov/secure/myportal/privatepair.

If you have any questions, please email the Electronic Business Center (EBC) at EBC@uspto.gov with 'e-Office Action' on the subject line or call 1-866-217-9197 during the following hours:

Monday - Friday 6:00 a.m. to 12:00 a.m.

Thank you for prompt attention to this notice,

UNITED STATES PATENT AND TRADEMARK OFFICE

PATENT APPLICATION INFORMATION RETRIEVAL SYSTEM

PART B - FEE(S) TRANSMITTAL

Complete and send this form, together with applicable fee(s), to: Mail **Mail Stop ISSUE FEE**
Commissioner for Patents
P.O. Box 1450
Alexandria, Virginia 22313-1450
or Fax (571)-273-2885

INSTRUCTIONS: This form should be used for transmitting the ISSUE FEE and PUBLICATION FEE (if required). Blocks 1 through 5 should be completed where appropriate. All further correspondence including the Patent, advance orders and notification of maintenance fees will be mailed to the current correspondence address as indicated unless corrected below or directed otherwise in Block 1, by (a) specifying a new correspondence address; and/or (b) indicating a separate "FEE ADDRESS" for maintenance fee notifications.

CURRENT CORRESPONDENCE ADDRESS (Note: Use Block 1 for any change of address)

LAMBERT & ASSOCIATES
92 STATE STREET
BOSTON, MA 02109-2004

Note: A certificate of mailing can only be used for domestic mailings of the Fee(s) Transmittal. This certificate cannot be used for any other accompanying papers. Each additional paper, such as an assignment or formal drawing, must have its own certificate of mailing or transmission.

Certificate of Mailing or Transmission

I hereby certify that this Fee(s) Transmittal is being deposited with the United States Postal Service with sufficient postage for first class mail in an envelope addressed to the Mail Stop ISSUE FEE address above, or being facsimile transmitted to the USPTO (571) 273-2885, on the date indicated below.

(Depositor's name)
(Signature)
(Date)

APPLICATION NO.	FILING DATE	FIRST NAMED INVENTOR	ATTORNEY DOCKET NO.	CONFIRMATION NO.
15/045,592	02/17/2016	Sharon Goff	16-029-SG	3326

TITLE OF INVENTION:

APPLN. TYPE	SMALL ENTITY	ISSUE FEE DUE	PUBLICATION FEE DUE	PREV. PAID ISSUE FEE	TOTAL FEE(S) DUE	DATE DUE
nonprovisional	SMALL	$480	$0	$0	$480	08/23/2017

EXAMINER	ART UNIT	CLASS-SUBCLASS

1. Change of correspondence address or indication of "Fee Address" (37 CFR 1.363).
   - ☐ Change of correspondence address (or Change of Correspondence Address form PTO/SB/122) attached.
   - ☐ "Fee Address" indication (or "Fee Address" Indication form PTO/SB/47; Rev 03-02 or more recent) attached. **Use of a Customer Number is required.**

2. For printing on the patent front page, list
   (1) the names of up to 3 registered patent attorneys or agents OR, alternatively,
   (2) the name of a single firm (having as a member a registered attorney or agent) and the names of up to 2 registered patent attorneys or agents. If no name is listed, no name will be printed.

   1 Lambert & Associates
   2 Gary E. Lambert
   3 David J. Connaughton, Jr.

3. ASSIGNEE NAME AND RESIDENCE DATA TO BE PRINTED ON THE PATENT (print or type)

PLEASE NOTE: Unless an assignee is identified below, no assignee data will appear on the patent. If an assignee is identified below, the document has been filed for recordation as set forth in 37 CFR 3.11. Completion of this form is NOT a substitute for filing an assignment.

(A) NAME OF ASSIGNEE: Sherrywear LLC

(B) RESIDENCE: (CITY and STATE OR COUNTRY): Hilton Head Island, South Carolina

Please check the appropriate assignee category or categories (will not be printed on the patent) : ☐ Individual ☒ Corporation or other private group entity ☐ Government

4a. The following fee(s) are submitted:
- ☑ Issue Fee
- ☑ Publication Fee (No small entity discount permitted)
- ☐ Advance Order - # of Copies _____

4b. Payment of Fee(s): **(Please first reapply any previously paid issue fee shown above)**
- ☐ A check is enclosed.
- ☑ Payment by credit card. Form PTO-2038 is attached.
- ☐ The Director is hereby authorized to charge the required fee(s), any deficiency, or credit any overpayment, to Deposit Account Number _____ (enclose an extra copy of this form).

5. **Change in Entity Status** (from status indicated above)
- ☐ a. Applicant claims SMALL ENTITY status. See 37 CFR 1.27.
- ☐ b. Applicant is no longer claiming SMALL ENTITY status. See 37 CFR 1.27(g)(2).

NOTE: The Issue Fee and Publication Fee (if required) will not be accepted from anyone other than the applicant; a registered attorney or agent; or the assignee or other party in interest as shown by the records of the United States Patent and Trademark Office.

Authorized Signature /David J. Connaughton, Jr./ Date 07/06/2017

Typed or printed name David J. Connaughton, Jr. Registration No. 67275

This collection of information is required by 37 CFR 1.311. The information is required to obtain or retain a benefit by the public which is to file (and by the USPTO to process) an application. Confidentiality is governed by 35 U.S.C. 122 and 37 CFR 1.14. This collection is estimated to take 12 minutes to complete, including gathering, preparing, and submitting the completed application form to the USPTO. Time will vary depending upon the individual case. Any comments on the amount of time you require to complete this form and/or suggestions for reducing this burden, should be sent to the Chief Information Officer, U.S. Patent and Trademark Office, U.S. Department of Commerce, P.O. Box 1450, Alexandria, Virginia 22313-1450. DO NOT SEND FEES OR COMPLETED FORMS TO THIS ADDRESS. SEND TO: Commissioner for Patents, P.O. Box 1450, Alexandria, Virginia 22313-1450.

Under the Paperwork Reduction Act of 1995, no persons are required to respond to a collection of information unless it displays a valid OMB control number.

Privacy Act Statement

The Privacy Act of 1974 (P.L. 93-579) requires that you be given certain information in connection with your submission of the attached form related to a patent application or patent. Accordingly, pursuant to the requirements of the Act, please be advised that: (1) the general authority for the collection of this information is 35 U.S.C. 2(b)(2); (2) furnishing of the information solicited is voluntary; and (3) the principal purpose for which the information is used by the U.S. Patent and Trademark Office is to process and/or examine your submission related to a patent application or patent. If you do not furnish the requested information, the U.S. Patent and Trademark Office may not be able to process and/or examine your submission, which may result in termination of proceedings or abandonment of the application or expiration of the patent.

The information provided by you in this form will be subject to the following routine uses:

1. The information on this form will be treated confidentially to the extent allowed under the Freedom of Information Act (5 U.S.C. 552) and the Privacy Act (5 U.S.C 552a). Records from this system of records may be disclosed to the Department of Justice to determine whether disclosure of these records is required by the Freedom of Information Act.
2. A record from this system of records may be disclosed, as a routine use, in the course of presenting evidence to a court, magistrate, or administrative tribunal, including disclosures to opposing counsel in the course of settlement negotiations.
3. A record in this system of records may be disclosed, as a routine use, to a Member of Congress submitting a request involving an individual, to whom the record pertains, when the individual has requested assistance from the Member with respect to the subject matter of the record.
4. A record in this system of records may be disclosed, as a routine use, to a contractor of the Agency having need for the information in order to perform a contract. Recipients of information shall be required to comply with the requirements of the Privacy Act of 1974, as amended, pursuant to 5 U.S.C. 552a(m).
5. A record related to an International Application filed under the Patent Cooperation Treaty in this system of records may be disclosed, as a routine use, to the International Bureau of the World Intellectual Property Organization, pursuant to the Patent Cooperation Treaty.
6. A record in this system of records may be disclosed, as a routine use, to another federal agency for purposes of National Security review (35 U.S.C. 181) and for review pursuant to the Atomic Energy Act (42 U.S.C. 218(c)).
7. A record from this system of records may be disclosed, as a routine use, to the Administrator, General Services, or his/her designee, during an inspection of records conducted by GSA as part of that agency's responsibility to recommend improvements in records management practices and programs, under authority of 44 U.S.C. 2904 and 2906. Such disclosure shall be made in accordance with the GSA regulations governing inspection of records for this purpose, and any other relevant (i.e., GSA or Commerce) directive. Such disclosure shall not be used to make determinations about individuals.
8. A record from this system of records may be disclosed, as a routine use, to the public after either publication of the application pursuant to 35 U.S.C. 122(b) or issuance of a patent pursuant to 35 U.S.C. 151. Further, a record may be disclosed, subject to the limitations of 37 CFR 1.14, as a routine use, to the public if the record was filed in an application which became abandoned or in which the proceedings were terminated and which application is referenced by either a published application, an application open to public inspection or an issued patent.
9. A record from this system of records may be disclosed, as a routine use, to a Federal, State, or local law enforcement agency, if the USPTO becomes aware of a violation or potential violation of law or regulation.

Electronic Patent Application Fee Transmittal

Application Number:	15045592
Filing Date:	17-Feb-2016
Title of Invention:	POCKET BRA SYSTEM
First Named Inventor/Applicant Name:	Sharon Goff
Filer:	Gary Ervery Lambert
Attorney Docket Number:	16-029-SG

Filed as Small Entity

Filing Fees for Utility under 35 USC 111(a)

Description	Fee Code	Quantity	Amount	Sub-Total in USD($)
Basic Filing:				
Pages:				
Claims:				
Miscellaneous-Filing:				
Petition:				
Patent-Appeals-and-Interference:				
Post-Allowance-and-Post-Issuance:				
UTILITY APPL ISSUE FEE	2501	1	480	480

Description	Fee Code	Quantity	Amount	Sub-Total in USD($)
Extension-of-Time:				
Miscellaneous:				
			Total in USD ($)	**480**

Electronic Acknowledgement Receipt

EFS ID:	29700089
Application Number:	15045592
International Application Number:	
Confirmation Number:	3326
Title of Invention:	POCKET BRA SYSTEM
First Named Inventor/Applicant Name:	Sharon Goff
Customer Number:	32118
Filer:	Gary Ervery Lambert
Filer Authorized By:	
Attorney Docket Number:	16-029-SG
Receipt Date:	06-JUL-2017
Filing Date:	17-FEB-2016
Time Stamp:	11:49:02
Application Type:	Utility under 35 USC 111(a)

Payment information:

Submitted with Payment	yes
Payment Type	CARD
Payment was successfully received in RAM	$480
RAM confirmation Number	070617INTEFSW11494300
Deposit Account	
Authorized User	

The Director of the USPTO is hereby authorized to charge indicated fees and credit any overpayment as follows:

File Listing:

Document Number	Document Description	File Name	File Size(Bytes)/ Message Digest	Multi Part /.zip	Pages (if appl.)
1	Issue Fee Payment (PTO-85B)	Issue_Fee_Transmittal_Form-16-029-SG.pdf	74841 37dec9725bec0e779f8adc14d4a66789e04b3caf	no	2
Warnings:					
Information:					
2	Fee Worksheet (SB06)	fee-info.pdf	30198 993a63ded9727358a9bf23027d02836b2822b6e2	no	2
Warnings:					
Information:					
		Total Files Size (in bytes):	105039		

This Acknowledgement Receipt evidences receipt on the noted date by the USPTO of the indicated documents, characterized by the applicant, and including page counts, where applicable. It serves as evidence of receipt similar to a Post Card, as described in MPEP 503.

New Applications Under 35 U.S.C. 111
If a new application is being filed and the application includes the necessary components for a filing date (see 37 CFR 1.53(b)-(d) and MPEP 506), a Filing Receipt (37 CFR 1.54) will be issued in due course and the date shown on this Acknowledgement Receipt will establish the filing date of the application.
National Stage of an International Application under 35 U.S.C. 371
If a timely submission to enter the national stage of an international application is compliant with the conditions of 35 U.S.C. 371 and other applicable requirements a Form PCT/DO/EO/903 indicating acceptance of the application as a national stage submission under 35 U.S.C. 371 will be issued in addition to the Filing Receipt, in due course.
New International Application Filed with the USPTO as a Receiving Office
If a new international application is being filed and the international application includes the necessary components for an international filing date (see PCT Article 11 and MPEP 1810), a Notification of the International Application Number and of the International Filing Date (Form PCT/RO/105) will be issued in due course, subject to prescriptions concerning national security, and the date shown on this Acknowledgement Receipt will establish the international filing date of the application.

UNITED STATES PATENT AND TRADEMARK OFFICE

UNITED STATES DEPARTMENT OF COMMERCE
United States Patent and Trademark Office
Address: COMMISSIONER FOR PATENTS
P.O. Box 1450
Alexandria, Virginia 22313-1450
www.uspto.gov

APPLICATION NO.	ISSUE DATE	PATENT NO.	ATTORNEY DOCKET NO.	CONFIRMATION NO.
15/045,592	08/08/2017	9723878	16-029-SG	3326

32118 7590 07/19/2017
LAMBERT & ASSOCIATES
92 STATE STREET
BOSTON, MA 02109-2004

ISSUE NOTIFICATION

The projected patent number and issue date are specified above.

Determination of Patent Term Adjustment under 35 U.S.C. 154 (b)
(application filed on or after May 29, 2000)

The Patent Term Adjustment is 0 day(s). Any patent to issue from the above-identified application will include an indication of the adjustment on the front page.

If a Continued Prosecution Application (CPA) was filed in the above-identified application, the filing date that determines Patent Term Adjustment is the filing date of the most recent CPA.

Applicant will be able to obtain more detailed information by accessing the Patent Application Information Retrieval (PAIR) WEB site (http://pair.uspto.gov).

Any questions regarding the Patent Term Extension or Adjustment determination should be directed to the Office of Patent Legal Administration at (571)-272-7702. Questions relating to issue and publication fee payments should be directed to the Application Assistance Unit (AAU) of the Office of Data Management (ODM) at (571)-272-4200.

APPLICANT(s) (Please see PAIR WEB site http://pair.uspto.gov for additional applicants):

Sharon Goff, Hilton Head, SC;

The United States represents the largest, most dynamic marketplace in the world and is an unparalleled location for business investment, innovation, and commercialization of new technologies. The USA offers tremendous resources and advantages for those who invest and manufacture goods here. Through SelectUSA, our nation works to encourage and facilitate business investment. To learn more about why the USA is the best country in the world to develop technology, manufacture products, and grow your business, visit SelectUSA.gov.

To: lambert@lambertpatentlaw.com,shortell@lambertpatentlaw.com,connaughton@lambertpatentlaw.com
From: PAIR_eOfficeAction@uspto.gov
Cc: PAIR_eOfficeAction@uspto.gov
Subject: Private PAIR Correspondence Notification for Customer Number 32118

Jul 20, 2017 04:13:19 AM

Dear PAIR Customer:

LAMBERT & ASSOCIATES
92 STATE STREET
BOSTON, MA 02109-2004
UNITED STATES

The following USPTO patent application(s) associated with your Customer Number, 32118 , have new outgoing correspondence. This correspondence is now available for viewing in Private PAIR.

The official date of notification of the outgoing correspondence will be indicated on the form PTOL-90 accompanying the correspondence.

Disclaimer:
The list of documents shown below is provided as a courtesy and is not part of the official file wrapper. The content of the images shown in PAIR is the official record.

Application	Document	Mailroom Date	Attorney Docket No.
15045592	ISSUE.NTF	07/19/2017	16-029-SG

To view your correspondence online or update your email addresses, please visit us anytime at https://sportal.uspto.gov/secure/myportal/privatepair.

If you have any questions, please email the Electronic Business Center (EBC) at EBC@uspto.gov with 'e-Office Action' on the subject line or call 1-866-217-9197 during the following hours:

Monday - Friday 6:00 a.m. to 12:00 a.m.

Thank you for prompt attention to this notice,

UNITED STATES PATENT AND TRADEMARK OFFICE

PATENT APPLICATION INFORMATION RETRIEVAL SYSTEM

Doc Code: PA..
Document Description: Power of Attorney

PTO/AIA/82A (07-13)
Approved for use through 11/30/2014. OMB 0651-0051
U.S. Patent and Trademark Office; U.S. DEPARTMENT OF COMMERCE
Under the Paperwork Reduction Act of 1995, no persons are required to respond to a collection of information unless it displays a valid OMB control number.

TRANSMITTAL FOR POWER OF ATTORNEY TO ONE OR MORE REGISTERED PRACTITIONERS

NOTE: This form is to be submitted with the Power of Attorney by Applicant form (PTO/AIA/82B) to identify the application to which the Power of Attorney is directed, in accordance with 37 CFR 1.5, unless the application number and filing date are identified in the Power of Attorney by Applicant form. If neither form PTO/AIA/82A nor form PTO/AIA82B identifies the application to which the Power of Attorney is directed, the Power of Attorney will not be recognized in the application.

Application Number	15/045,592
Filing Date	
First Named Inventor	Sharon Goff
Title	POCKET BRA SYSTEM
Art Unit	
Examiner Name	
Attorney Docket Number	104913

SIGNATURE of Applicant or Patent Practitioner

Signature	/Dale J. Ream/	Date (Optional)	
Name	Dale J. Ream	Registration Number	45798
Title (if Applicant is a juristic entity)			
Applicant Name (if Applicant is a juristic entity)			

NOTE: This form must be signed in accordance with 37 CFR 1.33. See 37 CFR 1.4(d) for signature requirements and certifications. If more than one applicant, use multiple forms.

☐ *Total of _____ forms are submitted.

This collection of information is required by 37 CFR 1.131, 1.32, and 1.33. The information is required to obtain or retain a benefit by the public which is to file (and by the USPTO to process) an application. Confidentiality is governed by 35 U.S.C. 122 and 37 CFR 1.11 and 1.14. This collection is estimated to take 3 minutes to complete, including gathering, preparing, and submitting the completed application form to the USPTO. Time will vary depending upon the individual case. Any comments on the amount of time you require to complete this form and/or suggestions for reducing this burden, should be sent to the Chief Information Officer, U.S. Patent and Trademark Office, U.S. Department of Commerce, P.O. Box 1450, Alexandria, VA 22313-1450. DO NOT SEND FEES OR COMPLETED FORMS TO THIS ADDRESS. **SEND TO: Commissioner for Patents, P.O. Box 1450, Alexandria, VA 22313-1450.**

If you need assistance in completing the form, call 1-800-PTO-9199 and select option 2.

Doc Code: PA..
Document Description: Power of Attorney

PTO/AIA/82B (07-13)
Approved for use through 11/30/2014. OMB 0651-0031
U.S. Patent and Trademark Office; U.S. DEPARTMENT OF COMMERCE
Under the Paperwork Reduction Act of 1995, no persons are required to respond to a collection of information unless it displays a valid OMB control number

POWER OF ATTORNEY BY APPLICANT

I hereby revoke all previous powers of attorney given in the application identified in either the attached transmittal letter or the boxes below.

Application Number	Filing Date

(Note: The boxes above may be left blank if information is provided on form PTO/AIA/82A.)

☑ I hereby appoint the Patent Practitioner(s) associated with the following Customer Number as my/our attorney(s) or agent(s), and to transact all business in the United States Patent and Trademark Office connected therewith for the application referenced in the attached transmittal letter (form PTO/AIA/82A) or identified above: 24230

OR

☐ I hereby appoint Practitioner(s) named in the attached list (form PTO/AIA/82C) as my/our attorney(s) or agent(s), and to transact all business in the United States Patent and Trademark Office connected therewith for the patent application referenced in the attached transmittal letter (form PTO/AIA/82A) or identified above. (Note: Complete form PTO/AIA/82C.)

Please recognize or change the correspondence address for the application identified in the attached transmittal letter or the boxes above to:

☑ The address associated with the above-mentioned Customer Number

OR

☐ The address associated with Customer Number:

OR

Firm or Individual Name					
Address					
City		State		Zip	
Country					
Telephone		Email			

I am the Applicant (if the Applicant is a juristic entity, list the Applicant name in the box):

Sherrywear LLC

☑ Inventor or Joint Inventor (title not required below)

☐ Legal Representative of a Deceased or Legally Incapacitated Inventor (title not required below)

☐ Assignee or Person to Whom the Inventor is Under an Obligation to Assign (provide signer's title if applicant is a juristic entity)

☐ Person Who Otherwise Shows Sufficient Proprietary Interest (e.g., a petition under 37 CFR 1.46(b)(2) was granted in the application or is concurrently being filed with this document) (provide signer's title if applicant is a juristic entity)

SIGNATURE of Applicant for Patent

The undersigned (whose title is supplied below) is authorized to act on behalf of the applicant (e.g., where the applicant is a juristic entity).

Signature	Sharon Goff	Date (Optional)	3/3/2020
Name	Sharon Goff		
Title			

NOTE: Signature - This form must be signed by the applicant in accordance with 37 CFR 1.33. See 37 CFR 1.4 for signature requirements and certifications. If more than one applicant, use multiple forms.

☐ Total of forms are submitted.

This collection of information is required by 37 CFR 1.131, 1.32, and 1.33. The information is required to obtain or retain a benefit by the public which is to file (and by the USPTO to process) an application. Confidentiality is governed by 35 U.S.C. 122 and 37 CFR 1.11 and 1.14. This collection is estimated to take 3 minutes to complete, including gathering, preparing, and submitting the completed application form to the USPTO. Time will vary depending upon the individual case. Any comments on the amount of time you require to complete this form and/or suggestions for reducing this burden, should be sent to the Chief Information Officer, U.S. Patent and Trademark Office, U.S. Department of Commerce, P.O. Box 1450, Alexandria, VA 22313-1450. DO NOT SEND FEES OR COMPLETED FORMS TO THIS ADDRESS. **SEND TO: Commissioner for Patents, P.O. Box 1450, Alexandria, VA 22313-1450.**

If you need assistance in completing the form, call 1-800-PTO-9199 and select option 2.

Scanned with CamScanner

Electronic Acknowledgement Receipt

EFS ID:	39356456
Application Number:	15045592
International Application Number:	
Confirmation Number:	3326
Title of Invention:	POCKET BRA SYSTEM
First Named Inventor/Applicant Name:	Sharon Goff
Customer Number:	32118
Filer:	Dale Ream/Michelle Randol
Filer Authorized By:	Dale Ream
Attorney Docket Number:	16-029-SG
Receipt Date:	05-MAY-2020
Filing Date:	17-FEB-2016
Time Stamp:	15:39:25
Application Type:	Utility under 35 USC 111(a)

Payment information:

Submitted with Payment	no

File Listing:

Document Number	Document Description	File Name	File Size(Bytes)/ Message Digest	Multi Part /.zip	Pages (if appl.)
1	Power of Attorney	POA_20200505135141.pdf	546652 e6e16f90ac0e0394aa5d11cd99fc5c654890af2f	no	2

Warnings:

Information:	
Total Files Size (in bytes):	546652

This Acknowledgement Receipt evidences receipt on the noted date by the USPTO of the indicated documents, characterized by the applicant, and including page counts, where applicable. It serves as evidence of receipt similar to a Post Card, as described in MPEP 503.

New Applications Under 35 U.S.C. 111
If a new application is being filed and the application includes the necessary components for a filing date (see 37 CFR 1.53(b)-(d) and MPEP 506), a Filing Receipt (37 CFR 1.54) will be issued in due course and the date shown on this Acknowledgement Receipt will establish the filing date of the application.
National Stage of an International Application under 35 U.S.C. 371
If a timely submission to enter the national stage of an international application is compliant with the conditions of 35 U.S.C. 371 and other applicable requirements a Form PCT/DO/EO/903 indicating acceptance of the application as a national stage submission under 35 U.S.C. 371 will be issued in addition to the Filing Receipt, in due course.
New International Application Filed with the USPTO as a Receiving Office
If a new international application is being filed and the international application includes the necessary components for an international filing date (see PCT Article 11 and MPEP 1810), a Notification of the International Application Number and of the International Filing Date (Form PCT/RO/105) will be issued in due course, subject to prescriptions concerning national security, and the date shown on this Acknowledgement Receipt will establish the international filing date of the application.

UNITED STATES PATENT AND TRADEMARK OFFICE

UNITED STATES DEPARTMENT OF COMMERCE
United States Patent and Trademark Office
Address: COMMISSIONER FOR PATENTS
P.O. Box 1450
Alexandria, Virginia 22313-1450
www.uspto.gov

APPLICATION NUMBER	FILING OR 371(C) DATE	FIRST NAMED APPLICANT	ATTY. DOCKET NO./TITLE
15/045,592	02/17/2016	Sharon Goff	16-029-SG

CONFIRMATION NO. 3326

POWER OF ATTORNEY NOTICE

32118
LAMBERT SHORTELL & CONNAUGHTON
92 STATE STREET
BOSTON, MA 02109-2004

OC000000116810178

Date Mailed: 05/07/2020

NOTICE REGARDING CHANGE OF POWER OF ATTORNEY

This is in response to the Power of Attorney filed 05/05/2020.

- The Power of Attorney to you in this application has been revoked by the assignee who has intervened as provided by 37 CFR 3.71. Future correspondence will be mailed to the new address of record(37 CFR 1.33).

Questions about the contents of this notice and the requirements it sets forth should be directed to the Office of Data Management, Application Assistance Unit, at **(571) 272-4000** or **(571) 272-4200** or **1-888-786-0101**.

/ggasgedom/

Nike, Inc. v. SherryWear, LLC et al. IPR2024-01128 SherryWear, LLC Exhibit 2066 Page 159

UNITED STATES PATENT AND TRADEMARK OFFICE

UNITED STATES DEPARTMENT OF COMMERCE
United States Patent and Trademark Office
Address: COMMISSIONER FOR PATENTS
P.O. Box 1450
Alexandria, Virginia 22313-1450
www.uspto.gov

APPLICATION NUMBER	FILING OR 371(C) DATE	FIRST NAMED APPLICANT	ATTY. DOCKET NO./TITLE
15/045,592	02/17/2016	Sharon Goff	104913

CONFIRMATION NO. 3326

POA ACCEPTANCE LETTER

24230
Ream Law Firm, L.L.C.
210 W. TECUMSEH STREET
OTTAWA, KS 66067

OC000000116810226

Date Mailed: 05/07/2020

NOTICE OF ACCEPTANCE OF POWER OF ATTORNEY

This is in response to the Power of Attorney filed 05/05/2020.

The Power of Attorney in this application is accepted. Correspondence in this application will be mailed to the above address as provided by 37 CFR 1.33.

Questions about the contents of this notice and the requirements it sets forth should be directed to the Office of Data Management, Application Assistance Unit, at **(571) 272-4000** or **(571) 272-4200** or **1-888-786-0101**.

/ggasgedom/

Doc Code: PA..
Document Description: Power of Attorney

PTO/AIA/82A (07-12)
Approved for use through 11/30/2014. OMB 0651-0035
U.S. Patent and Trademark Office; U.S. DEPARTMENT OF COMMERCE
Under the Paperwork Reduction Act of 1995, no persons are required to respond to a collection of information unless it displays a valid OMB control number.

TRANSMITTAL FOR POWER OF ATTORNEY TO ONE OR MORE REGISTERED PRACTITIONERS

NOTE: This form is to be submitted with the Power of Attorney by Applicant form (PTO/AIA/82B or equivalent) to identify the application to which the Power of Attorney is directed, in accordance with 37 CFR 1.5. If the Power of Attorney by Applicant form is not accompanied by this transmittal form or an equivalent, the Power of Attorney will not be recognized in the application.

Application Number	
Filing Date	
First Named Inventor	Sharon Goff
Title	POCKET BRA SYSTEM
Art Unit	
Examiner Name	
Attorney Docket Number	16-029-SG

SIGNATURE of Applicant or Patent Practitioner

Signature	/David J. Connaughton, Jr./	Date	
Name	David J. Connaughton, Jr.	Telephone	
Registration Number	67275		

NOTE: This form must be signed in accordance with 37 CFR 1.33. See 37 CFR 1.4(d) for signature requirements and certifications.

☐ *Total of 1 forms are submitted.

This collection of information is required by 37 CFR 1.31, 1.32 and 1.33. The information is required to obtain or retain a benefit by the public which is to file (and by the USPTO to process) an application. Confidentiality is governed by 35 U.S.C. 122 and 37 CFR 1.11 and 1.14. This collection is estimated to take 3 minutes to complete, including gathering, preparing, and submitting the completed application form to the USPTO. Time will vary depending upon the individual case. Any comments on the amount of time you require to complete this form and/or suggestions for reducing this burden, should be sent to the Chief Information Officer, U.S. Patent and Trademark Office, U.S. Department of Commerce, P.O. Box 1450, Alexandria, VA 22313-1450. DO NOT SEND FEES OR COMPLETED FORMS TO THIS ADDRESS. **SEND TO: Commissioner for Patents, P.O. Box 1450, Alexandria, VA 22313-1450.**

If you need assistance in completing the form, call 1-800-PTO-9199 and select option 2.

Doc Code: PA..
Document Description: Power of Attorney

PTO/AIA/82B(07-12)
Approved for use through 11/30/2014. OMB 0651-0035
U.S. Patent and Trademark Office; U.S. DEPARTMENT OF COMMERCE
Under the Paperwork Reduction Act of 1995, no persons are required to respond to a collection of information unless it displays a valid OMB control number.

POWER OF ATTORNEY BY APPLICANT

I hereby revoke all previous powers of attorney given in the application identified in the attached transmittal letter.

[x] I hereby appoint Practitioner(s) associated with the following Customer Number as my/our attorney(s) or agent(s), and to transact all business in the United States Patent and Trademark Office connected therewith for the application referenced in the attached transmittal letter (form PTO/AIA/82A or equivalent): 32118

OR

[ ] I hereby appoint Practitioner(s) named below as my/our attorney(s) or agent(s), and to transact all business in the United States Patent and Trademark Office connected therewith for the application referenced in the attached transmittal letter (form PTO/AIA/82A or equivalent):

Name	Registration Number	Name	Registration Number

Please recognize or change the correspondence address for the application identified in the attached transmittal letter to:

[x] The address associated with the above-mentioned Customer Number.

OR

[ ] The address associated with Customer Number:

OR

[ ] Firm or Individual Name					
Address					
City		State		Zip	
Country					
Telephone		Email			

I am the Applicant:

[x] Inventor or Joint Inventor

[ ] Legal Representative of a Deceased or Legally Incapacitated Inventor

[ ] Assignee or Person to Whom the Inventor is Under an Obligation to Assign

[ ] Person Who Otherwise Shows Sufficient Proprietary Interest (*e.g.,* a petition under 37 CFR 1.46(b)(2) was granted in the application or is concurrently being filed with this document)

SIGNATURE of Applicant for Patent

Signature	/Sharon Goff/	Date	2/4/16
Name	Sharon Goff	Telephone	
Title and Company			

NOTE: Signature - This form must be signed by the applicant in accordance with 37 CFR 1.33. See 37 CFR 1.4 for signature requirements and certifications. Submit multiple forms for more than one signature, see below *.

[ ] *Total of 1 forms are submitted.

This collection of information is required by 37 CFR 1.31, 1.32 and 1.33. The information is required to obtain or retain a benefit by the public which is to file (and by the USPTO to process) an application. Confidentiality is governed by 35 U.S.C. 122 and 37 CFR 1.11 and 1.14. This collection is estimated to take 3 minutes to complete, including gathering, preparing, and submitting the completed application form to the USPTO. Time will vary depending upon the individual case. Any comments on the amount of time you require to complete this form and/or suggestions for reducing this burden, should be sent to the Chief Information Officer, U.S. Patent and Trademark Office, U.S. Department of Commerce, P.O. Box 1450, Alexandria, VA 22313-1450. DO NOT SEND FEES OR COMPLETED FORMS TO THIS ADDRESS. **SEND TO: Commissioner for Patents, P.O. Box 1450, Alexandria, VA 22313-1450.**

If you need assistance in completing the form, call 1-800-PTO-9199 and select option 2.

Privacy Act Statement

The **Privacy Act of 1974 (P.L. 93-579)** requires that you be given certain information in connection with your submission of the attached form related to a patent application or patent. Accordingly, pursuant to the requirements of the Act, please be advised that: (1) the general authority for the collection of this information is 35 U.S.C. 2(b)(2); (2) furnishing of the information solicited is voluntary; and (3) the principal purpose for which the information is used by the U.S. Patent and Trademark Office is to process and/or examine your submission related to a patent application or patent. If you do not furnish the requested information, the U.S. Patent and Trademark Office may not be able to process and/or examine your submission, which may result in termination of proceedings or abandonment of the application or expiration of the patent.

The information provided by you in this form will be subject to the following routine uses:

1. The information on this form will be treated confidentially to the extent allowed under the Freedom of Information Act (5 U.S.C. 552) and the Privacy Act (5 U.S.C 552a). Records from this system of records may be disclosed to the Department of Justice to determine whether disclosure of these records is required by the Freedom of Information Act.
2. A record from this system of records may be disclosed, as a routine use, in the course of presenting evidence to a court, magistrate, or administrative tribunal, including disclosures to opposing counsel in the course of settlement negotiations.
3. A record in this system of records may be disclosed, as a routine use, to a Member of Congress submitting a request involving an individual, to whom the record pertains, when the individual has requested assistance from the Member with respect to the subject matter of the record.
4. A record in this system of records may be disclosed, as a routine use, to a contractor of the Agency having need for the information in order to perform a contract. Recipients of information shall be required to comply with the requirements of the Privacy Act of 1974, as amended, pursuant to 5 U.S.C. 552a(m).
5. A record related to an International Application filed under the Patent Cooperation Treaty in this system of records may be disclosed, as a routine use, to the International Bureau of the World Intellectual Property Organization, pursuant to the Patent Cooperation Treaty.
6. A record in this system of records may be disclosed, as a routine use, to another federal agency for purposes of National Security review (35 U.S.C. 181) and for review pursuant to the Atomic Energy Act (42 U.S.C. 218(c)).
7. A record from this system of records may be disclosed, as a routine use, to the Administrator, General Services, or his/her designee, during an inspection of records conducted by GSA as part of that agency's responsibility to recommend improvements in records management practices and programs, under authority of 44 U.S.C. 2904 and 2906. Such disclosure shall be made in accordance with the GSA regulations governing inspection of records for this purpose, and any other relevant (*i.e.*, GSA or Commerce) directive. Such disclosure shall not be used to make determinations about individuals.
8. A record from this system of records may be disclosed, as a routine use, to the public after either publication of the application pursuant to 35 U.S.C. 122(b) or issuance of a patent pursuant to 35 U.S.C. 151. Further, a record may be disclosed, subject to the limitations of 37 CFR 1.14, as a routine use, to the public if the record was filed in an application which became abandoned or in which the proceedings were terminated and which application is referenced by either a published application, an application open to public inspection or an issued patent.
9. A record from this system of records may be disclosed, as a routine use, to a Federal, State, or local law enforcement agency, if the USPTO becomes aware of a violation or potential violation of law or regulation.

Electronic Acknowledgement Receipt

EFS ID:	42323313
Application Number:	15045592
International Application Number:	
Confirmation Number:	3326
Title of Invention:	POCKET BRA SYSTEM
First Named Inventor/Applicant Name:	Sharon Goff
Customer Number:	24230
Filer:	Gary Ervery Lambert/James Keeley
Filer Authorized By:	Gary Ervery Lambert
Attorney Docket Number:	104913
Receipt Date:	30-MAR-2021
Filing Date:	17-FEB-2016
Time Stamp:	16:06:29
Application Type:	Utility under 35 USC 111(a)

Payment information:

Submitted with Payment	no

File Listing:

Document Number	Document Description	File Name	File Size(Bytes)/ Message Digest	Multi Part /.zip	Pages (if appl.)
1	Power of Attorney	POA.pdf	197357 7c26d0c3ed6fc193d148af6a42c201214554 63fc	no	3

Warnings:

Information:	
Total Files Size (in bytes):	197357

This Acknowledgement Receipt evidences receipt on the noted date by the USPTO of the indicated documents, characterized by the applicant, and including page counts, where applicable. It serves as evidence of receipt similar to a Post Card, as described in MPEP 503.

New Applications Under 35 U.S.C. 111
If a new application is being filed and the application includes the necessary components for a filing date (see 37 CFR 1.53(b)-(d) and MPEP 506), a Filing Receipt (37 CFR 1.54) will be issued in due course and the date shown on this Acknowledgement Receipt will establish the filing date of the application.
National Stage of an International Application under 35 U.S.C. 371
If a timely submission to enter the national stage of an international application is compliant with the conditions of 35 U.S.C. 371 and other applicable requirements a Form PCT/DO/EO/903 indicating acceptance of the application as a national stage submission under 35 U.S.C. 371 will be issued in addition to the Filing Receipt, in due course.
New International Application Filed with the USPTO as a Receiving Office
If a new international application is being filed and the international application includes the necessary components for an international filing date (see PCT Article 11 and MPEP 1810), a Notification of the International Application Number and of the International Filing Date (Form PCT/RO/105) will be issued in due course, subject to prescriptions concerning national security, and the date shown on this Acknowledgement Receipt will establish the international filing date of the application.

UNITED STATES PATENT AND TRADEMARK OFFICE

UNITED STATES DEPARTMENT OF COMMERCE
United States Patent and Trademark Office
Address: COMMISSIONER FOR PATENTS
P.O. Box 1450
Alexandria, Virginia 22313-1450
www.uspto.gov

APPLICATION NUMBER	FILING OR 371(C) DATE	FIRST NAMED APPLICANT	ATTY. DOCKET NO./TITLE
15/045,592	02/17/2016	Sharon Goff	104913

CONFIRMATION NO. 3326

POWER OF ATTORNEY NOTICE

24230
Ream Law Firm, L.L.C.
210 W. TECUMSEH STREET
OTTAWA, KS 66067

OC000000124645875

Date Mailed: 04/07/2021

NOTICE REGARDING CHANGE OF POWER OF ATTORNEY

This is in response to the Power of Attorney filed 03/30/2021.

- The Power of Attorney to you in this application has been revoked by the applicant. Future correspondence will be mailed to the new address of record(37 CFR 1.33).

Questions about the contents of this notice and the requirements it sets forth should be directed to the Office of Data Management, Application Assistance Unit, at **(571) 272-4000** or **(571) 272-4200** or **1-888-786-0101**.

/snguyen/

UNITED STATES PATENT AND TRADEMARK OFFICE

UNITED STATES DEPARTMENT OF COMMERCE
United States Patent and Trademark Office
Address: COMMISSIONER FOR PATENTS
P.O. Box 1450
Alexandria, Virginia 22313-1450
www.uspto.gov

APPLICATION NUMBER	FILING OR 371(C) DATE	FIRST NAMED APPLICANT	ATTY. DOCKET NO./TITLE
15/045,592	02/17/2016	Sharon Goff	16-029-SG

CONFIRMATION NO. 3326

POA ACCEPTANCE LETTER

32118
LAMBERT SHORTELL & CONNAUGHTON
100 Franklin Street
Suite 903
BOSTON, MA 02110

OC000000124645930

Date Mailed: 04/07/2021

NOTICE OF ACCEPTANCE OF POWER OF ATTORNEY

This is in response to the Power of Attorney filed 03/30/2021.

The Power of Attorney in this application is accepted. Correspondence in this application will be mailed to the above address as provided by 37 CFR 1.33.

Questions about the contents of this notice and the requirements it sets forth should be directed to the Office of Data Management, Application Assistance Unit, at **(571) 272-4000** or **(571) 272-4200** or **1-888-786-0101**.

/snguyen/

To: info@lambertpatentlaw.com,,
From: PAIR_eOfficeAction@uspto.gov
Cc: PAIR_eOfficeAction@uspto.gov
Subject: Private PAIR Correspondence Notification for Customer Number 32118

Apr 07, 2021 03:51:43 AM

Dear PAIR Customer:

LAMBERT SHORTELL & CONNAUGHTON
100 Franklin Street
Suite 903
BOSTON, MA 02110
UNITED STATES

The following USPTO patent application(s) associated with your Customer Number, 32118 , have new outgoing correspondence. This correspondence is now available for viewing in Private PAIR.

The official date of notification of the outgoing correspondence will be indicated on the form PTOL-90 accompanying the correspondence.

Disclaimer:
The list of documents shown below is provided as a courtesy and is not part of the official file wrapper. The content of the images shown in PAIR is the official record.

Application	Document	Mailroom Date	Attorney Docket No.
15045592	N570	04/07/2021	16-029-SG
	N570	04/07/2021	16-029-SG

To view your correspondence online or update your email addresses, please visit us anytime at https://sportal.uspto.gov/secure/myportal/privatepair.

If you have any questions, please email the Electronic Business Center (EBC) at EBC@uspto.gov with 'e-Office Action' on the subject line or call 1-866-217-9197 during the following hours:

Monday - Friday 6:00 a.m. to 12:00 a.m.

Thank you for prompt attention to this notice,

UNITED STATES PATENT AND TRADEMARK OFFICE

PATENT APPLICATION INFORMATION RETRIEVAL SYSTEM

PATENT ASSIGNMENT COVER SHEET

Electronic Version v1.1
Stylesheet Version v1.2

EPAS ID: PAT7268532

SUBMISSION TYPE:	NEW ASSIGNMENT
NATURE OF CONVEYANCE:	CHANGE OF ADDRESS

CONVEYING PARTY DATA

Name	Execution Date
SHERRYWEAR, LLC	04/07/2022

RECEIVING PARTY DATA

Name:	SHERRYWEAR, LLC
Street Address:	1786 CYPRESS LANE
City:	VERO BEACH
State/Country:	FLORIDA
Postal Code:	32963

PROPERTY NUMBERS Total: 9

Property Type	Number
Patent Number:	9289016
Patent Number:	9295288
Patent Number:	9723878
Patent Number:	9808036
Patent Number:	10219550
Patent Number:	10219551
Patent Number:	10244800
Patent Number:	10869510
Patent Number:	11051561

CORRESPONDENCE DATA

Fax Number:

Correspondence will be sent to the e-mail address first; if that is unsuccessful, it will be sent using a fax number, if provided; if that is unsuccessful, it will be sent via US Mail.

Email: info@lambertpatentlaw.com
Correspondent Name: DAVID CONNAUGHTON
Address Line 1: 100 FRANKLIN STREET
Address Line 2: SUITE 903
Address Line 4: BOSTON, MASSACHUSETTS 02110

NAME OF SUBMITTER:	DAVID CONNAUGHTON
SIGNATURE:	/DAVID CONNAUGHTON/

DATE SIGNED:	04/07/2022
	This document serves as an Oath/Declaration (37 CFR 1.63).

Total Attachments: 9
source=Change of address 9289016#page1.tif
source=Change of address 9295288#page1.tif
source=Change of address 9723878#page1.tif
source=Change of address 9808036#page1.tif
source=Change of address 10219550#page1.tif
source=Change of address 10219551#page1.tif
source=Change of address 10244800#page1.tif
source=Change of address 10869510#page1.tif
source=Change of address 11051561#page1.tif

UNITED STATES PATENT AND TRADEMARK OFFICE

Patent No.:	9289016
Assignee:	SHERRYWEAR, LLC
Invention title:	Pocket bra system
Reel/frame:	036929/0101

Lambert Shortell & Connaughton
100 Franklin Street, Suite 903
Boston, MA 02110

Commissioner for Patents
P.O. Box 1450
Alexandria, VA 22313-1450

CHANGE OF ADDRESS

This is a request that the address of the Assignee of the above-identified patent be updated. The Assignee is no longer located at 24 Wood Duck Court, Hilton Head Island, SC 29928. The Assignee is now located at 1786 Cypress Lane, Vero Beach, FL 32963. Accordingly, the assignment of the above-identified patent should be updated to reflect the change of address. The Assignment Division is invited to contact the undersigned, Applicant's attorney of record, to facilitate advancement of the present request.

Respectfully submitted,

/David J. Connaughton, Jr./
David J. Connaughton, Jr.
USPTO Reg. #67275
100 Franklin Street, Suite 903
Boston, MA 02110
(617) 720-0091

UNITED STATES PATENT AND TRADEMARK OFFICE

Patent No.:	9295288
Assignee:	SHERRYWEAR, LLC
Invention title:	Pocket bra system
Reel/frame:	036929/0101

Lambert Shortell & Connaughton
100 Franklin Street, Suite 903
Boston, MA 02110

Commissioner for Patents
P.O. Box 1450
Alexandria, VA 22313-1450

CHANGE OF ADDRESS

This is a request that the address of the Assignee of the above-identified patent be updated. The Assignee is no longer located at 24 Wood Duck Court, Hilton Head Island, SC 29928. The Assignee is now located at 1786 Cypress Lane, Vero Beach, FL 32963. Accordingly, the assignment of the above-identified patent should be updated to reflect the change of address. The Assignment Division is invited to contact the undersigned, Applicant's attorney of record, to facilitate advancement of the present request.

Respectfully submitted,

/David J. Connaughton, Jr./
David J. Connaughton, Jr.
USPTO Reg. #67275
100 Franklin Street, Suite 903
Boston, MA 02110
(617) 720-0091

UNITED STATES PATENT AND TRADEMARK OFFICE

Patent No.:	9723878
Assignee:	SHERRYWEAR, LLC
Invention title:	Pocket bra system
Reel/frame:	037763/0204

Lambert Shortell & Connaughton
100 Franklin Street, Suite 903
Boston, MA 02110

Commissioner for Patents
P.O. Box 1450
Alexandria, VA 22313-1450

CHANGE OF ADDRESS

This is a request that the address of the Assignee of the above-identified patent be updated. The Assignee is no longer located at 24 Wood Duck Court, Hilton Head Island, SC 29928. The Assignee is now located at 1786 Cypress Lane, Vero Beach, FL 32963. Accordingly, the assignment of the above-identified patent should be updated to reflect the change of address. The Assignment Division is invited to contact the undersigned, Applicant's attorney of record, to facilitate advancement of the present request.

Respectfully submitted,

/David J. Connaughton, Jr./
David J. Connaughton, Jr.
USPTO Reg. #67275
100 Franklin Street, Suite 903
Boston, MA 02110
(617) 720-0091

UNITED STATES PATENT AND TRADEMARK OFFICE

Patent No.:	9808036
Assignee:	SHERRYWEAR, LLC
Invention title:	Pocket bra system
Reel/frame:	037763/0204

Lambert Shortell & Connaughton
100 Franklin Street, Suite 903
Boston, MA 02110

Commissioner for Patents
P.O. Box 1450
Alexandria, VA 22313-1450

CHANGE OF ADDRESS

This is a request that the address of the Assignee of the above-identified patent be updated. The Assignee is no longer located at 24 Wood Duck Court, Hilton Head Island, SC 29928. The Assignee is now located at 1786 Cypress Lane, Vero Beach, FL 32963. Accordingly, the assignment of the above-identified patent should be updated to reflect the change of address. The Assignment Division is invited to contact the undersigned, Applicant's attorney of record, to facilitate advancement of the present request.

Respectfully submitted,

/David J. Connaughton, Jr./
David J. Connaughton, Jr.
USPTO Reg. #67275
100 Franklin Street, Suite 903
Boston, MA 02110
(617) 720-0091

UNITED STATES PATENT AND TRADEMARK OFFICE

Patent No.:	10219550
Assignee:	SHERRYWEAR, LLC
Invention title:	Pocket bra system
Reel/frame:	044338/0675

Lambert Shortell & Connaughton
100 Franklin Street, Suite 903
Boston, MA 02110

Commissioner for Patents
P.O. Box 1450
Alexandria, VA 22313-1450

CHANGE OF ADDRESS

This is a request that the address of the Assignee of the above-identified patent be updated. The Assignee is no longer located at 24 Wood Duck Court, Hilton Head Island, SC 29928. The Assignee is now located at 1786 Cypress Lane, Vero Beach, FL 32963. Accordingly, the assignment of the above-identified patent should be updated to reflect the change of address. The Assignment Division is invited to contact the undersigned, Applicant's attorney of record, to facilitate advancement of the present request.

Respectfully submitted,

/David J. Connaughton, Jr./
David J. Connaughton, Jr.
USPTO Reg. #67275
100 Franklin Street, Suite 903
Boston, MA 02110
(617) 720-0091

UNITED STATES PATENT AND TRADEMARK OFFICE

Patent No.:	10219551
Assignee:	SHERRYWEAR, LLC
Invention title:	Bra pocket system
Reel/frame:	044338/0675

Lambert Shortell & Connaughton
100 Franklin Street, Suite 903
Boston, MA 02110

Commissioner for Patents
P.O. Box 1450
Alexandria, VA 22313-1450

CHANGE OF ADDRESS

This is a request that the address of the Assignee of the above-identified patent be updated. The Assignee is no longer located at 24 Wood Duck Court, Hilton Head Island, SC 29928. The Assignee is now located at 1786 Cypress Lane, Vero Beach, FL 32963. Accordingly, the assignment of the above-identified patent should be updated to reflect the change of address. The Assignment Division is invited to contact the undersigned, Applicant's attorney of record, to facilitate advancement of the present request.

Respectfully submitted,

/David J. Connaughton, Jr./
David J. Connaughton, Jr.
USPTO Reg. #67275
100 Franklin Street, Suite 903
Boston, MA 02110
(617) 720-0091

UNITED STATES PATENT AND TRADEMARK OFFICE

Patent No.:	10244800
Assignee:	SHERRYWEAR, LLC
Invention title:	Bra pocket system
Reel/frame:	052634/0266

Lambert Shortell & Connaughton
100 Franklin Street, Suite 903
Boston, MA 02110

Commissioner for Patents
P.O. Box 1450
Alexandria, VA 22313-1450

CHANGE OF ADDRESS

This is a request that the address of the Assignee of the above-identified patent be updated. The Assignee is no longer located at 24 Wood Duck Court, Hilton Head Island, SC 29928. The Assignee is now located at 1786 Cypress Lane, Vero Beach, FL 32963. Accordingly, the assignment of the above-identified patent should be updated to reflect the change of address. The Assignment Division is invited to contact the undersigned, Applicant's attorney of record, to facilitate advancement of the present request.

Respectfully submitted,

/David J. Connaughton, Jr./
David J. Connaughton, Jr.
USPTO Reg. #67275
100 Franklin Street, Suite 903
Boston, MA 02110
(617) 720-0091

UNITED STATES PATENT AND TRADEMARK OFFICE

Patent No.:	10869510
Assignee:	SHERRYWEAR, LLC
Invention title:	Bra pocket system
Reel/frame:	048162/0864

Lambert Shortell & Connaughton
100 Franklin Street, Suite 903
Boston, MA 02110

Commissioner for Patents
P.O. Box 1450
Alexandria, VA 22313-1450

CHANGE OF ADDRESS

This is a request that the address of the Assignee of the above-identified patent be updated. The Assignee is no longer located at 24 Wood Duck Court, Hilton Head Island, SC 29928. The Assignee is now located at 1786 Cypress Lane, Vero Beach, FL 32963. Accordingly, the assignment of the above-identified patent should be updated to reflect the change of address. The Assignment Division is invited to contact the undersigned, Applicant's attorney of record, to facilitate advancement of the present request.

Respectfully submitted,

/David J. Connaughton, Jr./
David J. Connaughton, Jr.
USPTO Reg. #67275
100 Franklin Street, Suite 903
Boston, MA 02110
(617) 720-0091

UNITED STATES PATENT AND TRADEMARK OFFICE

Patent No.:	11051561
Assignee:	SHERRYWEAR, LLC
Invention title:	Pocket bra system
Reel/frame:	048162/0864

Lambert Shortell & Connaughton
100 Franklin Street, Suite 903
Boston, MA 02110

Commissioner for Patents
P.O. Box 1450
Alexandria, VA 22313-1450

CHANGE OF ADDRESS

This is a request that the address of the Assignee of the above-identified patent be updated. The Assignee is no longer located at 24 Wood Duck Court, Hilton Head Island, SC 29928. The Assignee is now located at 1786 Cypress Lane, Vero Beach, FL 32963. Accordingly, the assignment of the above-identified patent should be updated to reflect the change of address. The Assignment Division is invited to contact the undersigned, Applicant's attorney of record, to facilitate advancement of the present request.

Respectfully submitted,

/David J. Connaughton, Jr./
David J. Connaughton, Jr.
USPTO Reg. #67275
100 Franklin Street, Suite 903
Boston, MA 02110
(617) 720-0091

DocuSign Envelope ID: DDCAD40B-EF9A-4E58-89C3-C2807AEDBF08

Document Description: Power of Attorney

PTO/AIA/82A (07-13)
Approved for use through 01/31/2018. OMB 0651-0035
U.S. Patent and Trademark Office; U.S. DEPARTMENT OF COMMERCE
Under the Paperwork Reduction Act of 1995, no persons are required to respond to a collection of information unless it displays a valid OMB control number.

TRANSMITTAL FOR POWER OF ATTORNEY TO ONE OR MORE REGISTERED PRACTITIONERS

NOTE: This form is to be submitted with the Power of Attorney by Applicant form (PTO/AIA/82B) to identify the application to which the Power of Attorney is directed, in accordance with 37 CFR 1.5, unless the application number and filing date are identified in the Power of Attorney by Applicant form. If neither form PTO/AIA/82A nor form PTO/AIA82B identifies the application to which the Power of Attorney is directed, the Power of Attorney will not be recognized in the application.

Application Number	15/045,592
Filing Date	02-17-2016
First Named Inventor	Sharon Goff
Title	POCKET BRA SYSTEM
Art Unit	3765
Examiner Name	GLORIA M HALE
Attorney Docket Number	16-029-SG

SIGNATURE of Applicant or Patent Practitioner

Signature	/KATHERINE A RUBINO/	Date (Optional)	
Name	Katherine A Rubino	Registration Number	76990
Title (if Applicant is a juristic entity)			
Applicant Name (if Applicant is a juristic entity)			

NOTE: This form must be signed in accordance with 37 CFR 1.33. See 37 CFR 1.4(d) for signature requirements and certifications. If more than one applicant, use multiple forms.

☐ *Total of _____ forms are submitted.

This collection of information is required by 37 CFR 1.131, 1.32, and 1.33. The information is required to obtain or retain a benefit by the public which is to file (and by the USPTO to process) an application. Confidentiality is governed by 35 U.S.C. 122 and 37 CFR 1.11 and 1.14. This collection is estimated to take 3 minutes to complete, including gathering, preparing, and submitting the completed application form to the USPTO. Time will vary depending upon the individual case. Any comments on the amount of time you require to complete this form and/or suggestions for reducing this burden, should be sent to the Chief Information Officer, U.S. Patent and Trademark Office, U.S. Department of Commerce, P.O. Box 1450, Alexandria, VA 22313-1450. DO NOT SEND FEES OR COMPLETED FORMS TO THIS ADDRESS. **SEND TO: Commissioner for Patents, P.O. Box 1450, Alexandria, VA 22313-1450.**

If you need assistance in completing the form, call 1-800-PTO-9199 and select option 2.

DocuSign Envelope ID: DDCAD40B-EF9A-4E58-89C3-C2807AEDBF08

Document Description: Power of Attorney

PTO/AIA/82B (07-13)
Approved for use through 01/31/2018. OMB 0651-0035
U.S. Patent and Trademark Office; U.S. DEPARTMENT OF COMMERCE
Under the Paperwork Reduction Act of 1995, no persons are required to respond to a collection of information unless it displays a valid OMB control number

POWER OF ATTORNEY BY APPLICANT

I hereby revoke all previous powers of attorney given in the application identified in either the attached transmittal letter or the boxes below.

Application Number	Filing Date
15/045,592	02-17-2016

(Note: The boxes above may be left blank if information is provided on form PTO/AIA/82A.)

☑ I hereby appoint the Patent Practitioner(s) associated with the following Customer Number as my/our attorney(s) or agent(s), and to transact all business in the United States Patent and Trademark Office connected therewith for the application referenced in the attached transmittal letter (form PTO/AIA/82A) or identified above: 145340

OR

☐ I hereby appoint Practitioner(s) named in the attached list (form PTO/AIA/82C) as my/our attorney(s) or agent(s), and to transact all business in the United States Patent and Trademark Office connected therewith for the patent application referenced in the attached transmittal letter (form PTO/AIA/82A) or identified above. (Note: Complete form PTO/AIA/82C.)

Please recognize or change the correspondence address for the application identified in the attached transmittal letter or the boxes above to:

☑ The address associated with the above-mentioned Customer Number

OR

☐ The address associated with Customer Number:

OR

☐ Firm or Individual Name					
Address					
City		State		Zip	
Country					
Telephone		Email			

I am the Applicant (if the Applicant is a juristic entity, list the Applicant name in the box):

SherryWear, LLC

☐ Inventor or Joint Inventor (title not required below)

☐ Legal Representative of a Deceased or Legally Incapacitated Inventor (title not required below)

☐ Assignee or Person to Whom the Inventor is Under an Obligation to Assign (provide signer's title if applicant is a juristic entity)

☐ Person Who Otherwise Shows Sufficient Proprietary Interest (e.g., a petition under 37 CFR 1.46(b)(2) was granted in the application or is concurrently being filed with this document) (provide signer's title if applicant is a juristic entity)

SIGNATURE of Applicant for Patent

The undersigned (whose title is supplied below) is authorized to act on behalf of the applicant (e.g., where the applicant is a juristic entity).

Signature	Sharon Goff DD39FABABF0A492...	Date (Optional)	
Name	Sharon Goff		
Title	Manager		

NOTE: Signature - This form must be signed by the applicant in accordance with 37 CFR 1.33. See 37 CFR 1.4 for signature requirements and certifications. If more than one applicant, use multiple forms.

☐ Total of forms are submitted.

This collection of information is required by 37 CFR 1.131, 1.32, and 1.33. The information is required to obtain or retain a benefit by the public which is to file (and by the USPTO to process) an application. Confidentiality is governed by 35 U.S.C. 122 and 37 CFR 1.11 and 1.14. This collection is estimated to take 3 minutes to complete, including gathering, preparing, and submitting the completed application form to the USPTO. Time will vary depending upon the individual case. Any comments on the amount of time you require to complete this form and/or suggestions for reducing this burden, should be sent to the Chief Information Officer, U.S. Patent and Trademark Office, U.S. Department of Commerce, P.O. Box 1450, Alexandria, VA 22313-1450. DO NOT SEND FEES OR COMPLETED FORMS TO THIS ADDRESS. **SEND TO: Commissioner for Patents, P.O. Box 1450, Alexandria, VA 22313-1450.**
If you need assistance in completing the form, call 800-786-9199 and select option 1.

DocuSign Envelope ID: DDCAD40B-EF9A-4E58-89C3-C2807AEDBF08

PTO/AIA/82C (07-13)
Approved for use through 01/31/2018. OMB 0651-0035
U.S. Patent and Trademark Office; U.S. DEPARTMENT OF COMMERCE
Under the Paperwork Reduction Act of 1995, no persons are required to respond to a collection of information unless it displays a valid OMB control number

POWER OF ATTORNEY BY APPLICANT

No more than ten (10) patent practitioners total may be appointed as set forth below by name and registration number. This page need not be submitted if appointing the Patent Practitioner(s) associated with a Customer Number (see form PTO/AIA/82B):

Name	Registration Number

DocuSign Envelope ID: DDCAD40B-EF9A-4E58-89C3-C2807AEDBF08

Privacy Act Statement

The **Privacy Act of 1974 (P.L. 93-579)** requires that you be given certain information in connection with your submission of the attached form related to a patent application or patent. Accordingly, pursuant to the requirements of the Act, please be advised that: (1) the general authority for the collection of this information is 35 U.S.C. 2(b)(2); (2) furnishing of the information solicited is voluntary; and (3) the principal purpose for which the information is used by the U.S. Patent and Trademark Office is to process and/or examine your submission related to a patent application or patent. If you do not furnish the requested information, the U.S. Patent and Trademark Office may not be able to process and/or examine your submission, which may result in termination of proceedings or abandonment of the application or expiration of the patent.

The information provided by you in this form will be subject to the following routine uses:

1. The information on this form will be treated confidentially to the extent allowed under the Freedom of Information Act (5 U.S.C. 552) and the Privacy Act (5 U.S.C. 552a). Records from this system of records may be disclosed to the Department of Justice to determine whether the Freedom of Information Act requires disclosure of these records.
2. A record from this system of records may be disclosed, as a routine use, in the course of presenting evidence to a court, magistrate, or administrative tribunal, including disclosures to opposing counsel in the course of settlement negotiations.
3. A record in this system of records may be disclosed, as a routine use, to a Member of Congress submitting a request involving an individual, to whom the record pertains, when the individual has requested assistance from the Member with respect to the subject matter of the record.
4. A record in this system of records may be disclosed, as a routine use, to a contractor of the Agency having need for the information in order to perform a contract. Recipients of information shall be required to comply with the requirements of the Privacy Act of 1974, as amended, pursuant to 5 U.S.C. 552a(m).
5. A record related to an International Application filed under the Patent Cooperation Treaty in this system of records may be disclosed, as a routine use, to the International Bureau of the World Intellectual Property Organization, pursuant to the Patent Cooperation Treaty.
6. A record in this system of records may be disclosed, as a routine use, to another federal agency for purposes of National Security review (35 U.S.C. 181) and for review pursuant to the Atomic Energy Act (42 U.S.C. 218(c)).
7. A record from this system of records may be disclosed, as a routine use, to the Administrator, General Services, or his/her designee, during an inspection of records conducted by GSA as part of that agency's responsibility to recommend improvements in records management practices and programs, under authority of 44 U.S.C. 2904 and 2906. Such disclosure shall be made in accordance with the GSA regulations governing inspection of records for this purpose, and any other relevant (i.e., GSA or Commerce) directive. Such disclosure shall not be used to make determinations about individuals.
8. A record from this system of records may be disclosed, as a routine use, to the public after either publication of the application pursuant to 35 U.S.C. 122(b) or issuance of a patent pursuant to 35 U.S.C. 151. Further, a record may be disclosed, subject to the limitations of 37 CFR 1.14, as a routine use, to the public if the record was filed in an application which became abandoned or in which the proceedings were terminated and which application is referenced by either a published application, an application open to public inspections or an issued patent.
9. A record from this system of records may be disclosed, as a routine use, to a Federal, State, or local law enforcement agency, if the USPTO becomes aware of a violation or potential violation of law or regulation.

Electronic Acknowledgement Receipt

EFS ID:	46064065
Application Number:	15045592
International Application Number:	
Confirmation Number:	3326
Title of Invention:	POCKET BRA SYSTEM
First Named Inventor/Applicant Name:	Sharon Goff
Customer Number:	32118
Filer:	Keegan M. Caldwell/Rachel Riley
Filer Authorized By:	Keegan M. Caldwell
Attorney Docket Number:	16-029-SG
Receipt Date:	28-JUN-2022
Filing Date:	17-FEB-2016
Time Stamp:	14:09:43
Application Type:	Utility under 35 USC 111(a)

Payment information:

Submitted with Payment	no

File Listing:

Document Number	Document Description	File Name	File Size(Bytes)/ Message Digest	Multi Part /.zip	Pages (if appl.)
1	Power of Attorney	15045592_POA.pdf	244739 0fd4d9f6df83b28221179a1d69b5df37fb12d9ce	no	4

Warnings:

Information:	
Total Files Size (in bytes):	244739

This Acknowledgement Receipt evidences receipt on the noted date by the USPTO of the indicated documents, characterized by the applicant, and including page counts, where applicable. It serves as evidence of receipt similar to a Post Card, as described in MPEP 503.

New Applications Under 35 U.S.C. 111
If a new application is being filed and the application includes the necessary components for a filing date (see 37 CFR 1.53(b)-(d) and MPEP 506), a Filing Receipt (37 CFR 1.54) will be issued in due course and the date shown on this Acknowledgement Receipt will establish the filing date of the application.
National Stage of an International Application under 35 U.S.C. 371
If a timely submission to enter the national stage of an international application is compliant with the conditions of 35 U.S.C. 371 and other applicable requirements a Form PCT/DO/EO/903 indicating acceptance of the application as a national stage submission under 35 U.S.C. 371 will be issued in addition to the Filing Receipt, in due course.
New International Application Filed with the USPTO as a Receiving Office
If a new international application is being filed and the international application includes the necessary components for an international filing date (see PCT Article 11 and MPEP 1810), a Notification of the International Application Number and of the International Filing Date (Form PCT/RO/105) will be issued in due course, subject to prescriptions concerning national security, and the date shown on this Acknowledgement Receipt will establish the international filing date of the application.

UNITED STATES PATENT AND TRADEMARK OFFICE

UNITED STATES DEPARTMENT OF COMMERCE
United States Patent and Trademark Office
Address: COMMISSIONER FOR PATENTS
P.O. Box 1450
Alexandria, Virginia 22313-1450
www.uspto.gov

APPLICATION NUMBER	FILING OR 371(C) DATE	FIRST NAMED APPLICANT	ATTY. DOCKET NO./TITLE
15/045,592	02/17/2016	Sharon Goff	16-029-SG

CONFIRMATION NO. 3326

POWER OF ATTORNEY NOTICE

32118
LAMBERT SHORTELL & CONNAUGHTON
100 Franklin Street
Suite 903
BOSTON, MA 02110

OC000000135120121

Date Mailed: 07/14/2022

NOTICE REGARDING CHANGE OF POWER OF ATTORNEY

This is in response to the Power of Attorney filed 06/28/2022.

- The Power of Attorney to you in this application has been revoked by the applicant. Future correspondence will be mailed to the new address of record(37 CFR 1.33).

Questions about the contents of this notice and the requirements it sets forth should be directed to the Office of Data Management, Application Assistance Unit, at **(571) 272-4000** or **(571) 272-4200** or **1-888-786-0101**.

/hteffera/

Nike, Inc. v. SherryWear, LLC et al. IPR2024-01128 SherryWear, LLC Exhibit 2066 Page 186

UNITED STATES PATENT AND TRADEMARK OFFICE

UNITED STATES DEPARTMENT OF COMMERCE
United States Patent and Trademark Office
Address: COMMISSIONER FOR PATENTS
P.O. Box 1450
Alexandria, Virginia 22313-1450
www.uspto.gov

APPLICATION NUMBER	FILING OR 371(C) DATE	FIRST NAMED APPLICANT	ATTY. DOCKET NO./TITLE
15/045,592	02/17/2016	Sharon Goff	16-029-SG

CONFIRMATION NO. 3326

POA ACCEPTANCE LETTER

145340
Caldwell Intellectual Property Law
200 Clarendon Street
59th Floor
Boston, MA 02116

OC000000135120150

Date Mailed: 07/14/2022

NOTICE OF ACCEPTANCE OF POWER OF ATTORNEY

This is in response to the Power of Attorney filed 06/28/2022.

The Power of Attorney in this application is accepted. Correspondence in this application will be mailed to the above address as provided by 37 CFR 1.33.

Questions about the contents of this notice and the requirements it sets forth should be directed to the Office of Data Management, Application Assistance Unit, at **(571) 272-4000** or **(571) 272-4200** or **1-888-786-0101**.

/hteffera/

To: alexander@caldwellip.com,rachel@caldwellip.com,docketing@caldwellip.com
From: PAIR_eOfficeAction@uspto.gov
Cc: PAIR_eOfficeAction@uspto.gov
Subject: Private PAIR Correspondence Notification for Customer Number 145340

Jul 14, 2022 04:52:53 AM

Dear PAIR Customer:

Caldwell Intellectual Property Law
200 Clarendon Street
59th Floor
Boston, MA 02116
UNITED STATES

The following USPTO patent application(s) associated with your Customer Number, 145340 , have new outgoing correspondence. This correspondence is now available for viewing in Private PAIR.

The official date of notification of the outgoing correspondence will be indicated on the form PTOL-90 accompanying the correspondence.

Disclaimer:
The list of documents shown below is provided as a courtesy and is not part of the official file wrapper. The content of the images shown in PAIR is the official record.

Application	Document	Mailroom Date	Attorney Docket No.
15045592	N570	07/14/2022	16-029-SG
	N570	07/14/2022	16-029-SG

To view your correspondence online or update your email addresses, please visit us anytime at https://sportal.uspto.gov/secure/myportal/privatepair.

If you have any questions, please email the Electronic Business Center (EBC) at EBC@uspto.gov with 'e-Office Action' on the subject line or call 1-866-217-9197 during the following hours:

Monday - Friday 6:00 a.m. to 12:00 a.m.

Thank you for prompt attention to this notice,

UNITED STATES PATENT AND TRADEMARK OFFICE

PATENT APPLICATION INFORMATION RETRIEVAL SYSTEM