US007218041B2

(12) **United States Patent**
Isoda

(10) **Patent No.: US 7,218,041 B2**
(45) **Date of Patent: May 15, 2007**

(54) **LIGHT EMITTING DEVICE PROVIDED WITH ELECTRICALLY CONDUCTIVE MEMBERS HAVING HIGH THERMAL CONDUCTIVITY FOR THERMAL RADIATION**

(75) Inventor: **Hiroto Isoda**, Yamanashi-ken (JP)

(73) Assignee: **Citizen Electronics Co., Ltd.**, Yamanashi-Ken (JP)

(*) Notice: Subject to any disclaimer, the term of this patent is extended or adjusted under 35 U.S.C. 154(b) by 200 days.

(21) Appl. No.: **10/700,494**

(22) Filed: **Nov. 5, 2003**

(65) **Prior Publication Data**

US 2004/0095782 A1 May 20, 2004

(30) **Foreign Application Priority Data**

Nov. 15, 2002 (JP) 2002-332877

(51) **Int. Cl.**

H01J 61/52	(2006.01)
H01J 63/04	(2006.01)
H01J 1/62	(2006.01)
F21V 29/00	(2006.01)

(52) **U.S. Cl.** **313/11**; 313/512; 313/506; 362/373; 362/555

(58) **Field of Classification Search** 313/512; 362/294

See application file for complete search history.

(56) **References Cited**

U.S. PATENT DOCUMENTS

6,045,240	A *	4/2000	Hochstein	362/294
6,121,995	A *	9/2000	Kattner	372/35
6,517,218	B2 *	2/2003	Hochstein	362/294
6,590,773	B1 *	7/2003	Lin	362/373
6,964,501	B2 *	11/2005	Ryan	362/373
6,999,318	B2 *	2/2006	Newby	362/373
2001/0030866	A1 *	10/2001	Hochstein	362/294

* cited by examiner

Primary Examiner—Sikha Roy
Assistant Examiner—Natalie K. Walford
(74) *Attorney, Agent, or Firm*—Dennison, Schultz & MacDonald

(57) **ABSTRACT**

A light emitting device has a plurality of conductive members with good heat conductivity provided in a base member, the conductive members are isolated by insulating members provided between the conductive members. A light emitting element device is mounted on the base member. An light emitting diode is provided in the light emitting device and mounted on conductive member. A projection is outwardly projected from the heat conductive member for cooling the LED.

15 Claims, 10 Drawing Sheets

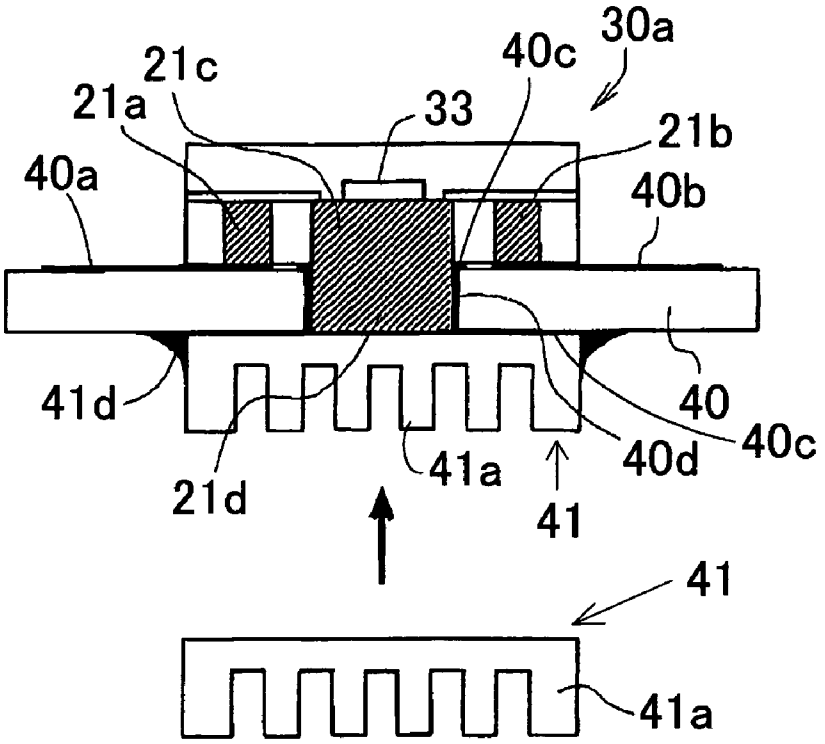

FIG. 1

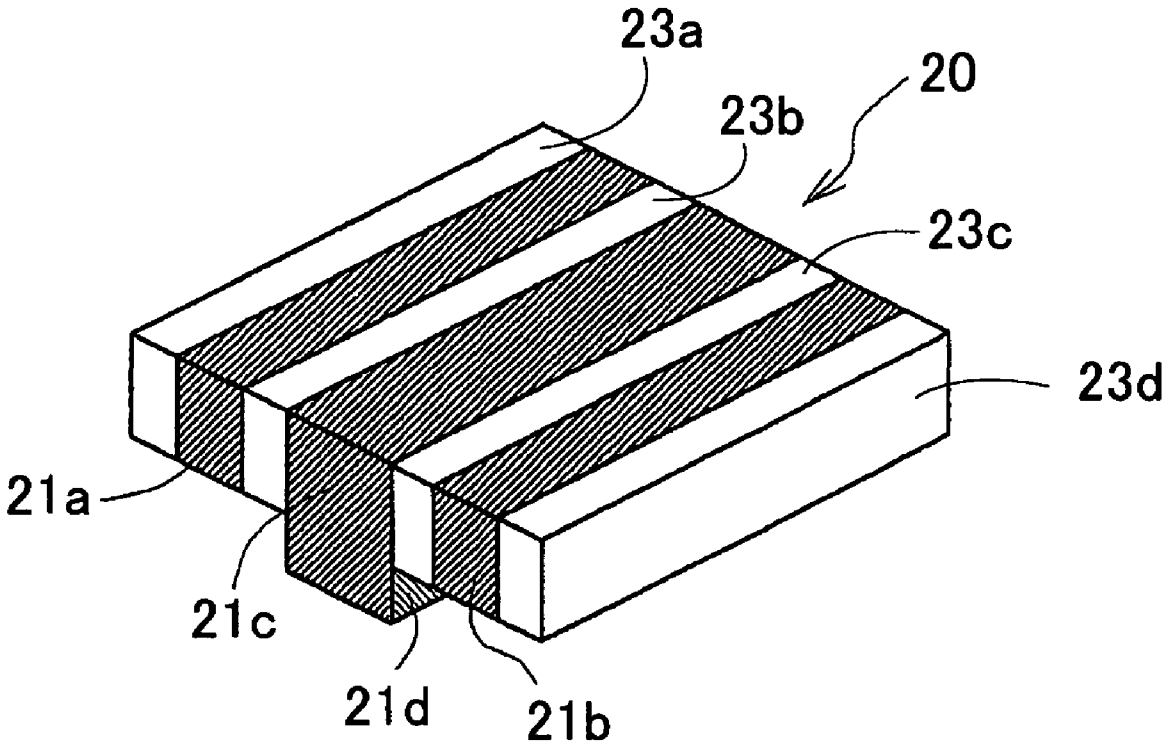

FIG. 2

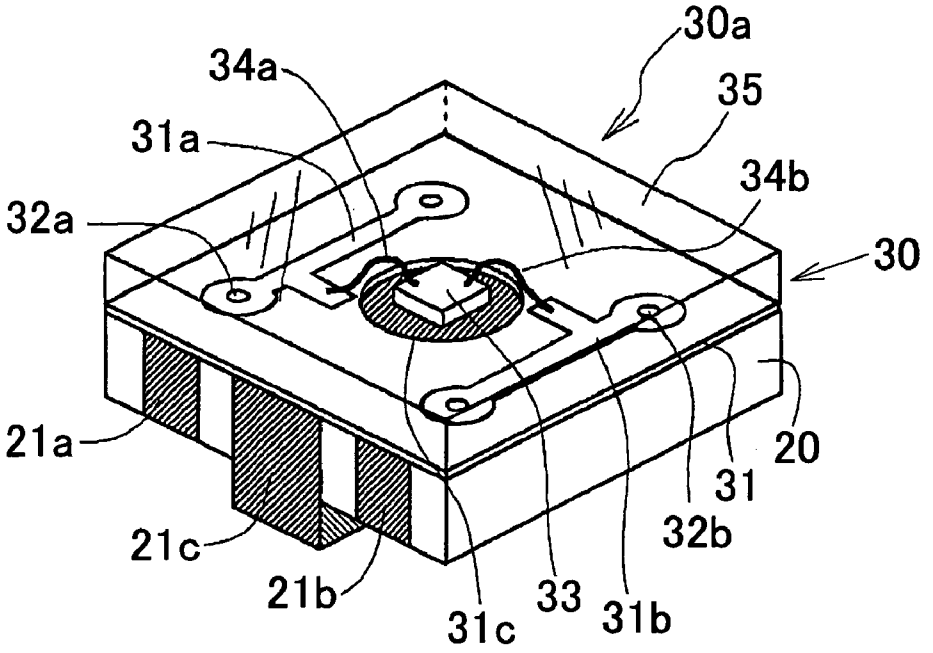
30a
34a
35
31a
34b
32a
30
21a
20
31
32b
21c
21b
31c
33
31b

FIG. 3

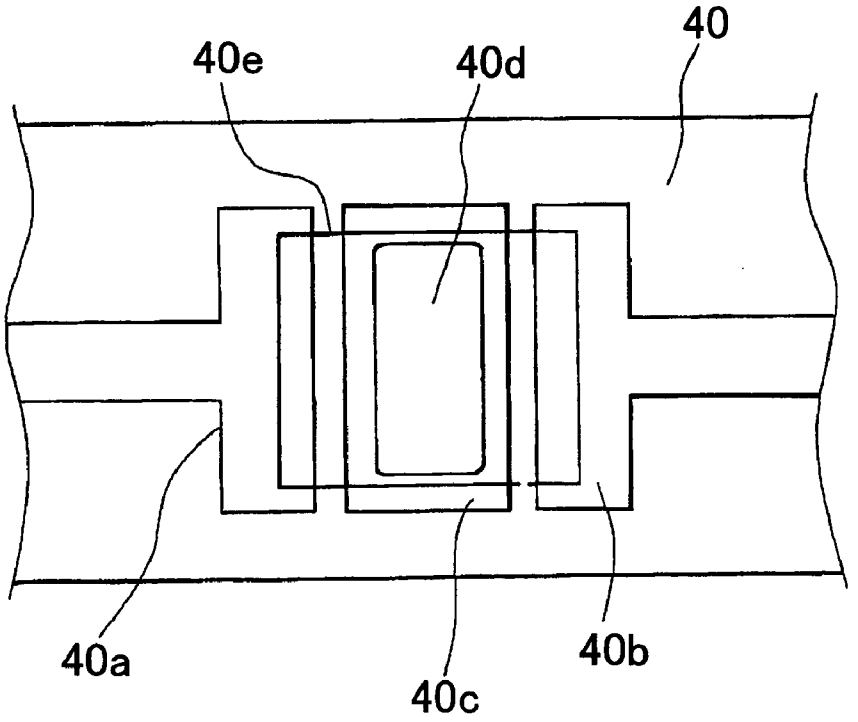
40
40e
40d
40a
40c
40b

FIG. 4

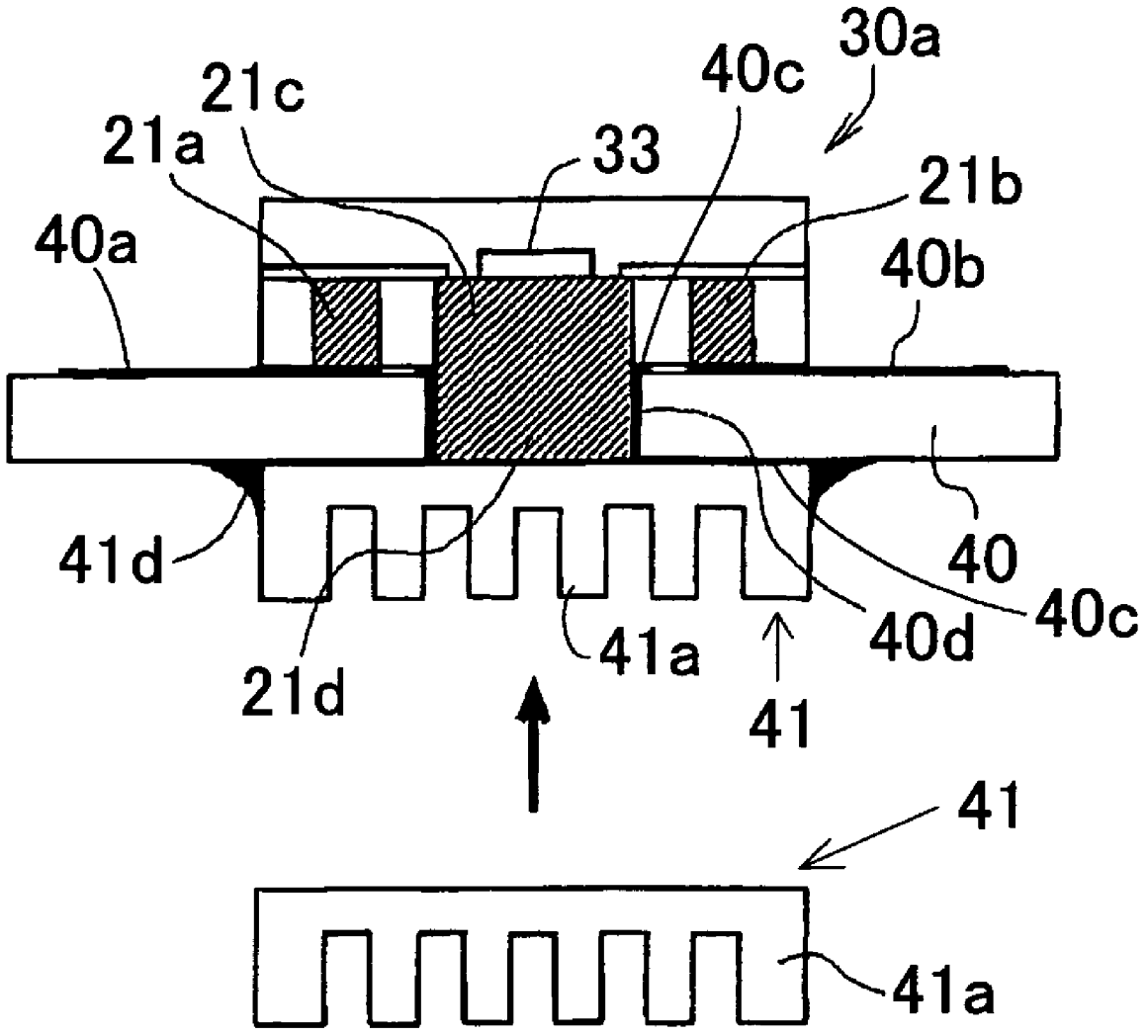

FIG. 5

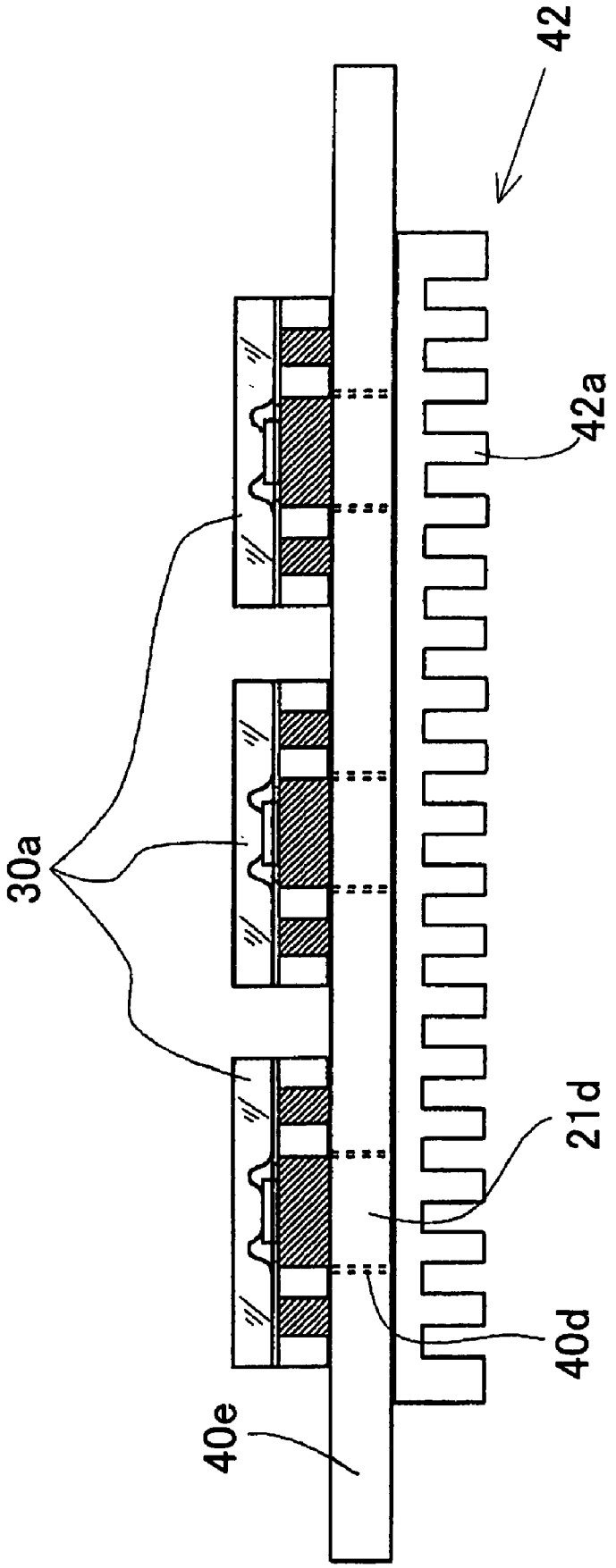

FIG. 6

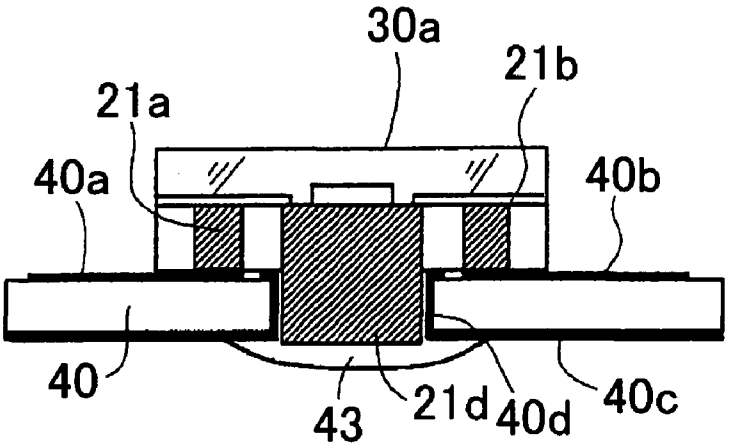

FIG. 7

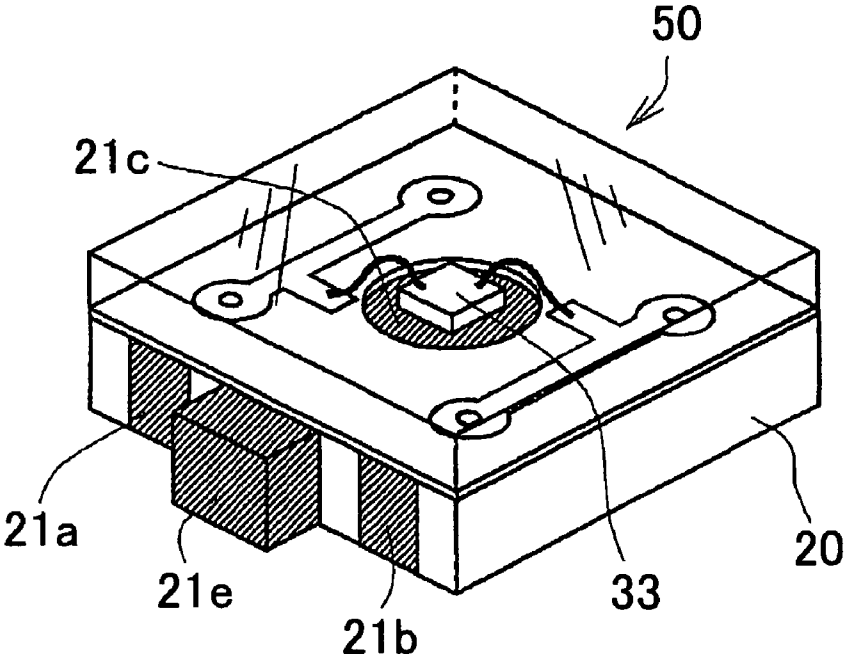

FIG. 8

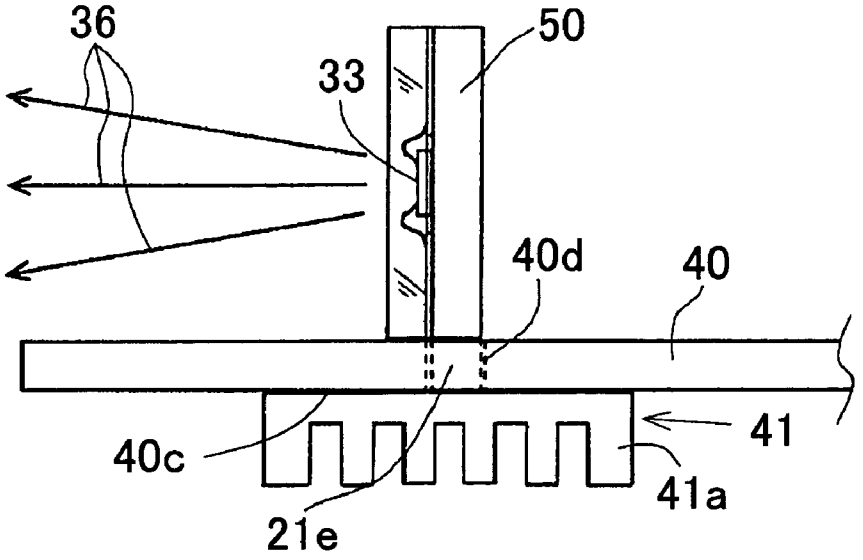
36
50
33
40d
40
41
40c
41a
21e

FIG. 9

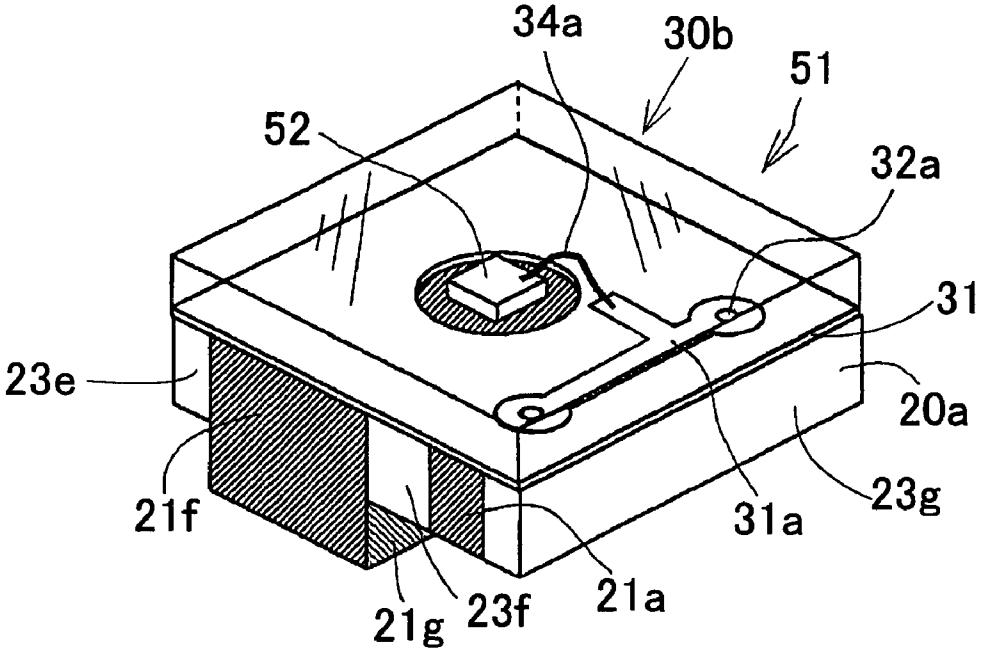
34a
30b
51
52
32a
31
23e
20a
21f
31a
23g
21g
23f
21a

FIG. 10

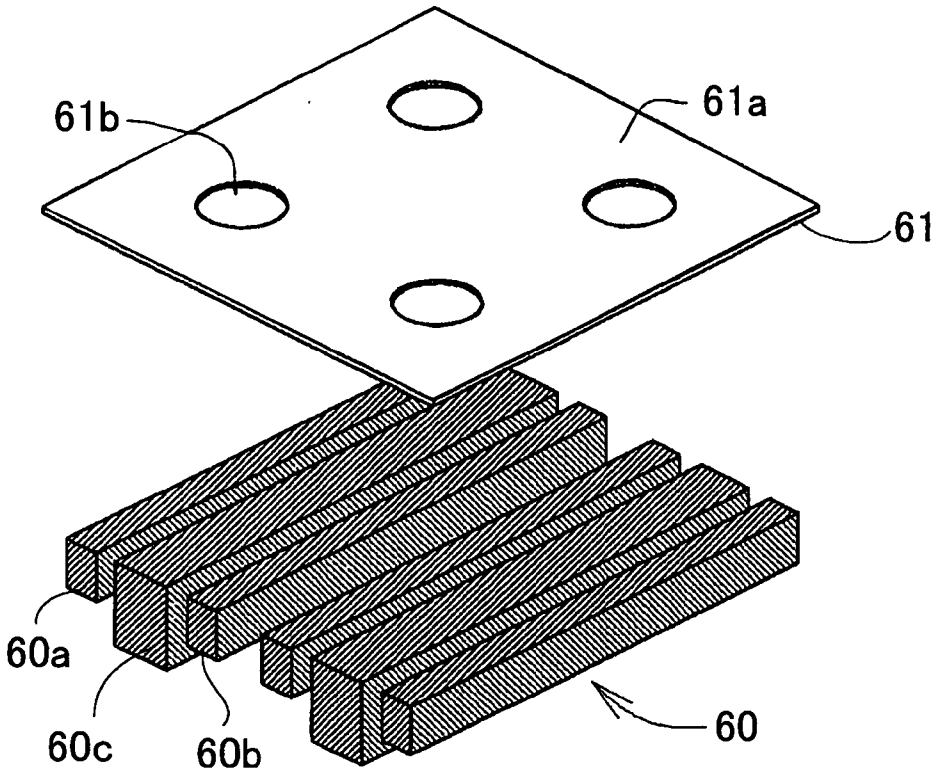
61b
61a
61
60a
60c
60b
60

FIG. 11

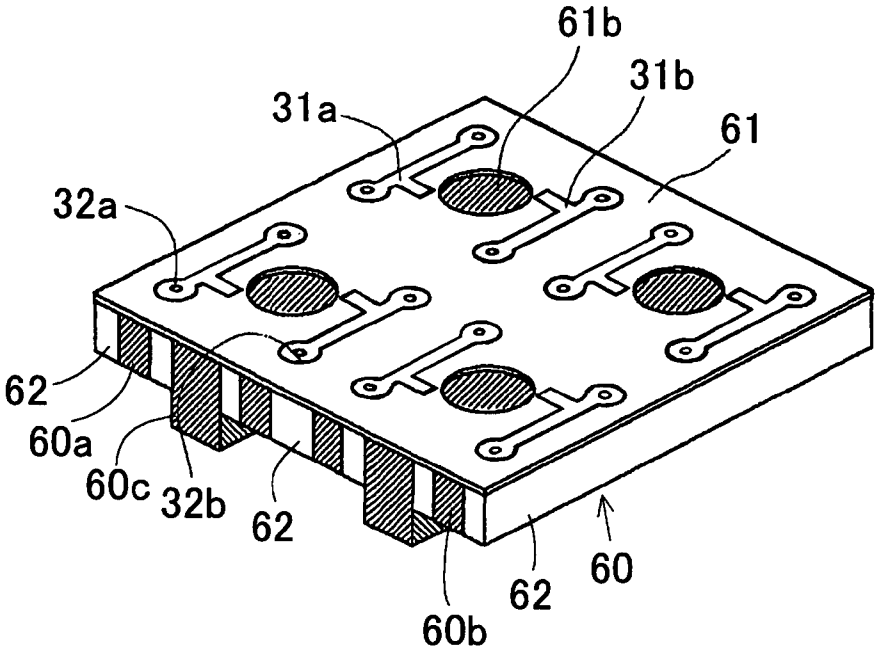
61b
31b
31a
61
32a
62
60a
60c
32b
62
62
60
60b

FIG. 12

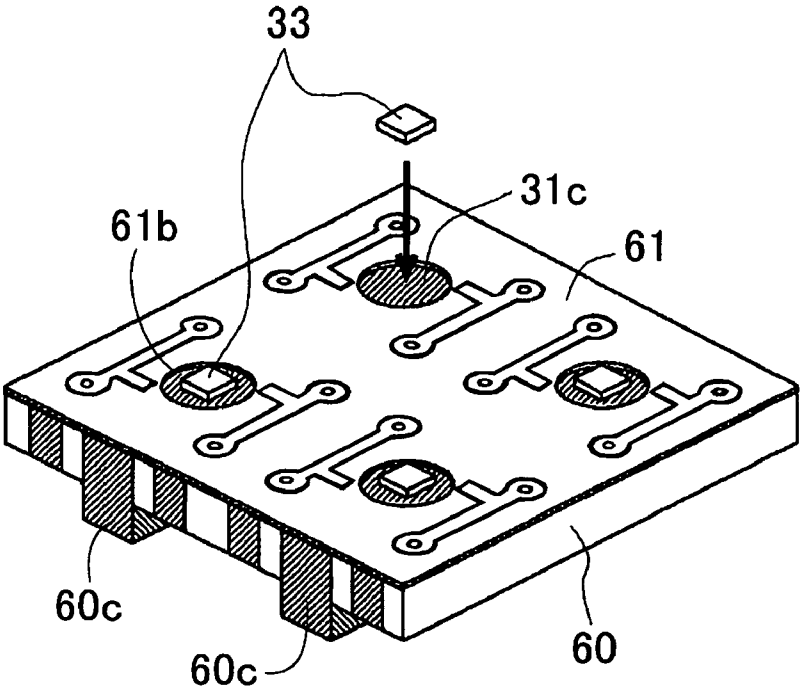

FIG. 13

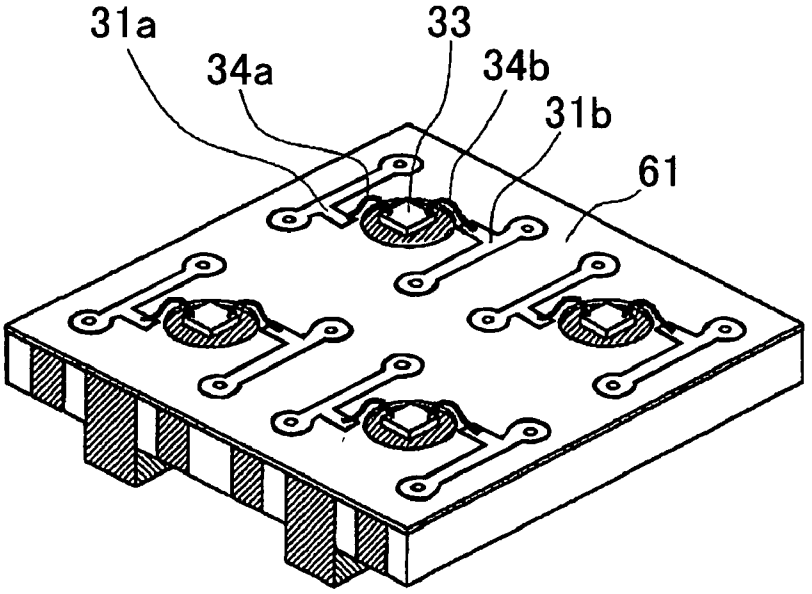

FIG. 14

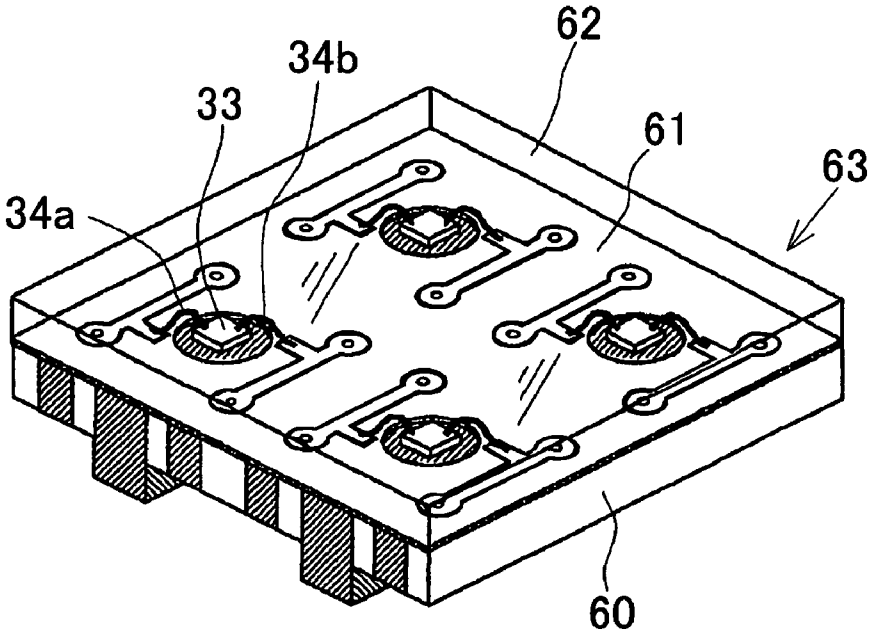

FIG. 15

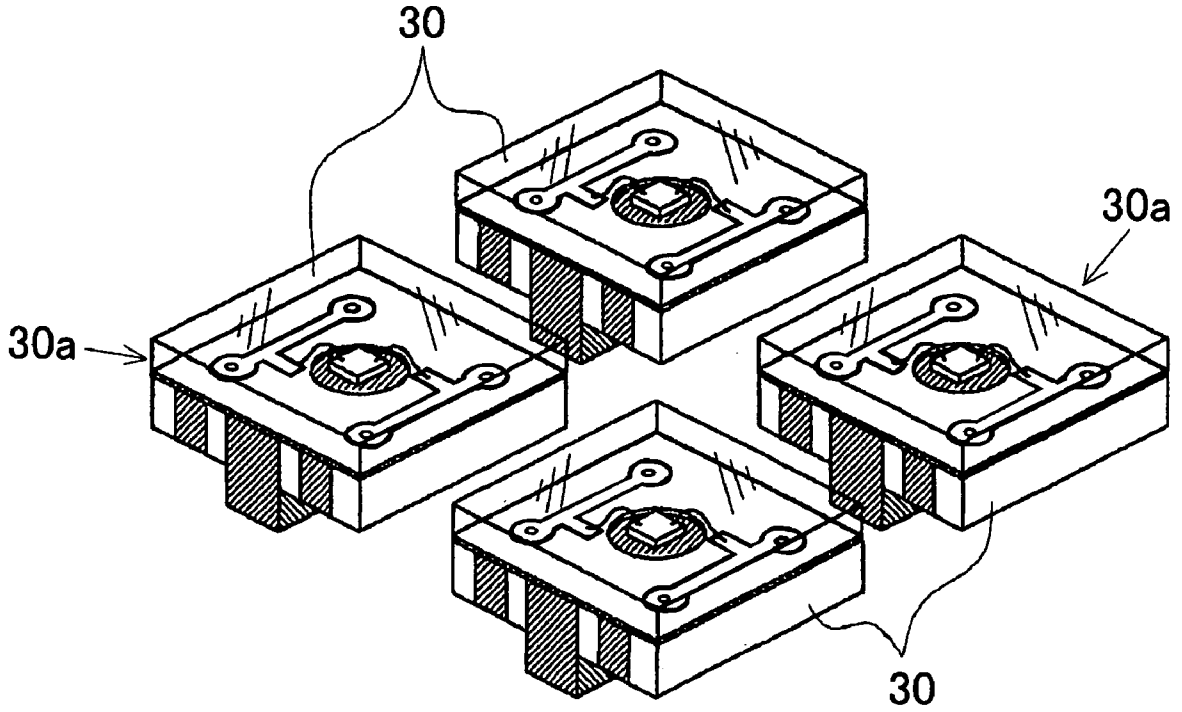

FIG. 16
PRIOR ART

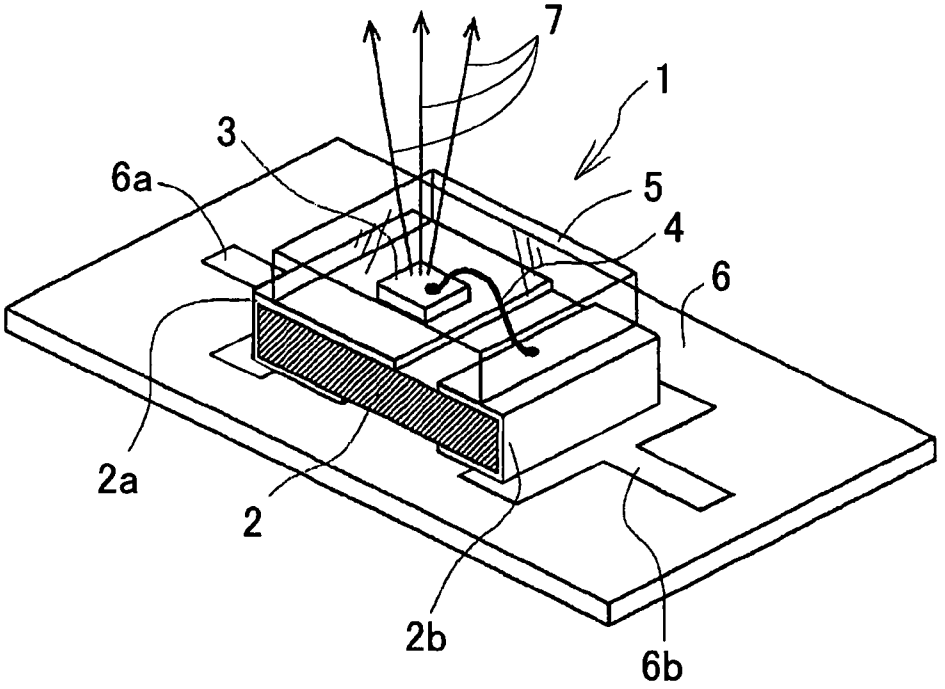

FIG. 17
PRIOR ART

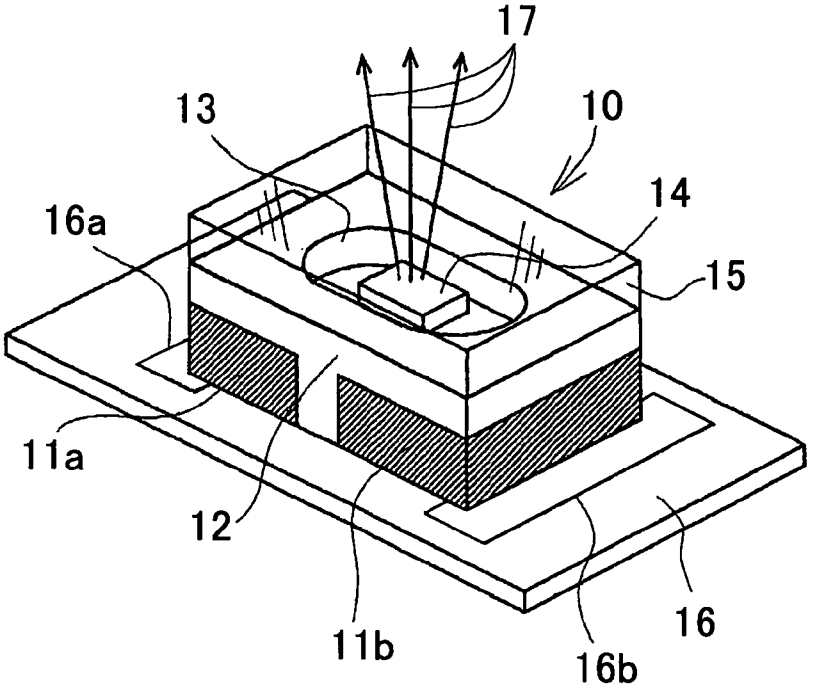

LIGHT EMITTING DEVICE PROVIDED WITH ELECTRICALLY CONDUCTIVE MEMBERS HAVING HIGH THERMAL CONDUCTIVITY FOR THERMAL RADIATION

BACKGROUND OF THE INVENTION

The present invention relates to a light emitting device using a light emitting diode (LED).

FIG. **16** is a perspective view showing a conventional light emitting device disclosed in Japanese Patent 3,302,203. The light emitting device **1** comprises a substrate **2** made of resin such as epoxy resin, a pair of electrodes **2***a* and **2***b* fixed to the substrate **2** at upper and lower side thereof, an LED **3** mounted on the electrode **2***a* and connected to the electrode **2***b* by a wire **4**, and an sealing member **5** made of a transparent resin for sealing the LED **3**.

The light emitting device **1** is mounted on a print substrate **6**, connecting the electrodes **2***a* and **2***b* with a pair of conductive patterns **6***a* and **6***b*.

When current is applied to the LED **3** from the patterns **6***a* and **6***b* through the electrodes **2***a* and **2***b*, the LED **3** emits light **7**.

The thickness of the light emitting device **1** can be reduced because the device is mounted on the print substrate **6** through thin electrodes **2***a* and **2***b*. However, the substrate **2** made of resin such as epoxy resin has a very low heat conductivity which is about one-hundredth of that of copper. Therefore, heat emitted from the LED **3** scarcely transmitted to the print substrate **6**. Consequently when a high current is applied to the LED in order to produce high brightness, the emitted heat becomes high temperature, which causes junctions in the LED to degrade, and the sealing member **5** to discolor which decreases the transparency of the member. Thus, the quality of the LED device largely reduces.

FIG. **17** is a perspective view of another conventional light emitting device disclosed in Japanese Patent Laid Open 11-307820, which is improved in heat radiation.

The light emitting device **10** comprises a pair of conductive members **11***a* and **11***b* made of metal having high heat conductivity, an insulation member **12** made of resin for insulating the conductive members **11***a* and **11***b* and combining the members. The insulation member has an opening **13** having an elongated circular shape. A part of each of the conductive members **11***a*, **11***b* is exposed in the opening. An LED **14** is secured to exposed parts of the conductive members **11***a*, **11***b*, so that the LED **14** is electrically and thermally connected to conductive members **11***a* and **11***b*. The LED **14** is sealed by a transparent sealing member **15**.

The light emitting device **10** is mounted on a print substrate **16**, and the conductive members **11***a* and **11***b* are connected to a pair of conductive patterns **16***a* and **16***b* by solders.

When current is applied to the LED **14** from the patterns **16***a* and **16***b* through conductive members **11***a* and **11***b*, the LED emits light **17**. Heat generated in the LED **14** is transmitted to the print substrate **16** through the conductive members **11***a* and **11***b*, so that the heat is efficiently radiated from the print substrate **16** if the substrate is made of a material having high heat conductivity.

However, the print substrate **16** is generally made of cheap material such as an epoxy resin. As described above, the epoxy resin has low heat conductivity. Therefore, the heat is not sufficiently transmitted to the print substrate, thereby rising the temperature of the LED, and reducing the quality thereof.

Here, if the print substrate is made with a metal having high heat conductivity, the heat radiation problem is resolved. However, the print substrate is not provided for mounting only the light emitting device, but for mounting other electrical parts such as CPU, memories and others.

For such other parts, the print substrate having high heat conductivity is not necessary. To the contrary, such as a print substrate made of metal causes the manufacturing cost of the electric device to increase.

SUMMARY OF THE INVENTION

An object of the present invention is to provide a light emitting device having an effective means for heat release.

According to the present invention, there is provided a light emitting device comprising a base member, a plurality of conductive members and insulating members for securing and isolating each conductive member provided in the base member, a light emitting diode assembly mounted on the base member, a light emitting diode provided in the light emitting device and mounted on the electric conductive member with high heat conductivity, connecting means for electrically connecting the light emitting element with the conductive member, a projection outwardly stretched for heat release from the other side of the conductive member thereon the light emitting diode mounted.

A circuit substrate is further provided in the light emitting device, and the connecting means includes a circuit pattern provided on the circuit substrate and a wire connecting the light emitting diode with the circuit pattern.

A print substrate having an opening, is provided the projection is inserted in the opening, and the base member is secured to the print substrate.

The circuit substrate has an opening, the light emitting diode is mounted on the conductive member exposed in the opening.

The conductive member has electrically conductivity for applying the current to the light emitting diode.

The print substrate has a light emitting diode driving pattern connected to the conductive member for applying the current to the light emitting diode, and a heat radiation pattern is formed on an inside wall of the opening and on the underside of the print substrate.

A cooling member is secured to the underside of the print substrate for cooling the light emitting diode.

The present invention further provides a method for manufacturing a light emitting device comprising the steps of combining of conductive members with insulating members such as an insulation resin to form a base member assembly, forming a circuit substrate assembly having a plurality of openings and circuit patterns, securing the circuit substrate assembly to the base member assembly, mounting each light emitting diode on the conductive member exposed in each opening of the circuit substrate assembly, connecting each light emitting diode with each circuit pattern by at least a wire, sealing the light emitting diodes and the wires on the circuit substrate assembly with a sealing member such as a transparent resin, and separating each independent light emitting device by dicing.

These and other objects and features of the present invention will become more apparent from the following detailed description with reference to the accompanying drawings.

BRIEF DESCRIPTION OF DRAWINGS

FIG. **1** is a perspective view showing a base member used for a light emitting device of the present invention;

FIG. **2** is a perspective view showing the light emitting device of the present invention;

FIG. **3** is a plan view showing a print substrate used for a light emitting device of the present invention;

FIG. **4** is a sectional view of the light emitting device mounted on the print substrate set with a cooling member;

FIG. **5** is a side view of arranged plural light emitting devices mounted on the print substrate showing another example as a first embodiment of the present invention;

FIG. **6** is a sectional view showing a further another example of the light emitting device of the present invention;

FIG. **7** is a perspective view showing a light emitting device according to a second embodiment of the present invention;

FIG. **8** is a side view showing the light emitting device mounted on a print substrate set with a plurality of cooling fins according to a second embodiment of the present invention;

FIG. **9** is a perspective view showing a light emitting device according to a third embodiment of the present invention;

FIG. **10** is a perspective view of a conductive member assembly and a circuit substrate assembly showing a step for manufacturing a plurality of light emitting devices according to a first embodiment of the present invention;

FIG. **11** is a perspective view of an assembly of the conductive member assembly and circuit assembly showing a step for manufacturing a plurality of light emitting devices according to a first embodiment of the present invention;

FIG. **12** is a perspective view showing an LED mounting step for manufacturing a plurality of light emitting devices according to a first embodiment of the present invention;

FIG. **13** is a perspective view showing a wire bonding step for manufacturing a plurality of light emitting devices according to a first embodiment of the present invention;

FIG. **14** is a perspective view showing a sealing step for manufacturing a plurality of light emitting devices according to a first embodiment of the present invention;

FIG. **15** is a perspective view showing a separating step of the light emitting device assembly for manufacturing a plurality of light emitting devices according to a first embodiment of the present invention;

FIG. **16** is a perspective view showing a conventional light emitting device; and

FIG. **17** is a perspective view of another conventional light emitting device.

DETAILED DESCRIPTION OF THE PREFERRED EMBODIMENT

FIG. **1** is a perspective view showing a base member used for a light emitting device according to a first embodiment of the present invention, and FIG. **2** is a perspective view showing the light emitting device for a first embodiment of the present invention.

A base member **20** comprises electric conductive members **21***a*, **21***b*, and **21***c*, and four insulating members **23***a*-**23***d* made of resin. The insulating members **23***b* and **23***c* electrically isolate the conductive members **21***a*, **21***b* and **21***c* and combine these members. The conductive member **21***c* is made of a metal having a high heat conductivity. Each of the members has a quadratic prism. The conductive member **21***c* has a lower projection **21***d*.

Referring to FIG. **2** showing a light emitting device **30***a* of the present invention, the light emitting device **30***a* comprises a light emitting element assembly **30** and the base member **20**.

The light emitting element assembly **30** has a circuit substrate **31** secured to the upper surface of the base member **20** by thermo compression bonding. The circuit substrate **31** has a pair of circuit patterns **31***a* and **31***b* of copper foil formed on the surface thereof and an opening **31***c* formed at a central portion, exposing a part of the upper surface of the heat conductive member **21***c*. Through-holes **32***a* and **32***b* are provided in the patterns **31***a* and **31***b* for electrically connecting the patterns with the conductive members **21***a* and **21***b*. An LED **33** is mounted on the exposed portion of the heat conductive member **21***c* by Ag paste. Thus, the LED **33** is thermally connected to the heat conductive member **21***c*. The anode and cathode (not shown) of the LED **33** are connected to the circuit patterns **31***a* and **31***b* by wires **34***a* and **34***b*. Thus, the electrodes of the LED **33** are electrically connected with conductive members **21***a* and **21***b* through patterns **31***a* and **31***b* and through-holes **32***a* and **32***b*. The LED **33** and wires **34***a* and **34***b* are sealed by a sealing member **35**.

FIG. **3** is a plan view showing a print substrate used for a light emitting device of the present invention according to a first embodiment, and FIG. **4** is a sectional view of the light emitting device mounted on the print substrate.

The print substrate **40** has a pair of LED driving patterns **40***a* and **40***b* each having a T-shape, and a heat radiation opening **40***d* having a shape for receiving the lower projection **21***d* of the heat conductive member **21***c*. A heat radiation pattern **40***c* is formed on the surface of the print substrate **40** around the heat radiation opening **40***d*, on the inside wall of the opening **40***d*, and on the underside of the print substrate **40**.

As shown in FIG. **4**, the opening **40***d* has a depth equal to the height of the projection **21***d*. The light emitting device **30***a* is mounted on the print substrate **40**, inserting the projection **21***d* in the opening **40***d*.

The conductive members **21***a* and **21***b* are secured to the LED driving patterns **40***a* and **40***b* with a solder (not shown). In FIG. **3**, a square line **40***e* shows a mounting area of the light emitting device **30***a*. Thus, the LED **33** is electrically connected to the LED driving patterns **40***a* and **40***b* through the wires **34***a*, **34***b*, patterns **31***a*, **31***b*, through-holes **32***a*, **32***b*, and conductive members **21***a*, **21***b*.

The underside of the projection **21***d* is at substantially same level as the underside of the print substrate **40**. As shown in FIG. **4**, a cooling member **41** made of heat transmissive metal and having a plurality of cooling fins **41***a* is attached to the heat radiation pattern **40***c* on the underside of the print substrate and secured to the pattern **40***c* by a solder **41***d*.

Thus, the LED **33** is thermally connected with the cooling member **41** through the exposed portion of the heat conductive member **21***c*, projection **21***d*, and heat radiation pattern **40***c*.

When a driving voltage is applied to the LED driving patterns **40***a* and **40***b*, the voltage is applied to the LED **33** through the conductive members **21***a* and **21***b*, through-holes **32***a* and **32***b*, patterns **31***a* and **31***b*, and wires **34***a* and **34***b*. Thus, the LED **33** is driven to emit light, and heats up. The heat of the LED is transmitted to the cooling member **41** through the conductive member **21***c* as a heat sink and the

heat radiation pattern **40***c*. Thus, the transmitted heat is cooled by the cooling fins **41***a*.

Although the single LED **33** is mounted on the conductive member **21***c* in the above described embodiment, a plurality of LEDs **33** may be mounted on the conductive member **21***c*, the current is applied to each LED through an independent circuit.

FIG. **5** is a side view showing another example of the first embodiment of the present invention. As shown in FIG. **5**, three heat radiation openings **40***d* are formed in a long print substrate **40***e*. Three light emitting devices **30***a* are mounted on the print substrate **40**, inserting each projection **21***d* in the heat radiation opening **40***d*. A long cooling member **42** having a plurality of cooling fins **42***a* and having construction similar to the cooling member **41** is secured to the underside of the print substrate **40***e*.

In the example of the light emitting device, since the single print substrate **40***e* is provided for three light emitting devices **30***a*, the mounting operations and the construction are simplified, and the area of the device is reduced compared with the area occupied by three independent devices.

FIG. **6** is a sectional view showing a further another example of the light emitting device of the present invention.

The light emitting device **30***a* has the heat radiation pattern **40***c* at the underside of the print substrate, which has a large area compared with that of the first embodiment. The projection **21***d* is connected with the heat radiation pattern **40***c* by a wide solder **43** having a large thickness. Therefore, the heat radiation pattern **40***c* and the solder **43** efficiently radiate the heat from the projection **21***d*. Since the cooling member **41** is not provided, the mounting operation and construction are simplified, and manufacturing cost is reduced.

FIG. **7** is a perspective view showing a light emitting device according to a second embodiment of the present invention. The same parts as the first embodiment are identified by the same reference numerals as those of the first embodiment, and the description thereof is omitted. A light emitting device **50** has a heat transmissive member different from the first embodiment.

The heat conductive member **21***c* has a projection **21***e* laterally projected from a side end thereof.

FIG. **8** is a side view showing the light emitting device **50** mounted on a print substrate. The light emitting device **50** is mounted on the print substrate **40**, inserting the lateral projection **21***e* in the opening **40***d*. Thus, the light emitting device **50** is mounted in an upright position. Therefore, the LED **33** emits light **36** in a horizontal direction.

The heat emitted by the LED **33** is transmitted to the cooling member **41** through the conductive member with good heat conductivity **21***c*, and the heat radiation pattern **40***c*, and radiated from the cooling member **41**. Thus, the LED **33** is cooled.

FIG. **9** is a perspective view showing a light emitting device according to a third embodiment of the present invention.

The light emitting device **51** comprises a base member **20***a* and a light emitting element assembly **30***b*. The base member **20***a* comprises the conductive member **21***a*, a conductive member **21***f* having heat and electricity conductivity, and insulation members **23***e*, **23***f* and **23***g*. An LED **52** is mounted on the conductive member **21***f*, so that an electrode on the underside of the LED is connected to the conductive member **21***f*. The circuit substrate **31** has only the pattern **31***a* which is connected to an electrode on the LED **52** by the wire **34***a*. Thus, the LED **52** is electrically connected to the conductive member **21***a* and electrically and thermally connected to the conductive member **21***f* as a heat sink.

In accordance with the third embodiment, since only the single pattern **31***a* and a pair of conductive members **21***a* and **21***f* are provided, the construction is simplified.

Next, method for manufacturing a plurality of the light emitting devices **30***a* of the first embodiment will be described hereinafter.

FIG. **10** is a perspective view showing a conductive member assembly **60** and a circuit substrate assembly **61**. The conductive member assembly **21** comprises six long conductive members **60***a*, **60***b* and **60***c* corresponding to the conductive members **21***a*, **21***b* and **21***c*.

The circuit substrate assembly **61** is made of resin and has a copper foil film **61***a* on the upper surface thereof. The circuit substrate assembly has four divisions and four openings **61***b* in the divisions.

FIG. **11** is a perspective view of an assembly of the conductive member assembly and circuit assembly. The conductive members **60***a*, **60***b* and **60***c* are secured to the underside of the circuit substrate assembly **61** by the thermo compression bonding. Thereafter, the spaces between the conductive members **60***a*, **60***b* and **60***c* are charged with resin to form insulation members **62**.

Next, a plurality of through-holes are formed and coated with copper, then by etching four sets of copper foil patterns **31***a* and **31***b* are formed at predetermined positions.

FIG. **12** is a perspective view showing an LED mounting step. The LED **33** is mounted on the conductive member **60***c* at the exposed portion in each of the openings **61***b* by a silver paste.

FIG. **13** is a perspective view showing a wire bonding step. Each LED **33** is electrically connected to the copper foil patterns **31***a* and **31***b* by the wires **34***a* and **34***b*.

FIG. **14** is a perspective view showing an encapsulating step. As shown in FIG. **14**, the upper surface of the circuit substrate assembly **61** is covered by an encapsulation member **62**, thereby encapsulating each LED **33** and wires **34***a* and **34***b*. Thus, a light emitting device assembly **63** is finished.

FIG. **15** is a perspective view showing a separating step of the light emitting device assembly. The light emitting device assembly **63** is diced between adjacent divisions. Thus, four light emitting devices **30***a* are produced.

In accordance with the present invention, since the LED is directly mounted on a conductive member having a high heat conductivity, the LED is efficiently cooled. Therefore, the characteristic of the LED is kept so that the reliability of the LED is heightened.

While the invention has been described in conjunction with preferred specific embodiment thereof, it will be understood that this description is intended to illustrate and not limit the scope of the invention, which is defined by the following claims.

What is claimed is:

1. A light emitting device having an optical axis, comprising:

a base member formed from a plurality of electric conductive members alternating with insulating members, the members being arranged in a direction perpendicular to the optical axis of the light emitting device, each of the insulating members being disposed to secure and isolate conductive members, the base member presenting first and opposite faces which are composed of alternating conductive and insulating members;

a circuit substrate having an opening and which is secured to the first face of the base member, the opening being provided for exposing a part of an upper surface of one of the conductive members;

a light emitting diode mounted on the exposed portion of the upper surface of the conductive member;

an electrically connecting means to connect the light emitting diode with at least two of the conductive members for applying current to the light emitting diode;

a sealing member covering the light emitting diode and the electrically connecting means for protection; and

a projection outwardly extended for heat radiation from a side of the conductive member different from the side on which the light emitting diode is mounted.

2. The device according to claim **1** wherein the projection is connected to an external cooling member for heat radiation.

3. The device according to claim **2** further comprising an external print substrate secured to the base member at the opposite face thereof and having an opening so as to insert the projection of the conductive member and to contact the projection with the cooling member secured to the print substrate at the other side thereof.

4. The device according to claim **2** wherein the cooling member has a plurality of cooling fins.

5. A light emitting device having an optical axis, comprising:

a base member formed by combining at least first and second electric conductive members and insulating members, the members being arranged in a direction perpendicular to the optical axis of the light emitting device, each of the insulating members disposed to secure and isolate each of the conductive members;

a circuit substrate mounted on the base member, the circuit substrate having an opening which exposes a part of an upper surface of the first conductive member;

a light emitting diode mounted on the upper surface of the first conductive member within the opening; and

electrical connecting means provided on the circuit substrate for electrically connecting the light emitting diode with at least the second conductive member.

6. The device according to claim **5**, further comprising a projection projected from at least a surface different from the upper surface of the first conductive member.

7. The device according to claim **6**, further comprising an external cooling member for heat radiation, wherein the projection is connected to the external cooling member.

8. The device according to claim **5**, wherein the circuit substrate has at least one circuit pattern secured thereto and at least one wire connected between the circuit pattern and the light emitting diode so as to apply current to the light emitting diode.

9. The device according to claim **6**, further comprising an external print substrate secured to the base member at an upper side thereof and having an opening so as to insert the projection of the conductive member and to contact the projection with the cooling member secured to the print substrate at the other side thereof.

10. The device according to claim **7**, wherein the cooling member has a plurality of cooling fins.

11. A light emitting device having an optical axis, comprising:

a base member formed by combining at least three electric conductive members and insulating members, the members being arranged in a direction perpendicular to the optical axis of the light emitting device, each of the insulating members being disposed to secure and isolate each of the conductive members;

a circuit substrate mounted on the base member, the circuit substrate having an opening which exposes a part of an upper surface of a first of said conductive members;

a light emitting diode mounted on the upper surface of the first conductive member within the opening;

electrically connecting means provided on the circuit substrate for electrically connecting the light emitting diode with the second and third conductive members;

a projection outwardly extended for heat radiation from the other side of the upper surface of the first conductive member.

12. The device according to claim **11**, wherein the projection is connected to an external cooling member for heat radiation.

13. The device according to claim **11**, wherein the circuit substrate has at least one circuit pattern secured thereto and at least one wire connected between the circuit pattern and the light emitting diode so as to apply current to the light emitting diode.

14. The device according to claim **12**, further comprising an external print substrate secured to the base member at an upper side thereof and having an opening so as to insert the projection of the conductive member and to contact the projection with the cooling member secured to the print substrate at the other side thereof.

15. The device, according to claim **12**, wherein the cooling member has a plurality of cooling fins.

* * * * *