US 20010024250A1

(19) United States

(12) Patent Application Publication

(10) Pub. No.: US 2001/0024250 A1

(43) Pub. Date: Sep. 27, 2001

Fujishiro et al.

(54) LIQUID CRYSTAL DISPLAY AND LIGHT SOURCE DEVICE USED FOR THE SAME

(76) Inventors: **Fumihiko Fujishiro**, Tokyo (JP); **Tsutomu Kanatsu**, Tokyo (JP); **Fumio Hasegawa**, Tokyo (JP); **Shin-Ichirou Ono**, Tokyo (JP); **Hirokazu Fukuyoshi**, Tokyo (JP)

Correspondence Address:
McGinn & Gibb, PLLC
Suite 200
8321 Old Courthouse Road
Vienna, VA 22182-3817 (US)

(21) Appl. No.: **09/805,139**

(22) Filed: **Mar. 14, 2001**

(30) **Foreign Application Priority Data**

Mar. 15, 2000 (JP) 073040/2000

Publication Classification

(51) **Int. Cl.**[7] **G02F 1/1335**

(52) **U.S. Cl.** **349/65**

(57) **ABSTRACT**

A light emission surface having a substantially single surface in a liquid crystal display **1** is designed so as to be opposite to a rear of a liquid crystal panel **2** or a rear of an optical member **5** through an air layer. Thus, it is possible to provide a liquid crystal display that can prevent a heat accumulation in a liquid crystal panel without any drop of brightness, and a light source device used in the liquid crystal display.

Fig. 1A PRIOR ART

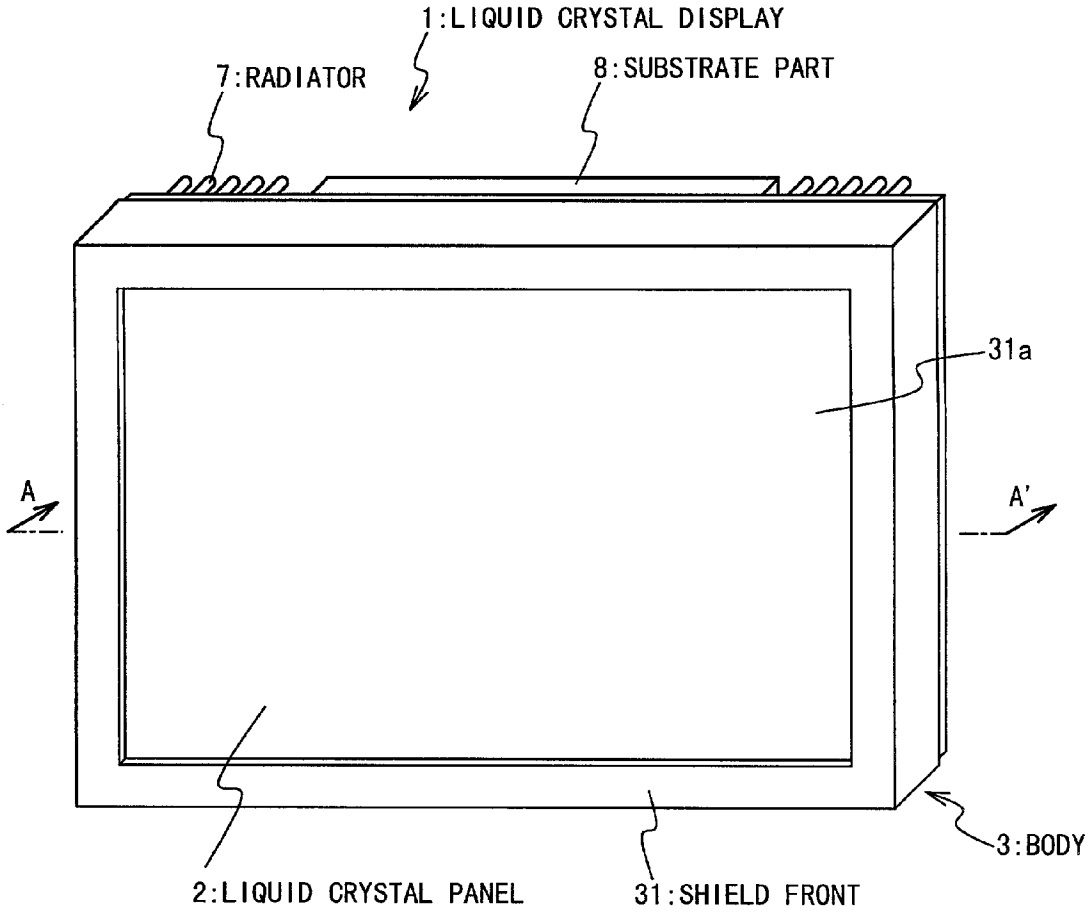

Fig. 1B PRIOR ART

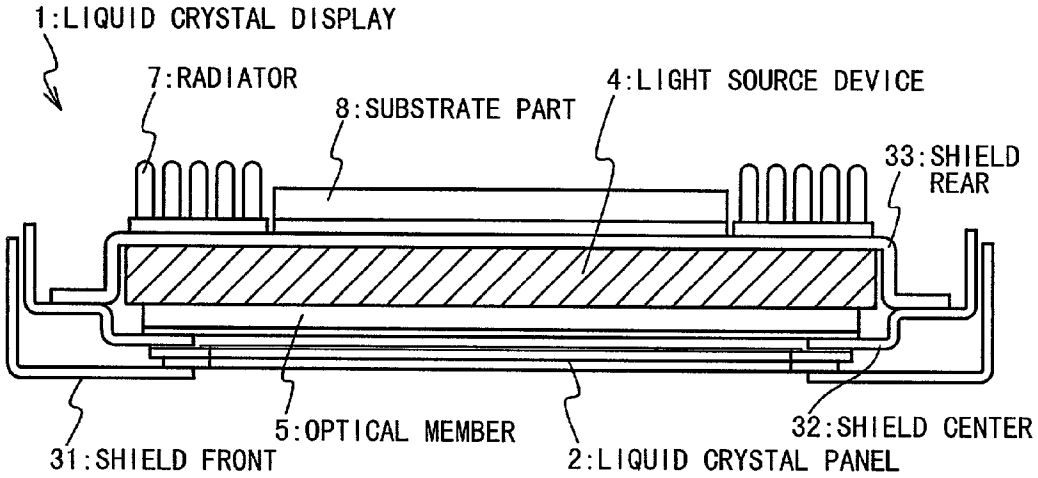

Fig. 2A PRIOR ART

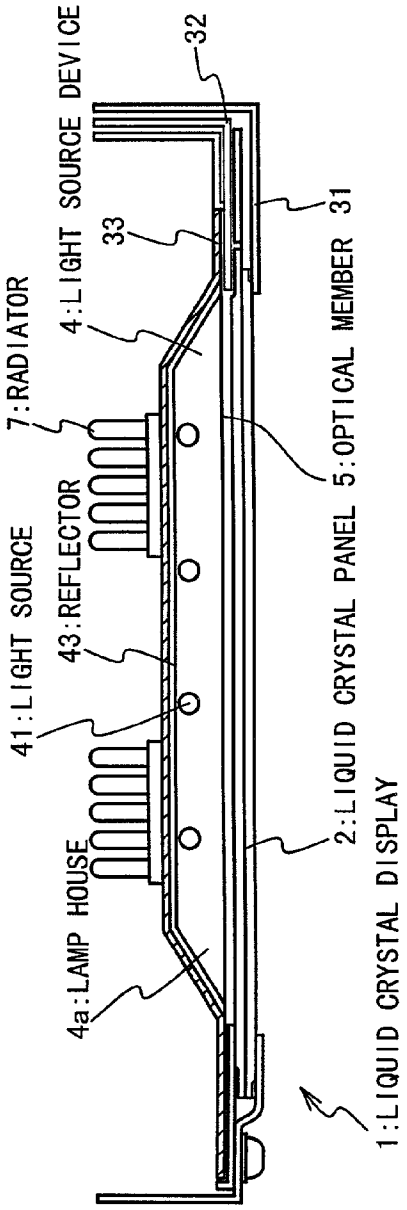

Fig. 2B PRIOR ART

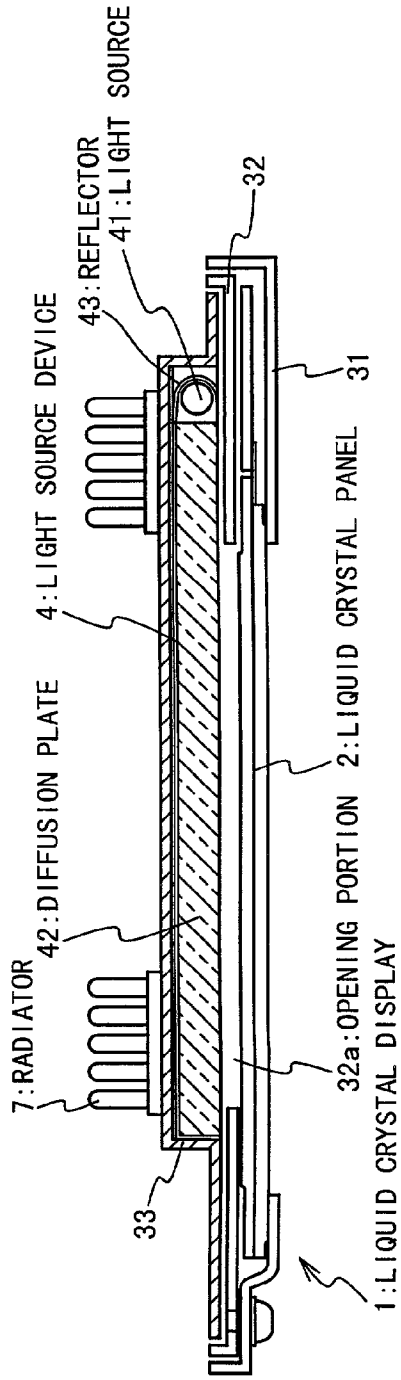

Fig. 3 PRIOR ART

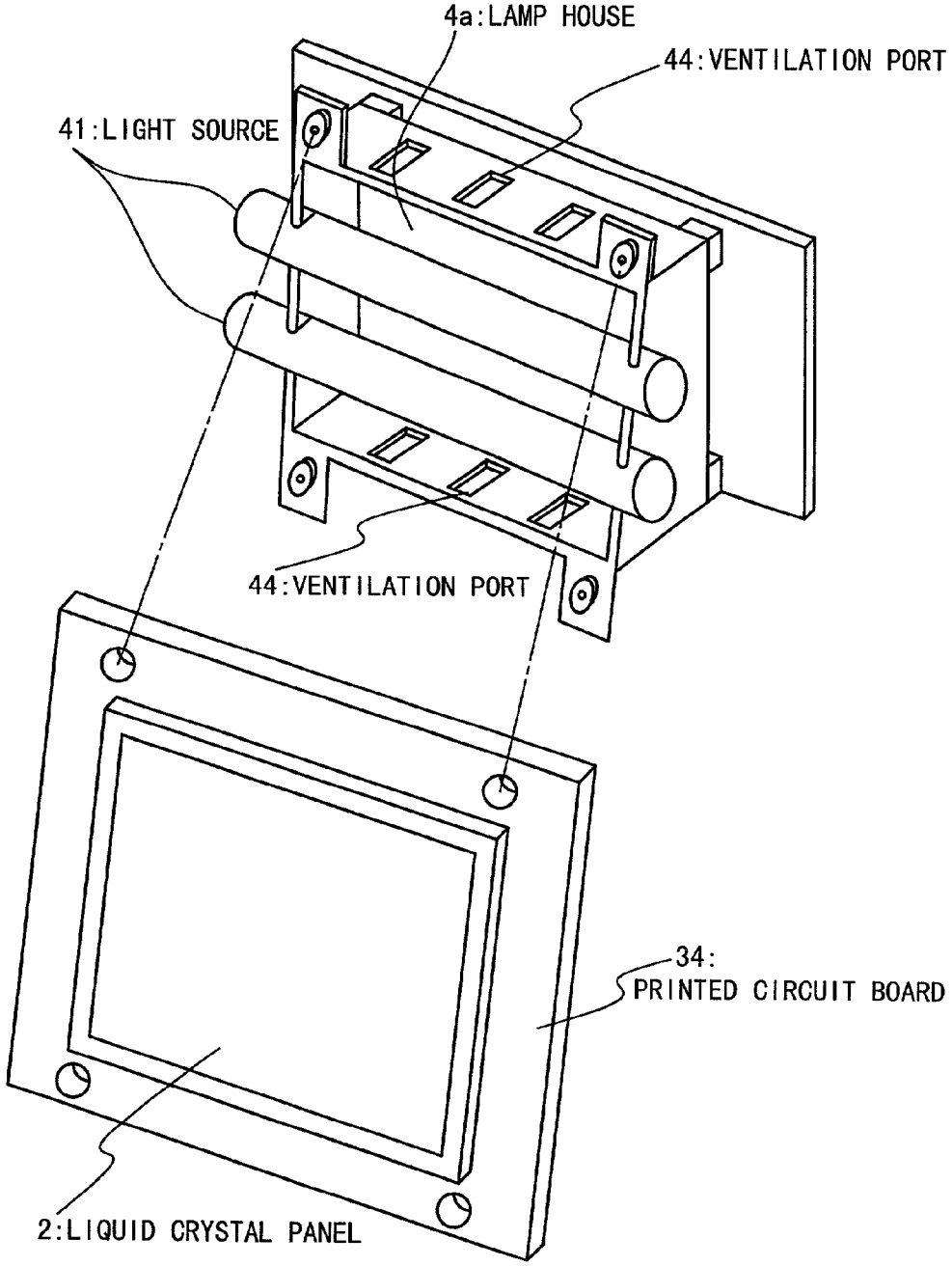

Fig. 4 PRIOR ART

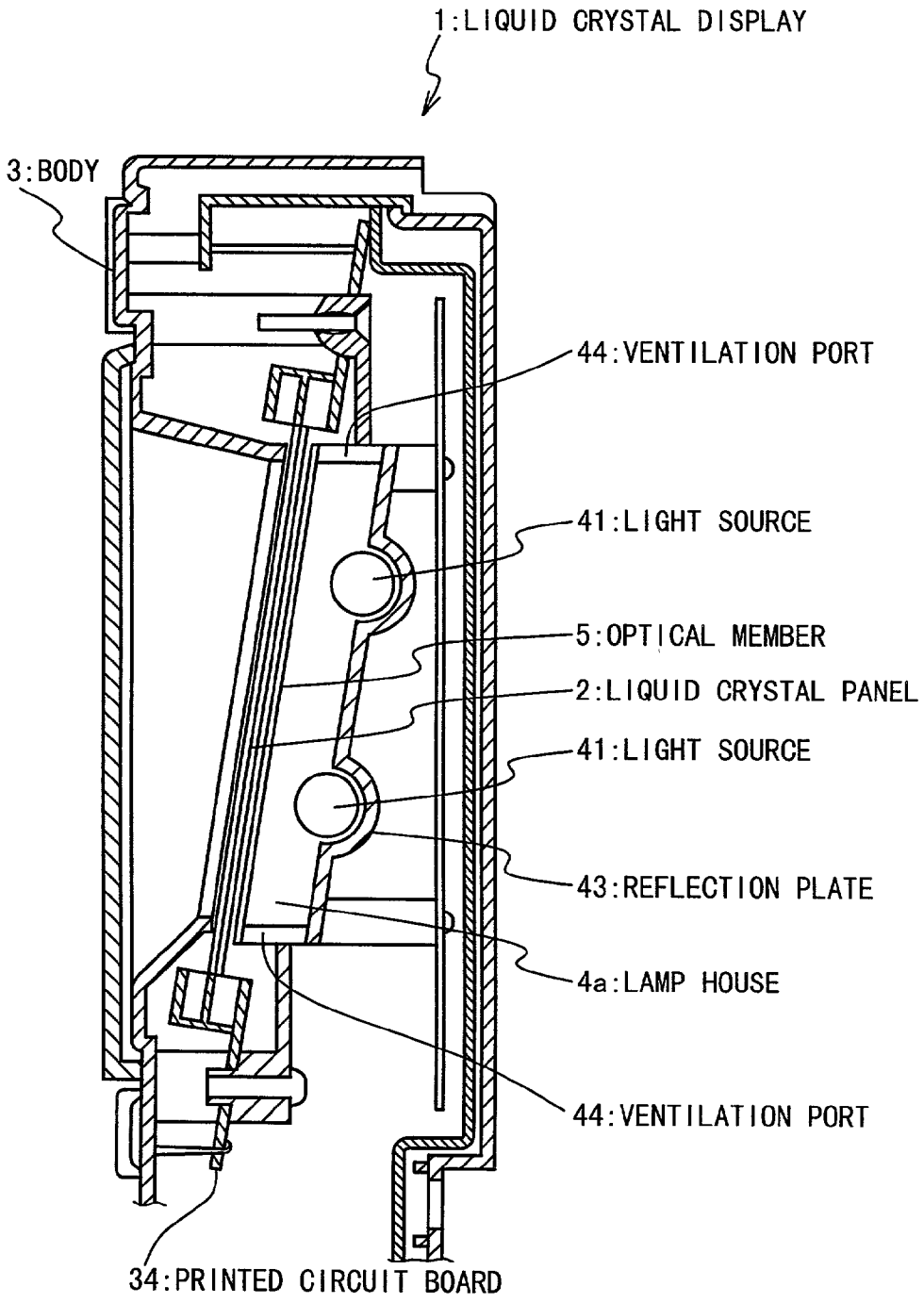

Fig. 5A

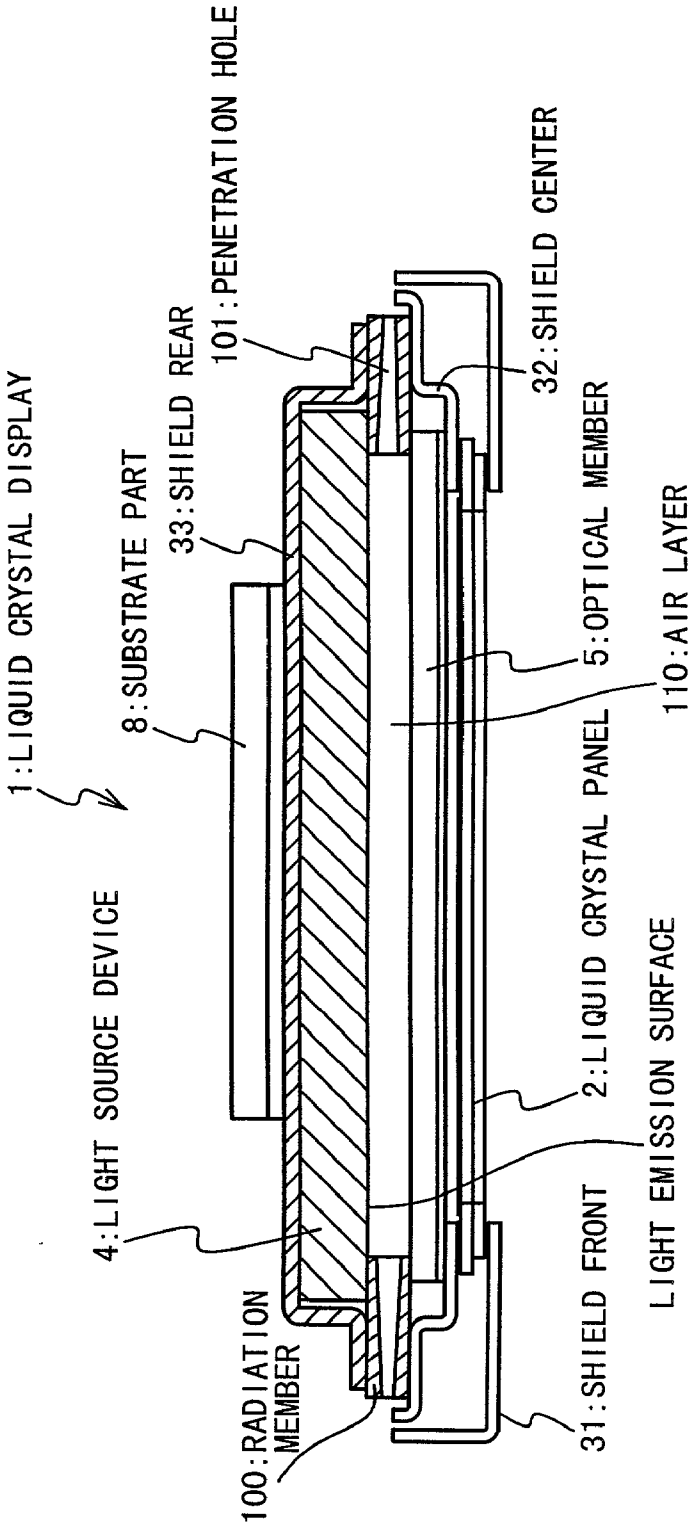
1:LIQUID CRYSTAL DISPLAY
8:SUBSTRATE PART
33:SHIELD REAR
101:PENETRATION HOLE
32:SHIELD CENTER
5:OPTICAL MEMBER
110:AIR LAYER
2:LIQUID CRYSTAL PANEL
LIGHT EMISSION SURFACE
31:SHIELD FRONT
4:LIGHT SOURCE DEVICE
100:RADIATION MEMBER

Fig. 5B

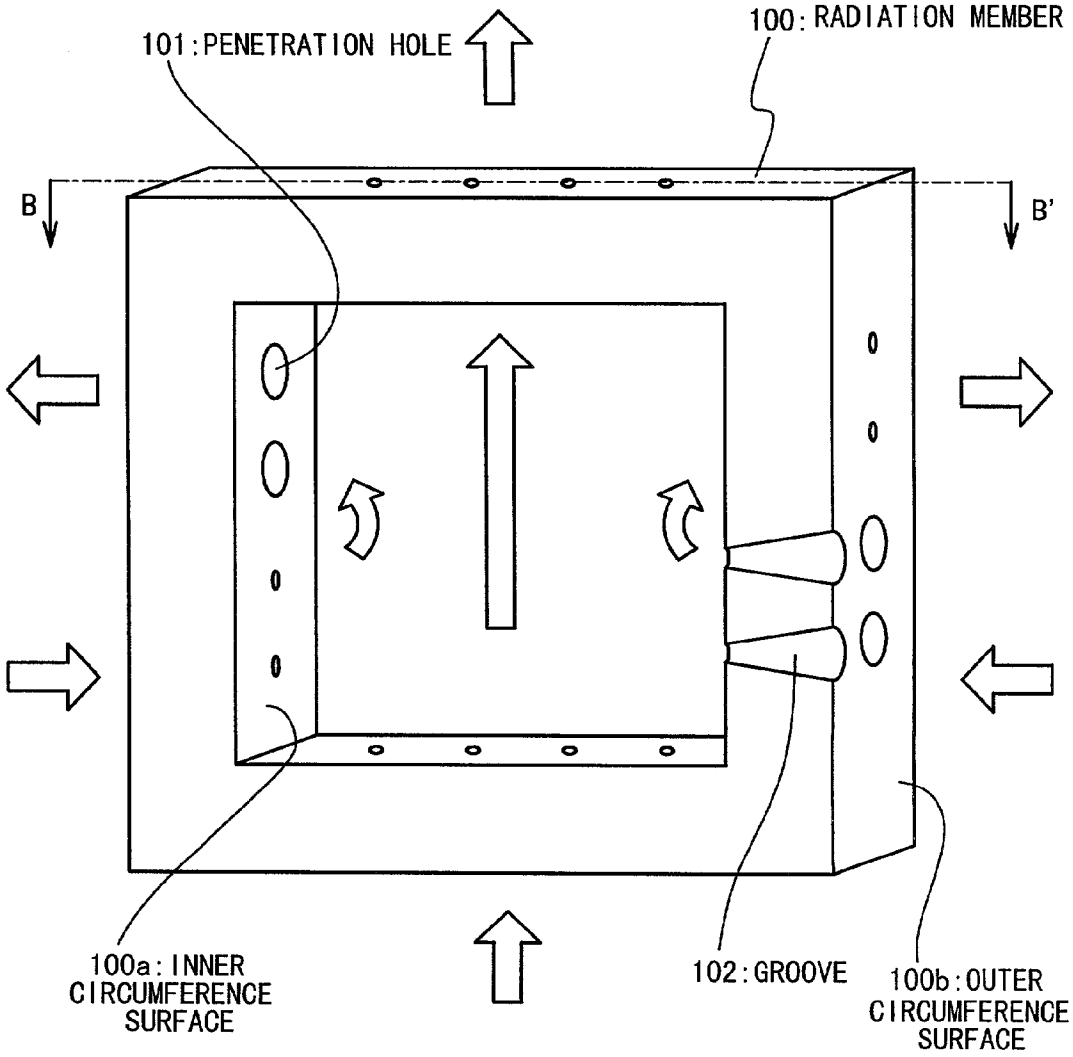
101:PENETRATION HOLE
100:RADIATION MEMBER
B
B'
100a:INNER CIRCUMFERENCE SURFACE
102:GROOVE
100b:OUTER CIRCUMFERENCE SURFACE

Fig. 6A

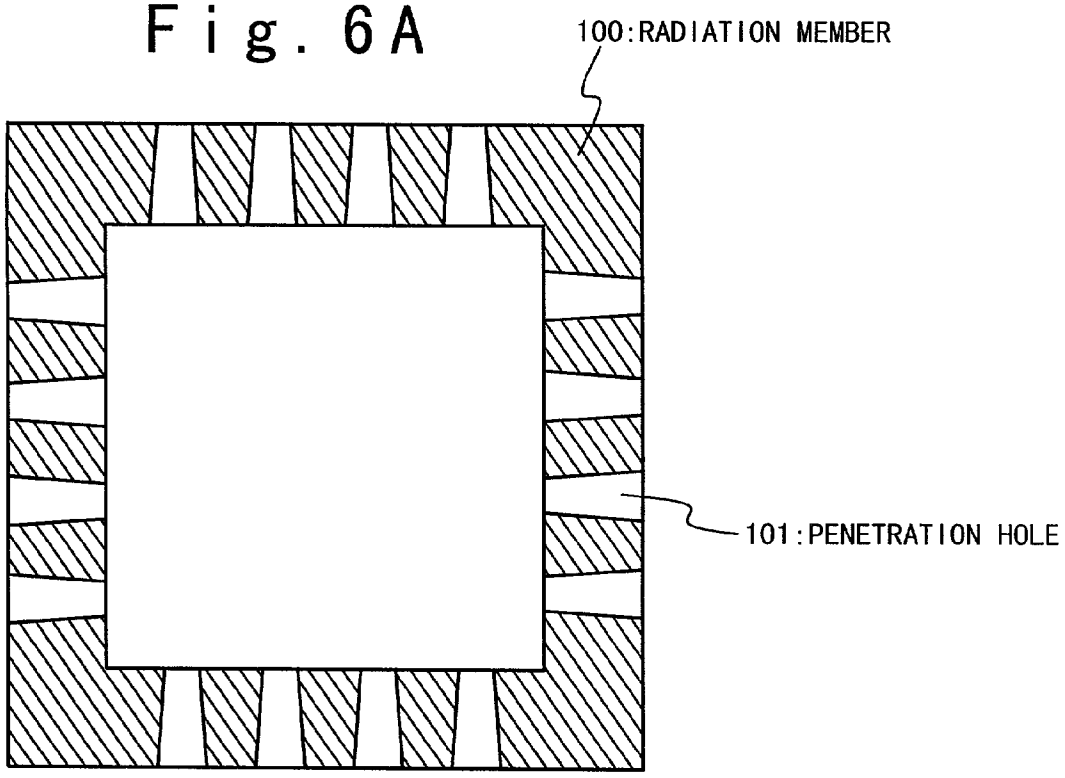
100:RADIATION MEMBER
101:PENETRATION HOLE

Fig. 6B

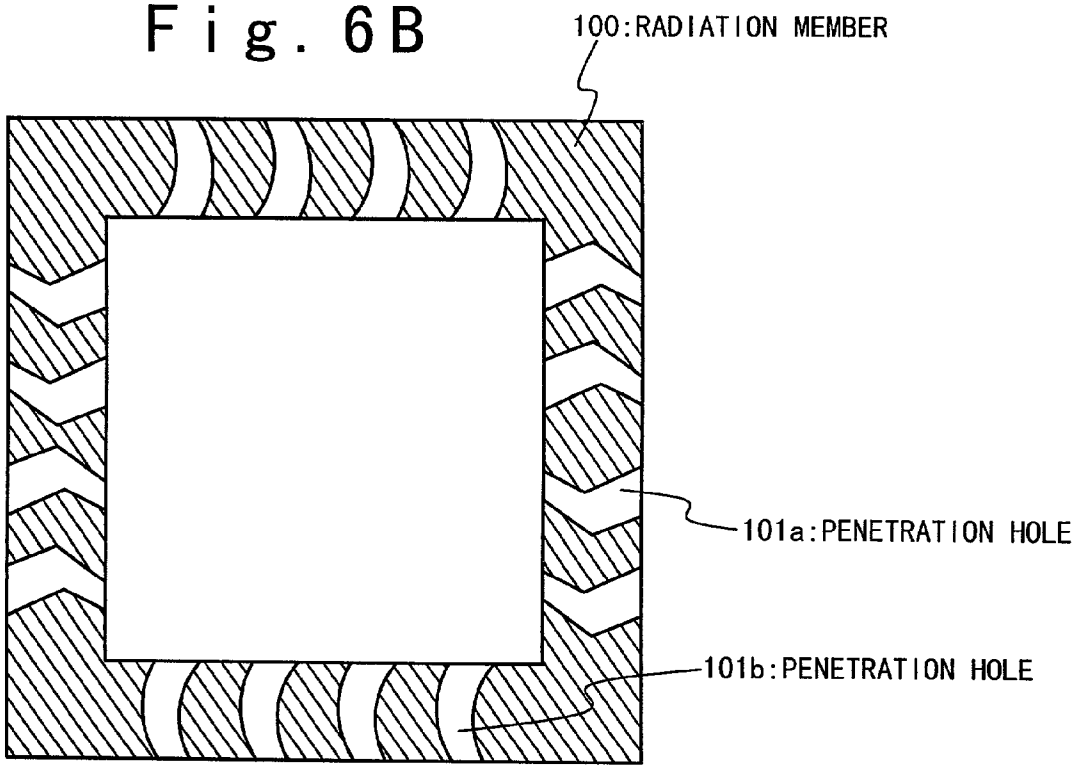
100:RADIATION MEMBER
101a:PENETRATION HOLE
101b:PENETRATION HOLE

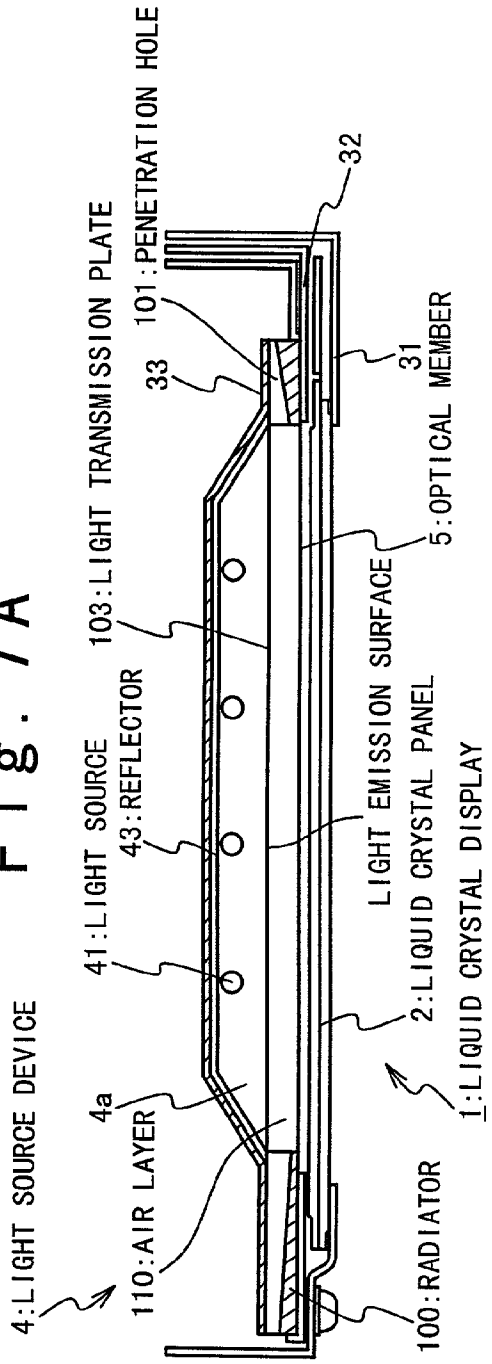
4:LIGHT SOURCE DEVICE
110:AIR LAYER
4a
41:LIGHT SOURCE
43:REFLECTOR
103:LIGHT TRANSMISSION PLATE
101:PENETRATION HOLE
33
32
31
5:OPTICAL MEMBER
LIGHT EMISSION SURFACE
2:LIQUID CRYSTAL PANEL
1:LIQUID CRYSTAL DISPLAY
100:RADIATOR

Fig. 7A

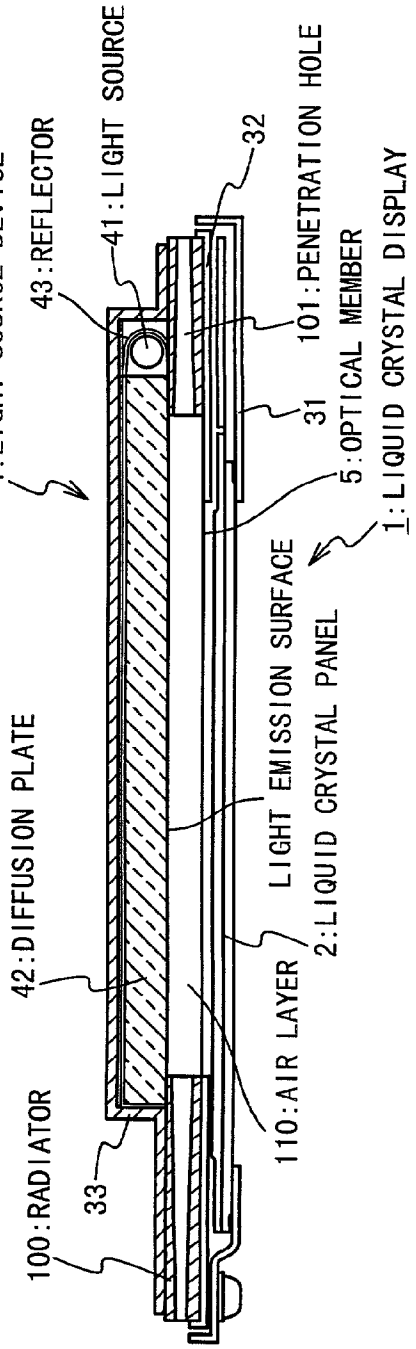
4:LIGHT SOURCE DEVICE
42:DIFFUSION PLATE
43:REFLECTOR
41:LIGHT SOURCE
32
101:PENETRATION HOLE
31
5:OPTICAL MEMBER
1:LIQUID CRYSTAL DISPLAY
LIGHT EMISSION SURFACE
2:LIQUID CRYSTAL PANEL
110:AIR LAYER
33
100:RADIATOR

Fig. 7B

Fig. 7C

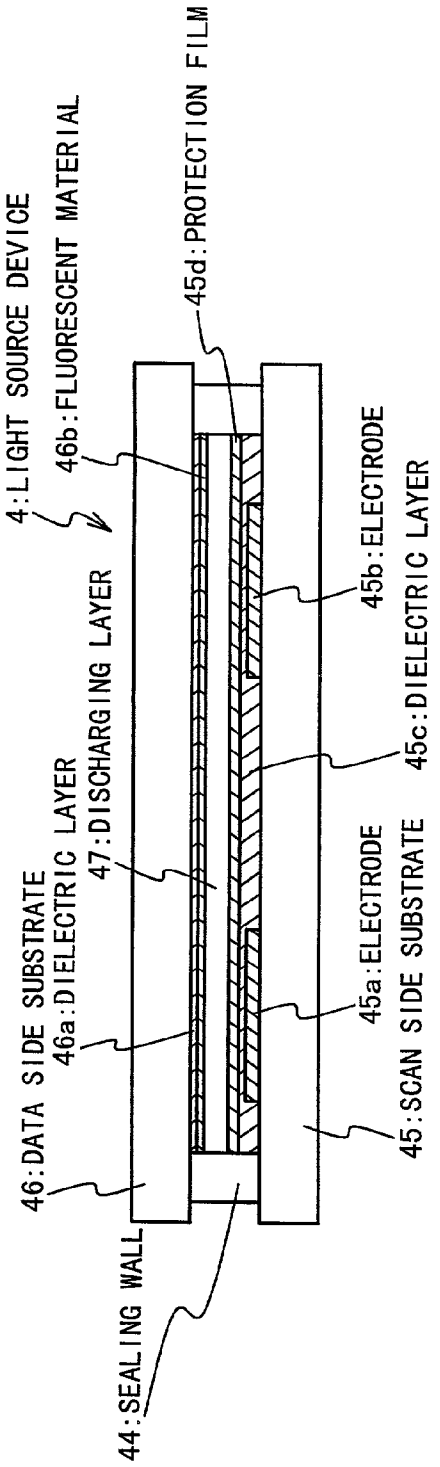
4:LIGHT SOURCE DEVICE
46b:FLUORESCENT MATERIAL
45d:PROTECTION FILM
45b:ELECTRODE
45c:DIELECTRIC LAYER
45a:ELECTRODE
45:SCAN SIDE SUBSTRATE
47:DISCHARGING LAYER
46a:DIELECTRIC LAYER
46:DATA SIDE SUBSTRATE
44:SEALING WALL

Fig. 7D

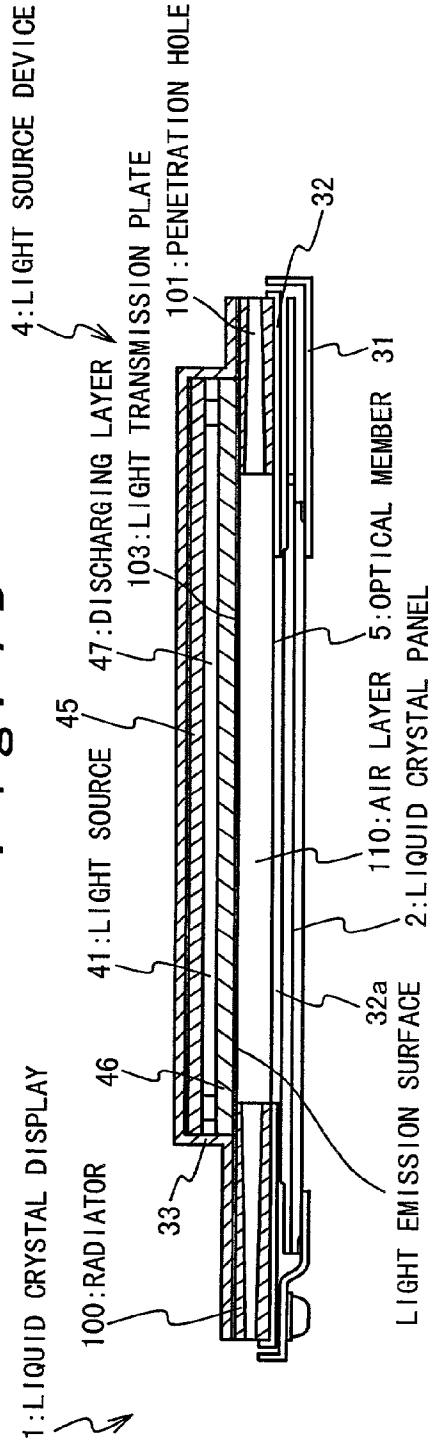
4:LIGHT SOURCE DEVICE
101:PENETRATION HOLE
32
31
47:DISCHARGING LAYER
103:LIGHT TRANSMISSION PLATE
45
5:OPTICAL MEMBER
110:AIR LAYER
2:LIQUID CRYSTAL PANEL
41:LIGHT SOURCE
32a
46
LIGHT EMISSION SURFACE
33
100:RADIATOR
1:LIQUID CRYSTAL DISPLAY

Fig. 8A

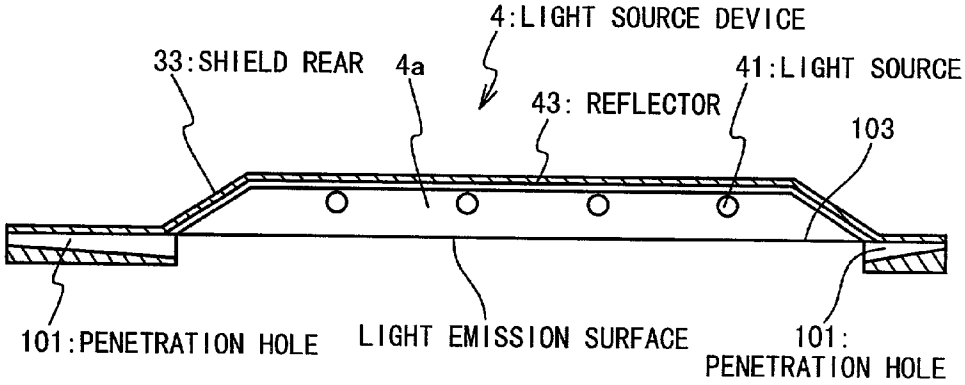

Fig. 8B

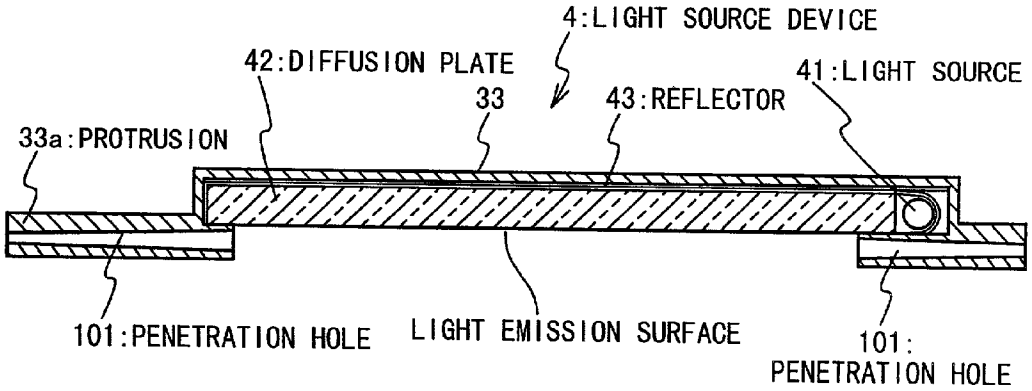

Fig. 8C

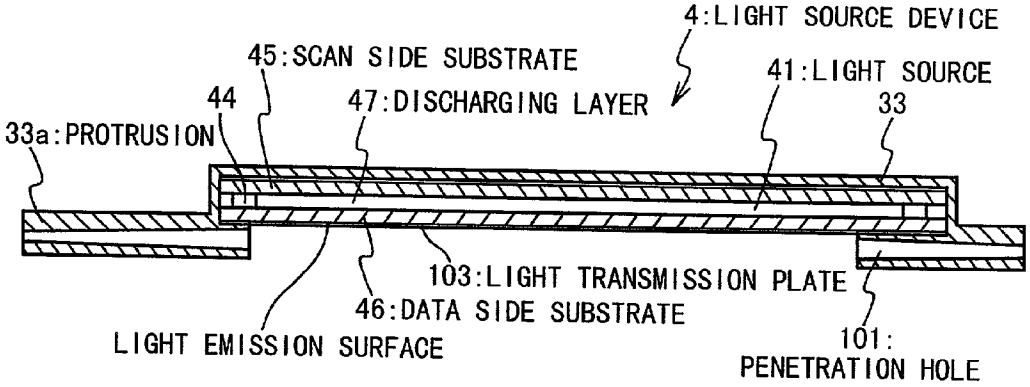

Fig. 9A

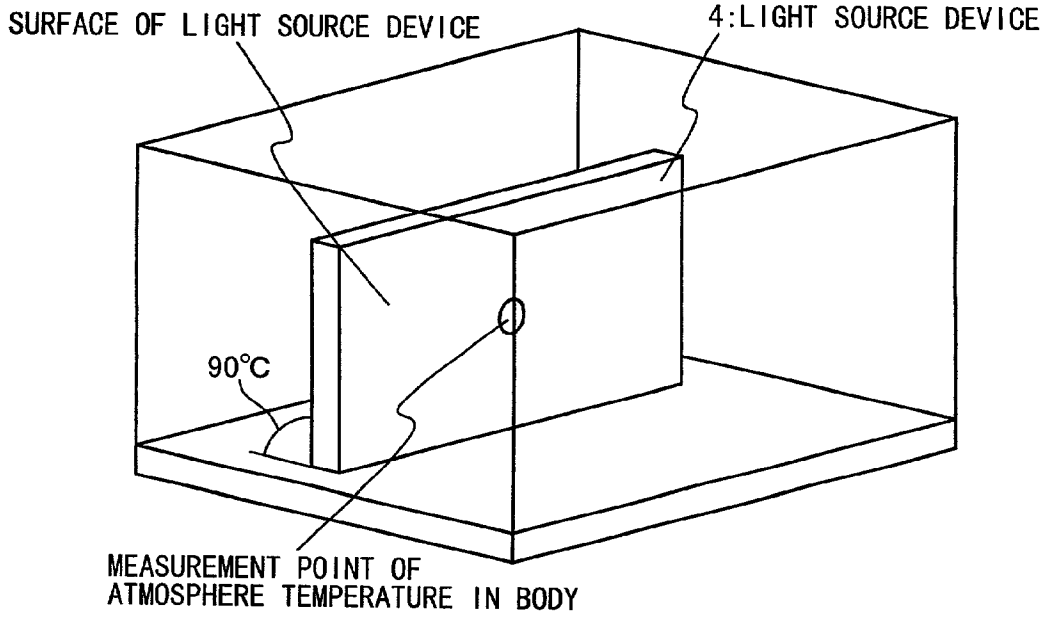
SURFACE OF LIGHT SOURCE DEVICE
4:LIGHT SOURCE DEVICE
90°C
MEASUREMENT POINT OF
ATMOSPHERE TEMPERATURE IN BODY

Fig. 9B

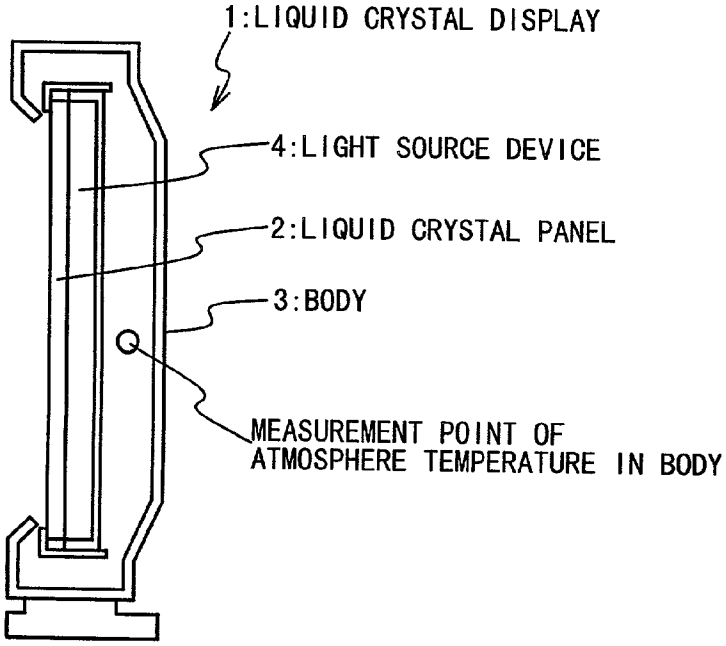
1:LIQUID CRYSTAL DISPLAY
4:LIGHT SOURCE DEVICE
2:LIQUID CRYSTAL PANEL
3:BODY
MEASUREMENT POINT OF
ATMOSPHERE TEMPERATURE IN BODY

Fig. 10

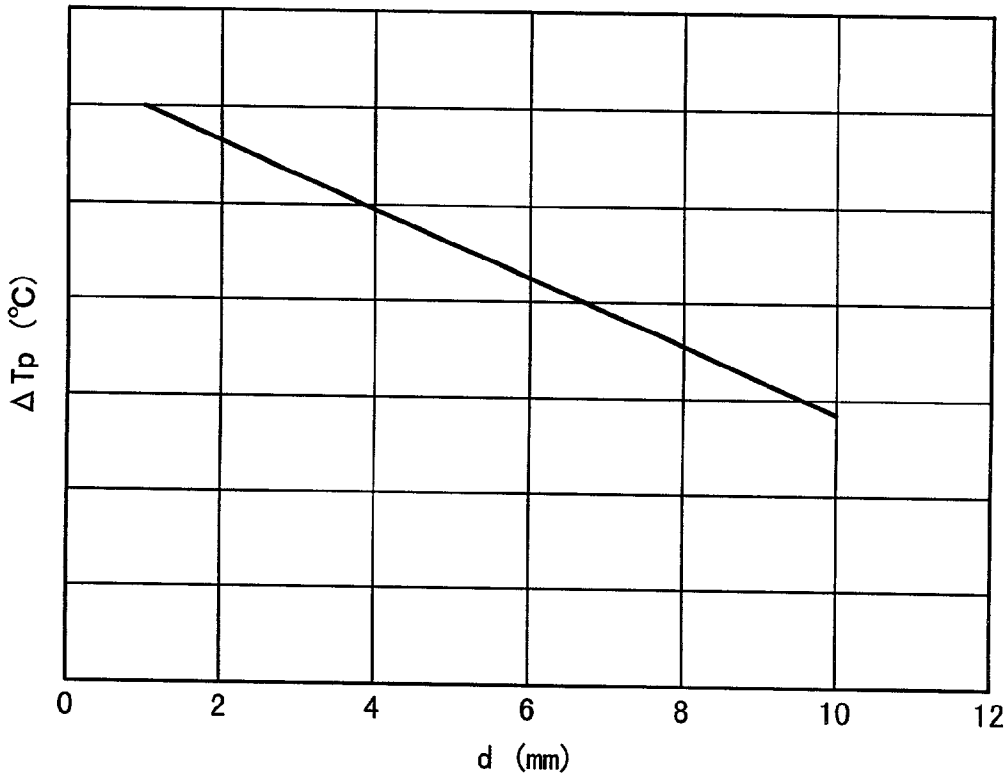

LIQUID CRYSTAL DISPLAY AND LIGHT SOURCE DEVICE USED FOR THE SAME

BACKGROUND OF THE INVENTION

[0001] 1. Field of the Invention

[0002] The present invention relates to a liquid crystal display having a structure for preventing temperature rises of a liquid crystal panel and an optical member, and a light source device used for the same.

[0003] 2. Description of the Related Art

[0004] In recent years, as a size of a liquid crystal display has been made larger, a desire has been strong for a liquid crystal display having a high brightness and a widely visible angle. In order to attain the liquid crystal display having the high brightness, it is tried to increase a transmittivity of the liquid crystal panel and improve light usage efficiency. However, since they have limits, an approach of increasing a brightness of a back-light, namely a light source is typically tried.

[0005] Also, with regard to the attainment of the widely visible angle, there may be a case that the transmittivity of the liquid crystal panel is sacrificed. In order to compensate this demerit, it is effective to employ a technique for increasing the brightness of the light source.

[0006] Thus, the attainment of the higher brightness of the light source gives the sufficient effect to the high brightness and the widely visible angle of the liquid crystal display.

[0007] However, as mentioned above, the increase in the brightness of the light source requires an increase in an input power to a light source device. When an attention is paid to the light emission mechanism of the light source, it is typically known that several tens of percents of energy supplied to the light source device are lost as heat. That is, associated with the increase in the input power to the light source, the heat loss is increased, and a calorific value of the light source is increased.

[0008] As the calorific value of the light source is increased, a temperature of a liquid crystal panel mounted near the light source device is also raised. Since this liquid crystal panel depends on a temperature characteristic of itself, there may be a fear of a drop in a display quality as the liquid crystal display. Thus, such a liquid crystal display is desired that can attain the high brightness without any drop in the display quality of the liquid crystal panel.

[0009] For solving such a problem, a structure is employed in which a fan or a heat sink is mounted on a rear of a body of the liquid crystal display.

[0010] A conventional liquid crystal display and a light source device used for the same will be described below with reference to the attached drawings.

[0011] **FIG. 1A** is a perspective view showing a configuration of a conventional liquid crystal display. As shown in **FIG. 1A, a** liquid crystal display **1** is composed of a body **3** in which a liquid crystal panel **2**, a light source device (not shown) and the like are built in, a radiator **7** mounted on a rear of the body **3**, and a substrate part **8**.

[0012] An opening portion **31***a* is positioned on a shield front **31** constituting a surface side of the body **3**. A part of a surface of the liquid crystal panel **2** is exposed in the opening portion **31***a*, and the exposed portion forms a display surface of the liquid crystal display **1**.

[0013] Also, the radiator **7** is directly mounted in a shield rear (not shown) constituting the rear side of the body **3**. As the material for this shield rear, aluminum having high heat conduction and a lightweight are used in many cases.

[0014] In this way, the heat radiated from the light source device is released through the shield rear having the high heat radiate-ability to external portion.

[0015] Here, the surface of the liquid crystal panel **2** implies the display surface of the liquid crystal panel **2**. Hereinafter, with regard to the description of surfaces besides the liquid crystal panel **2**, a plane positioned in a direction similar to the surface of the liquid crystal panel **2** is noted as a surface, and a plane on a rear of the surface is noted as a rear.

[0016] The inner structure of the liquid crystal display will be described below with reference to **FIG. 1B** showing a section taken on the line A-A' of **FIG. 1A**. As shown in **FIG. 1**B, in the liquid crystal display **1**, the liquid crystal panel **2** having a form of substantial plate, an optical member **5** such as a diffusion plate or the like, and a light source device **4** are substantially parallel and opposite to each other. The liquid crystal panel **2** is put between a shield front **31** and a shield center **32**. The optical member **5** and the light source device **4** are put between the shield center **32** and a shield rear **33**. Also, the radiator **7** and the substrate part **8** are mounted on the rear of the shield rear **33**.

[0017] The structure of the light source device will be described below with reference to **FIGS. 2A and 2B**. As the structure of the light source device **4**, there are mainly a straight fall type structure and a side light type structure. **FIG. 2A** is a section view showing a liquid crystal display having a light source device of the straight fall type structure, and **FIG. 2B** is a section view showing a liquid crystal display having a light source device of the side light type structure.

[0018] As shown in **FIG. 2**A, in the light source device **4** having the straight fall type structure, a reflector **43** is mounted inside a substantially dished portion (hereafter, referred to as "lamp house") of the shield rear **33**. Near a reflector **43**, a plurality of light sources **41** are mounted along the reflector **43** in parallel. Each of the plurality of the light sources **41** is cylindrical in shape. Also, the optical member **5**, such as a diffusion plate or the like, is mounted on a light emission side of the light source device **4** having the straight fall type structure so as to cover the lamp house by keeping a predetermined distance from the light source **41**, in order to avoid an occurrence of irregular brightness.

[0019] As shown in **FIG. 2**B, the light source device **4** having the side light type structure is composed of a light guide plate **42** having a form of substantial plate, a light source **41** that is mounted on one side of the light guide plate **42** and is cylindrical in shape, and a reflector **43** mounted so as to surround the light source **41** together with one side of the light guide plate **42**.

[0020] The light guide plate **42** is made of acrylic having a high light transmittivity and the like. A light from the light source **41** is transmitted through the light guide plate **42**, and

radiated to the rear of the liquid crystal panel **2** from a region of an opening portion **32***a* of the shield center **32**, in the surface of the light guide plate **42**. Also, the gradation process in which a dot for adjusting the irregular brightness and the like are printed is performed on a plane opposite to a light emission surface in the light guide plate **42**, namely, the rear of the light guide plate **42** opposite to the shield rear **33** through the reflector **43**.

[**0021**] As the radiation structure of the conventional liquid crystal display, Japanese Laid Open Patent Application (JP-A-Showa, 61-172181) discloses a technique for radiating heat in a light source device by forming a ventilation port in a lamp house and sending air to the ventilation port, in a liquid crystal display having a light source device of a straight fall type structure.

[**0022**] Concretely, as shown in **FIG. 3, a** lamp house **4***a* is formed in a light source device **4** mounted on a rear side of a printed circuit board **34** equipping a liquid crystal panel **2**. A light source **41** cylindrical in shape is mounted in this lamp house **4***a*. Also, ventilation ports **44** are formed on an upper side and a lower side of the lamp house **41**.

[**0023**] **FIG. 4** is a section view when the light source device **4** shown in **FIG. 3** is applied to the liquid crystal display. As shown in **FIG. 4**, an optical member (diffusion plate) **5** is mounted so as to cover the lamp house **4***a*, and the liquid crystal panel **2** is mounted so as to be opposite to the light source **41** through the optical member **5**.

[**0024**] As described above, it is obvious that if a brightness of a display surface in the liquid crystal display is improved, a heat radiation caused by the improvement of the brightness is induced from the light source device to the liquid crystal panel. Thus, an amount of the heat radiation from the light source device to the liquid crystal panel is set in such a range that the amount is equal to or greater than a level which does not drop the brightness of the conventional liquid crystal panel and equal to or less than a level which does not extremely drop a display function.

[**0025**] However, in the heat radiation structure of the liquid crystal display in which the radiator member is mounted on the rear of the body, there are only rooms for the improvement of the heat radiation, such as the employment of the material having the high heat conduction as the material constituting the body and the radiator member, or the increase of the surface area of the radiation member.

[**0026**] In the light source device having the straight fall type structure, especially in the above-mentioned light source device disclosed in Japanese Laid Open Patent Application (JP-A-Showa, 61-172181), penetration holes are formed in the lamp house so that the light source is directly cooled by the air flowing through the penetration holes. That is, the heat of the light source is positively escaped to external portion.

[**0027**] However, a brightness of a light source, such as a cold cathode tube or the like, is changed depending on a temperature. Its brightness is low at a room temperature (about 25° C.). A high brightness can be obtained at a condition that it is heated up to about 40-odd ° C.

[**0028**] Here, as disclosed in the Japanese Laid Open Patent Application (JP-A-Showa, 61-172181), if a size of the ventilation hole is made larger in order to improve the heat radiation efficiency, the temperature of the light source is excessively dropped, which may result in a drop in the brightness. Also, there may be a fear that a temperature rise time is made longer from a room temperature (at a time when the light source is turned on) to a suitable temperature (a maximum brightness).

[**0029**] Thus, the heat radiation efficiency must be reduced such that the temperature of the light source is not dropped beyond the necessity. As a result, the temperature of the liquid crystal panel rises. This results in the drop in the brightness of the liquid crystal panel.

[**0030**] As the related technique, Japanese Laid Open Patent Application (JP-A-Heisei, 8-184827) discloses an illuminating apparatus and a liquid crystal display using the same each of which includes an infrared ray reflection layer that is positioned so as to cover a light source and transmits a light from the light source from which an infrared ray is removed, and a fan apparatus for generating an air flow on a light transmission side of the infrared ray reflection layer and suppressing a heat conduction from the light source.

[**0031**] Japanese Laid Open Patent Application (JP-A-Heisei, 9-160010) discloses a liquid crystal display in which two light diffusion plates positioned separately from each other are mounted between a transmission type liquid crystal display and a bulb, and a portion between the two light diffusion plates is used as an adiabatic air layer.

[**0032**] Japanese Laid Open Patent Application (JP-A-Heisei, 10-96898) discloses a liquid crystal display in which a hollow ventilation member is mounted on an upper surface side and a lower surface side of a body of a back-light, and a fan is mounted near an end of the ventilation member.

[**0033**] Also, Japanese Laid Open Patent Application (JP-A-Heisei, 11-119216) discloses a liquid crystal display having a liquid crystal module in which a light source for emitting a back-light is mounted on a rear side of a liquid crystal panel. In this liquid crystal display, a heat radiation plate is mounted opposite to a substantially entire surface of a rear of the liquid crystal module and is also in contact with a vicinity of a portion opposite to the light source on the rear of the liquid crystal module.

[**0034**] Moreover, Japanese Laid Open Patent Application (JP-A-Heisei, 11-160688) discloses a liquid crystal display in which a liquid crystal panel is mounted within a housing, and a support member is formed on a base frame side for accommodating therein a back-light, and in order that this support member supports the liquid crystal panel on an inner surface side of the housing, a panel support surface of the support member has a plurality of protrusions so that it is in discontinuous contact with the liquid crystal panel.

SUMMARY OF THE INVENTION

[**0035**] The present invention is made for solving the above-mentioned problems. Therefore, an object of the present invention is to provide a liquid crystal display that protects a heat accumulation in a liquid crystal panel without any drop of brightness, and a light source device used in the liquid crystal display.

[**0036**] In order to attain this object, in a liquid crystal display according to a first aspect of the present invention, a light emission surface having a substantially single surface

in a light source device is opposite to a rear of a liquid crystal panel or a rear of an optical member through an air layer formed by a spacing member.

[0037] Due to this configuration, the rears of the liquid crystal panel and the optical member, such as a diffusion plate and the like is not directly radiated the heat generated from the light source device. Thus, it is possible to prevent in advance the drops in the functions of the optical member and the liquid crystal panel. Especially, in the liquid crystal display using the light source device having the straight fall type structure, a light transmission plate is mounted opposite to the rear of the optical member, and it constitutes a light emission surface of a plane light source, and thereby a lamp house is sealed.

[0038] The object of the present invention is to increase a brightness of the light source and a brightness of the liquid crystal panel. Thus, it is necessary to carry out a control so that in order to increase the brightness of the light source, the light source is not cooled beyond the necessity, and a temperature of the liquid crystal panel is not raised by the heat from the light source. That is, the light source is shielded from the air layer by the light emission surface, and it is not directly cooled. Thus, the air layer directly cools the liquid crystal panel.

[0039] The above-mentioned configuration can control the temperature of the light source and the temperature of the liquid crystal panel so as to increase the brightness of the liquid crystal display and improve the maintenance of a display quality.

[0040] Under the object similar to the above object, a liquid crystal display according to the first aspect of the present invention may be comprised such that a light source device is mounted opposite to a light emission target through a diffusion plate. In this liquid crystal display, an air layer is mounted between the light source device and the diffusion plate, and a light emission surface having a substantially single surface is mounted on a light emission target side of the light source device.

[0041] Due to this configuration, the light source device has the light emission surface, and the air layer formed by the spacing member is formed between the light emission surface and the optical member. Thus, the radiation heat of the light source device is not directly emitted from the light source device to the optical member or the liquid crystal panel. Thereby, the radiation heat is suppressed by the air layer. Hence, it is possible to prevent in advance the drops in the functions of the liquid crystal panel and the optical member.

[0042] In the liquid crystal display according to the first aspect of the present invention, the air layer can be configured such that the heat radiation member as a spacing member is put between the light emission surface of the light source device and the diffusion plate.

[0043] Due to this configuration, the opening portion of the heat radiation member, the light emission surface of the light source device and the rear surface of the optical member constitute the air layer. This air layer suppresses the heat radiation from the light source device to the liquid crystal panel or the optical member. Also, even if a calorific value is increased in conjunction with a larger size of a light source device, a capacity of the air layer can be made larger in conjunction with the increase.

[0044] The liquid crystal display according to the first aspect of the present invention can be designed such that the light source device has a light emission surface having a predetermined transmittivity on a light emission side of the light source device having a straight fall type constructor.

[0045] Due to this configuration, the light emission surface serves as a part constituting the air layer. A distance between the light source and the optical member (diffusion plate) can be reserved to thereby suppress the irregular brightness. Here, the predetermined transmittivity can be a transmittivity at which a light quantity of the light source is not extremely lost and the light emission surface itself does not have the function of the optical member such as the diffusion plate and the like.

[0046] In the liquid crystal display according to the first aspect of the present invention, the light source device can be constituted by a light source device having a side light type structure.

[0047] The liquid crystal display according to the first aspect of the present invention can be designed such that one or more penetration holes penetrating an inner circumference surface and an outer circumference surface are positioned in the heat radiation member.

[0048] Due to this configuration, the air flows through the air layer so that the air layer can be effectively cooled. Thus, it is possible to effectively radiate the heat accumulated in the air layer caused by the radiation heat from the light source device. Hence, the liquid crystal display can be properly operated.

[0049] The liquid crystal display according to the first aspect of the present invention can be designed such that the shape of the penetration hole is tapered. Due to this configuration, convection can be easily generated in the air layer so that the heat radiation can be performed further easily in the air layer.

[0050] The liquid crystal display according to the first aspect of the present invention can be designed such that the shape of the penetration hole is set in accordance with the flow route of the air. Due to this configuration, the shape of the penetration hole suitable for the easy inflow and outflow (convection) in the air layer is determined based on the direction in which the liquid crystal display is mounted. For example, the shapes of the penetration holes to be formed on upper and lower surfaces and right and left surfaces of the heat radiation member are respectively determined so as to enable the easy convection. Thus, the further effective heat radiation can be performed in the air layer.

[0051] The liquid crystal display according to the first aspect of the present invention can be designed such that one or more grooves penetrating an inner circumference surface and an outer circumference surface are formed in the heat radiation member.

[0052] Due to this configuration, the groove and the light emission surface of the light source device, or the groove and the rear of the optical member constitute the penetration hole. Accordingly, the heat radiation structure is configured for making the air flow into or flow out from the air layer.

[0053] The liquid crystal display according to the first aspect of the present invention can be designed such that the shape of the groove is tapered. Due to this configuration, the convection can be easily generated in the air layer so that the further effective heat radiation can be performed in the air layer.

[0054] The liquid crystal display according to the first aspect of the present invention can be designed such that the shape of the groove is determined in accordance with the flow route of the air. Due to this configuration, the shape of the penetration hole suitable for the easy inflow and outflow (convection) in the air layer is determined in accordance with the direction in which the liquid crystal display is mounted. For example, the shapes of the penetration holes to be formed on upper and lower surfaces and right and left surfaces of the heat radiation member are respectively determined so as to enable the easy convection. Thus, the further effective heat radiation can be performed in the air layer.

[0055] The liquid crystal display according to the first aspect of the present invention can be designed such that the heat radiation member and the light source device are molded and integrated into a single unit. Due to this configuration, the number of parts as well as the number of assembling processes can be reduced to consequently reduce a manufacturing cost of the liquid crystal display.

[0056] Also, under the object similar to the above object, a light source device according to a second aspect of the present invention is designed such that a protrusion is positioned at a circumference edge of a light emission surface, and one or more penetration holes penetrating an inner circumference surface and an outer circumference surface are positioned in such a protrusion. Due to this configuration, an inner surface of the protrusion, a light emission surface of a light source device and an optical member constitute an air layer, and a penetration hole through which air can flow into or flow out from such the air layer can cool the air layer heated by the light source device.

[0057] The light source device according to the second aspect of the present invention can be designed such that the shape of the penetration hole is tapered. Due to this configuration, the convection can be easily generated in the air layer so that the further effective heat radiation can be done in the air layer.

[0058] The light source device according to the second aspect of the present invention can be designed such that the shape of the penetration hole is set in accordance with the flow route of the air. Due to this configuration, the shape of the penetration hole suitable for the easy inflow and outflow (convection) in the air layer is determined in accordance with the direction in which the liquid crystal display is mounted. For example, the shapes of the penetration holes to be formed on upper and lower surfaces and right and left surfaces of the heat radiation member are respectively determined so as to enable the easy convection. Thus, the further effective heat radiation can be performed in the air layer.

[0059] Also, under the object similar to the above object, a light source device according to a third aspect of the present invention is designed such that a protrusion is positioned at a circumference edge of a light emission surface, and one or more grooves penetrating an inner circumference surface and an outer circumference surface are positioned in this protrusion.

[0060] Due to this configuration, the groove and the light emission surface of the light source device, or the groove and a rear surface of an optical member constitute a penetration hole. Accordingly, the heat radiation structure is configured for making the air flow into or flow out from the air layer. Thus, the air flows into or flows out from the thus-formed penetration hole, and the heat is radiated from the air layer heated by the light source device. Hence, it is possible to protect the heat accumulation in the optical member and the liquid crystal panel.

[0061] The light source device according to the third aspect of the present invention can be designed such that the shape of the groove is tapered. Due to this configuration, the convection can be easily generated in the air layer so that the further effective heat radiation can be done in the air layer.

[0062] The light source device according to the third aspect of the present invention can be designed such that the shape of the groove is set in accordance with the flow route of the air. Due to this configuration, the shape of the penetration hole suitable for the easy inflow and outflow (convection) in the air layer is determined in accordance with the direction in which the liquid crystal display is mounted. For example, the shapes of the penetration holes to be formed on upper and lower surfaces and right and left surfaces of the heat radiation member are respectively determined so as to enable the easy convection. Thus, the further effective heat radiation can be performed in the air layer.

BRIEF DESCRIPTION OF THE DRAWINGS

[0063] **FIG. 1A** is a perspective view showing a configuration of a conventional liquid crystal display;

[0064] **FIG. 1B** is a section view showing a configuration of a conventional liquid crystal display:

[0065] **FIG. 2A** is a section view showing a configuration of a conventional liquid crystal display having a light source device of a straight fall type structure;

[0066] **FIG. 2B** is a section view showing a configuration of a conventional liquid crystal display having a light source device of a side light type structure;

[0067] **FIG. 3** is a perspective view showing a configuration of a conventional liquid crystal display;

[0068] **FIG. 4** is a section view showing a configuration of a conventional liquid crystal display;

[0069] **FIG. 5A** is a section view showing a configuration of a liquid crystal display according to a first embodiment of the present invention;

[0070] **FIG. 5B** is a perspective view showing a heat radiation member used in the liquid crystal display according to the first embodiment of the present invention;

[0071] **FIG. 6A** is a section view showing a structure of a heat radiation member used in a liquid crystal display according to the first embodiment of the present invention;

[0072] **FIG. 6B** is a section view showing a structure of another heat radiation member used in a liquid crystal display according to the first embodiment of the present invention;

[0073] **FIG. 7A** is a section view showing a structure of a liquid crystal display using a light source device having a straight fall type structure according to the first embodiment of the present invention;

[0074] **FIG. 7B** is a section view showing a structure of a liquid crystal display using a light source device having a side light type structure according to the first embodiment of the present invention;

[0075] **FIG. 7C** is a section view showing a structure of a liquid crystal display using a plane light source device according to the first embodiment of the present invention;

[0076] **FIG. 7D** is a section view showing a structure of a liquid crystal display having another plane light source device according to the first embodiment of the present invention;

[0077] **FIG. 8A** is a section view showing a structure of a light source device having a straight fall type structure used in a liquid crystal display according to a second embodiment of the present invention;

[0078] **FIG. 8B** is a section view showing a structure of a light source device having a side light type structure used in a liquid crystal display according to the second embodiment of the present invention;

[0079] **FIG. 8C** is a section view showing a structure of a plane light source device used in the liquid crystal display according to the second embodiment of the present invention;

[0080] **FIGS. 9A and 9B** are views describing an example of a liquid crystal display according to the embodiments of the present invention; and

[0081] **FIG. 10** is a graph showing a relation between a temperature rise with respect to an atmosphere temperature and a distance between a liquid crystal panel and a light emission surface of a light source device in the example of a liquid crystal display according to the embodiments of the present invention.

DESCRIPTION OF THE PREFERRED EMBODIMENTS

[0082] Now, the configurations of a liquid crystal display according to embodiments of the present invention and a light source device used in the same will be described below with reference to the attached drawings.

[0083] (First Embodiment)

[0084] **FIGS. 5A** is a section view showing the configuration of the liquid crystal display according to a first embodiment of the present invention. **FIG. 5B** is a perspective view showing a heat radiation member used in the liquid crystal display according to the first embodiment of the present invention.

[0085] As shown in **FIG. 5A, a** liquid crystal display **1** according to the first embodiment of the present invention is comprises a shield front **31**, a shield center **32** and a shield rear **33** constituting a body of the liquid crystal display **1**, and a liquid crystal panel **2** and a light source device **4** which are built in them.

[0086] Each of the shield front **31** and the shield center **32** is frame-shaped and has an opening portion. Specifically, the liquid crystal panel **2** that is substantially-plate-shaped is put between the shield front **31** and the shield center **32**. Also, an optical member **5**, such as a diffusion plate and the like, a heat radiation member **100**, and the light source device **4** are put between the shield center **32** and the shield rear **33**. The light source device **4** is mounted through a reflector (not shown) on an inner surface (surface) of the shield rear **33**, and a substrate part **8** is mounted on an outer surface (rear) of the shield rear **33**.

[0087] Moreover, the heat radiation member **100** put between the optical member **5** and the light source device **4** is formed by frame-shaped body and has an opening portion. One or more penetration holes **101** penetrating an inner circumference surface **100***a* and an outer circumference surface **100***b* are formed. Thus, an air layer **110** constituted by the inner circumference surface **100***a* of the heat radiation member **100** and a surface (light emission surface) of the light source device **4** is linked to an external portion of the body through the penetration holes **101**.

[0088] Here, the inner circumference surface **100***a* of the heat radiation member **100** implies a surface on which an opening portion of the heat radiation member **100** is formed in a thickness direction, and the outer circumference surface **100***b* of the heat radiation member **100** implies a surface on which the outer circumference of the heat radiation member **100** is formed opposite to the inner circumference surface **100***a*. That is, when the heat radiation member **100** is mounted in the liquid crystal display **1**, the side in contact with the optical member **5** and the shield center **32** is referred to as the surface, and the side in contact with the surface (light emission surface) of the light source device **4** and the shield rear **33** is referred to as the rear.

[0089] The structure of the heat radiation member **100** will be described below with reference to **FIG. 5B**.

[0090] As shown in **FIG. 5**B, the heat radiation member **100** is substantially-frame-shaped and has the opening portion. The penetration holes **101** penetrating the inner circumference surface **100***a* and the outer circumference surface **100***b* are formed in the heat radiation member **100**.

[0091] Furthermore, grooves **102** for linking the inner circumference surface **100***a* and the outer circumference surface **100***b* to each other might be formed in the heat radiation member **100**. In this configuration, penetration holes are formed by the grooves **102** and the shield rear **33** when the heat radiation member **100** is mounted in the liquid crystal display **1**.

[0092] Each of the penetration holes **101** or each of the grooves **102** is tapered, and the directions in which the tapered shapes are formed are respectively determined. In detail, the directions in which the penetration holes **101** and the grooves **102** are formed are determined in order to create an air convection denoted by a bold arrow, in accordance with the positions of the grooves **102**, the penetration holes **101** and the liquid crystal display **1**.

[0093] The shapes of the penetration holes **101** and the grooves **102** will be described below with reference to **FIGS. 6A and 6B** showing the section view taken by cutting the heat radiation member **100** along a line B-B' of **FIG. 5B**.

[0094] As shown in **FIG. 6A, a** plurality of penetration holes **101** tapered so as to penetrate the inner circumference

surface **100***a* and the outer circumference surface **100***b* are formed in the heat radiation member **100**. In each of the penetration holes **101**, the tapered formation direction is determined depending on a position of the penetration hole.

[**0095**] For example, if a direction of setting the liquid crystal display is determined, in the penetration hole **101** penetrating the inner circumference surface **100***b* and the outer circumference surface **100***a* at the lower portion of the heat radiation member **100**, a diameter of a hole formed in the outer circumference surface **100***b* is set to be greater than a diameter of a hole formed in the inner circumference surface **100***a*. Similarly, in the penetration hole **101** penetrating the outer circumference surface **100***b* and the inner circumference surface **100***a* at the upper portion of the heat radiation member **100**, a diameter of a hole formed in the outer circumference surface **100***b* is set to be smaller than a diameter of a hole formed in the inner circumference surface **100***a*.

[**0096**] That is, the penetration holes **101** and the grooves **102** formed in an upper half portion of a side portion of the heat radiation member **100** and the penetration holes **101** and the grooves **102** formed in a lower half portion of the side portion of the heat radiation member **100** are different from each other in the tapered formation direction.

[**0097**] In other word, the penetration holes **101** and the grooves **102** formed in the heat radiation member **100** are formed such that the air convection is generated as denoted by the bold arrow of **FIG. 5B**. Also, it is desirable that taper angles θ of the penetration hole **101** and the groove **102** are **300**.

[**0098**] In the heat radiation member used in the liquid crystal display according to the first embodiment of the present invention, bent penetration holes **101***a* and curved penetration holes **101***b* may be formed as shown in **FIG. 6B**. The formation of the heat radiation member having the above-mentioned shape enables the optical loss to the external portion of the light source device to be reduced without any drop in the heat radiation efficiency.

[**0099**] A configuration of the light source device used in the liquid crystal display according to the first embodiment of the present invention will be described below with reference to the drawings.

[**0100**] **FIG. 7A** is a section view showing a structure of the liquid crystal display **1** using the light source device having a straight fall type structure, according to the first embodiment of the present invention. As shown in **FIG. 7**A, the light source device **4** having the straight fall type structure is employed as the light source device opposite to the rear of the optical member **5**, such as a diffusion plate and the like, through the air layer **110**.

[**0101**] A light transmission plate **103** serving as an emission surface opposite to the rear of the optical member **5** is mounted in the light source device **4** so as to cover the lamp house **4***a*. The light transmission plate **103** does not have a diffusion function of the light from a light source **41**. It is mounted so as to use the lamp house **4***a* as a closed space. So, it may be a device for sufficiently transmitting the light from the light source **41**.

[**0102**] That is, the air layer **110** is formed since the light transmission plate **103** seals the lamp house **4***a* and further the heat radiation member **100** having the penetration holes **101** is put between the shield center **32** and the shield rear **33**.

[**0103**] Thus, the inflow of the air resulting from the formation of the penetration holes **101** and the air layer **110** is generated in the penetration holes **101** and the air layer **110**. This generation of the inflow can prevent the temperature rises in the optical member **5** and the liquid crystal panel **2** caused by the heat generated from the light source **41**.

[**0104**] Also, the distance between the optical member **5** and the light source **41** mounted within the lamp house **4***a* is sufficiently reserved, which can reduce the occurrence of the irregular brightness that may be easily induced in using the light source device having the straight fall type structure.

[**0105**] **FIG. 7B** is a section view showing a liquid crystal display using a light source device having a side light type structure, which is used in the liquid crystal display according to the first embodiment of the present invention. As shown in **FIG. 7B, a** light source device **4** having the side light type structure is employed as the light source device opposite to a rear of an optical member **5**, such as a diffusion plate and the like, through an air layer **110**. This light source device **4** includes a light guide plate **42**, a light source **41** mounted on one end surface of the light guide plate **42**, and a reflector **43** mounted so as to cover the light source **41**. The light source device **4** is put between a shield rear **33** and a heat radiation member **100** in which penetration holes **101** are formed.

[**0106**] Also, the heat radiation member **100** and the optical member **5** mounted on the surface side of the heat radiation member **100** are put between the shield rear **33** and the shield center **32**.

[**0107**] The heat radiation member **100** has a substantial-frame-shape and an opening portion. The air layer **110** is formed by the opening portion, the light guide plate **42** and the optical member **5**. The penetration hole **101** links the air layer **110** and the external portion to each other.

[**0108**] Moreover, on the surface side of the optical member **5**, the liquid crystal panel **2** is put between the shield center **32** and the shield front **31**. The shield front **31**, the shield center **32** and the shield rear **33** are fixed by using screws and the like, and constitute a liquid crystal display **1**.

[**0109**] Due to the above-mentioned configuration, the inflow of the air resulting from the formations of the penetration holes **101** and the air layer **110** is generated in the penetration holes **101** and the air layers **110**. This generation of the inflow can prevent the temperature rises in the liquid crystal panel **2** and the optical member **5** caused by the heat generated from the light source **41**.

[**0110**] Also, the gradation process in which the dot for adjusting the irregular brightness and the like are printed is performed on the light emission surface in the light guide plate **42**, namely, a surface opposite to the rear of the liquid crystal panel **2**.

[**0111**] The light source device used in the liquid crystal display according to the first embodiment of the present invention has a light emission surface of a substantially single surface. Thus, it is possible to use a light source device having a flat plane type of a light source (hereafter, referred to as a plane light source) in which two transparent

substrates are overlapped with each other through seal material and the like, and rare gas, mercury vapor or the like is filled in the sealed space constituted by them.

[0112] **FIG. 7C** is a section view showing the structure of such a plane light source device. As shown in **FIG. 7**C, in the light source device **4** according to the first embodiment of the present invention, two transparent substrates composed of a scan side substrate **45** and a data side substrate **46** are opposite to each other through a sealing wall **44**, such as a sealing material and the like, and one closed space is formed by the two transparent substrates and the sealing wall **44**. The scan side substrate **45** is made of glass and the like. A plurality of electrodes **45***a*, **45***b*, a dielectric layer **45***c* formed so as to cover them, and a protection film **45***d* formed on a surface of the dielectric layer **45***c* are formed on a surface of the scan side substrate **45**.

[0113] The data side substrate **46** is configured such that a dielectric layer **46***a* and a fluorescent material **46***b* are laminated on the rear thereof.

[0114] A closed discharging layer **47** is formed by calcining or sintering the scan side substrate **45** and the data side substrate **46** through the sealing wall **44**.

[0115] The rare gas, the mercury vapor or the like is filled in the discharging layer **47**. The discharging layer **47** carries out a function as the light source **41** by using the surface of the data side substrate **46** as the light emission surface when an electrical power is applied to the above-mentioned electrode **45***a*, **45***b*.

[0116] As the rear gas filled in the discharging layer **47**, xenon gas may be used. The xenon gas filled in a light source of a scanner, a facsimile, a copier and the like has a bolting point of 108.13° C. and a melting point of −111.8° C. Thus, there is no temperature dependence under a normal environment (a temperature range) of a usage of the liquid crystal display.

[0117] However, the mercury vapor filled in the cold cathode tube has a vapor pressure at an ordinal temperature. Also, the vapor pressure is changed in conjunction with a change of a temperature. That is, it has temperature dependence.

[0118] Thus, as shown in **FIG. 7**D, in the liquid crystal display **1** using the light source device **4** having the discharging layer **47** in which the mercury vapor is filled, it is desirable to insert the light transmission plate **103** as the adiabatic material between the light source **41** and the air layer **110**, similarly to the light source device **4** having the straight fall type structure.

[0119] The above-mentioned structure can protect the light source **41** from being excessively cooled. Also, it can suppress the temperature rise of the light emission target.

[0120] (Second embodiment)

[0121] In a liquid crystal display according to a second embodiment of the present invention, a light source device and a heat radiation member can be molded and integrated into a single unit.

[0122] **FIG. 8A** is a section view showing a light source device having a straight fall type structure used in a liquid crystal display according to the embodiment of the present invention.

[0123] As shown in **FIG. 8A, a** protrusion **33***a* protruding in a direction opposite to a formation direction of a lamp house **4***a* is formed in a region besides the lamp house **4***a* of a shield rear **33**. A penetration hole **101** is formed in the protrusion **33***a*. The penetration hole **101** is tapered such that its sectional area becomes smaller towards external portion. A plurality of light sources **41** are mounted in the lamp house **4***a* through a reflector **43**. Also, a light transmission plate **103** is mounted so as to cover the lamp house **4***a*.

[0124] The above-mentioned configuration enables the following function. That is, the light transmission plate **103**, the inner surface of the protrusion **33***a* and an optical member (not shown) of the liquid crystal display constitute an air layer, and air flows through the penetration hole **101** into the air layer.

[0125] **FIG. 8B** is a section view showing a structure having a light source device having a side light type structure used in the liquid crystal display according to the second embodiment of the present invention.

[0126] As shown in **FIG. 8B, a** protrusion **33***a* protruding in a direction in which a light guide plate **42** is mounted is formed at an edge portion of a shield rear **33** in which the light guide plate **42** is mounted in an inner surface through a reflector **43**. Also, a penetration hole **101** is formed in the protrusion **33***a*. The penetration hole **101** is tapered such that a sectional area becomes smaller towards external portion.

[0127] Moreover, the gradation process is performed on a plane opposite to a light emission surface in the light guide plate **42**, namely, a rear of the light guide plate **42** opposite to the shield rear **33** through a reflection plate **43**. The gradation process performed on the rear of the light guide plate **42** by printing the dot and the like carries out a function similar to that of a diffusion plate for adjusting the irregular brightness.

[0128] In addition, a light source **41** is mounted on one end surface of the light guide plate **42**. A reflector **43** is mounted so as to cover such a light source **41**.

[0129] The above-mentioned configuration enables the following function. That is, the light guide plate **42**, the inner surface of the protrusion **33***a* and an optical member (not shown) of the liquid crystal display constitute an air layer, and air flows through the penetration hole **101** into the air layer.

[0130] As the liquid crystal display according to the second embodiment of the present invention and the light source device used therein, the light source device has been described as the configuration including the shield rear that is a part of the body of the liquid crystal display. However, it is not limited to the above configuration if the light source device is composed of a single configuration.

[0131] **FIG. 8C** is a section view showing a structure of a plane light source device used in the liquid crystal display according to the second embodiment of the present invention.

[0132] As shown in **FIG. 8C, a** protrusion **33***a* protruding in a direction in which a plane light source **41** is mounted is formed at an edge portion of a shield rear **33** in which the plane light source **41** and a light transmission plate **103** are mounted in an inner surface. That is, it is formed such that

the plane light source **41** and the light transmission plate **103** are put between the shield rear **33** and the protrusion **33***a*.

[**0133**] The plane light source **41** is configured such that two transparent substrates composed of a scan side substrate **45** and a data side substrate **46** are opposite to each other through a sealing wall **44**, such as a sealing material and the like, and one closed space (a discharging layer **47**) is formed by the two transparent substrates and the sealing wall **44**. The discharging layer **47** carries out a function as the light source **41** by using the surface of the data side substrate **46** as the light emission surface when the rare gas, the mercury vapor or the like is filled in the discharging layer **47**, and an electrical power is applied to an electrode (not shown) formed in the scan electrode **45**.

[**0134**] As mentioned above, also in the case of the liquid crystal display according to the second embodiment of the present invention, its structure is different depending on whether the gas filled in the discharging layer **47** is the gas of temperature dependence or the gas of temperature independence.

[**0135**] That is, if the gas having the property of the temperature dependence is filled in the discharging layer **47**, it is necessary to put the light transmission plate **103** as the adiabatic material together with the plane light source **41** between the shield rear **33** and the protrusion **33***a*. However, if the gas having no temperature dependence is filled in the discharging layer, it may not be mounted except the purpose of properly keeping a distance between the plane light source **41** and the optical member **5** such as the diffusion plate and the like.

[**0136**] Also, a penetration hole **101** is formed in the protrusion **33***a*. The penetration hole **101** is tapered such that its sectional area becomes smaller towards external portion.

[**0137**] The above-mentioned configuration enables the following function. That is, the light transmission plate **103** or the light emission surface of the plane light source **41**, the inner surface of the protrusion **33***a* and an optical member (not shown) of the liquid crystal display constitute an air layer, and air flows through the penetration hole **101** into the air layer.

[**0138**] As the liquid crystal display according to the second embodiment of the present invention and the light source device used therein, the light source device has been described as the configuration including the shield rear that is a part of the body of the liquid crystal display. However, it is not limited the above configuration if the light source device is composed of a single configuration.

[**0139**] (Example)

[**0140**] As one example of the liquid crystal display according to the embodiments of the present invention, the configuration of the air layer formed in the liquid crystal display will be described below with reference to the attached drawings.

[**0141**] The air layer formed in the liquid crystal display according to the embodiments of the present invention is mounted in order to effectively radiate the heat generated from the light source device and thereby prevent the temperature rises in the liquid crystal panel and the optical member, such as the diffusion plate and the like.

[**0142**] That is, the air layer is a space mounted between the light emission surface of the light source device and the rear of the optical member. The heat radiation from the liquid crystal display can be effectively performed by properly holding a distance between the light emission surface of the light source device and the rear of the optical member.

[**0143**] Thus, the inventor carried out the experiments shown in **FIGS. 9A, 9B** and **FIG. 10**, with regard to the relation between the above distance and the temperature rise in the body of the liquid crystal display.

[**0144**] As shown in **FIG. 9**A, after the light source device is mounted in an acrylic case, the light source device is turned on. In this state, let us suppose that an atmosphere temperature at a condition when a temperature in the acrylic case is saturated is Ta, a temperature on a central portion of a light emission surface of the light source device at that time is Tp, and a temperature rise in the light source device to the atmosphere temperature in the acrylic case is ΔTp.

[**0145**] Above-mentioned condition is equal to the following condition substantively. That is, as shown in **FIG. 9**B, after the light source device is mounted in the body of the liquid crystal display, the light source device is turned on. In this state, let us suppose that an atmosphere temperature at a condition when the temperature in the body is saturated is Tb.

[**0146**] Here, if a light source device having ΔTp of 17° C. is used and a distance d (mm) between a light emission surface of the light source device and an optical member is assumed to be d=1, an allowable temperature rise value ΔTpmax of the light source device can be represent as follows:

ΔTpmax=(Allowable Temperature of Liquid Crystal Panel)−(Atmosphere Temperature in Body)−(Margin, Individual Sample Difference)

[**0147**] Typically, in the liquid crystal display, it is known that the atmosphere temperature in the body reaches about 35° C. in an actual usage state.

[**0148**] The liquid crystal panel is desired to be operated at 50° C. or less because its display function is dropped when its surface temperature becomes equal to or higher than a predetermined temperature.

[**0149**] Also, with regard to the optical member, it is known that its changing function and the like are dropped at a temperature equal to or higher than a predetermined temperature.

[**0150**] Thus, when the margin of the body, namely, the individual sample difference are set at 5° C. and it is applied to the above-mentioned equation, the following value is obtained:

$$\Delta Tpmax = 50^\circ\ C. - 35^\circ\ C. - 5^\circ\ C. = 10^\circ\ C.$$

[**0151**] Therefore, ΔTpmax needs to be set at 10° C. or less.

[**0152**] **FIG. 10** shows a graph of an actually measured result of ΔTp when the distance d between the light emission surface of the light source device and the optical member is varied. According to this graph, the equation of "ΔTpα−1.614d" is made obvious.

[0153] That is, if a light source device having ΔTp of 15° C. or more is used, the following equation can be used to determine the distance d between the light emission surface of the light source device and the optical member:

$$\Delta Tp-\Delta Tpmax=1.614\ (d-d0)$$

[0154] In order to satisfy this condition, when a light source device having ΔTp of 17° C. is used, distance d=4.33 . . . .

[0155] Thus, the influence caused by the heats from the light source device in the liquid crystal panel and the optical member can be sufficiently reduced by keeping the distance between the optical member and the light emission surface of the light source device at 4.3 mm or more.

[0156] Moreover, the liquid crystal display according to the second embodiment of the present invention and the light source device used therein can be diverted if it is the light source device having the straight fall type structure in which the light emission surface of the light source device is formed in the substantially single surface or it has the light emission surface opposite to the light emission target and the light emission surface is not the diffusion plate and the like.

[0157] As mentioned above, the heat from the light source device can be effectively radiated by the liquid crystal display according to the present invention and the light source device used in it to a degree that the functions of the liquid crystal panel and the optical member are not deteriorated.

[0158] Moreover, when the light source device having the straight fall type structure is used, the distance between the light source and the optical member, such as the diffusion plate and the like, can be sufficiently kept to thereby reduce the occurrence of the irregular brightness. Thus, the manufacturing cost and the number of assembling processes can be reduced by using the liquid crystal display according to the present invention and the light source device used therein.

What is claimed is:

1. A liquid crystal display comprising:

a light source device which has a flat light emission surface from which a light is emitted;

a liquid crystal panel which is arranged to be opposite to said light emission surface of said light source device; and

a spacing member which is formed between said light emission surface of said light source device and said liquid crystal panel to have a frame structure, and thermally separates said light source device and said liquid crystal panel.

2. The liquid crystal display according to claim 1, wherein said light source device has a straight fall type structure in which said light emission surface is composed of a light transmission plate having a predetermined transmittivity and is arranged on a light emission side of said light source device.

3. The liquid crystal display according to claim 2, wherein said spacing member is composed of a heat radiation member, and is put between said liquid crystal panel and said light transmission plate.

4. The liquid crystal display according to claim 3, wherein said heat radiation member has an opening portion in a center and a penetration hole which extends in a parallel to said light transmission plate to penetrate said heat radiation member.

5. The liquid crystal display according to claim 4, wherein a shape of said penetration hole is tapered.

6. The liquid crystal display according to claim 5, wherein the shape of said penetration hole is determined based on a flow route of air in a space formed by said heat radiation member.

7. The liquid crystal display according to claim 3, wherein said heat radiation member has an opening portion in a center and a groove which is formed to extend from opening portion to an outer circumference surface of said heat radiation member.

8. The liquid crystal display according to claim 7, wherein a shape of said groove is tapered.

9. The liquid crystal display according to claim 8, wherein the shape of said groove is determined based on a flow route of air in a space formed by said heat radiation member.

10. The liquid crystal display according to claim 3, wherein said heat radiation member and said light source device are integrated into a single unit.

11. The liquid crystal display according to claim 1, wherein said light source device has a side light type structure in which said light emission surface is composed of a light guide member through which a light is emitted.

12. The liquid crystal display according to claim 11, wherein said spacing member is composed of a heat radiation member, and is put between said liquid crystal panel and said light guide member.

13. The liquid crystal display according to claim 12, wherein said heat radiation member has an opening portion in a center and a penetration hole which extends in a parallel to said light emission surface to penetrate said heat radiation member.

14. The liquid crystal display according to claim 13, wherein a shape of said penetration hole is tapered.

15. The liquid crystal display according to claim 14, wherein the shape of said penetration hole is determined based on a flow route of air in a space formed by said heat radiation member.

16. The liquid crystal display according to claim 12, wherein said heat radiation member has an opening portion in a center and a groove which is formed to extend from opening portion to an outer circumference surface of said heat radiation member.

17. The liquid crystal display according to claim 16, wherein a shape of said groove is tapered.

18. The liquid crystal display according to claim 17, wherein the shape of said groove is determined based on a flow route of air in a space formed by said heat radiation member.

19. The liquid crystal display according to claim 12, wherein said heat radiation member and said light source device are integrated into a single unit.

20. A light source device having a straight fall type structure, comprising:

a light source;

a lamp house which houses said light source and has a light emission surface from which a light from said light source is emitted; and

a protrusion which is arranged in a circumference edge portion on said light emission surface to have a frame structure,

wherein said protrusion has an opening portion in a center and a penetration hole which extends in a parallel to said light emission surface to penetrate said protrusion.

21. The light source device according to claim 20, wherein a shape of said penetration hole is tapered.

22. The light source device according to claim 21, wherein the shape of said penetration hole is determined based on a flow route of air.

23. A light source device having a side light type structure, comprising:

a light source:

a light guide member through which a light form said light source is emitted; and

a protrusion which is arranged in a circumference edge portion on said light guide member to have a frame structure,

wherein said protrusion has an opening portion in a center and a penetration hole which extends in a parallel to said light guide member to penetrate said protrusion.

24. The light source device according to claim 23, wherein a shape of said penetration hole is tapered.

25. The light source device according to claim 24, wherein the shape of said penetration hole is determined based on a flow route of air.

* * * * *