UNITED STATES PATENT AND TRADEMARK OFFICE

BEFORE THE PATENT TRIAL AND APPEAL BOARD

BOE Technology Group Co., Ltd.
Petitioner

v.

Optronic Sciences LLC
Patent Owner

Inter Partes Review No.: IPR2024-01130

PETITION FOR INTER PARTES REVIEW OF U.S. PATENT NO. 7,168,842 UNDER 35 U.S.C. §§ 311-319 AND 37 C.F.R. §§ 42.1-100, ET SEQ

TABLE OF CONTENTS

Page

I. Introduction 1
II. Statement of Precise Relief Requested 1
III. The 842 Patent 1
A. Overview 1
B. File History 2
C. Person of Ordinary Skill in the Art 3
D. Claim Construction 3
1. "wherein the second portion extends above the light guiding plate" (claim 4) and "the second portion extending above the light guiding plate" (claim 7[b]) 4
2. "heat dissipating means attached onto the surface of the circuit board for conducting a heat generated thereon" (claims 6 and 9) 6
IV. Overview of the Prior Art References 7
A. EX1004("Kurokawa") 7
B. EX1005 ("Isoda") 7
C. EX1006 ("Fukuta") 7
D. EX1008 ("Uekusa") 8
E. Analogous Art 8
V. Ground 1: Uekusa 8
A. Claim 3 8
1. [3pre] 8
2. [3a] 8
3. [3b] 10
4. [3c] 13
B. Claim 4 15
C. Claim 5 17
D. Claim 6 23

E. Claim 7 26
1. [7pre] 26
2. [7a] 26
3. [7b] 26
4. [7c] 26
5. [7d] 26
6. [7e] 27
F. Claim 8 27
G. Claim 9 27
VI. Ground 2: Uekusa, Isoda 27
A. Combination Rationale 27
B. Claim 3 35
1. [3pre] 35
2. [3a] 35
3. [3b] 36
4. [3c] 36
C. Claim 4 38
D. Claim 5 39
E. Claim 6 40
F. Claim 7 46
1. [7pre] 46
2. [7a] 46
3. [7b] 46
4. [7c] 46
5. [7d] 46
6. [7e] 46
G. Claim 8 46
H. Claim 9 47
VII. Ground 3: Uekusa, AAPA 47

A. Combination Rationale 47
B. Claim 6 47
C. Claim 9 48
VIII. Ground 4: Kurokawa Anticipation 48
A. Claim 3 48
1. [3pre] 48
2. [3a] 48
3. [3b] 49
4. [3c] 52
B. Claim 4 56
C. Claim 5 58
D. Claim 6 60
E. Claim 7 66
1. [7pre] 66
2. [7a] 66
3. [7b] 66
4. [7c] 66
5. [7d] 67
6. [7e] 67
F. Claim 8 67
G. Claim 9 67
IX. Ground 5: Kurokawa Obviousness 67
A. Claim 4 67
B. Claim 7 69
1. [7pre] 69
2. [7a] 69
3. [7b] 69
4. [7c] 69
5. [7d] 69

6. [7e] 69
C. Claim 8 69
D. Claim 9 69
X. Ground 6: Kurokawa, Isoda....70
A. Combination Rationale....70
B. Claim 3 75
1. [3pre]....75
2. [3a] 75
3. [3b] 75
4. [3c] 75
C. Claim 4 76
D. Claim 5 76
E. Claim 6 79
F. Claim 7 84
1. [7pre]....84
2. [7a] 84
3. [7b] 84
4. [7c] 84
5. [7d] 84
6. [7e] 84
G. Claim 8 84
H. Claim 9 84
XI. Ground 7: Fukuta Anticipation....85
A. Claim 3 85
1. [3pre]....85
2. [3a] 85
3. [3b] 86
4. [3c] 87
B. Claim 4 87

XII. Ground 8: Fukuta Obviousness 88
A. Claim 4 88
XIII. Discretionary Denial is not Warranted 90
A. 35 U.S.C. § 314(a) Analysis 90
1. Stay 90
2. Trial Date 90
3. Parallel Proceeding 90
4. Issue Overlap 90
5. Same Party 90
6. Other Considerations 91
B. 35 U.S.C. § 325(b) Analysis 91
XIV. Compliance with Formal Requirements 92
A. Mandatory Notices Under 37 C.F.R. §§ 42.8(b)(1)-(4) 92
1. Real Party-In-Interest 92
2. Related Matters 92
3. Lead and Backup Counsel 92
4. Service Information 92
B. Proof of Service on the Patent Owner 93
C. Power of Attorney 93
D. Standing 93
E. Fees 93
XV. Conclusion 93

INDEX OF EXHIBITS

Exhibit No.	Description
1001	U.S. Pat. No. 7,168,842 (**"the 842 Patent"**)
1002	Declaration of Dr. R. Jacob Baker
1003	File History of 7,168,842 (11/00,372)
1004	JP 2004-279262 ("**Kurokawa**")
1005	U.S. 7,218,041 ("**Isoda**")
1006	U.S. 2002/0047978 ("**Fukuta**")
1007	U.S. 2002/0140880 ("**Weindorf**")
1008	U.S. Pat. No. 6,927,424 ("**Uekusa**")
1009	U.S. 2002/0030445 ("**Fukasawa**")
1010	JP 2002-164583 (Machine Translated via Google Translate and Espacenet)
1011	U.S. 2004/0061440 ("**Imai**")
1012	U.S. 2004/0130884 ("**Yoo**")
1013	JP 2004-193002 ("**Sakai**") (Machine Translated via Google Translate)
1014	U.S. 2004/0262053 ("**Ludewig**")
1015	U.S. 2004/0169451 ("**Oishi**")
1016	KR 2004/0057269 (Machine Translated via Google Translate)
1017	EP 1467414 ("**Ge**")
1018	U.S. 2001/0024250 ("**Fujishiro**")
1019	JP 2001-160312 ("**Takuo**") (Machine Translated via Google Translate)
1020	U.S. 2001/0030866 ("**Hochstein**")
1021	Curriculum Vitae of Dr. R. Jacob Baker

CHART OF CLAIMS
[3pre] A backlight package comprising:
[3a] a light guiding plate having a first side;
[3b] a first fastener having a first portion and a second portion, the first portion disposed adjacent to the first side of the light guiding plate, wherein the first portion and the second portion are arranged in a substantially perpendicular relationship to form a substantially L-shaped structure; and
[3c] a light emitting device disposed on the first portion of the first fastener for emitting a light toward the light guiding plate.
[4] The backlight package as claimed in claim 3, wherein the second portion extends above the light guiding plate.
[5] The backlight package as claimed in claim 3, further comprising a circuit board and a conducting wire, the circuit board connecting the second portion, and the conducting wire electrically coupling the light emitting device to the circuit board.
[6] The backlight package as claimed in claim 3, further comprising a circuit board and a heat dissipating means, the circuit board connecting the second portion, and the heat dissipating means attached onto the surface of the circuit board for conducting a heat generated thereon.
[7pre] A backlight package comprising:
[7a] a light guiding plate having a first side;
[7b] a first fastener having a first portion and a second portion, the first portion extending along the first side of the light guiding plate, and the second portion extending above the light guiding plate wherein the first portion and the second portion are arranged in a substantially perpendicular relationship to form a substantially L-shaped structure;
[7c] a light emitting device disposed on the first portion of the first fastener for emitting a light toward the light guiding plate; and
[7d] a circuit board connecting the second portion of the first fastener; and
[7e] a conducting wire electrically coupling the light emitting device to the circuit board.
[8] The backlight package as claimed in claim 7, wherein the first portion is substantially perpendicular to the second portion.
[9] The backlight package as claimed in claim 7, further comprising a heat dissipating means attached onto the surface of the circuit board for conducting a heat generated thereon.

I. INTRODUCTION

BOE Technology Group Co. Ltd. ("Petitioner") requests *inter partes* review of claims 3-9 ("Challenged Claims") of U.S. Patent No. 7,168,842 ("842 patent," EX1001), owned by Optronic Sciences LLP ("PO"), pursuant to 35 U.S.C. §§311–19 and 37 C.F.R. §42.100.

II. STATEMENT OF PRECISE RELIEF REQUESTED

In accordance with 35 U.S.C. § 311, Petitioner requests cancelation of claims 3-9 of the 842 patent in view of the following grounds:

Ground	Claims	Stat. Basis	Prior Art
1	3-9	35 U.S.C. § 102	Uekusa
2	3-9	35 U.S.C. § 103	Uekusa, Isoda
3	6, 9	35 U.S.C. § 103	Uekusa, Applicant Admitted Prior Art (AAPA)
4	3-9	35 U.S.C. § 102	Kurokawa
5	4, 7-9	35 U.S.C. § 103	Kurokawa
6	3-9	35 U.S.C. § 103	Kurokawa, Isoda
7	3, 4	35 U.S.C. § 102	Fukuta
8	4	35 U.S.C. § 103	Fukuta

This Petition is based on, and copies significant portions from, the declaration of Dr. R. Jacob Baker. EX1002.

III. THE 842 PATENT

A. Overview

The 842 patent discloses a conventional LED backlighting package of the type that was well known in the prior art by 2004. EX1001, Fig. 4. The 842 patent discloses conventional hardware (LED, circuit board, frame, light guiding plate,

wires, and heat dissipating plates) for performing the conventional function of backlighting a screen. *Id.* As further explained by Dr. Baker (and shown below in Fig. 4), the 842's purported invention was mounting an LED module on the side of an L-shaped fastener, while keeping the circuit board and heat dissipating plates in their typical orientation. EX1002, ¶¶48-58.

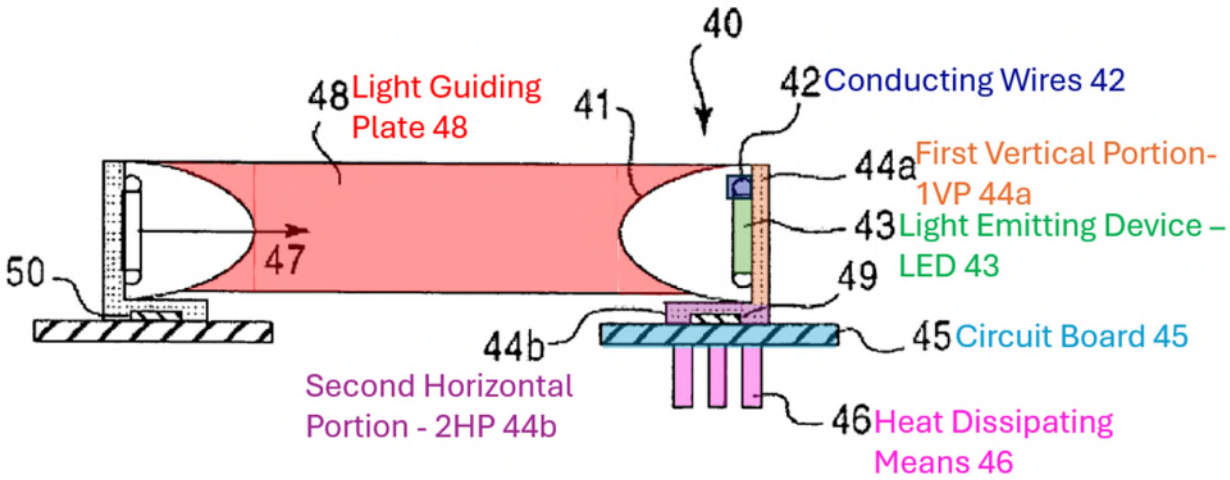

Fig.4

B. File History

On Dec.1, 2004 applicant filed U.S. Appl. No. 11/00,372. Ex1001, cover.

On June 2, 2006, the Examiner rejected all independent claims. EX1003, 35-45.

On Aug. 31, 2006, applicant amended independent claims 3 and 7 to require the first and second portions of the fastener being "arranged in a substantially perpendicular relationship to form a substantially L-shaped structure." EX1003,

21-32. As shown herein, this purportedly novel feature was well known in prior art not before the examiner.

On. Sept. 25, 2006, the Examiner issued a notice of allowance.

C. Person of Ordinary Skill in the Art

A person of ordinary skill in the art ("POSITA") at the time of the alleged invention of the 842 patent (Dec. 1, 2004) would have had a Bachelors' degree in electrical engineering or a comparable field of study, plus approximately one or more years of professional experience with electronic and optoelectronic system design. Additional graduate education could substitute for professional experience, and significant experience in the field could substitute for formal education. EX1002, ¶¶ 45-46.

D. Claim Construction

The Challenged Claims are interpreted using the same claim construction standard that is used to construe the claim in a civil action in federal district court. 37 C.F.R. § 42.100(b).

Petitioner does not contend that its proposed constructions are complete constructions of these limitations or the claims for any other purpose, including for issues that have been raised in the related litigation.

Any claim terms not listed below should be construed according to their plain and ordinary meaning to a POSITA at the time of the 842 patent.

1. "wherein the second portion extends above the light guiding plate" (claim 4) and "the second portion extending above the light guiding plate" (claim 7[b])

No claim construction is necessary for these terms for Grounds 1-3 because Uekusa discloses a second portion extending above a light guiding plate under the ordinary meaning of "above." Claim construction may be necessary for these terms for at least some of the embodiments in some of the other grounds. EX1002, ¶¶66-67.

The only disclosed embodiment in the 842 patent is illustrated in Figure 4, reproduced below.

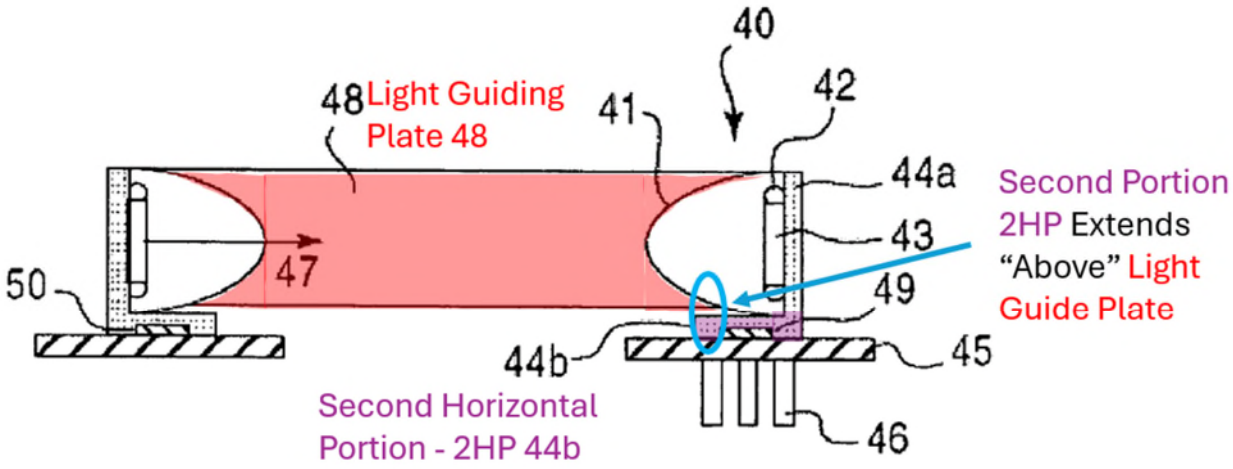

Fig.4

As shown in Figure 4, the second portion 44b is below, not above, the light guiding plate 48 under the ordinary meaning of above. The specification refers to this arrangement as "The second portion 44B of the L shaped fastener extends

behind the light guiding plate 48…." EX1001, 3:37-39 (emphasis added). The reference to "behind" indicates to a POSITA that light is emitted toward the top of Figure 4 from a light guiding plate to a user of the display, such that up in the figure is toward the "front" of the display and down is toward the "back" of the display. The specification also states that "heat-dissipating plates 46 are attached to the underside of the horizontally oriented PCB 45." *Id.*, 3:26-27 (emphasis added). The use of "under" in this way would confirm to a POSITA that these terms are being used according to their ordinary meanings and that second portion 44b is similarly "under" the light guiding plate. This understanding would also be confirmed by the specification consistently using vertically relative terms, like "bottom," "top," and "underneath," according their ordinary meanings for the other figures. EX1001, Figs. 1-3, 1:36 ("bottom"), 1:38 ("top"), 2:7 ("top"), 2:9-10 ("underneath"). Thus, under the ordinary meaning of "above" and the only frame of reference provided in the specification, a POSITA would have understood that in the only disclosed embodiment, the second portion 44b is "below," "under," and "behind" the light guiding plate 48, not "above" as claimed. EX1002, ¶68.

In case PO argues "above" should be construed (contrary to its ordinary meaning) in a way to encompass the only disclosed embodiment, Petitioner alternatively considers the validity of the claims using a construction of "above" that means "displaced vertically from and overlapping a portion of the light

guiding plate." This construction encompasses the only disclosed embodiment because second portion 44b is displaced vertically from and overlaps with a portion of light guiding plate 48 in Figure 4. EX1002, ¶69.

2. "heat dissipating means attached onto the surface of the circuit board for conducting a heat generated thereon" (claims 6 and 9)

This term uses the words "means" and recites the function "for conducting a heat generated thereon." This term does not recite any structure for performing that function. Accordingly, this term should be construed pursuant to Section 112(f). The limitation explicitly requires the function of "conducting heat generated on the circuit board." Any such conduction constitutes heat "dissipation." The only structure disclosed and linked by the specification to perform that function is heat-dissipating plates 46 (plural). EX1001, Fig. 4, 2:9-11, 3:25-32, 3:51-58. Petitioner refers to this construction as the narrow construction because it requires plural heat-dissipating plates. EX1002, ¶¶70-72.

Under an alternative, broader interpretation, corresponding structure also includes "at least one heat-dissipating plate" (singular) based on the structure disclose in clam 1. EX1001, 4:30-31 (claim 1). However, this structure is only disclosed in the body of claim 1 and is not linked to performing the claimed function of conducting heat generated on the circuit board. *Id.* In fact, claim 1 merely specifies where that plate is disposed without linking it to any function. *Id.*

Thus, a singular heat-dissipating plate is not a corresponding structure. *B. Braun Med., Inc. v. Abbot Labs.*, 124 F.3d 1419, 1424-25 (Fed. Cir. 1997). Moreover, claim 1 does not read on any embodiment disclosed in the specification, because no embodiment has a circuit board disposed "on one face" of the horizontal member and a heat-dissipating plate (singular or plural) disposed "on the other face" of that horizontal member as required by claim 1. Thus, a POSITA would not have drawn any inferences from unsupported claim 1. Petitioner refers to this construction as the broad construction because it encompasses both single and plural heat-dissipating plates. EX1002, ¶73.

IV. OVERVIEW OF THE PRIOR ART REFERENCES

A. EX1004("Kurokawa")

JP 2004-279262 ("Kurokawa"), published on October 7, 2004, is prior art under pre-AIA 35 U.S.C. § 102(a).

B. EX1005 ("Isoda")

U.S. 7,218,041 ("Isoda"), filed November 5, 2003, issued May 15, 2007, is prior art under pre-AIA 35 U.S.C. §§ 102(a), 102(b), 102(e).

C. EX1006 ("Fukuta")

U.S. 2002/0047978 ("Fukuta"), filed August 20, 2001, published April 25, 2002, is prior art under pre-AIA 35 U.S.C. §§ 102(a) and 102(b).

D. EX1008 ("Uekusa")

U.S. 6,927,424 ("Uekusa"), filed November 11, 2003, issued August 9, 2005, is prior art under pre-AIA 35 U.S.C. § 102(e).

E. Analogous Art

Kurokawa, Isoda, Fukuta, and Uekusa are analogous art because each are within the field of electronic and optoelectronic system design. EX1001, 1:7-8. EX1002, ¶78.

V. GROUND 1: UEKUSA

A. Claim 3

1. [3pre]

Uekusa discloses "A backlight package comprising." *See* EX1008, Figs. 1-3, 1:29-32, 5:23-34, 6:29-36; *see* [3a]-[3c], [7]; EX1002, ¶79.

2. [3a]

Uekusa discloses "a light guiding plate (optical wave-guide 55) having a first side guiding end surface 56." EX1008, Figs. 1-3, Figs. 10-11, 1:33-42, 1:42-56, 2:9-15, 5:14-24, 5:24-33, 5:34-39, 6:29-36; EX1002, ¶80.

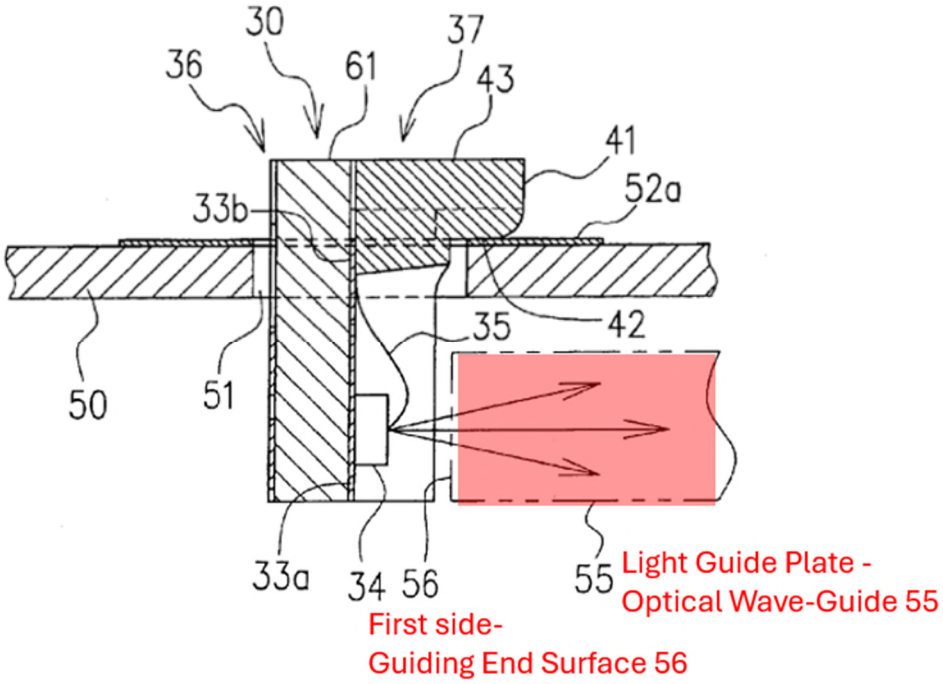

As shown in annotated Fig. 3 above, the optical wave-guide 55 disclosed in Uekusa helps distribute light to backlight a liquid crystal. EX1008, Figs. 1-3, 5:14-24, 5:24-33, 5:34-39, 6:29-36. As shown in annotated Figure 3 and patent Figure 10, optical wave-guides 55 and 13 allows the light from LED 34 to enter 55 through guide end surface 56 and move through the wave-guide which allows for backlight illumination across the liquid crystal display. EX1002, ¶81.

As explained further by Dr. Baker, a POSITA would have understood optical wave-guide 55 to be a light guiding plate because it guides the light that is emitting by the LED to the guiding end surface 56, the claimed first side of the light guiding plate, to provide backlighting for an LCD display. EX1002, ¶¶82-84.

A POSITA would have known that in the context of Uekusa, "optical wave-guide" and "light guide plate" refer to the same thing. For example, Uekusa refers

to component 13 in Figure 13 as "optical wave guide 13." But US2002/0030445 contains an identical figure (Figure 2) and refers to the identical component 13 as "light conductor plate 13." EX1009, Fig. 2, [0005]. Uekusa is related to US2002/0030445 because they are assigned to the same assignee. More directly, Uekusa teaches it as an improvement on the subject matter contained in US2002/0030445. Uekusa states that it is an improvement on laid open publication JP 2002-164583, which is the publication of JP 2001-210604, to which US2002/0030445 claims priority. EX1008, Fig. 11, 1:49-55; EX1010, cover (publication JP2002-164583 with application number JP2001-210604); EX1009, cover (US2002/0030445 claiming priority to JP2001-210604). This explains why Uekusa and US2002/0030445 contain identical figures. This example confirms that a POSITA would have known that in the context Uekusa's LCD backlights, an "optical wave guide" and "light guide plate" are interchangeable terms that refer to the same subject matter. EX1002, ¶82-84.

3. [3b]

Uekusa discloses "a first fastener (body section 36) having a first portion (upright portion 32 1VP) and a second portion (extension part 41 and mounted portion 42 2HP), the first portion disposed adjacent to the first side of the light guiding plate (55), wherein the first portion and the second portion are arranged in a substantially perpendicular relationship to form a substantially L-shaped

structure." EX1008, Figs. 1-3, 3:47-5:39, 3:54-4:03, 4:04-22, 4:54-60, 4:61-5:04, 5:14-23, 5:42-54, 5:55-65; EX1002, ¶85.

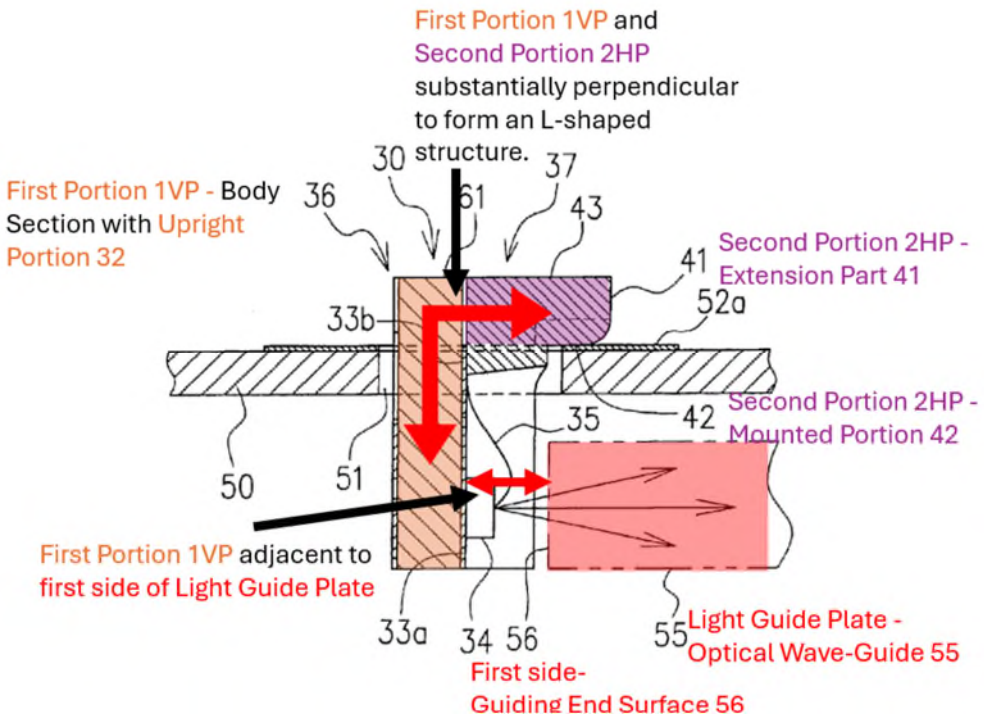

As shown in annotated Fig. 3 above, Uekusa discloses a body section 36, which includes first vertical portion (1VP) upright portion 32 and resin forming section 37 with horizontal portion 2HP mounted portion 42 and extension part 41, with the first vertical portion disposed adjacent to the first side of a light guiding plate (optical wave guide 55) and the first portion and the second portion are arranged in a substantially perpendicular relationship to form a substantially L-shaped structure. EX1008, Figs. 1-3, 3:47-5:39, 3:54-4:03, 4:04-22, 4:54-60, 4:61-5:04, 5:14-23, 5:42-54, 5:55-65; EX1002, ¶86.

Under a narrow construction of "disposed on" that requires "directly disposed on" these limitations are still satisfied under two alternative mappings. These mappings are discussed further in limitations [3c] and [5]. EX1002, ¶87.

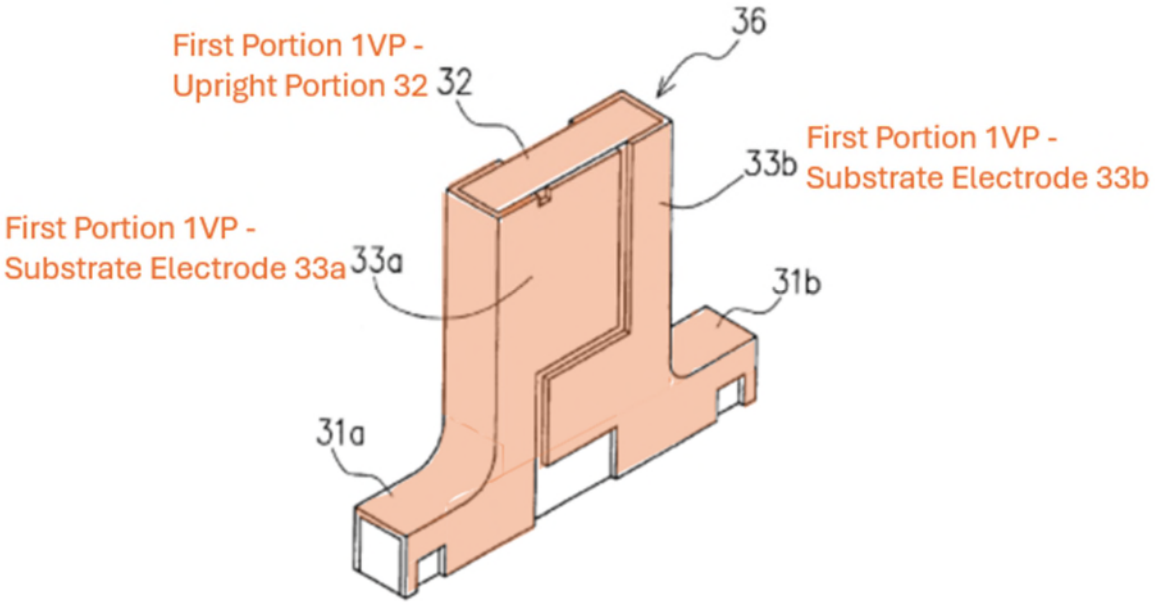

In a first alternative, the first portion is the combination of upright portion 32 and electrodes 33a and 33b. Portion 32 is manufactured with substrate electrodes 33a and 33b as a singular component, and the LED is mounted to substrate electrode 33a. EX1008, Figs. 4-8, 5:43-54, 5:55-65. Figure 5 illustrates this combined component after manufacture and prior to the addition of the LED and the second horizontal portion. A POSITA would have understood that the specification indicates that during the first step of manufacturing, upright portion 32 and substrate electrodes 33a and 33b are formed during the same manufacturing

step using etching and deposition. EX1008, Figs. 4-8, 5:43-54, 5:55-65; EX1002, ¶88.

In a second alternative, the first portion is still only upright portion 32 and the LED is the combination of LED 34 and electrodes 33a and 33b. EX1008, Figs. 1-3. This second alternative is relevant to claims [3c], 5, 7, and 9, discussed below. EX1002, ¶89.

4. [3c]

Uekusa discloses "a light emitting device (LED 34) disposed on the first portion of the fastener (1VP) for emitting a light toward the light guiding plate (55)." EX1008, Figs. 1-3, Figs. 4-8, 3:54-4:03, 4:28-36, 5:43-54, 5:55-65; EX1002, ¶90.

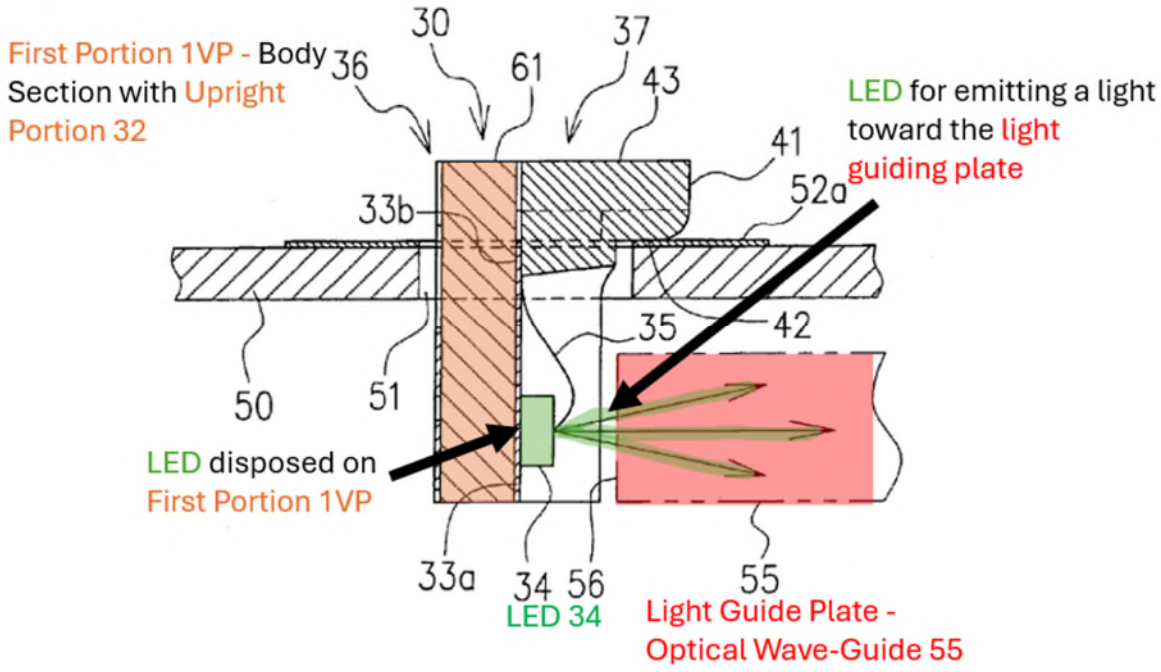

As shown above in annotated Fig. 3, Uekusa discloses LED 34 disposed on first portion (VL1) of body section 36 for emitting light toward the side of light guiding plate 55. Uekusa teaches the LED 34 is used as a light source for the optical wave-guide 55 in a backlight of a liquid crystal, and that the light emitted from LED 34 is directed toward a guiding end surface 56 and goes straight in the optical wave-guide 55. *Id.* 5:23-33; EX1002, ¶91.

LED 34 is mounted directly to exposed substrate electrode 33a, which in turn is bonded to upright portion 32. *Id.*, Figs. 1-8, 3:54-4:03, 4:28-36, 5:55-65. Thus, LED 34 is directly disposed on exposed substrate electrode 33a and indirectly disposed on upright portion 32. EX1002, ¶92.

Under a broad interpretation of "disposed on"—encompassing both directly disposed on and indirectly disposed on—LED 34 is indirectly disposed on the upright portion 32 while being directly disposed on exposed substrate electrode 33a. EX1008, Figs. 1-3, 3:54-4:03, 4:28-36, 5:55-65. A broad interpretation is consistent with the ordinary meaning of "disposed on," which includes both indirectly and directly disposed on, particularly in the context of a "comprising" claim like claim 3. A broad interpretation of "disposed on" is consistent with the specification of the 842 patent, because the specification uses "disposed on" broadly to refer to components that are indirectly disposed on each other. For example, the specification states that the heat-dissipating plates 46 conduct or

dissipate heat "produced by electronic components disposed on the PCB 45." *Id.* the *Id.*, 3:25-31, 3:51-58. Therefore, the specification supports a broad interpretation of "disposed on" which does not require components to be directly disposed on other components. Under a broad interpretation of "disposed on," this limitation is satisfied by Uekusa. EX1002, ¶93.

Under the first alternative (wherein the first portion is the combination of portion 32 and electrodes 33a and 33b), Uekusa discloses this limitation under a narrow "directly disposed on" construction because the LED is directly disposed on electrode 33a. EX1002, ¶94.Under the second alternative (wherein the LED comprises LED 34 and electrodes 33a and 33b), Uekusa discloses this limitation under a narrow "directly disposed on" construction because LED (34, 33and 33b) is directly disposed on upright portion 32. A POSITA would have considered the claim term "LED" in its ordinary usage to encompass that an LED 34 includes electrodes. A POSITA would have understood that an LED needs electrodes to receive power from an outside power source to emit light. A POSITA would often refer to an LED module or subassembly, including its electrodes, as an "LED." EX1002, ¶95.

B. Claim 4

Uekusa discloses "The backlight package as described in claim 3 (*see* claim 3), wherein the second portion (2HP) extends above the light guiding plate (optical

wave-guide 55)." EX1008, Figs. 1-8, 1:11-16, 1:29-32, 4:4-21, 4:54-60, 5:12-14, 5:23-34, 6:37-36; *see* Claim 3; EX1002, ¶96.

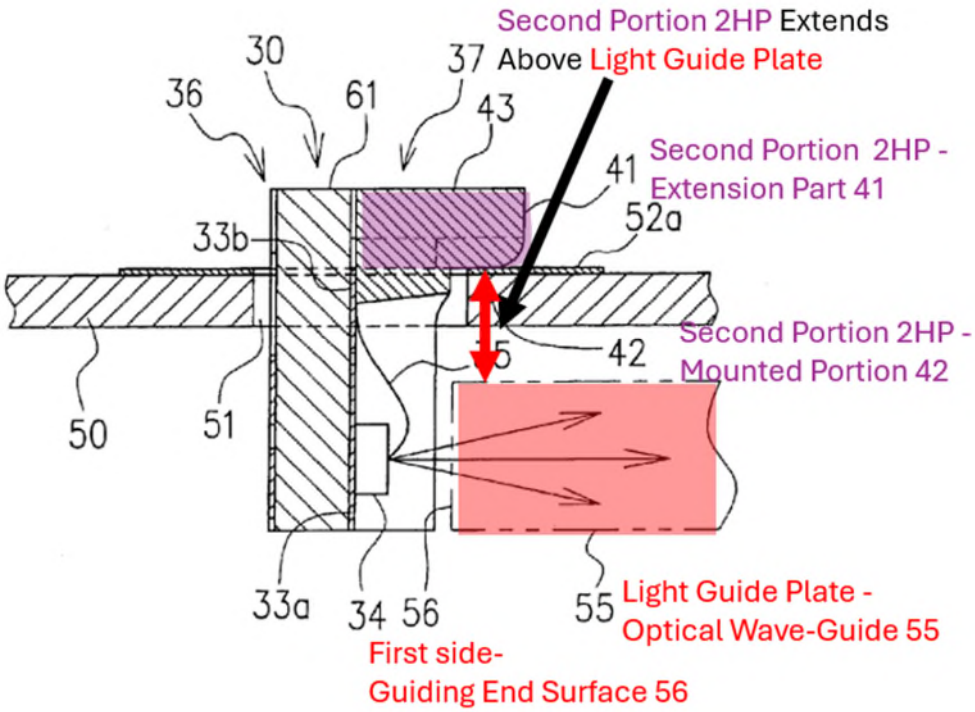

As shown above in annotated Fig. 3, Uekusa discloses the horizontal portion 2HP mounted portion 42 and extension part 41 is displaced vertically from and overlaps (as shown by the red box) with a portion of optical wave-guide 55. This satisfies the ordinary meaning of "above." EX1002, ¶97.

Even if "above" was considered to be the opposite orientation as disclosed in the embodiment of the patent, the specification teaches that LED structure 30 should be inserted through a hole 51 of motherboard 50 for a better mounting with three points. EX1008, 4:61-5:11. Therefore a POSITA would have known that the attachment of 34 to motherboard 50 "may, also, be carried out in such a state that

they are upside down." *Id.*, 5:12-14. Thus, Uekusa renders obvious all possible orientations of Uekusa's device in three dimensions, including where it is upside down from the orientation illustrated in Figures 1-3. EX1002, ¶98.

C. Claim 5

Uekusa discloses "The backlight package as claimed in claim 3 (*see* claim 3), further comprising a circuit board (motherboard 50) and a conducting wire (front wire 35, substrate electrodes 33a and 33b, and circuit electrodes 52a and 52b), the circuit board (50) connecting the second portion (horizontal portion 2HP mounted portion 42 and extension part 41), and the conducting wire (33a, 33b, 35, 52a, 52b) electrically coupling the light emitting device (LED 34) to the circuit board (50)." EX1008, Figs. 1-8, 3:54-4:03, 4:11-21, 4:61-5:04, 5:5-11, 5:43-54, 5:66-6:06; *see* Claim 3; EX1002, ¶99.

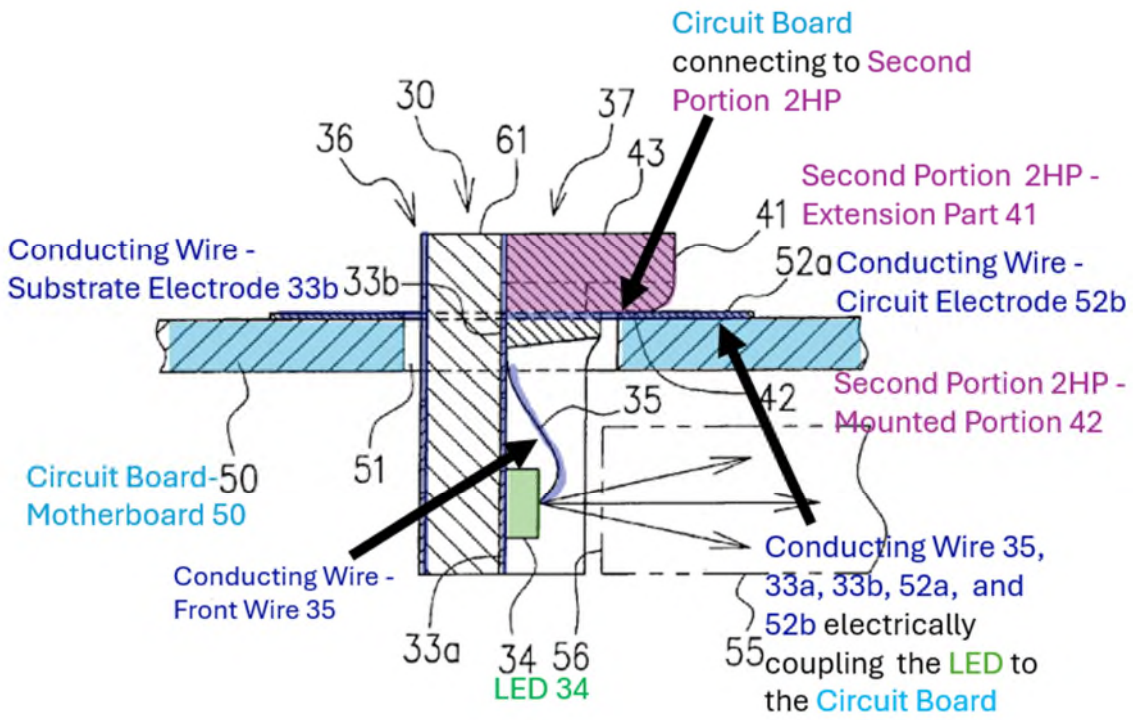

As shown in annotated Figure 3 above, Uekusa discloses motherboard 50, connecting to the horizontal portion 2HP mounted portion 42 and extension part 41. A POSITA would have understood that a motherboard is a circuit board because it is a board on which circuits are printed, e.g., electrodes 52a and 52b. Additionally, a POSITA would have understood that those electrodes are connected to other circuits and circuitry on the motherboard, such as LED driver circuitry. As such the sole purpose of those electrodes is to supply power to drive LED 34. The specification discloses that extension part 41 has a generally trapezoidal shape and is formed at the center with a rectangular mounted portion 42 projecting from the extension part 41 and that mounted portion 42 is mounted on the peripheral edge of motherboard hole 41 to support the attachment of LED

package 30 to motherboard 50. EX1008, 4:11-21, 4:61-5:04, 5:5-11; EX1002, ¶100.

Fig. 1

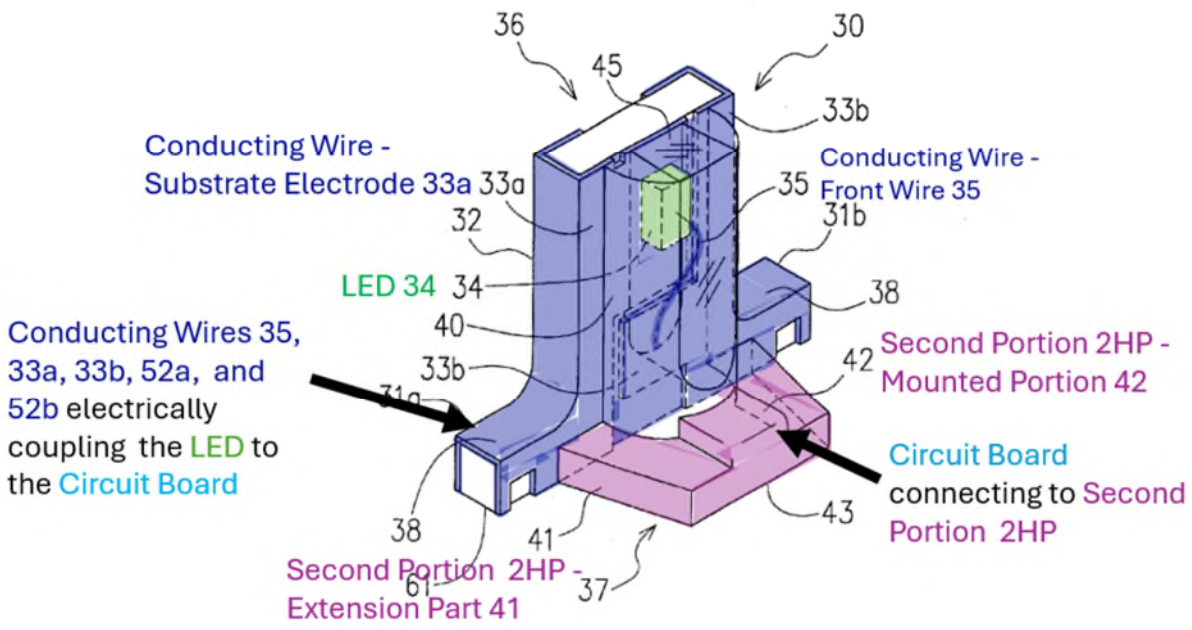

Further, as shown in annotated Figures 1, LED 34 is electrically coupled to motherboard 50 via front wire 35, substrate electrode 33b, solder 53 and printed wiring 52b. *Id.* 3:54-4:03, 4:11-21, 4:61-5:04, 5:5-11, 5:43-54, 5:66-6:06. Thus, each of front wire 35, electrode 33b, solder 53 and wiring 52b electrically couples LED 34 to the motherboard 50. EX1002, ¶101.

Fig. 2

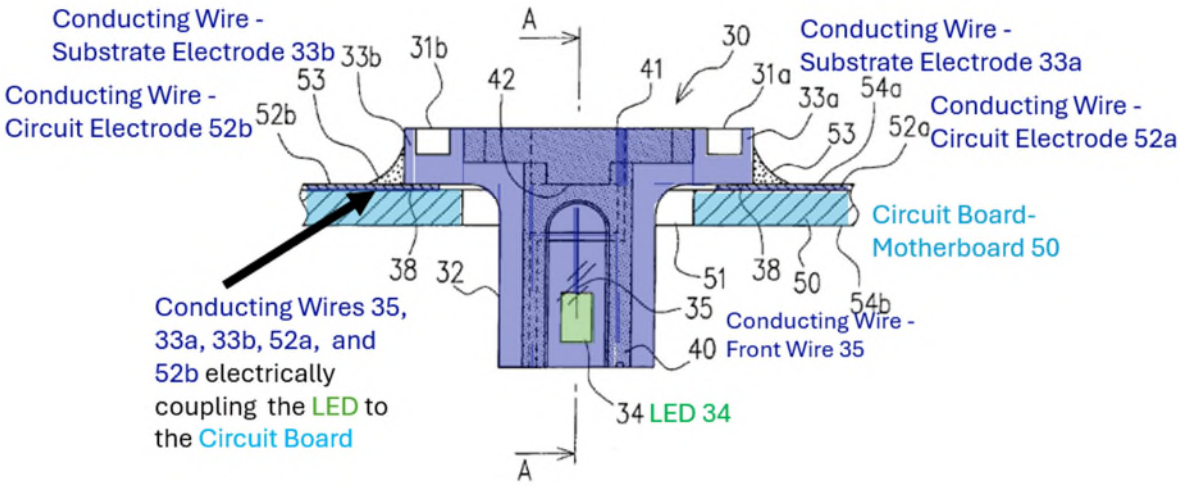

Under a broad interpretation of "disposed on" (where the LED 34 is indirectly disposed on upright portion 32 disclosed in [3b]-[3c]) as shown above in annotated Figure 2, LED 34 is directly connected to conducting wires which include substrate electrodes 33a and 33b (via wire 35) which are fixed to the conducting wires circuit electrodes 52a and 52b which is print wiring on motherboard 50 via solder 53. Thus, Uekusa discloses electrodes 33a and 33b (via wire 35) are fixed to the circuit electrode 52a and 52b to electrically couple the LED 34 to motherboard 50. EX1002, ¶102.

Fig. 2

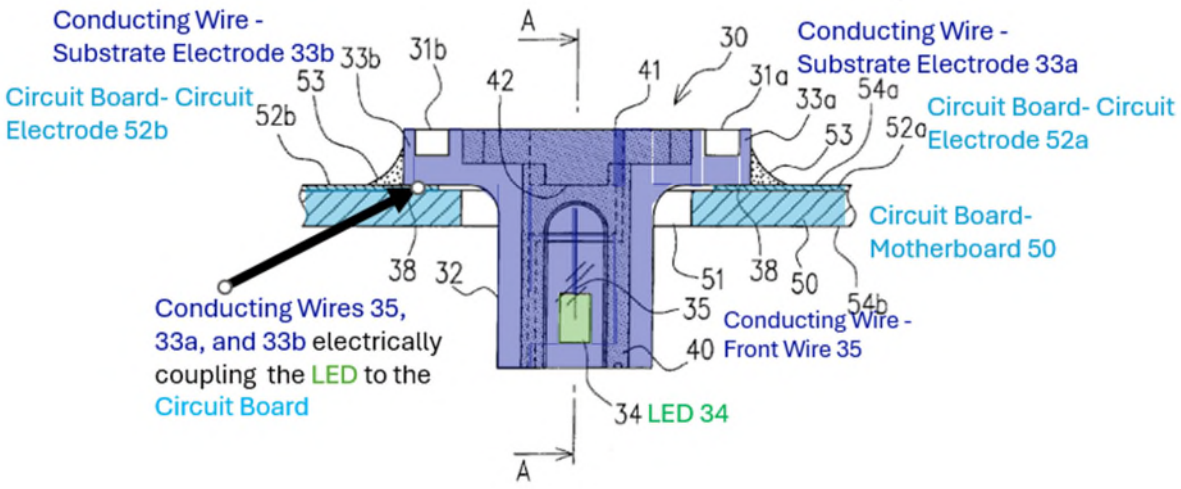

As an alternative broad interpretation, a POSITA would have understood circuit electrodes 52b and 52a to be a part of the motherboard 50. Therefore, LED 34 would be considered directly connected to conducting wires substrate electrodes 33a and 33b (via wire 35), which in turn are fixed to circuit electrodes 52b and 52a to be a part of the motherboard 50 via solder 53. Thus, Uekusa discloses electrodes 33a and 33b (via wire 35) electrically couple the LED 34 to circuit electrode 52a and 52b and motherboard 50. EX1002, ¶103.

Fig. 2

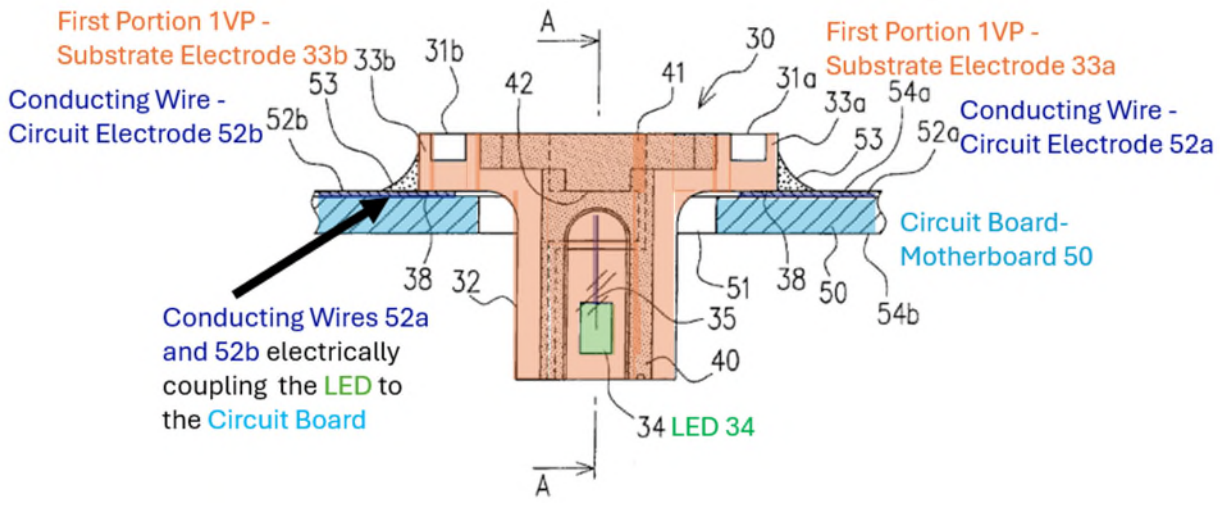

Further, under the first alternative (wherein the first portion is the combination of upright portion 32 and electrodes 33a and 33b, as explained above in [3b]-[3c]), as shown above in annotated Figure 2, first portion 1VP substrate electrodes 33a and 33b are fixed to the conducting wire circuit electrodes 52a and 52b which is print wiring on motherboard 50 via solder 53. *Id.* Thus, Uekusa discloses conducting wire circuit electrodes 52a and 52b which electrically couple the LED 34 to motherboard 50. EX1002, ¶104.

Fig. 2

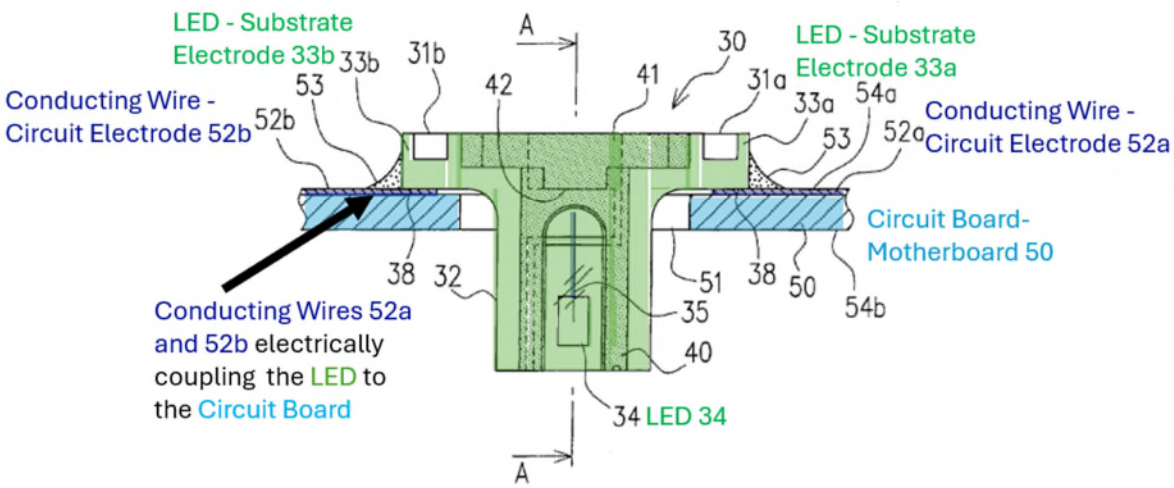

Further, under the second alternative (wherein the first portion is upright portion 32 and the LED 34 and electrodes 33a and 33b constitute the LED, as explained above in [3b]-[3c]), as shown above in annotated Figure 2, LED substrate electrodes 33a and 33b are fixed to the conducting wire circuit electrodes 52a and 52b which is print wiring on motherboard 50 via solder 53. *Id.* Thus, Uekusa discloses conducting wire circuit electrodes 52a and 52b which electrically couple the LED 34 (including electrodes 33a and 33b) to motherboard 50. EX1002, ¶105.

D. Claim 6

Uekusa discloses "The backlight package as claimed in claim 3, further comprising a circuit board (motherboard 50, which includes circuit electrodes 52a and 52b) and a heat dissipating means (portions of substrate electrodes 33a and 33b), the circuit board connecting the second portion (horizontal portion 2HP

mounted portion 42 and extension part 41), and the heat dissipating means (portions of substrate electrodes 33a and 33b) attached onto the surface of the circuit board (50, 52a, and 52b) for conducting a heat generated thereon." EX1008, Figs. 1-8, 3:54-4:03, 4:11-21, 4:61-5:04, 5:5-11, 5:43-54, 5:66-6:06; *see* Claim 3, 4; EX1002, ¶106.

Fig. 3

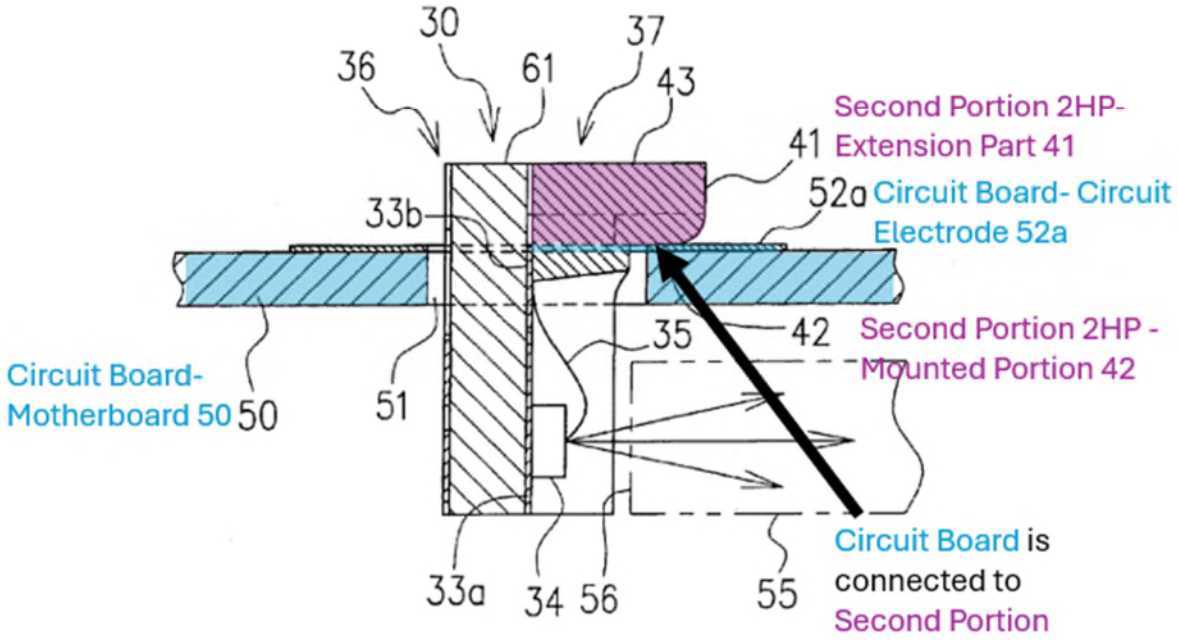

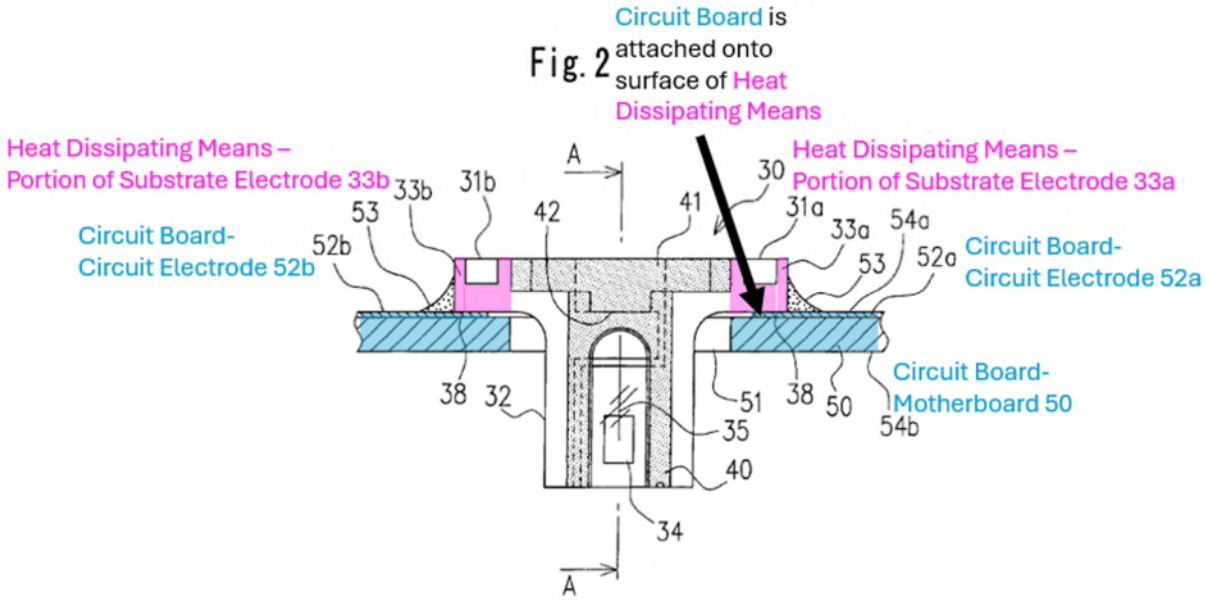

As shown in annotated Figures 2 and 3 above, Uekusa discloses a motherboard 50 and circuit electrodes 52a and 52b which are attached to horizontal portion 2HP mounted portion 42 and extension part 41, and heat dissipating means portions of substrate electrodes 33a and 33b which are attached onto the surface of circuit board (50, 52a, and 52b) by solder 53 for conducting a heat generated thereon. EX1002, ¶107.

A POSITA would have understood that the portions of substrate electrodes 33a and 33b would inherently perform the function of "conducting heat generated on the circuit board." A POSITA would have understood that substrate electrodes would be made of metal to conduct electricity to drive the LED 34, and so they also would inherently have conducted heat from any component they touched. A POSITA would have understood that any heat generated on the motherboard 50,

including by electrodes 52a, 52b and any other LED driver circuits or circuity on motherboard 50, and the portions of electrodes 33a and 33b on motherboard 50 with LED 34. EX1002, ¶108.

A POSITA would have understood that the portions of substrate electrodes 33a and 33b are the claimed heat-dissipating plates (plural). For example, the electrodes are metal plates around a resin core as shown in Figures 1 and 2. The plates have indentations 31a and 31b that result in the formation of multiple small metal plates or "fins" at both ends of 33a and 33b. Thus, a POSITA would have understood these portions of electrodes 33a and 33b in Uekusa teach the claimed structure of metal plates (plural). EX1002, ¶109.

E. Claim 7

1. [7pre]

See [3pre]; EX1002, ¶110.

2. [7a]

See [3a]; EX1002, ¶111.

3. [7b]

See [3b], [4]; EX1002, ¶112.

4. [7c]

See [3c]; EX1002, ¶113.

5. [7d]

See Claim 5; EX1002, ¶114.

6. [7e]

See Claim 5; EX1002, ¶115.

F. Claim 8

See [3b], [7b]; EX1002, ¶116.

G. Claim 9

See Claims 6, 7; EX1002, ¶117.

VI. GROUND 2: UEKUSA, ISODA

A. Combination Rationale

It would have been obvious to a POSITA to modify Uekusa in view of Isoda's teachings to add a plurality of heat dissipating plates to further increase the heat-dissipation of Uekusa's electronic components. EX1002, ¶118.

Uekusa teaches an invention and method for producing a light emitting diode suitable for side luminescence. EX1008, 1:06-10. Uekusa's side emitting LED can be used as the source of a backlight for illuminating the screen of small electronic devices with liquid crystal displays including portable phones, and other small electrical instruments. *Id.*, 1:12-16, 1:29-32, 5:23-34, 6:29-35. One of the benefits over prior art is that side LEDs have increased luminescence as compared to LEDs which are surface mounted and emit light upwards. *Id.*, 1:33-62. EX1002, ¶119.

Isoda discloses an invention relating to LED devices and specifically an invention to provide an effective means for heat dissipation for an LED device.

EX1005, 1:9-10, 2:14-27. Isoda describes in detail how LEDs can be connected to substrates, printed circuit boards, and cooling means. *Id.*, Fig. 2, Fig. 7, Fig. 8, 3:15-24, 3:62-4:02, 4:07-25. Isoda recognized that many printed substrate materials that LEDs are attached to are poor heat conductors, so when high currents are applied to LEDs to produce high brightness, the emitted heat degrades the LED device and its connections. *Id.*, 1:25-36, 1:55-67. One solution Isoda provided was to use substrate material with high heat conductivity. *Id.* The invention provides a preferred alternative of attaching a cooling device to the print substrate and allowing the cooling device to dissipate heat. *Id.*, 2:14-63. EX1002, ¶120.

<u>Heat Dissipating Means</u>

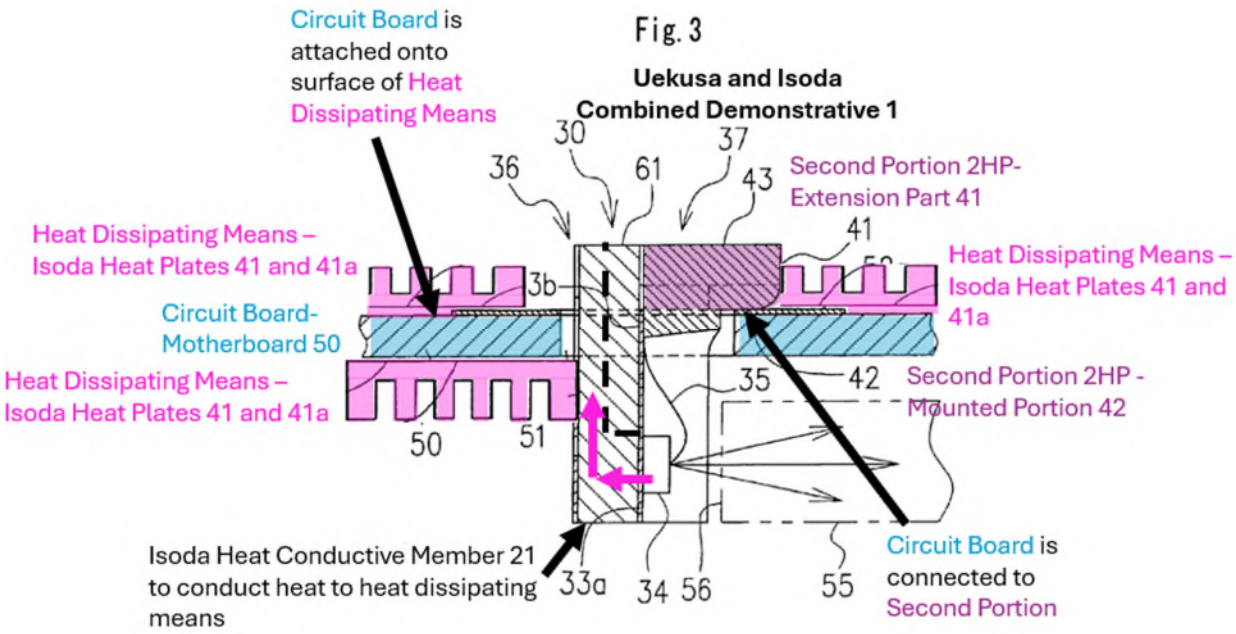

Uekusa and Isoda Combined Demonstrative 2

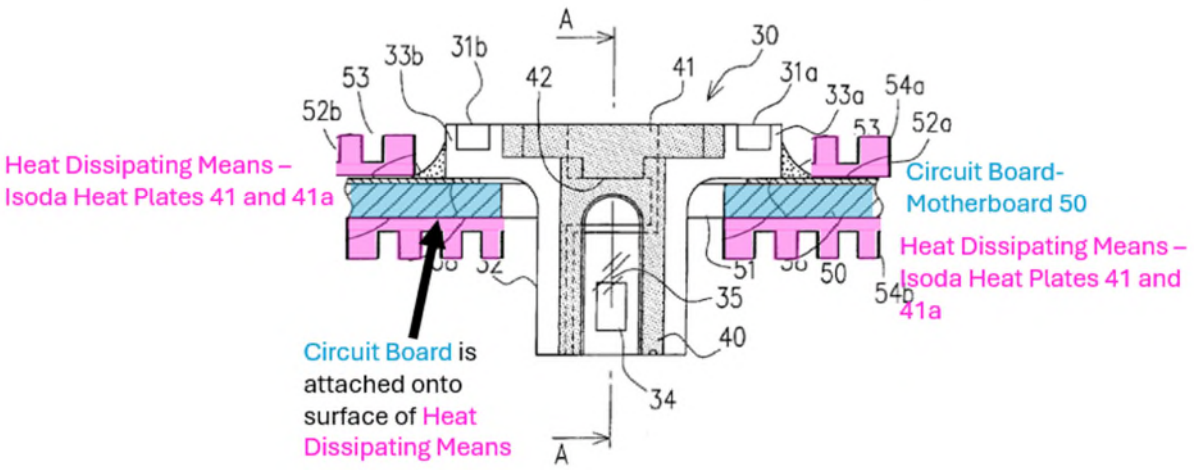

It would have been obvious for a POSITA to combine Uekusa's teachings related to LCD backlight devices utilizing LEDs with Isoda's teachings of enhanced heat dissipation methods by placing heat dissipating fins disclosed in Isoda to the left, right, and back sides of extension part 2HP on Uekusa's motherboard 50 and on the opposite side of motherboard to the left, right, and back sides of Uekusa's 1VP portion to enhance heat dissipation. A POSITA would have selected the precise location (or locations) of the heat dissipating fins in the combination based on the critical dimensions of the overall system design, but each location and combination of locations would have been obvious to a POSITA. Uekusa and Isoda Combined Demonstratives 1 and 2 above show obvious configurations of fin locations on Uekusa, for ease of illustration. EX1002, ¶121.

Additional evidence of obviousness is found in the prosecution history. During prosecution, the examiner applied US2001/0030866 to Hochstein to reject

then-pending claims 6 and 9. EX1003, 41-43 (Non-Final Rejection). Hochstein discloses heat dissipator 30 (with heat fins 32) directly attached to circuit board 32. EX1020, Fig. 1, [0022]-[0024]. The applicant did not contest that the heat dissipating means limitations would have been obvious, choosing instead to amend the independent claims to require the L-shaped fastener. EX1003, 21-32 (Amendments to the Claims); EX1002, ¶122.

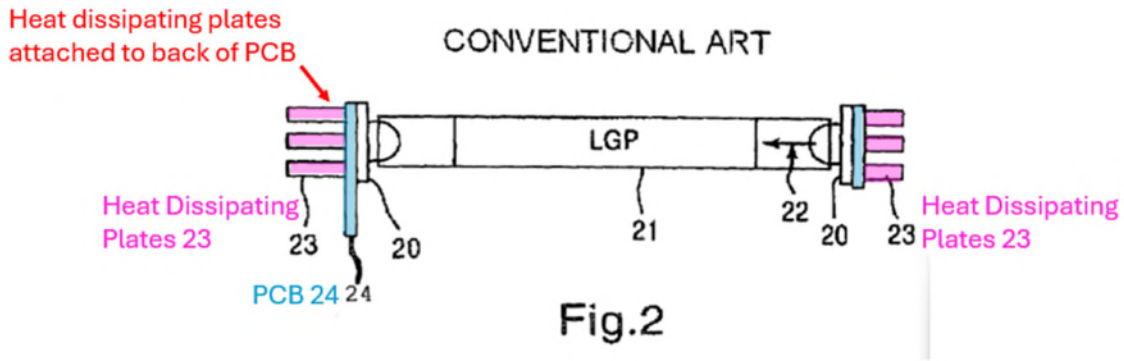

Fig.2

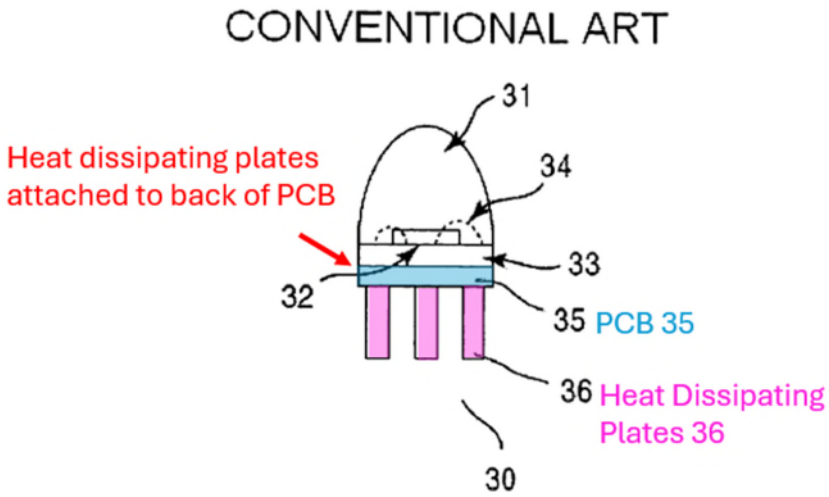

Fig.3

Further support that a POSITA would have been motivated to combine Uekusa's with Isoda is found in the applicant admitted prior art (AAPA) in the

842's specification. Figs. 2 and 3 seen above are consistent with the AAPA that confirms "conventional" backlight packages "typically" include heat plates connected to circuit boards to dissipate heat generated thereon, both on the back of the circuit board, and with the circuit board rotated 90 degrees. EX1001, Fig. 2 and 1:51-2:5 (plates 23 under PCB 24), Fig. 3 and 2:6-11 (plates 36 under PCB 35). The purported invention is rotating the LED ninety degrees using an L-shape fastener while keeping a circuit board in the prior art orientation (as shown in Figure 4), such that when the heat plate fins are placed in their "typical" prior art location underneath the circuit board, they continue to point down as shown in Figure 4. *Id.*, Fig. 4, 2:29-40, 3:51-58, 4:1-9. Uekusa rotates the LED ninety degrees using an L-shaped fastener with a PCB (motherboard with printed electrodes 52a and 52b) and the AAPA admits that "typically" heat plates would be placed "underneath of PCB" to dissipate heat generated thereon. EX1001, 1:64-66. The combination would have been obvious because it merely applies known techniques to solve known problems with predictable results. EX1002, ¶123, 158-159.

As Dr. Baker further explains, even without the admission in the specification that it is "typical" a POSITA would have understood that attaching a heat dissipating means to a PCB/circuit board was well known in the art. EX1002, ¶¶124.

A POSITA would have been motivated to use the enhanced cooling means of Isoda based on the express teachings of Isoda that a plurality of heat fins should be used to enhance heat dissipation in similar LED backlights and circuits. A POSITA would have understood that the rate at which heat can be dissipated by a metallic heat sink in Isoda (and in this art in general) is a function of (among other things) the surface area of the contact between the heat sink and the air into which the heat sink is dissipating heat. A larger contact surface between the air and the heat fins would improve the cooling effects of the heat fins. A POSITA would have understood that Isoda's plurality of heat fins will increase that surface area and contact surface with the air around the heat fins, therefore, improve the heat dissipating capabilities of the heat sink. A POSITA would have recognized that increasing surface area to dissipate more heat would have been especially important in a small form factor portable phone or other small electronic device which would have minimal surface area to dissipate heat. Further, a POSITA would have understood that a predictable result from adding heat fins to either side of motherboard 50 of Uekusa would be greater heat dissipation. EX1002, ¶125.

A POSITA also would have been motivated to enhance heat dissipation to address the known problem in the art of heating issues that plague LEDs and associated circuitry which lead to the degradation of the LEDs. EX1002, ¶126.

A POSITA would have had a reasonable expectation of success in making the combination. As noted above, the 842 patent admits mounting a heat means under a PCB is the "typical" configuration. Uekusa teaches that the entire LED 30 is mounted through a hole 51 which then has extension part 41 and mounted portion 42 extending beyond the end of the motherboard. This additional space beyond the motherboard would allow for fins to be mounted on either side of motherboard 50 next to the extension 41 of LED 30. Adding the fins there would have been obvious to a POSITA because the motherboard would be attached to electrical components that generate heat in addition to the LED 34 and locating the fins on the motherboard would allow the fins to dissipate heat from other components, also taking advantage of the small form factor. Further, a POSITA would have understood that locating the fins on the same side of the motherboard as the extension part would ensure that the form factor could remain small, as the invention in Uekusa teaches the backlights can be used for small form factor devices including portable phones and other small electronic devices. A POSITA would have understood that depending on the physical constraints of the electrical device the LED and motherboard are located in (and the amount of heat being generated by the LED 30), there would be space on the opposite side of motherboard 50 for heat fins that would be beneficial in dissipating heat generated by the LED 30 and other components attached to the motherboard in order to

prevent degradation of LED 30 and other components. A POSITA would have understood that the eventual location of a heat sink is a pragmatic concern that depends on the use case including the form factor, what other components are disposed on the PCB, and the size of the heat sink. POSITA also would have included a heat conductive member to efficiently move the heat generated by LED 34 to the cooling member attached to the motherboard. A POSITA would have understood that in order to efficiently dissipate heat from the circuit board and attached components, they could use an Isoda heat radiation pattern 40c which could be attached to either side of the circuit board to efficiently transfer heat from the motherboard to the heat fins. EX1005, Figs. 3-4, 6-9, 4:30-37, 4:49-5:2, 5:22-33, 5:44-55. A POSITA would have known that circuits like LED driver circuitry can produce substantial heat, particularly if they are driving multiple LEDs like the circuit would when being used to backlight an LCD screen. A POSITA would have known that such circuitry (like any processor) would often use supplemental heat sinking capabilities like a metallic heat sink. Isoda teaches the relevant implementation details and adding a plurality of heat fins is a well-known way in the art to enhance heat dissipation. EX1002, ¶127.

A POSITA would have understood that a component can be used to conduct both electricity and heat, and that a component does not have to conduct only one of electricity or heat. Isoda discloses conductive member 21f which conducts both

heat and electricity in Figure 9. EX1005, Fig. 9, 5:55-6:06. A POSITA would have understood that if there is no heat conductive member, Uekusa substrate electrode 33a and 33b, circuit electrode 52a and 52b, front wire 35, and/or solder 53 would be able to conduct heat to motherboard 50, given that they can be made of metal which is a good conductor for both heat and electricity, to conduct heat to the fins. Isoda discloses wide solder 43 in Figure 6 which, in combination with heat radiation pattern 40c, "efficiently radiates heat". *Id.*, Fig. 6, 5:22-33. As discussed by Dr. Baker, a Weindorf shows a heat sink operating as a common ground was a known technique in the art. A POSITA would be motivated to utilize other components to conduct heat to the heat dissipating fins in order to decrease the cost and complexity of manufacture. EX1002, ¶128 (discussing EX1007, [0039]-[0044]).

Using the heat fins taught in Isoda to connect to motherboard 50 and Isoda heat dissipating plates 41 to enhance heat dissipation were known techniques that would yield predictable results and involve only routine skill. EX1002, ¶129.

B. Claim 3

1. [3pre]

See Ground 1, [3pre]; EX1002, ¶130.

2. [3a]

See Ground 1, [3a]; EX1002, ¶131.

3. [3b]

See Ground 1, [3b]; EX1002, ¶132.

4. [3c]

The combination discloses and renders obvious "a light emitting device (LED 34) disposed on the first portion of the fastener (Uekusa 1VP Upright Portion 32 and Isoda heat conducting member 21c and 21e) for emitting a light toward the light guiding plate (55)." EX1004, Figs. 1-8, [0006], [0031] (light emitting diode 8), [0037], [0043]-[0047], [0059], [0061] (light emitting diodes are arranged in a direction that is perpendicular to light guide plate 5). *See* Ground 1, [3c]; EX1002, ¶133.

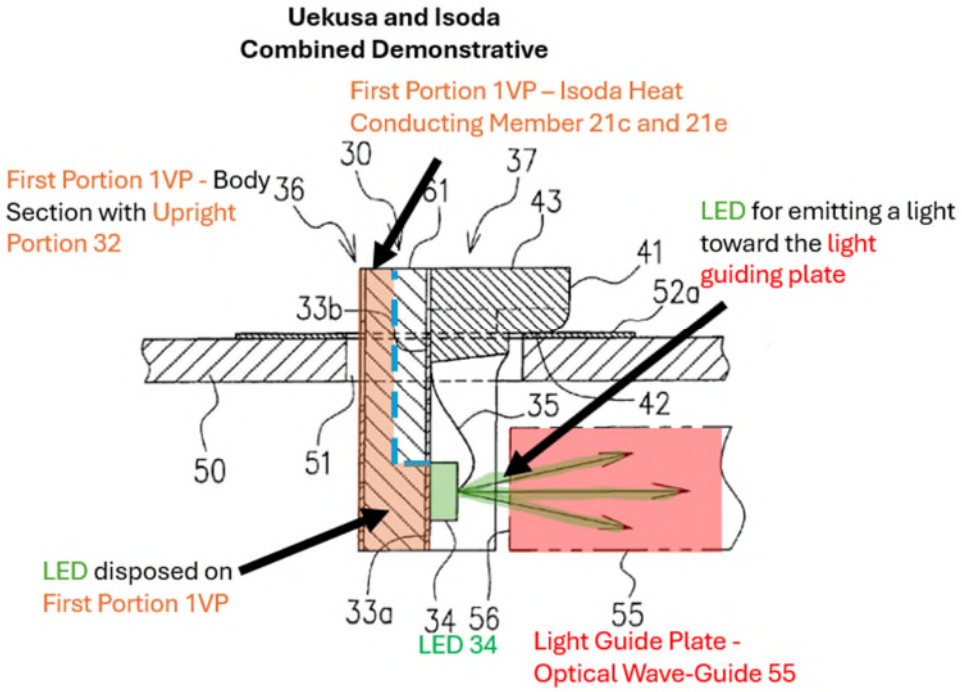

As shown in Uekusa and Isoda Combined Demonstrative above, the combination renders obvious that LED 34 could be "directly disposed" on first portion (1VP upright portion 32 and Isoda heat conducting member 21c and 21e) of body section 36 for emitting light toward the side of light guiding plate 55. A POSITA have understood that the combined demonstrative above is but one obvious arrangement and that the placement of the conducting member could be modified. Uekusa teaches the LED 34 is used as a light source for the optical wave-guide 55 in a backlight of a liquid crystal display, and that the light emitted from LED 34 is directed toward a guiding end surface 56 and goes straight in the optical wave-guide 55. *Id.* 5:23-33; EX1002, ¶134.

Isoda teaches that it is desirable to directly mount an LED 33 to an exposed portion of heat conductive member (21c and 21e) through a hole in circuit substrate 31 to directly conduct heat to cooling member 41 and heat fins 41a, while connecting the LED to circuit substrate via conducting wires 34a and b. EX1005, Figs, 7-8, 4:7-30, 4:47-60, 4:61-5:02, 5:34-54; EX1002, ¶135.

A POSITA would have found it obvious to integrate a heat conducting member into upright portion 32 in Uekusa. Uekusa teaches that 32 is made of glass epoxy resin material which would not be a good heat conductor. A POSITA would have been motivated to add a heat conductive member which would enhance heat transfer as explicitly taught by Isoda. EX1008, 3:48-4:10; EX1002, ¶136.

Under a narrow interpretation of "disposed on" a POSITA would have been motivated to combine Uekusa and Isoda to directly mount Uekusa LED 34 through a hole in Uekusa substrate electrode 33a to Isoda's heat conducting members 21c and 21e in upright portion 32. A POSITA would have understood that they could run the heat dissipating member behind electrode 33a (being careful not to connect to 33b and create a short) and utilize either an electrical connection between 21c and 21e and Uekusa substrate electrode 33a, or wires, to connect the LED to Uekusa substrate electrodes 33a and 33b, as taught by front wire 35 and the Isoda conducting wires 34a and 34b. Thus, LED 34 would be "directly disposed" conducting members 21c and 21e which are a part of upright portion 32. Because such a modification requires routine skill which would lead to predictable results, a POSITA would have had a reasonable expectation of success in making the combination. EX1002, ¶137.

C. Claim 4

The combination discloses or renders obvious "The backlight package as claimed in claim 3 (*see* Ground 1, claim 3; Ground 2, claim 3), wherein the second portion extends above the light guide plate." *See* Ground 1, claim 4; EX1002, ¶138.

D. Claim 5

The combination discloses "The backlight package as claimed in claim 3 (*see* Ground 1, claim 3; Ground 2, claim 3), further comprising a circuit board (motherboard 50) and a conducting wire (Uekusa substrate electrodes 33a and 33b, front wire 35, and Isoda conducting wires 34a and 34b) the circuit board (50) connecting the second portion (horizontal portion 2HP mounted portion 42 and extension part 41), and the conducting wire (Uekusa 33a, 33b, 35, Isoda 34a, and 34b) electrically coupling the light emitting device (LED 34) to the circuit board (50)." EX1008, Figs. 1-8, 3:54-4:03, 4:11-21, 4:61-5:04, 5:5-11, 5:43-54, 5:66-6:06; *see* Ground 1, claim 3, 5; Ground 2, claim 3; EX1002, ¶139.

In addition to the mappings in Ground 1, claims 3 and 5, and as described *supra* Ground 2, claim 3, it would have been obvious for a POSITA to electrically couple LED 34 to motherboard 50 through either (1) Isoda's heat conducting member 21c and 21e being electrically connected to Uekusa substrate electrode 33a or (2) adding Isoda conducting wires to 34a and 34b to connect to substrate electrode 33a. As described *supra* Ground 1, claims 3 and 5, electrically connecting LED 34 to substrate electrode 33a electrically couples LED 34 to motherboard 50; EX1002, ¶140.

E. Claim 6

The combination discloses or renders obvious "The backlight package as claimed in claim 3 (*see* Grounds 1 & 2, claim 3), further comprising a circuit board (motherboard 50) and a heat dissipating means (Isoda heat plates 41 and 41a), the circuit board (50) connecting the second portion (2HP), and the heat dissipating means (Isoda heat plates 41 and 41a), attached onto the surface of the circuit board (50) for conducting a heat generated thereon." *See* Ground 1 & 2, Claim 5; EX1002, ¶141.

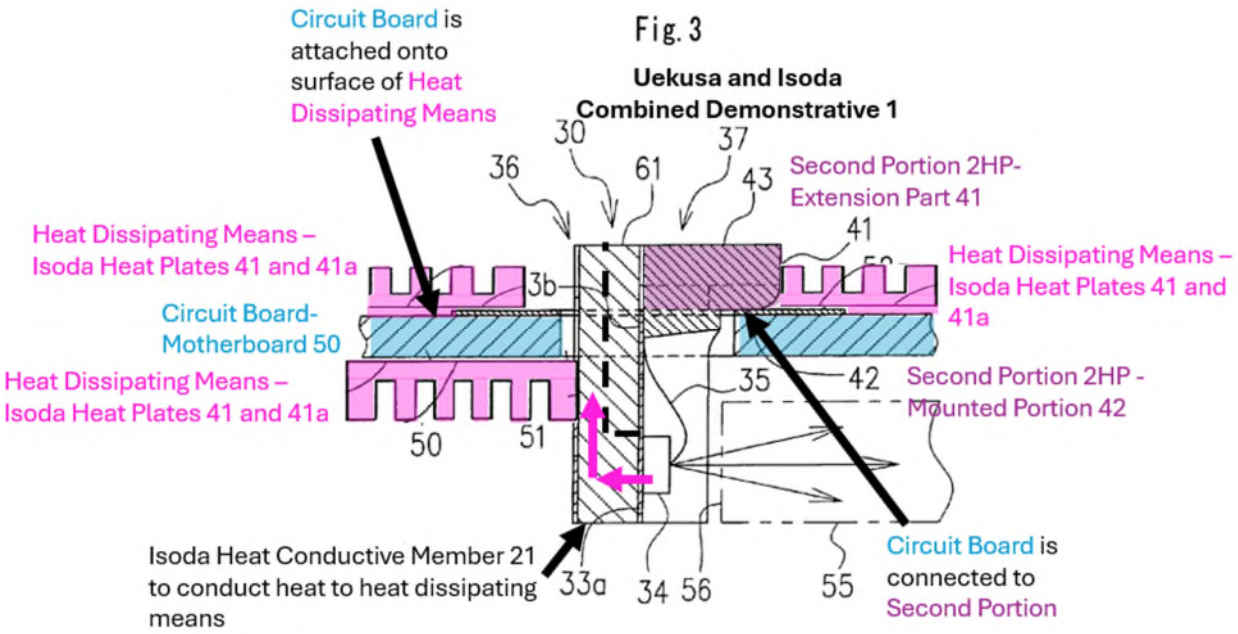

Uekusa and Isoda Combined Demonstrative 2

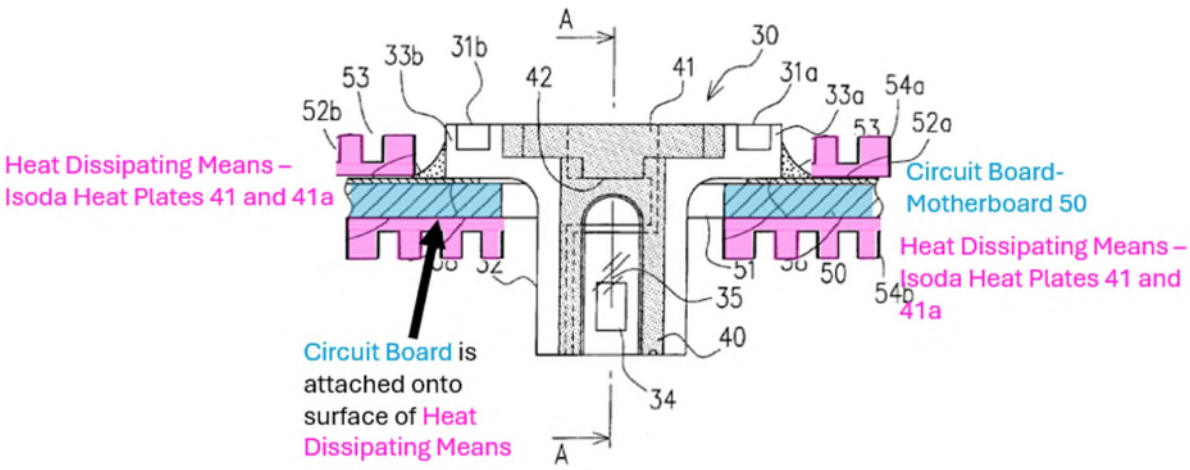

As shown in Uekusa and Isoda Combined Demonstratives 1 and 2 above, Uekusa discloses motherboard 50 connecting the horizontal portion 2HP mounted portion 42 and extension part 41. *See* Ground 1, claims 3, 5, Ground 2, claims 3, 5. Combined demonstratives 1 and 2 show exemplary arrangements that would have been obvious to a POSITA. A POSITA would have understood that the path for conducting heat in demonstrative 1 and the locations of the heat dissipating means in demonstrative 2 could differ. EX1002, ¶142.

It would have been obvious to a POSITA to modify Uekusa to include Isoda's heat dissipating fins 41 mounted on motherboard 50 to enhance the heat dissipation by motherboard 50 by enhancing the conduction of heat away from LED 34 and the other electronic circuits on motherboard 50. *See* Section VI.A (combination); EX1002, ¶143.

FIG. 2

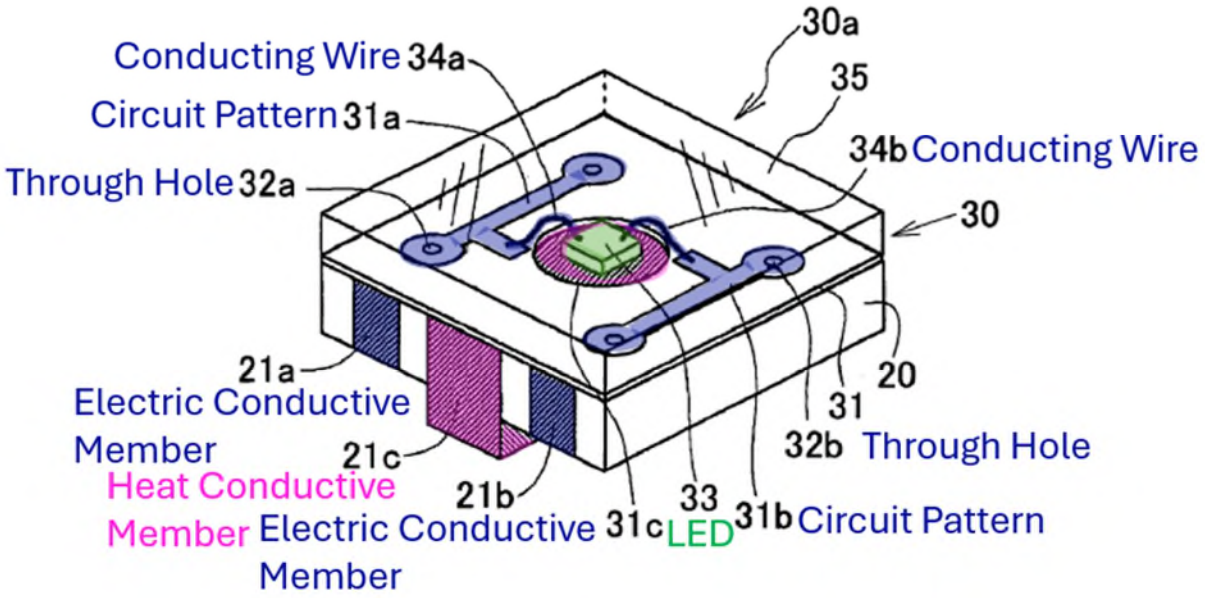

Isoda discloses in Figures 2 and 3 above a surface mounted LED 33 with heat conductive member 21c, which conducts heat to heat fins 41a. EX1005, Figs. 2-3, 4:07-25, 4:30-38, 4:39-60; 4:61-5:07. Specifically, LED 33 is attached to heat conductive member 21c and substrate 40. *Id.* The heat generated by LED 33 is transmitted via member 21c to cooling member 41 and is dissipated by cooling fins 41a. *Id.* EX1002, ¶144.

It would have been obvious to use this arrangement to enhance heat transfer from Uekusa's surface mounted LED 34, via a similar heat conductive member in upright portion 32, through motherboard 50. Uekusa teaches that 32 is made of glass epoxy resin material which would not be a good heat conductor. A POSITA would have been motivated to add a heat conductive member which would

enhance heat transfer as explicitly taught by Isoda EX1008, 3:48-4:10; EX1002, ¶145.

FIG. 7

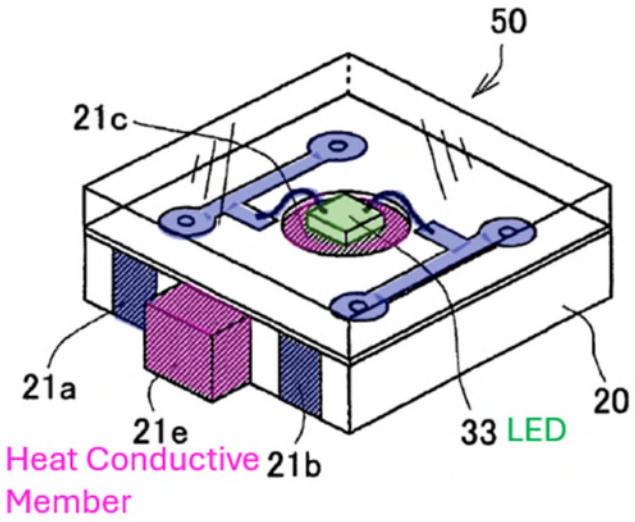

FIG. 8

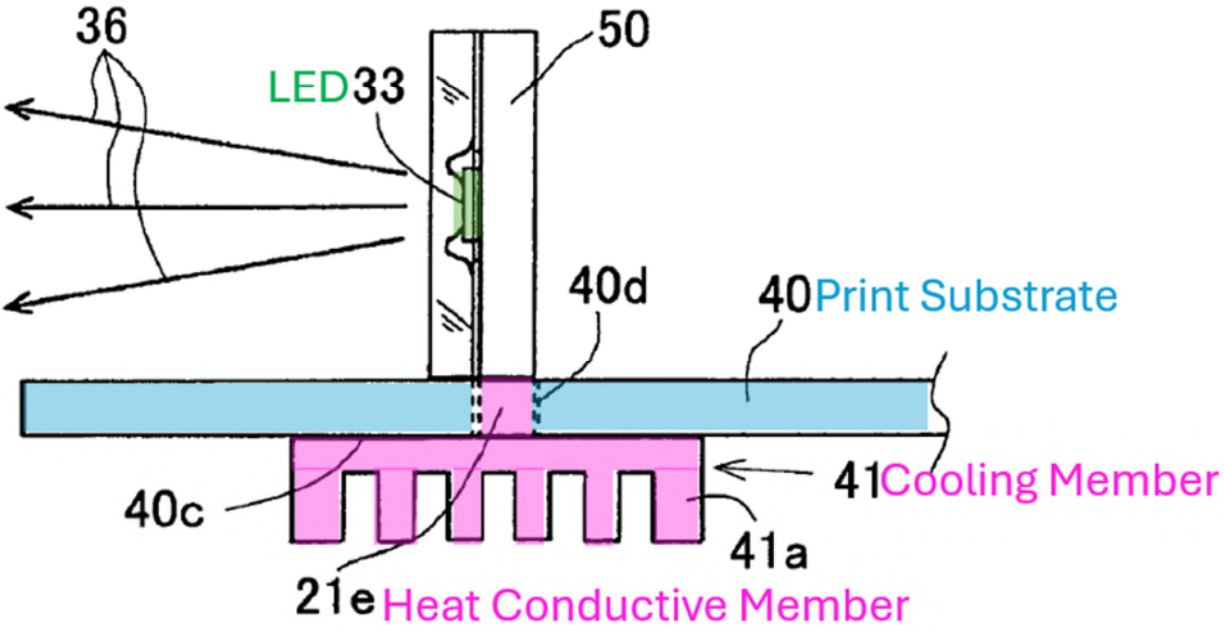

Similarly, as shown in annotated Figures 7 and 8 above, Isoda discloses LED 33 is thermally attached to print substrate 40 which is connected to cooling member 41 with cooling fins 41a in order to dissipate heat from the LED and other electronic components attached to the motherboard. EX1005 Figs. 7-8, 5:34-54. The same reference numerals in Figures 2, 3, and 4 are applicable to Figures 7 and 8. *Id.* Heat from LED 33 is conducted via projection 21e and heat radiating pattern 40c to cooling member 41 with cooling fins 41a. *Id.* This teaching of Isoda confirms to a POSITA that the enhancement of heat transfer of Isoda is applicable to configurations where the heat transfer flows from an LED through a first vertical portion and into a second horizontal portion, similar to Uekusa. EX1002, ¶146.

Alternatively, a POSITA would have been motivated to utilize some of the same components for both heat dissipation and electricity conduction. Isoda discloses conductive member 21f which conducts both heat and electricity in Figure 9. EX1005, Fig. 9, 5:55-6:06. A POSITA would have understood that if there is no heat conductive member, the substrate electrode 33a and 33b, circuit electrode 52a and 52b, front wire 35, and solder 53 would be able to conduct heat to motherboard 50, given that they can be made of metal which is a good conductor for both heat and electricity, to conduct heat to the fins. *See* Section VI.A (Combination Rationale). Isoda discloses wide solder 43 in Figure 6 which, in combination with heat radiation pattern 40c, "efficiently radiates heat". *Id.*, Fig.

6, 5:22-33. A POSITA would be motivated to utilize other components to conduct heat to the heat dissipating fins in order to decrease the cost and complexity of manufacture. EX1002, ¶147.

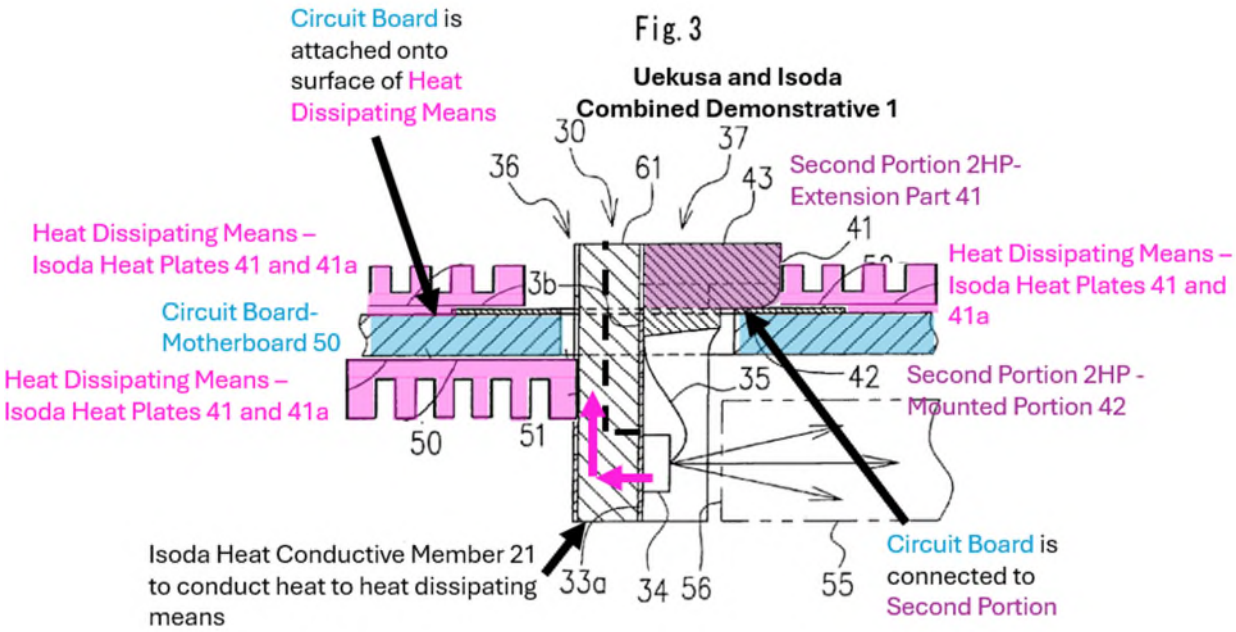

A POSITA would have understood that Isoda teaches an enhanced method for cooling LEDs using heat fins 41a to eventually transfer heat from LEDs and other electronic components attached to the motherboard to the air. A POSITA would have further understood those teachings are directly applicable to improve the flow of heat from Uekusa Fig. 3 (illustrated in Uekusa and Isoda Combined Demonstrative 1 above), through motherboard 50 and upright portion. EX1002, ¶148.

Alternatively, a POSITA would have been motivated to utilize substrate electrode 33a and 33b, circuit electrode 52a and 52b, front wire 35, and/or solder

53 to conduct heat to be dissipated on the attached heat fins. A POSITA would have been motivated to utilize the cooling member described in Isoda with the motherboard 50 of Uekusa to dissipate heat and improve device and LED operation as shown above in annotated Figure 3. *See* Section VI.A (Combination Rationale); EX1002, ¶149.

F. Claim 7

1. [7pre]

See [3pre]; EX1002, ¶150.

2. [7a]

See [3a]; EX1002, ¶151.

3. [7b]

See [3b], [4]; EX1002, ¶152.

4. [7c]

See [3c]; EX1002, ¶153.

5. [7d]

See Claims 5; EX1002, ¶154.

6. [7e]

See Claim 5; EX1002, ¶155.

G. Claim 8

See [3b], [7b]; EX1002, ¶156.

H. Claim 9

See Claims 6,7; EX1002, ¶157.

VII. GROUND 3: UEKUSA, AAPA

A. Combination Rationale

A POSITA would have been motivated to add, and had a reasonable expectation of success in adding, a "typical" heat sink underneath Uekusa's motherboard 50, as admitted in the AAPA. *See supra* Section VI.A (Ground 2, Combination Rationale related to AAPA). EX1002, ¶¶ 123, 158-159.

B. Claim 6

The combination discloses or renders obvious "The backlight package as claimed in claim 3 (see Ground 1, claim 3), further comprising a circuit board (motherboard 50) and a heat dissipating means (Plates 23 and 36), the circuit board (50) connecting the second portion (2HP), and the heat dissipating means (Plates 23 and 36), attached onto the surface of the circuit board (50) for conducting a heat generated thereon." *See* EX1001, Figs. 2-3, 1:51-2:5, 2:6-11; Ground 1, claims 3, 5; EX1002, ¶160.

As described *supra* combination rationale and Uekusa/Isoda, a POSITA would have been motivated to add heat fins underneath motherboard 50 as is "typical" in the AAPA. *See supra* Section VI.A (Combination Rationale). EX1002, ¶161.

C. Claim 9

The combination discloses or renders obvious "The backlight package as claimed in claim 7, further comprising a heat dissipating means attached onto the surface of the circuit board for conducting a heat generated thereon." *See* Claim 6; *see* Ground 1, claims 6, 7; EX1002, ¶162.

VIII. GROUND 4: KUROKAWA ANTICIPATION

A. Claim 3

1. [3pre]

Kurokawa discloses "A backlight package comprising." *See* EX1004, Figs. 1-7, [0001], [0030] (the lighting device functions as a backlight for the liquid crystal display); *see* [3a]-[3c], [7]; EX1002, ¶163.

2. [3a]

Kurokawa discloses "a light guiding plate (light guiding plate 5) having a first side (side 5a)." EX1004, Figs. 1-7, [Abstract], [0006], [0009], [0014], [0031], [0032], [0035]-[0036], [0049]-[0050]; EX1002, ¶164.

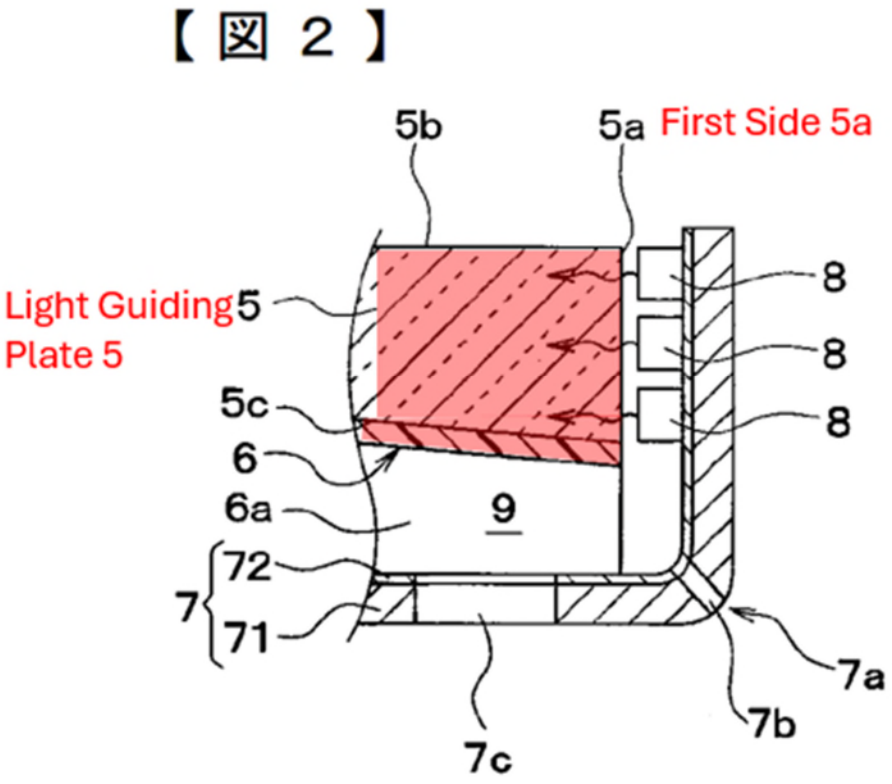

As shown above in annotated Fig. 2, Kurokawa discloses light guiding plate 5 has a first side 5a, which receives light emitted by LED 8, for emission through surface 5b for the purposes of providing backlighting for an LCD. *Id*., [0044]; EX1002, ¶165.

3. [3b]

Kurokawa discloses "a first fastener (metal plate 71) having a first portion (1VP) and a second portion (2HP), the first portion disposed adjacent to the first side (5a) of the light guiding plate (5), wherein the first portion and the second portion are arranged in a substantially perpendicular relationship to form a

substantially L-shaped structure." EX1004, Figs. 1-7, [Abstract], [0009], [0020]-[0021], [0037]-[0039], [0047], [0056], [0058], [0060]; EX1002, ¶166.

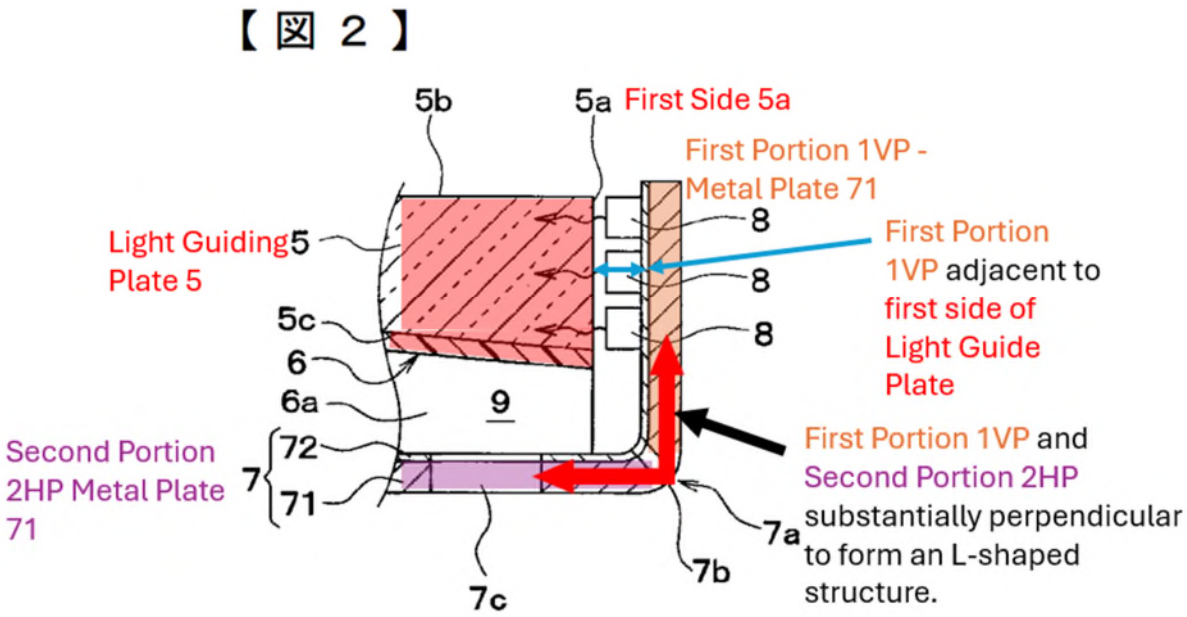

As shown in annotated Fig. 2 above, metal plate 71 is comprised of a first vertical portion (1VP) and a second horizontal portion (2HP), with the first vertical portion disposed adjacent to the first side 5a of a light guiding plate 5, and the first portion and the second portion are arranged in a substantially perpendicular relationship to form a substantially L-shaped structure. Kurokawa teaches using this L-shaped arrangement allows for placement of additional LEDs to easily increase the brightness and luminance of the device [0014], allows for the use of less expensive surface mount LEDs [0012], improves thermal dissipation by utilizing a metallic printed wiring board [0011], reduces risk of damage from

thermal expansion [0050], enhances thermal dissipation [0048], and efficiently uses space. *Id.*, [0027]; EX1002, ¶167.

【図 2】

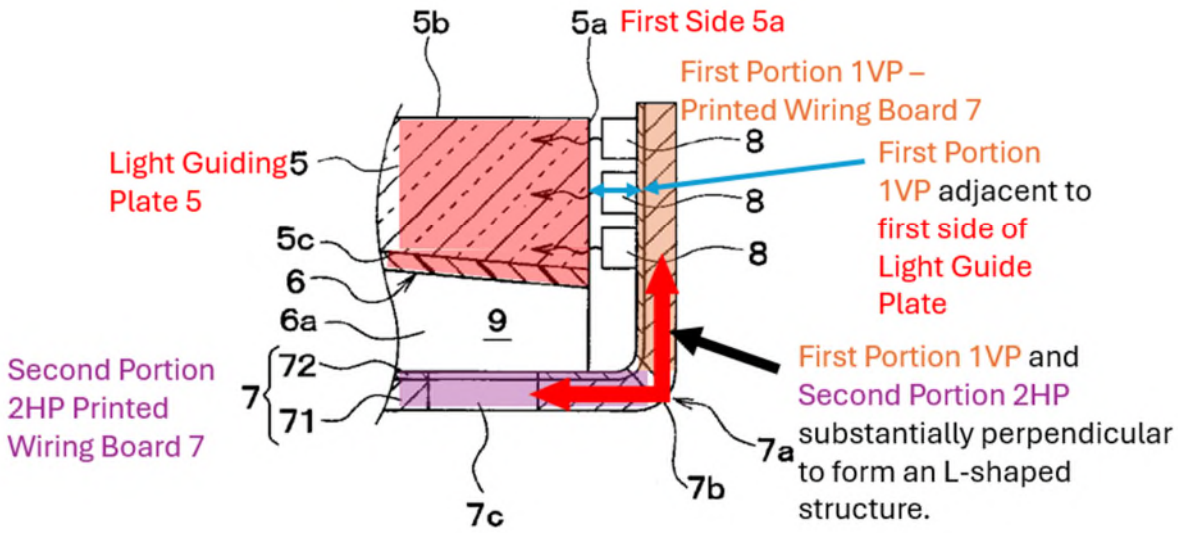

As a first alternative, discussed further *infra.* [3c] (narrow construction of "disposed on"), the first fastener is printed wiring board 7 (the combination of metal plate 71 and flexible printed wiring board 72) for one or both of the first vertical portion and second horizontal portion, which would also satisfy this limitation. EX1002, ¶168.

As a second alternative, discussed further *infra*. [3c] and [4] (ordinary meaning of "above"), the first fastener is cover 1. EX1004, Fig. 1, [0032]. As shown in annotated Figure 1 below, Kurokawa discloses "a first fastener (cover 1) having a first portion (1VP) and a second portion (2HP), the first portion disposed adjacent to the first side (5a) of the light guiding plate (5), wherein the first portion

and the second portion are arranged in a substantially perpendicular relationship to form a substantially L-shaped structure." EX1002, ¶169.

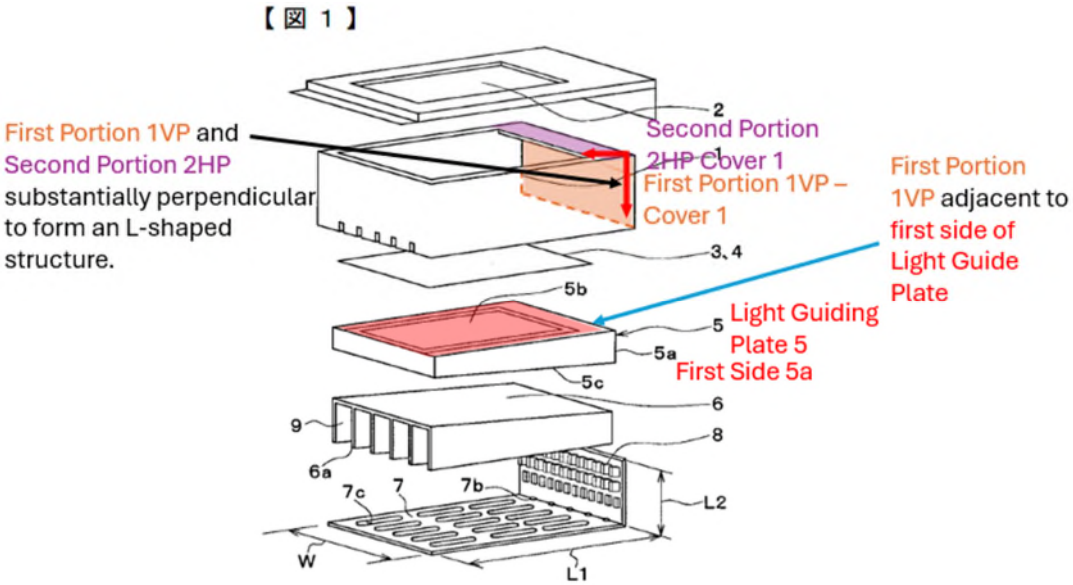

Kurokawa discloses that cover 1 is a fastener in that all of the other components "are built into and held in place by the cover 1." EX1004, [0032]; EX1002, ¶170.

4. [3c]

Kurokawa discloses "a light emitting device (LED 8) disposed on the first portion of the fastener (VL1) for emitting a light toward the light guiding plate (5)." EX1004, Figs. 1-7, [0006], [0031], [0037], [0043]-[0047], [0059], [0061]; EX1002, ¶171.

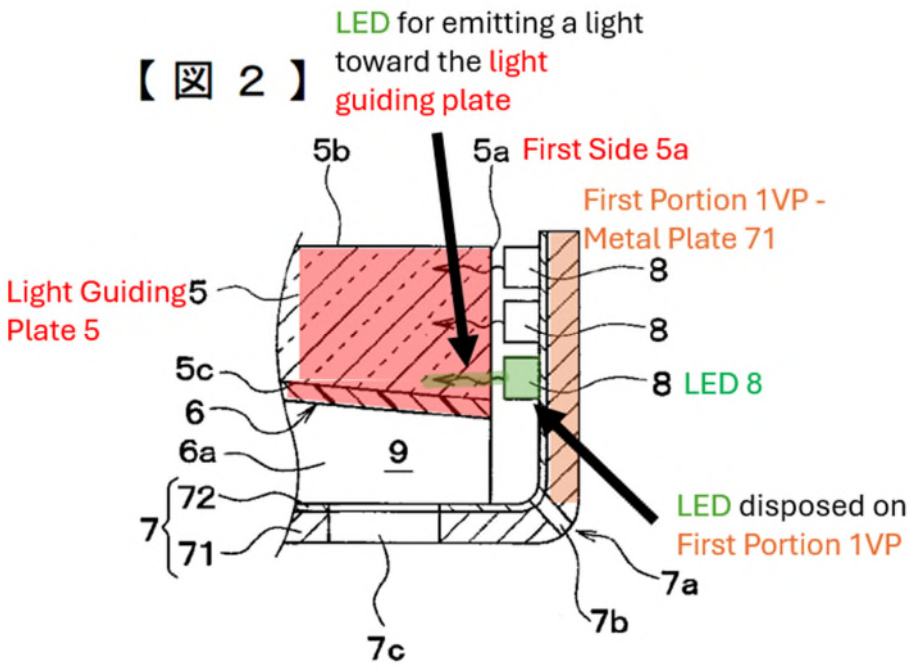

As shown above in annotated Fig. 2, Kurokawa discloses LED 8 disposed on first portion (VL1) of fastener metal plate 71 for emitting light toward side 5a of light guiding plate 5. Kurokawa teaches the LED should be as close to side 5a as possible for efficient light emission [0049] but far enough to prevent any contact between side 5a and LEDs 8 caused by thermal expansion of light guiding plate which could damage the LEDs. *Id.*, [0050]; EX1002, ¶172.

LED 8 is mounted directly to printed wiring board 72, which in turn is bonded to metal plate 71. *Id.*, Fig. 2, [0037]-[0040]. Thus, LED 8 is directly disposed on printed wiring board 72 and indirectly disposed on metal plate 71. EX1002, ¶173.

Under a broad interpretation of "disposed on"—encompassing both directly disposed on and indirectly disposed on—LED 8 is indirectly disposed on metal

plate 71. A broad interpretation is consistent with the ordinary meaning of "disposed on," which includes both indirectly and directly disposed on, particularly in the context of a "comprising" claim like claim 3 described further *supra* Section V.A.4 (Uekusa [3c]). EX1002, ¶174.

Under that broad interpretation, LED 8 is indirectly disposed on metal plate 71 via printed wiring board 72. EX1002, ¶175.

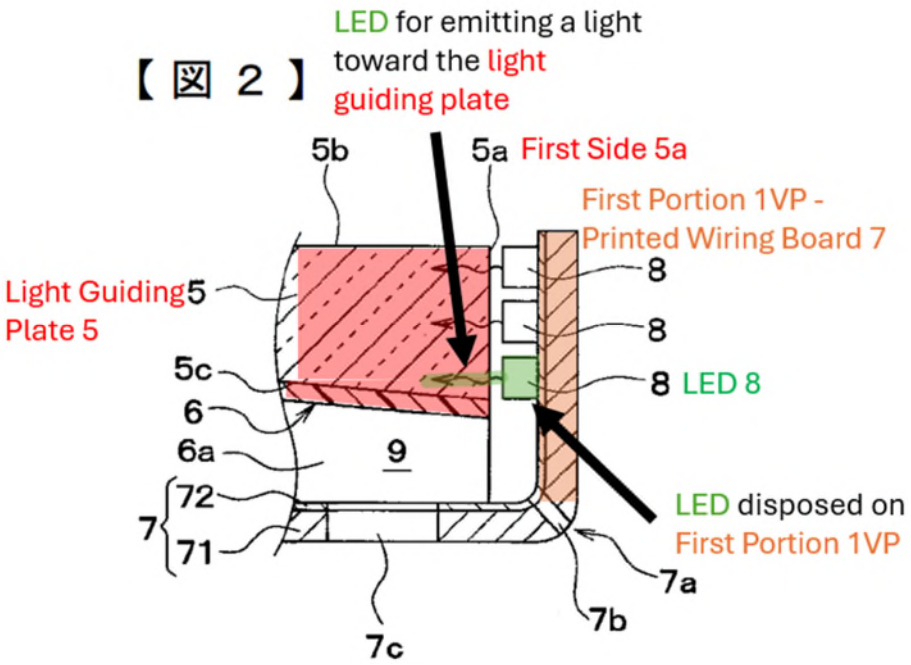

The first alternative (*see* [3b] (board 7)), discloses this limitation under a narrow interpretation of "disposed on" that requires the LED be directly disposed on the first portion. As noted above for [3b], Kurokawa discloses that the combination of board 72 and 71 can be considered a single structure, board 7, and the LED is "directly" disposed on the first vertical portion of board 7. EX1004, Fig. 2, [0009]. The specification of Kurokawa refers to board 7 as a singular

component in addition to referring to its two subcomponents, and even indicates that in some embodiments, board 7 is comprised only of metal plate 71 or only of flexible printed wiring board 72. *Id.*, Fig. 2, [0009], [0021], [0024], [0026], [0027]. Flexible printed wiring board 72 and metal plate 71 can be made to adhere to each other by bonding with an adhesive or thermocompressing the insulating layer of 72 to 71. *Id.* [0038]. Thus, even under a narrow "directly disposed on" interpretation, this limitation is satisfied by Kurokawa. EX1002, ¶176.

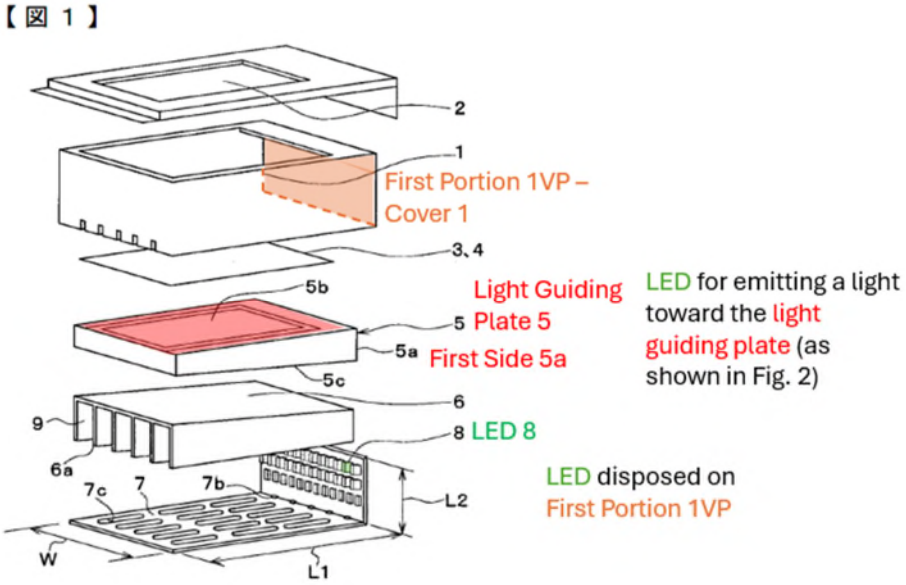

The second alternative (*see* [3b] (cover 1); annotated Fig. 1 above) discloses this limitation under a broad interpretation of "disposed on." Kurokawa discloses LED 8 is indirectly disposed on the first vertical portion 1VP of cover 1. EX1004, Figs. 1, 2, [0032]. Kurokawa discloses all of the components are "built into and held in place by the cover 1." *Id.* A POSITA would have understood that LED components on the vertical portion of 7 are disposed on Cover 1VP. *Id.* Without 1

and 7 connecting together, the other components would not be "built into and held in the place" as described in the specification. EX 1004 Figs. 1, 2, [0032]. Thus, a POSITA would have understood that LED was indirectly disposed on the first vertical portion 1VP of cover 1 via board 72 and plate 71, which are built into and held in place by the first vertical portion 1VP of cover 1. EX1002, ¶177.

B. Claim 4

Kurokawa discloses "The backlight package as described in claim 3 (*see* claim 3), wherein the second portion (2HP) extends above the light guiding plate (light guiding plate 5)." EX1004, Fig. 2, [0017], [0052], [0032], [0041]; EX1002, ¶178.

【図 2】

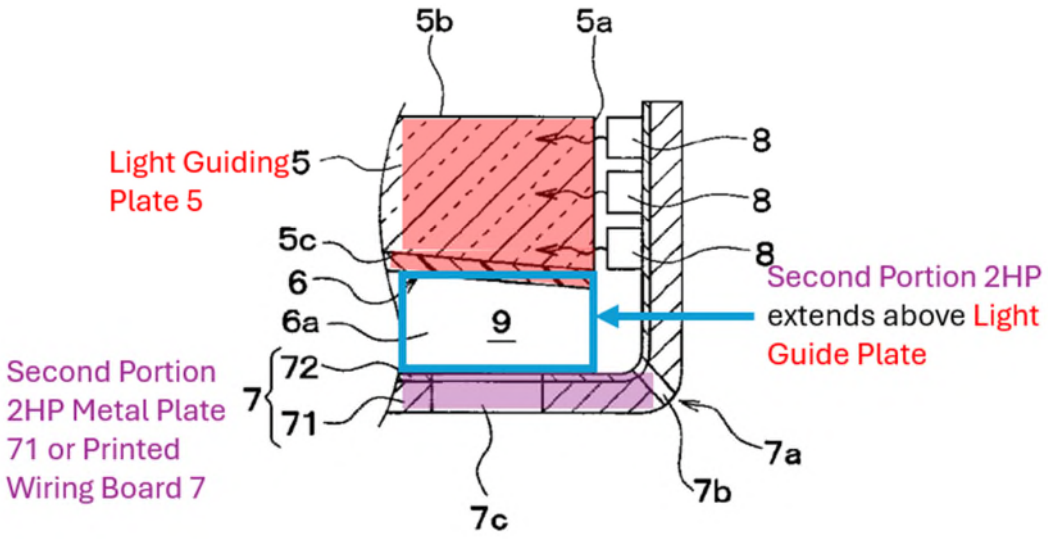

As shown in annotated Figure 2 above, Kurokawa discloses the second horizontal portion 2HP of metal plate 7 or 71 is displaced vertically from and

overlaps with a portion of light guiding plate 5. Thus, Kurokawa discloses this limitation under the alternative construction in the same manner as the only disclosed embodiment in the 842 patent. Kurokawa discloses this under either the broad or narrow construction of disposed on. *See* claim [3b]. Kurokawa renders this limitation obvious under the ordinary meaning of "above" as explained in Ground 5, claim 4. EX1002, ¶179.

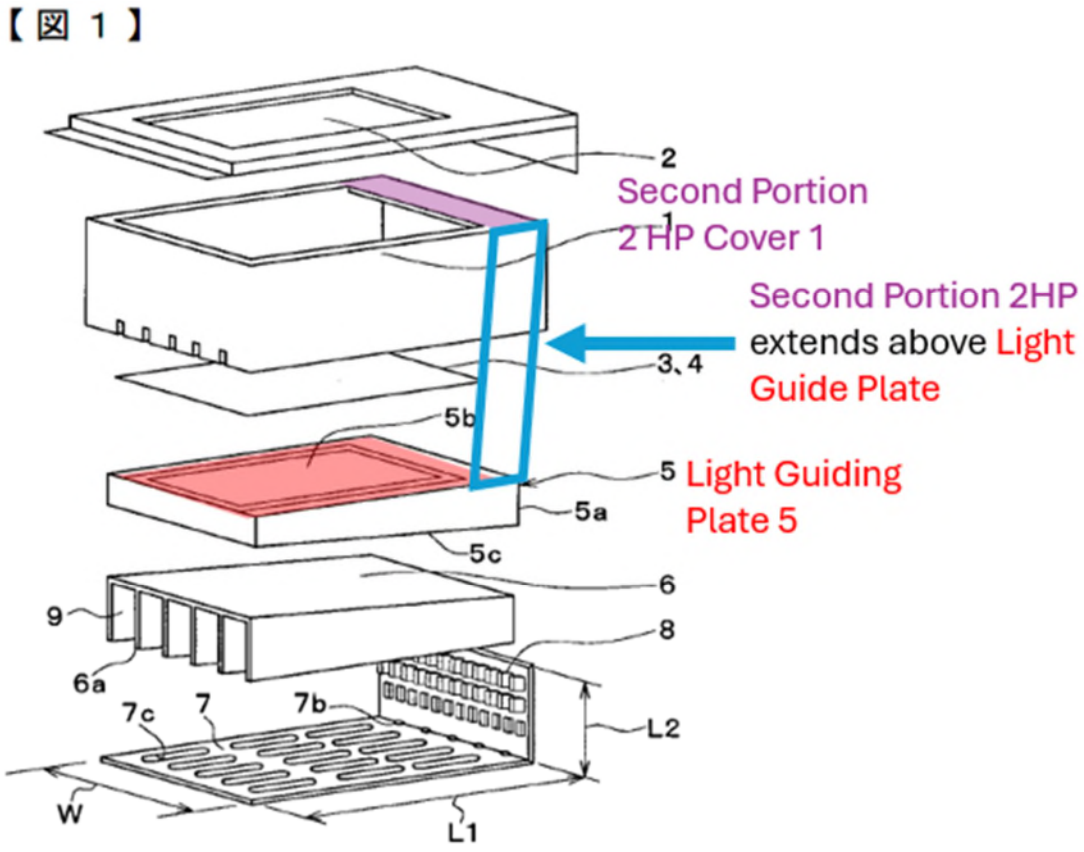

As to the second alternative (*see* [3b-c] (cover 1); annotated Fig. 1 above), the second horizontal portion 2HP of cover 1 extends above a portion of light guiding plate 5. EX1004, Figs. 1-4, [0032]. A POSITA would have understood that Figure 1 illustrates that Cover 2HP covers the edge of light guide plate 5 that is not

covered by optical sheet 3 and diffusion sheet 4. A POSITA would have known that Cover 2HP covering the light guide plate 5 is required to prevent light from LEDs 8 from by-passing sheets 3 and 4. Kurokawa discloses this limitation under the ordinary meaning of "above" and the alternative construction since the second horizontal portion 2HP is illustrated extending "above" a portion of the light guiding plate 5. EX1002, ¶180.

C. Claim 5

Kurokawa discloses "The backlight package as claimed in claim 3 (*see* claim 3), further comprising a circuit board (flexible printed wiring board 72) and a conducting wire (printed conductor pattern), the circuit board (72) connecting the second portion (second portion 2HP metal plate 71), and the conducting wire (printed conductor pattern) electrically coupling the light emitting device (LED 8) to the circuit board (72)." EX1004, Figs. 1-7, [0021], [0038], [0043], [0047]; *see* Claim 3; EX1002, ¶181.

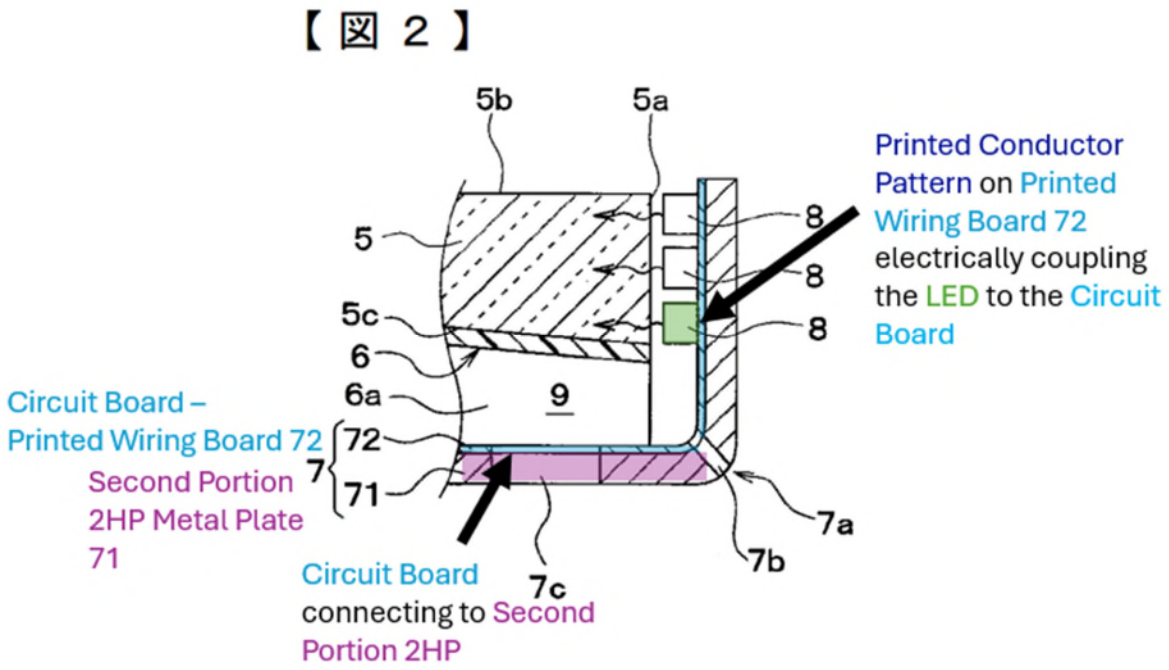

As shown above in annotated Figure 2, Kurokawa discloses printed wiring board 72 connecting the second horizontal portion 2HP of metal plate 71. Flexible printed wiring board 72 and metal plate 71 can be made to adhere to each other by bonding with an adhesive or thermocompressing the insulating layer of 72 to 71. *Id.* [0038]. Kurokawa discloses printed wiring board 72 may be any type common in the art, such as an insulating film with a printed conductor pattern (not shown in Figure 2). *Id.* [0039]. Other types of wiring boards could be used. *Id.*, [0060]. A POSITA would have understood that conducting wires include printed conductor patterns, metal traces, or other electrically conductive materials. EX1002, ¶182.

Printed wiring board 72 is also connecting first vertical portion 1VP of metal plate 71, and LED 8 are surface mounted on that portion of the printed wiring board 72. *Id.* [0043]. Kurokawa discloses the other electronic circuits, including

the LED drive circuits, are mounted on the portion of the circuit board 72 proximate to 2HP to efficiently use space. *Id.*, Fig. 4, [0044] (LED drive circuit), [0057] (resistor), [0059] (all other electronics). A POSITA would have understood Kurokawa to teach that printed conductor patterns (wires) electrically couple the LEDs to the portion of the printed wiring board 72 proximate to 2HP where all the other electronics are located, so that the LEDs can be driven by those electronics. EX1002, ¶183.

D. Claim 6

Kurokawa discloses "the backlight package as claimed in claim 3 (*see* claim 3), a circuit board (flexible printed wiring board 72) and a heat dissipating means (metal plate 71), the circuit board connecting the second portion (2HP metal plate 71) and the heat dissipating means (71) attached onto the surface of the circuit board (72) for conducting a heat generated thereon." EX1004, Figs. 1-7, [Abstract] [0005], [0010]-[0011], [0017]-[0018], [0020], [0021], [0037]-[0041], [0045], [0046], [0047], [0051]-[0052]; *see* Claim 3; EX1002, ¶184.

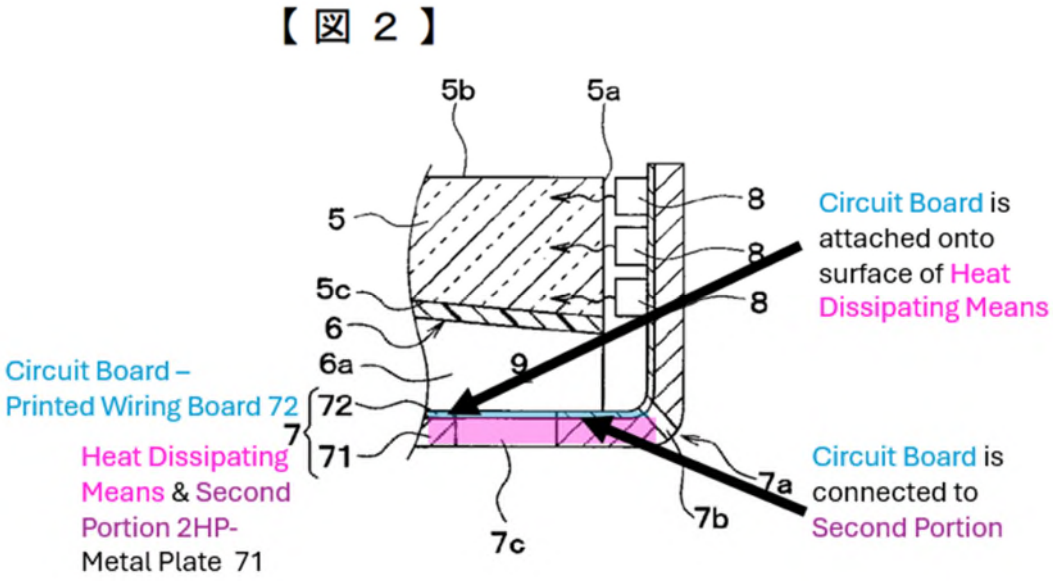

As shown above with respect to claim 5 and above in annotated Figure 2, Kurokawa discloses printed wiring board (72) connecting metal plate 71, including, specifically, portion 2HP. *See* Claim 5. Kurokawa discloses metal plate 71 is a heat dissipating means made of aluminum, copper, and iron, and that aluminum is particularly advantageous with respect to heat dissipating properties. EX1004, [0020]-[0021], [0037]-[0039], [0047]. EX1002, ¶185.

Under the broad construction, metal plate 71, including portion 2HP, is at least one heat dissipating plate corresponding to the claimed structure. EX1002, ¶186.

Under the narrow construction, metal plate 71, including portion 2HP, as disclosed in Kurokawa, is the equivalent of a plurality of heat dissipating plates. Metal plate 71 comprises portions 2HP and 1VP and portion 2HP includes

numerous ventilation holes 7c to improve heat dissipation. EX1004, Fig. 1, [0019]. Kurokawa teaches the bend of the plate increases the plate's total heat dissipating area to increase heat dissipation. Even though metal plate 71 is a single plate, because it is bent, portions 2HP and 1VP are equivalent to two metal plates (a plurality) from a heat dissipation perspective. An entirely flat plate would require an increased length to have the same area for heat dissipation. Thus, a bent plate allows for the same heat dissipation using two perpendicular surfaces in a different form factor, which is one of the functions of using multiple plates. EX1002, ¶187.

Kurokawa discloses the claimed function that heat produced by LEDs 8 (one of the electronic components on board (72)) is conducted through printed wiring board (72) to metal plate 71, and then conducted through metal plate 71, thereby dissipating that heat. EX1004, [0020]-[0021], [0037]-[0039], [0046]-[0047] (disclosing heat conduction through board 72 to metal plate 71, which has high thermal conductivity to efficiently conduct heat to increase heat dissipation). Kurokawa specifically calls out that the portion of board 7 corresponding to 2HP will conduct heat from the LEDs to increase heat dissipation, utilizing the entire "heat dissipation area (W x (L1 + L2))." *Id.*, Fig. 1, [0048]; EX1002, ¶188.

Additionally, Kurokawa discloses that all other electronic circuits, including the LED drivers and resistors used to drive the LEDs 8, are located on the portion of board (72) proximate to portion 2HP of metal plate 71. Fig. 4, [0023], [0027]

(all other electronics), [0044] (LED drive circuit), [0057] (resistor), [0059] (all other electronics). A POSITA would have understood that those other electronics, such as LED drivers and resistors, would also produce heat. A POSITA would have understood that the heat produced by those electronics would be dissipated into the air in heat dissipation space (9) along with the heat from LEDs 8. A POSITA would also have understood that the heat produced by those electronics would also have been conducted via board 72 to metal plate 71, particularly portion 2HP of metal plate 71, and then conducted and dissipated by metal plate 71. A POSITA would have understood that heat would have been sunk from those electronic components in the same manner as heat from the LEDs and for precisely the same reasons. A POSITA would have understood, based on the laws of thermodynamics, that heat will always be conducted (and thereby dissipated) from hotter to cooler portions. Thus, the heat from a localized source, such as a particular driver or resistor on board 72, will be conducted and dissipated to any cooler portions of the structures around it, including heat dissipation space 9, board 72, and plate 71. EX1002, ¶189.

Kurokawa illustrates electronic component 8a on the portion of board (72) proximate to 2HP of metal plate 71, and component 8a is illustrated relatively distant from the bend 7a and LEDs 8. EX1004, Fig. 4 (8a). This illustration and Kurokawa's teaching of a backlight for a rectangular vehicle display that is much

wider and longer than it is deep, discloses to a POSITA that there will be electronic circuits under the display area that will be far enough from the LEDs 8 to constitute localized heat sources. A POSITA would have understood that the heat produced by those local heat sources will be sunk through the air space 9, board 72, and portion 2HP of metal plate 71. EX1002, ¶190.

Claim 6, which depends from claim 3, requires a fastener (claim 3), a circuit board (claim 6), and heat dissipating means (claim 6), and under certain reads, metal plate 71 (or at least portions thereof) satisfies certain limitations related to the fastener and heat dissipating means. Nothing in claims 3 and 6 (or 7 or 9, *infra*) precludes metal plate 71 from satisfying both limitations. In contrast, claim 1 might preclude such a read, since claim 1 requires the heat dissipating means be disposed on the fastener, and it seems unlikely that one component could be disposed on itself. EX1001, Claim 1. Not all structures would necessarily satisfy both limitations, but Kurokawa's metal plate 71 does, as shown above in annotated Fig. 2. EX1002, ¶191.

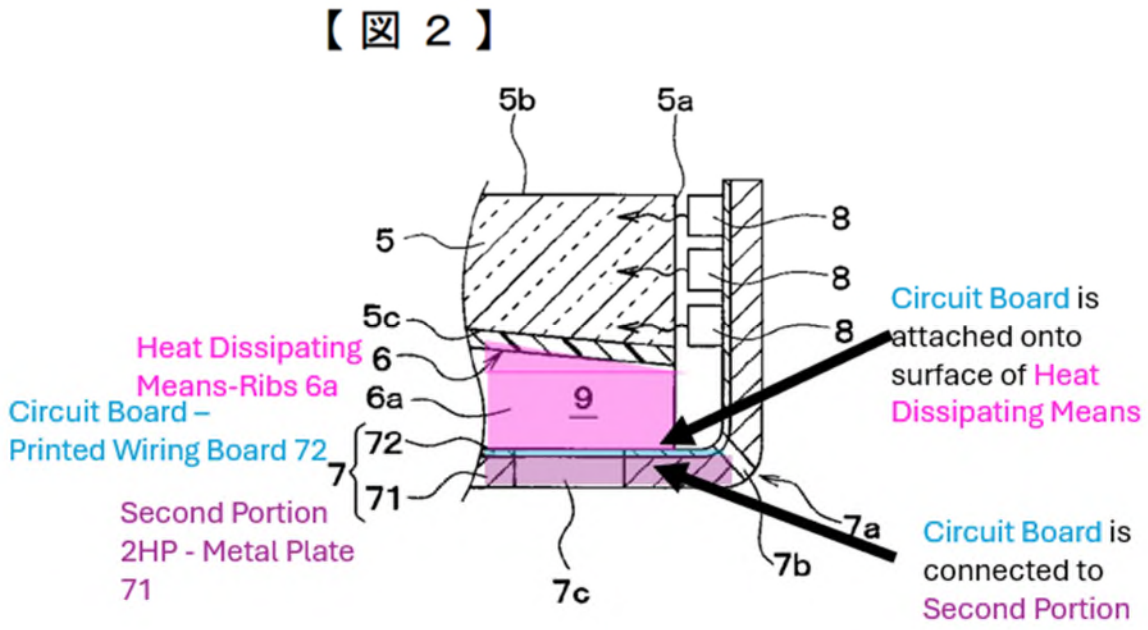

Alternatively, under a narrow construction and as shown in annotated Figure 2 above, Kurokawa discloses multiple ribs 6a which are attached to the surface of printed wiring board 7 and provide structural support to the reflector 6 and printed wiring board 7, but also may act as heat dissipating means. EX1004, [0041]-[0042]; EX1002, ¶192.

Kurokawa discloses the ribs 6a extend inside the heat dissipation space 9 and contact with printed wiring board 7 which prevents the printed wiring board and reflector 6 from bending and becoming deformed. EX1004, [0041]-[0042]. A POSITA would have understood that although Kurokawa does not disclose what material is used for reflector 6 (and consequently ribs 6a), they would be motivated to use metals with good heat conducting properties for reflector 6 and ribs 6a because many metals are reflective and the extra metal surface area provided by

the ribs would improve heat dissipation in the heat dissipation space 9. A POSITA would have understood that by contacting printed wiring board, the ribs 6a would conduct heat away from the printed wiring board and dissipate that heat in heat dissipation space 9. *Id.* Therefore, under an alternative construction, Kurokawa satisfies the limitation of claim 6. Placing such metal ribs on a circuit board would be well within the skill of one in the art. A POSITA would have understood that any exposed electronic components on the circuit board could be routed around or insulated from the metal ribs to avoid a short using techniques known in the art. Alternatively, a "common ground connection may be connected with a heat sink to transfer heat" as taught by Weindorf. EX1007, [0039]-[0040], [0044]; EX1002, ¶193.

E. Claim 7

1. [7pre]

See [3pre]; EX1002, ¶194.

2. [7a]

See [3a]; EX1002, ¶195.

3. [7b]

See [3b], [4]; EX1002, ¶196.

4. [7c]

See [3c]; EX1002, ¶197.

5. [7d]

See Claim 5; EX1002, ¶198.

6. [7e]

See Claim 5; EX1002, ¶199.

F. Claim 8

See [3b], [7b]; EX1002, ¶200.

G. Claim 9

See Claims 6, 7; EX1002, ¶201.

IX. GROUND 5: KUROKAWA OBVIOUSNESS

A. Claim 4

As explained in Ground 4, Kurokawa anticipates claim 4 under the alternative construction of "above" (primary, first and second alternative) and under the ordinary meaning of "above" (second alternative). *See* Ground 4, claim 4; EX1002, ¶202.

Under the ordinary meaning of "above," Kurokawa's primary and first alternatives render obvious "The backlight package as described in claim 3 (*see* Ground 4, Claim 3), wherein the second portion (2HP) extends above the light guiding plate (light guiding plate 5)." *See* Ground 4, claim 3; EX1002, ¶203.

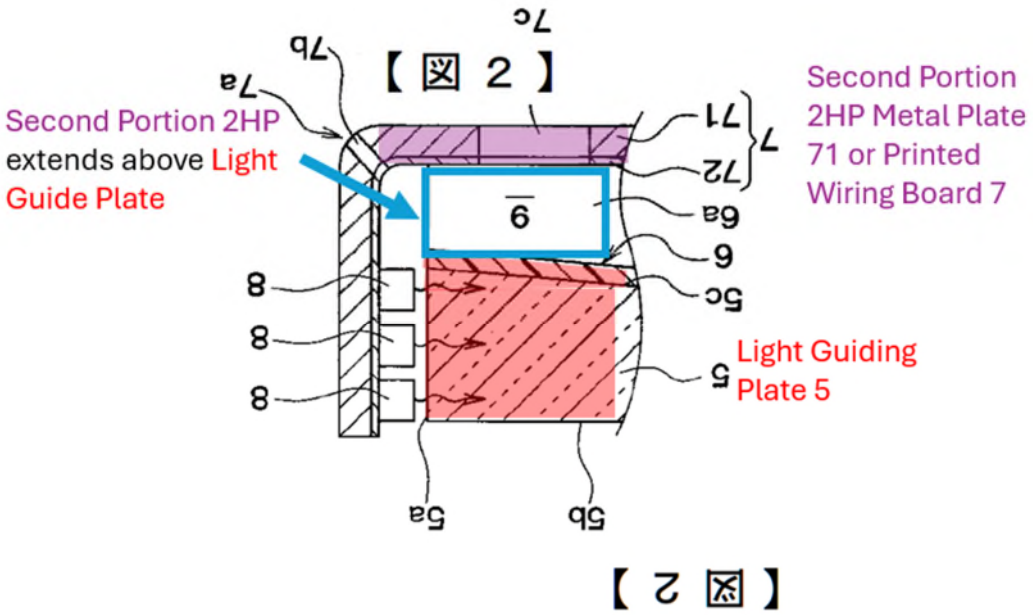

Kurokawa teaches its LED backlight system could be implemented in LCD screens in vehicle display units including speedometers, tachometers, and other gauges, as well as display units for navigation devices. EX1003, [0001], [0009], [0030]. A POSITA would have understood that such vehicle display units could be oriented in any direction relative to a viewer prior to installation, including the orientation opposite that of Figure 2 (as shown in annotated Figure 2 above). A POSITA would also have understood that the vehicle display unit (and specifically tachometers other gauges, or display units) could be installed and operated in any orientation relative to a viewer, including the orientation opposite that of Figure 2, for example, in an LCD display or other gauge mounted above a viewer in a cockpit. Thus, Kurokawa renders obvious all possible orientations of Kurokawa's device in three dimensions, including where it is upside down from the orientation

illustrated in Figure 2. If Figure 2 were illustrated upside down, the second horizontal portion of metal frame 71 would extend "above" a portion of light guiding plate 5 under the ordinary meaning of "above." EX1002, ¶204.

B. Claim 7

1. [7pre]

See Ground 4, [3pre]; EX1002, ¶205.

2. [7a]

See Ground 4, [3a]; EX1002, ¶206.

3. [7b]

See [4]; Ground 4, [3b]; EX1002, ¶207.

4. [7c]

See [4]; Ground 4, [3c]; EX1002, ¶208.

5. [7d]

See Ground 4, Claim 5; EX1002, ¶209.

6. [7e]

See Ground 4, Claim 5; EX1002, ¶210.

C. Claim 8

See [7b]; EX1002, ¶211.

D. Claim 9

See Claim 7; Ground 4, Claim 6; EX1002, ¶212.

X. GROUND 6: KUROKAWA, ISODA

A. Combination Rationale

It would have been obvious to a POSITA to modify Kurokawa in view of Isoda's teachings, a) to connect Kurokawa's LEDs 8 to Kurokawa's circuit board 72 using a conducting wire, and b) to add a plurality of heat dissipating plates as taught by Isoda to further increase the heat-dissipation of Kurokawa's electronic components, including LEDs 8. EX1002, ¶213.

Kurokawa teaches extending the service life of LEDs in a backlight for LCDs through improving the heat dissipation. EX1004, Figs. 1-7, [Abstract], [0008]-[0009], [0030]. Kurokawa recognized the problems that are associated with high package temperatures including the degradation of LEDs. *Id.*, [0005], [0041], [0045]. Kurokawa pointed to multiple methods for heat dissipation, including both a heat dissipation space and use of a metal frame. *Id.*, [Abstract], [0005], [0017]-[0018], [0020], [0021], [0037]-[0041], [0045], [0046], [0047], [0051]-[0052]. Kurokawa teaches that its physical arrangement allows for enhanced heat dissipation, but recognizes that additional heat dissipation might be required, for example, by adding a fan for active cooling. *Id.*, [0052]; EX1002, ¶214.

Isoda discloses an invention relating to providing effective means for heat dissipation for LED devices, *supra* Section VI.A (combination). EX1002, ¶¶120, 215.

Conducting Wire Limitation

It would have been obvious for a POSITA to combine Kurokawa's teachings that the LEDs 8 are driven by circuitry on board 72, with Isoda's teachings of the internal wiring structure to connect the LED 8 to the board 72. Kurokawa discloses LEDs which are mounted on a printed wiring board 7 which consists of a flexible printed wiring board 72 and metal plate 71, the LEDs are driven by a circuitry, including an LED drive circuit on the horizontal portion of board 72. EX1004, Figs. 1, 2, 4(8a), [0037]-[0038], [0044]. Kurokawa teaches LED 8 is mounted on board 72 with solder (*see* [0049]) but does not disclose the precise details of how the anode and cathode of LED 8 are electrically connected to the solder and wires printed on board 72. EX1002, ¶216.

To the extent the Board finds additional implementation details are required to disclose the "conductive wire" limitation (i.e., to the extent the Board finds the showing in Ground 4 insufficient), a POSITA would have been motivated to look for such implementation details in the art and been led to Isoda, which explicitly teaches how to surface mount an LED to a circuit board by using conducting wires. EX1002, ¶217.

A POSITA would have had a reasonable expectation of success in implementing LED connecting configuration in Isoda because connecting an LED to printed wiring boards is a well-known technique that is required to illuminate

the LED. This would only involve routine skill and lead to predictable results. EX1002, ¶218.

<u>Heat Dissipating Means</u>

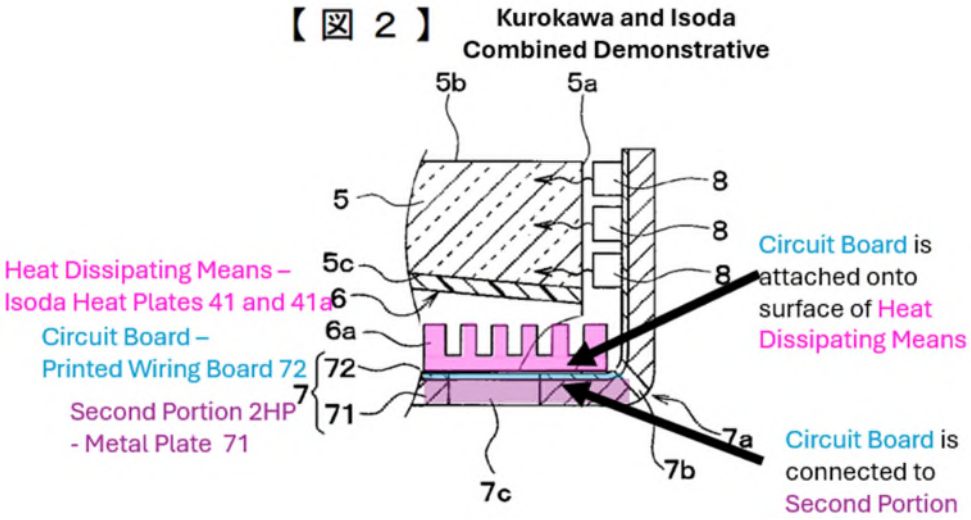

It would have been obvious for a POSITA to combine Kurokawa's teachings related to LCD backlight devices utilizing LEDs with Isoda's teachings of enhanced heat dissipation methods by placing heat dissipating fins as disclosed in Isoda on the Kurokawa's board 72 to enhance heat dissipation into Kurokawa's air space 9. An exemplary, obvious implementation is shown above in Kurokawa and Isoda Combined Demonstrative. EX1002, ¶219.

A POSITA would have been motivated to enhance the heat dissipation provided by Kurokawa based on Kurokawa's express teaching that active cooling, such as a fan, might be required. Thus, a POSITA would have known from Kurokawa's teachings that the passive cooling of Kurokawa's arrangement may not have been sufficient and would have looked for ways to enhance passive heat

cooling to avoid the use of a fan, which can be noisy, expensive, and take up additional room. And even if active cooling were still used, a POSITA would have been motivated to explore ways to enhance heat dissipation to reduce the requirements for a fan resulting in a smaller, less expensive, fan that could run less often or at lower speeds to reduce noise and power consumption. EX1002, ¶220.

A POSITA would have been motivated to use the enhanced cooling means of Isoda, based on the express teachings of Isoda that a plurality of heat fins should be used to enhance heat dissipation in similar LED backlights. A POSITA would have understood that the rate at which heat can be dissipated by a metallic heat sink like those in Kurokawa and Isoda (and in this art in general) is a function of (among other things) the surface area of the contact between the heat sink and the air into which the heat sink is dissipating heat. As discussed further by Dr. Baker, heat fins were well known in the art as a means to improve heat dissipation over a single plate. A POSITA would have understood that Isoda's plurality of heat fins will increase that surface area and contact surface with the air around the heat fins, therefore, the heat dissipating capabilities of the heat sink, relative to a single plate. Further, a POSITA would have understood that a predictable result from adding heat fins to the printed wiring board 72 of Kurokawa would be greater heat dissipation because of the air flow in the heat dissipation space 9. EX1002, ¶221.

Heat dissipation was a known problem in the art as discussed *supra* Section VII.A (Combination Rationale). EX1002, ¶¶ 126, 222.

A POSITA would have had a reasonable expectation of success in making the combination. Kurokawa teaches there is space 9 sufficient to add a plurality of heat sinking fins parallel to the ribs 6a. Adding the fins there would have been obvious because Kurokawa teaches that the air in space 9 is used for heat dissipation, because Kurokawa teaches the overall form factor is important, and because adding the fins would allow them to be placed on top of the additional electronic circuits disposed on board 72 and take advantage of any forced convection. A POSITA would have known that circuits like LED driver circuitry can produce substantial heat, particularly if they are driving a large number of LEDs, as they are in Kurokawa. A POSITA would have known that such circuitry (like any processor) would often use supplemental heat sinking capabilities like a metallic heat sink. Isoda teaches the relevant implementation details and adding a plurality of heat fins to a circuit board is a well-known way in the art to enhance heat dissipation. EX1002, ¶223.

Using the heat fins taught in Isoda in Kurokawa's air space 9 to enhance heat dissipation were known techniques that would yield predictable results and involve only routine skill. EX1002, ¶224.

B. Claim 3

1. [3pre]

See Ground 4, [3pre]; EX1002, ¶225.

2. [3a]

See Ground 4, [3a]; EX1002, ¶226.

3. [3b]

See Ground 4, [3b]; EX1002, ¶227.

4. [3c]

The combination discloses and renders obvious "a light emitting device (LED 8) disposed on the first portion of the fastener (1VP Metal Plate 71) for emitting a light toward the light guiding plate (5)." EX1004, Figs. 1-7, [0006], [0031], [0037], [0043]-[0047], [0059], [0061]. *See* Ground 4, [3c]; EX1002, ¶228.

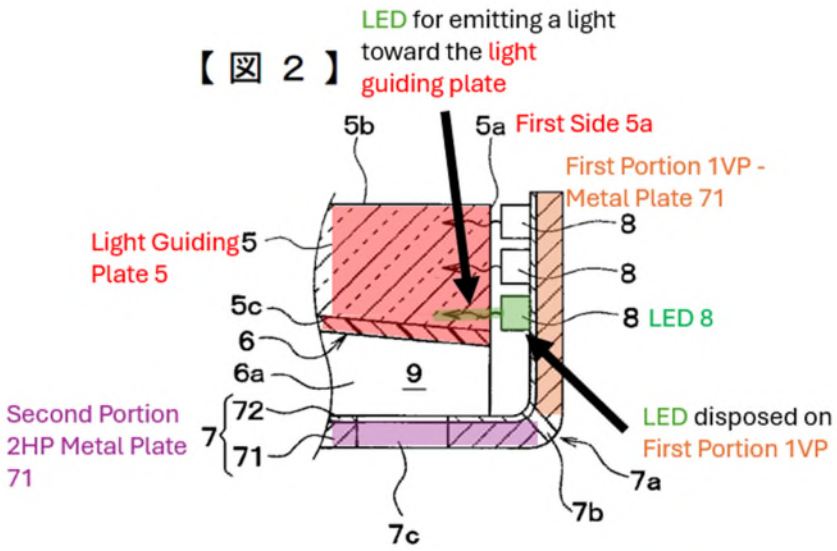

As shown above in annotated Fig. 2, the combination renders obvious that LED 8 could be "directly disposed" on first portion 1VP Metal Plate 71 for

emitting light toward the side of light guiding plate 5. Isoda teaches that it is desirable to directly mount an LED 33 to an exposed portion of heat conductive member (21c and 21e) through a hole in circuit substrate 31 to directly conduct heat to cooling member 41 and heat fins 41a, while connecting the LED to circuit substrate via conducting wires 34a and b. EX1005 Figs, 7, 8, 4:7-30, 4:47-60, 4:61-5:02, 5:34-54. Under a narrow interpretation of disposed on, a POSITA would have known Kurokawa LED 8 could be mounted directly on metal plate 71, through a hole in printed wiring board 72, and that LED 8 could be electrically coupled to printed wiring board 72 via Isoda conducting wires 34a and 34. A POSITA would have understood that this would cause more efficient heat conduction and would be desirable to improve heat dissipation. It would have been obvious to a POSITA to apply the teachings from Isoda to Kurokawa to mount LED 8 directly to 1VP metal plate 71 under a narrow construction of "directly disposed." EX1002, ¶229.

C. Claim 4

See claim 3; Ground 4, claim 4 ("above" anticipation); Ground 5 claim 4 ("above" obviousness). EX1002, ¶230.

D. Claim 5

The combination discloses and renders obvious "The backlight package as claimed in claim 3 (see claim 3), further comprising a circuit board (printed wiring

board 72) and a conducting wire (Isoda's wires 34(a) and 34(b) to circuit patterns 31(a) and 31(b)), the circuit board (72) connecting the second portion (horizontal portion 2HP), and the conducting wire (Isoda's wire 34(a) and 34(b) to circuit patterns 31(a) and 31(b)) electrically coupling the light emitting device (LED 8) to the circuit board ((72) via LED driving patterns 40a and 40b)." *See* Ground 4, claim 5; EX1002, ¶231.

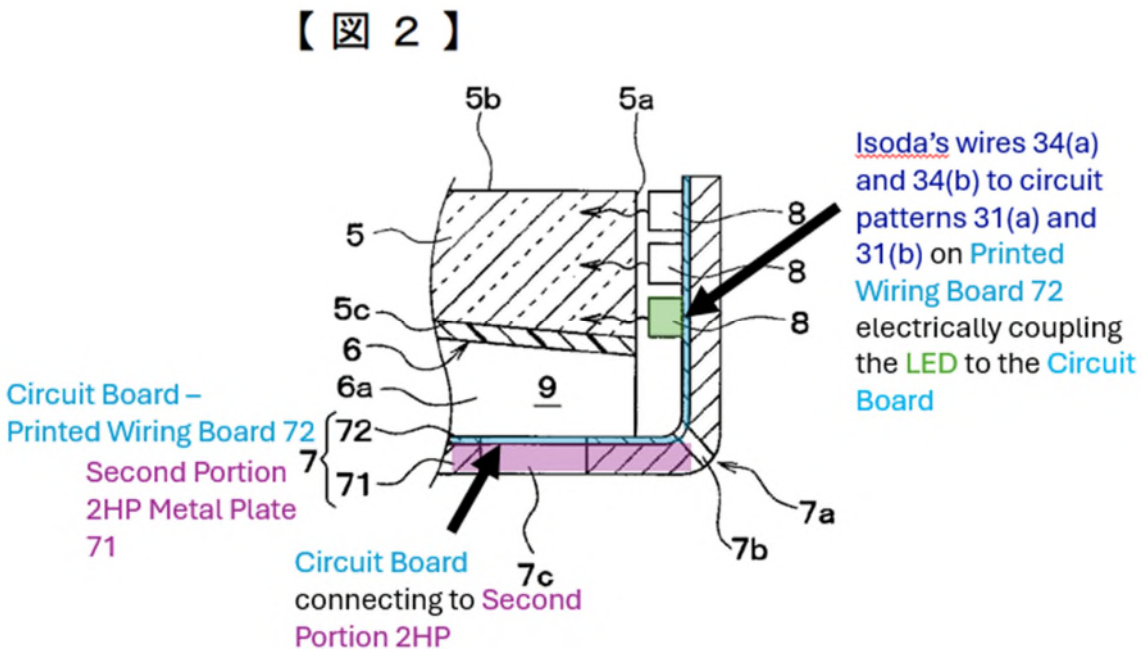

Kurokawa discloses LED 8 is surface mounted and soldered to flexible circuit board 71. *See* Ground 4, claim 5. Isoda discloses that LEDs surface mounted and soldered to PCBs should be electrically connected using a conductive wire. EX1002, ¶232.

FIG. 2

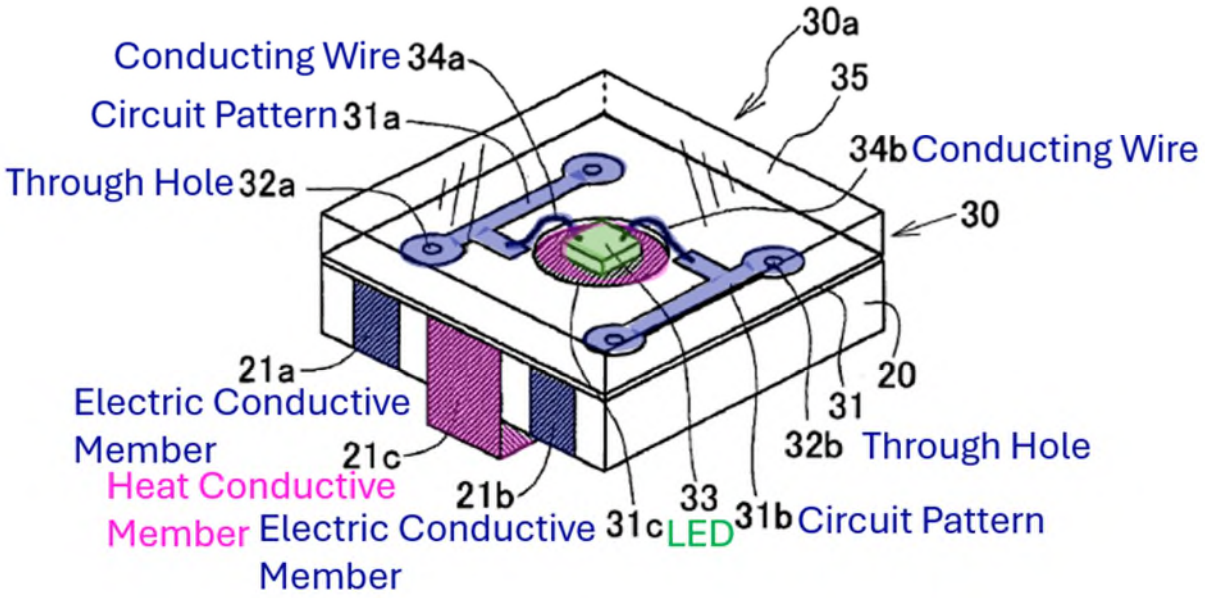

As shown above in the Isoda annotated Figure 2, conducting wires 34(a) and 34(b) connects LED 33 to circuit patterns 31a and 31b which are electrically connected to electric conductive members 21a and 21b which will then connect to circuit board 40 via LED driving patterns 40a and 40b. EX1005, Figs. 2-3, Figs. 7-8, 4:07-25, 4:30-38, 4:61-5:07. Those wires and conductive members connect LED 33 to PCB 40, which provides power. *Id.* As a note, the wiring scheme disclosed in Figures 2, 3, and 4 are applicable to Figures 7 and 8. *Id.*, 5:34-44. EX1002, ¶233.

It would have been obvious for a POSITA to implement Kurokawa's surface mounted LEDs 8 to board 72 using conductive wires as taught in Isoda including under the narrow construction of disposed on (*see* Ground 4, claim 3). *See* Section X.A (Combination Rationale); EX1002, ¶234.

E. Claim 6

Under both constructions of "heat dissipating means" the combination discloses or renders obvious "The backlight package as claimed in claim 3 (*see* Ground 4, claim 3; Ground 6 claim 3), further comprising a circuit board (printed wiring board 72) and a heat dissipating means (Isoda heat plates 41 and 41a), the circuit board (72) connecting the second portion (2HP), and the heat dissipating means (Isoda heat plates 41 and 41a), attached onto the surface of the circuit board (72 in space 9) for conducting a heat generated thereon." EX1002, ¶235.

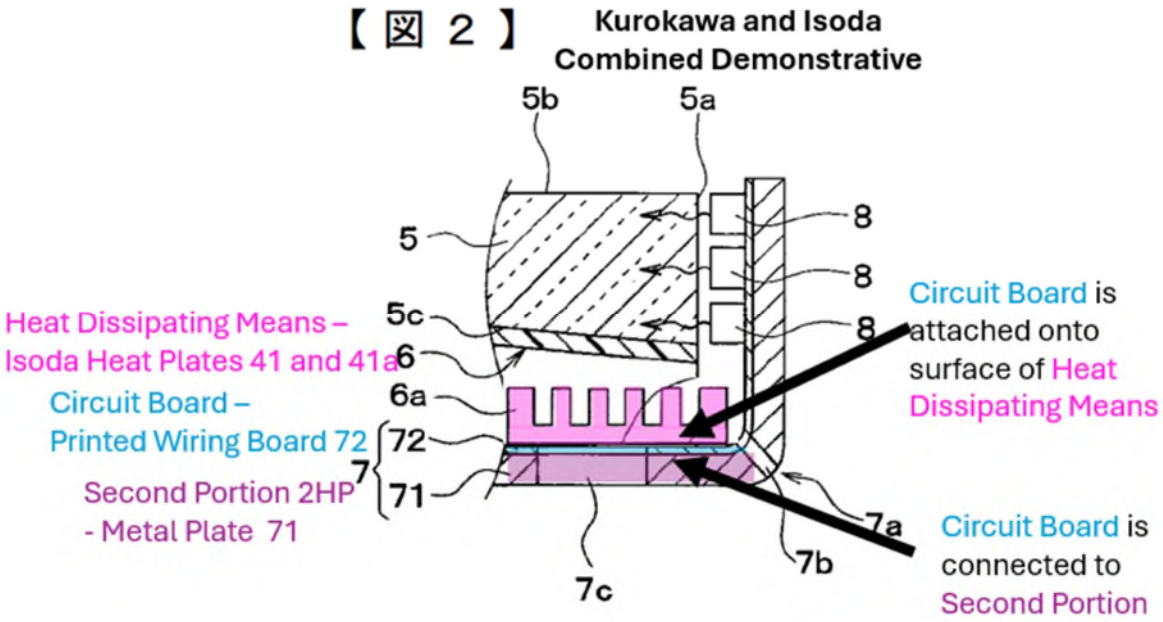

As shown in Kurokawa and Isoda Combined Demonstrative above, Kurokawa discloses printed wiring board 72 connecting the second horizontal portion 2HP of metal plate 71. Kurokawa teaches that when heat generated by LEDs is not dissipated efficiently, thermal degradation occurs, and the service life

of the LEDs will be shortened. *Id.* [Abstract], [0005], [0045]-[0047]. In order to combat this issue, Kurokawa discloses heat dissipation space 9 formed between reflector 6 and printed wiring board 7. *Id.* Figs. 1-7, [0017]-[0018], [0041], [0052]. Air in heat dissipation space 9 can be circulated by forced or natural convection using a fan or other means to further increase the heat dissipation. *Id.* [0017], [0052]; EX1002, ¶236.

It would have been obvious to modify Kurokawa to include Isoda's heat dissipating fins 41 in space 9, and disposed on board 72, to enhance the heat dissipation by board 72 by enhancing the conduction of heat away from LEDs 8 and the other electronic circuits on board 72 into the air in space 9. *See* Section X.A (combination). A POSITA would have understood that it was common to attach heat sinks to the circuit board around active circuits and would have placed a heat sink so that it did not interfere with active circuits and leave space for holes 7c that may be integrated in board 7 of Kurokawa. EX1002, ¶237.

FIG. 2

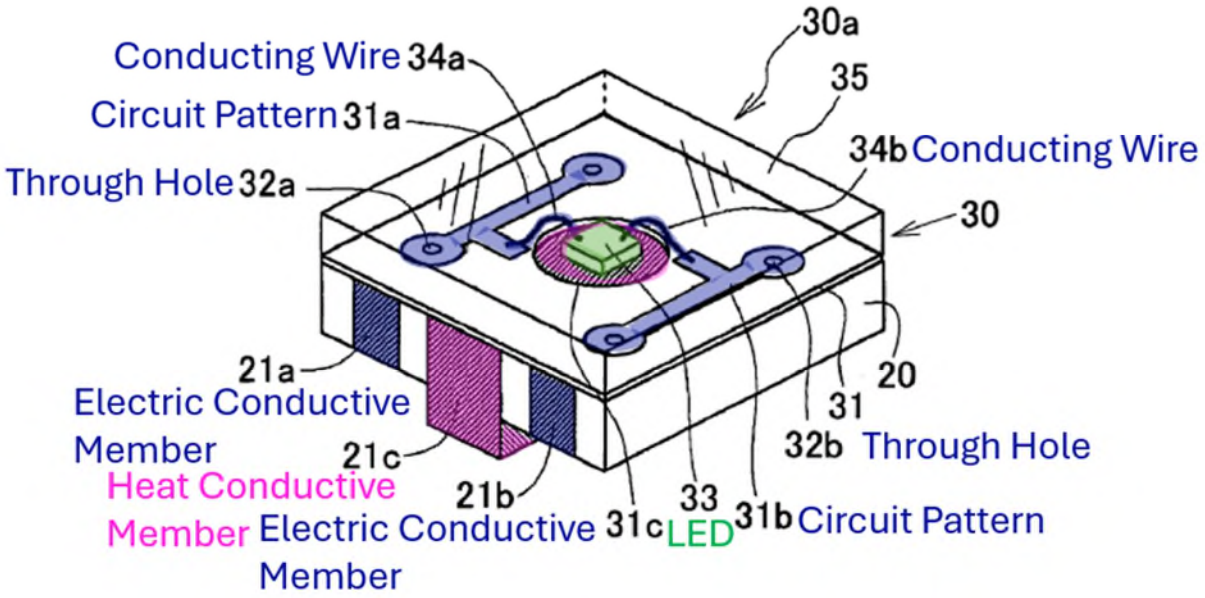

Isoda discloses heat dissipation means. *See* Ground 2, Claim 6. EX1002, ¶¶ 144, 238.

It would have been obvious to use this arrangement to enhance heat transfer from Kurokawa's surface mounted LED 8, via a similar member 21c, through board 72 to the metal plate 71. While Kurokawa notes that board 72 is thin and can conduct heat, a POSITA would have understood that the solid metal conductor 21c would enhance heat transfer, as explicitly taught by Isoda. EX1002, ¶239.

FIG. 7

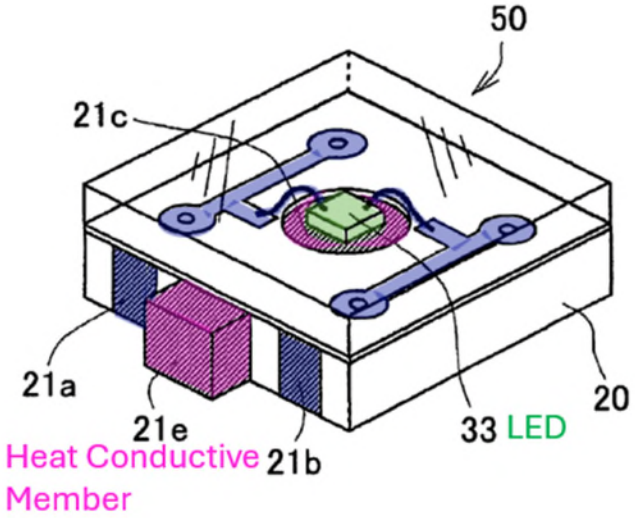

FIG. 8

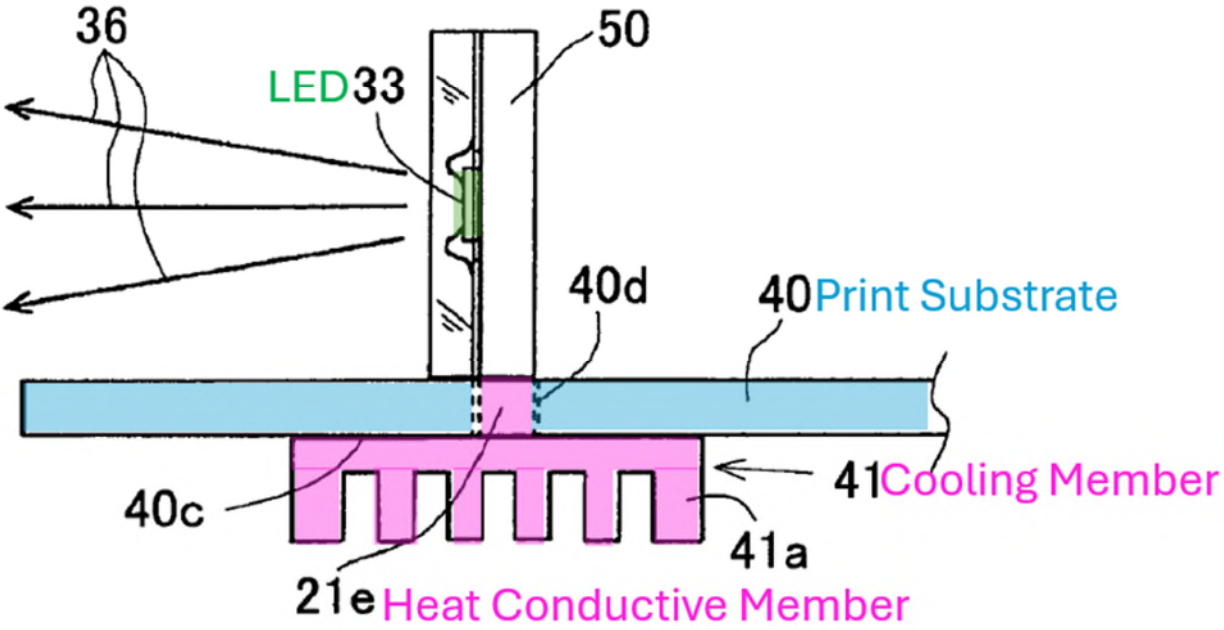

Isoda discloses heat dissipation from an upright LED as discussed in Ground 2, Claim 6. This teaching of Isoda confirms to a POSITA that the enhancement of

heat transfer of Isoda is applicable to configurations where the heat transfer flows from an LED through a first vertical portion and into a second horizontal portion, similar to Kurokawa. EX1002, ¶¶146, 240.

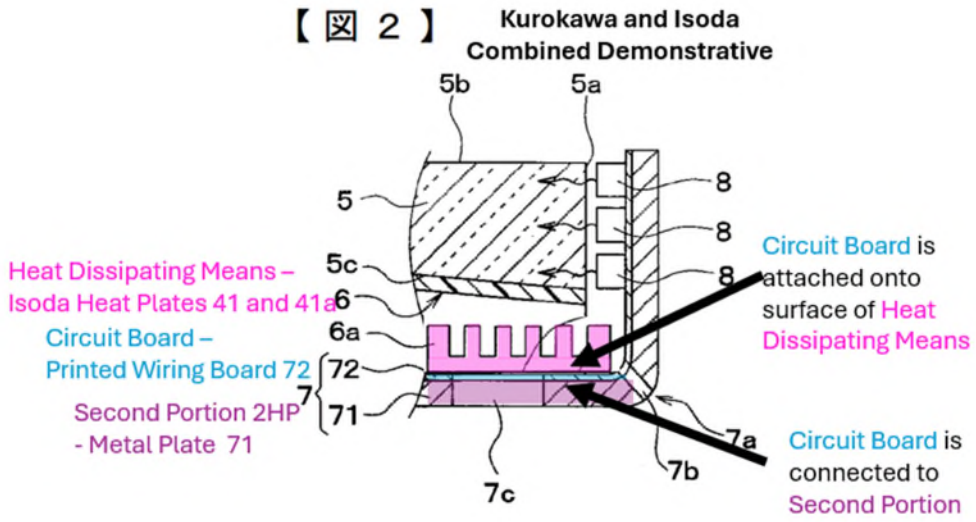

A POSITA would have understood that Isoda teaches an enhanced method for cooling LEDs using heat fins 41a to eventually transfer heat from LEDs to the air. A POSITA would have understood that if ventilation holes 7c were integrated into the combination, the holes would have allowed air to flow past the cooling member, improving heat dissipation. EX1005, [0019], [0042], [0053]. A POSITA would have understood those teachings are directly applicable to improve the similar flow of heat described in Kurokawa from LED 8, through board 72 and metal plate 71 into air space 9. A POSITA would have been motivated to utilize the cooling member described in Isoda with the printed wiring board in Kurokawa's heat dissipation space 9 to improve the heat dissipating capabilities of

Kurokawa as shown above in annotated Figure 2. *See* Section X.A (Combination Rationale); EX1002, ¶241.

F. Claim 7

1. [7pre]

See [3pre]; Ground 4, [3pre]; EX1002, ¶242.

2. [7a]

See [3a]; Ground 4, [3a]; EX1002, ¶243.

3. [7b]

See Claim 4; Ground 4, [3b], [4] ("above" anticipation); *see* Ground 5, [4] ("above" obviousness); EX1002, ¶244.

4. [7c]

See [3c]; Ground 4, [3c]; EX1002, ¶245.

5. [7d]

See Claim 5; EX1002, ¶246.

6. [7e]

See Claim 5; EX1002, ¶247.

G. Claim 8

See Claim 7; *see* Ground 4, [3b] EX1002, ¶248.

H. Claim 9

See Claim 6, 7; EX1002, ¶249.

XI. GROUND 7: FUKUTA ANTICIPATION

A. Claim 3

1. [3pre]

Fukuta discloses "A backlight package comprising." EX1006, Fig. 1, Fig. 11, [0001], [0005]-[0015], [0028], [0041]-[0042]; *see also*, [3a]-[3c]; EX1002, ¶250.

2. [3a]

Fukuta discloses "a light guiding plate (light directing plate 11 and light guiding sheet 11a) having a first side." EX1006, Fig. 1, Fig. 2, Fig. 3, Fig. 7a-7c, Fig. 11, [0006], [0041]-[0042], [0048], [0072]-[0073]; EX1002, ¶251.

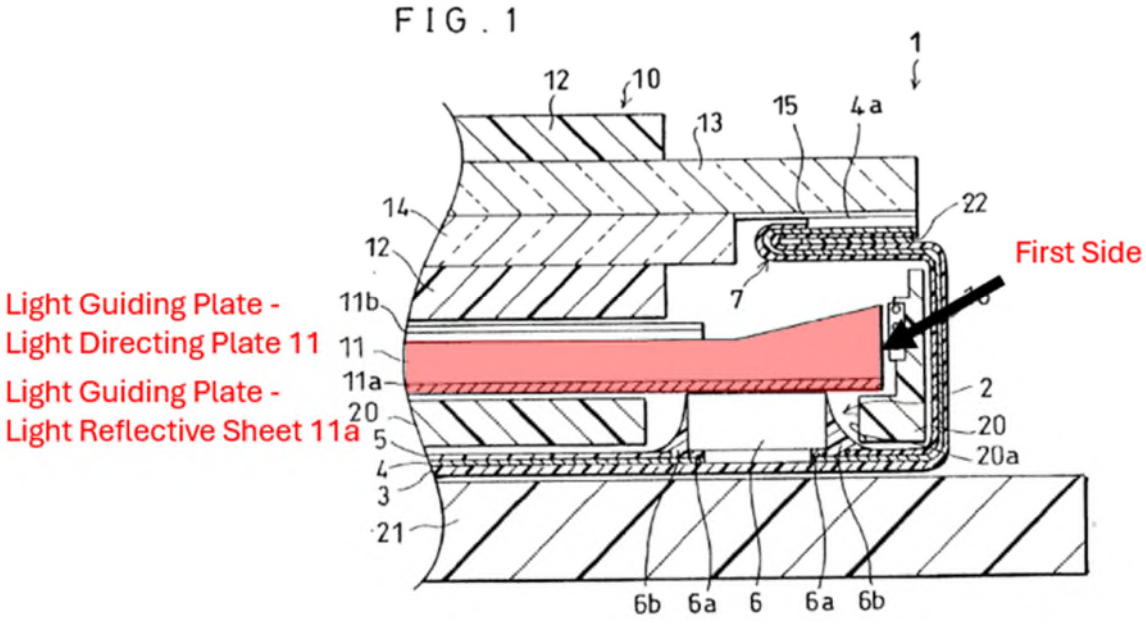

3. [3b]

Fukuta discloses "a first fastener (frame 20) having a first portion (1VP) and a second portion (2HP), the first portion disposed adjacent to the first side of the light guiding plate (11 and 11a), wherein the first portion and the second portion are arranged in a substantially perpendicular relationship to form a substantially L-shaped structure." EX1006, Fig. 1, Fig. 2, Fig. 3, Fig. 7a-7c, Fig. 11, [0006]-[0007], [0042], [0048]-[0050]; EX1002, ¶252.

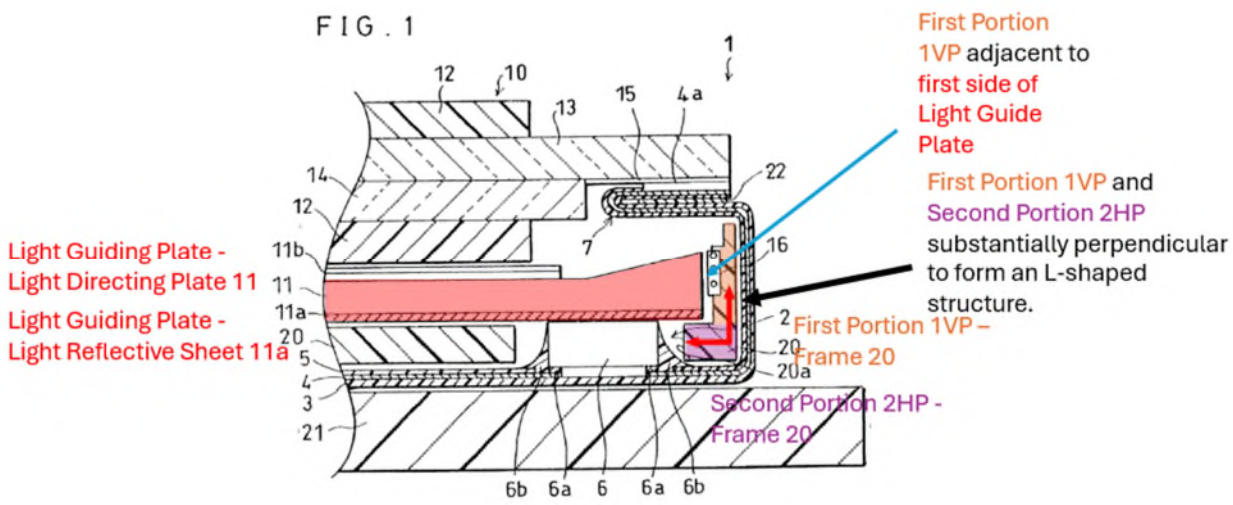

As shown in annotated Fig. 1 above, Frame 20 is comprised of a first portion (1VP) and a second portion (2HP), with the first vertical portion disposed adjacent to the first side of a light guiding plate (11 and 11a), and the first portion and the second portion are arranged in a substantially perpendicular relationship to form a substantially L-shaped structure. EX1002, ¶253.

4. [3c]

Fukuta discloses "a light emitting device (LED 16) disposed on the first portion of the fastener (1VP) for emitting a light toward the light guiding plate (11 and 11a)." EX1006, Fig. 1, Fig. 2, Fig. 3, Fig. 7a-7c, Fig. 11, [0042], [0048], [0072]-[0073]; EX1002, ¶254.

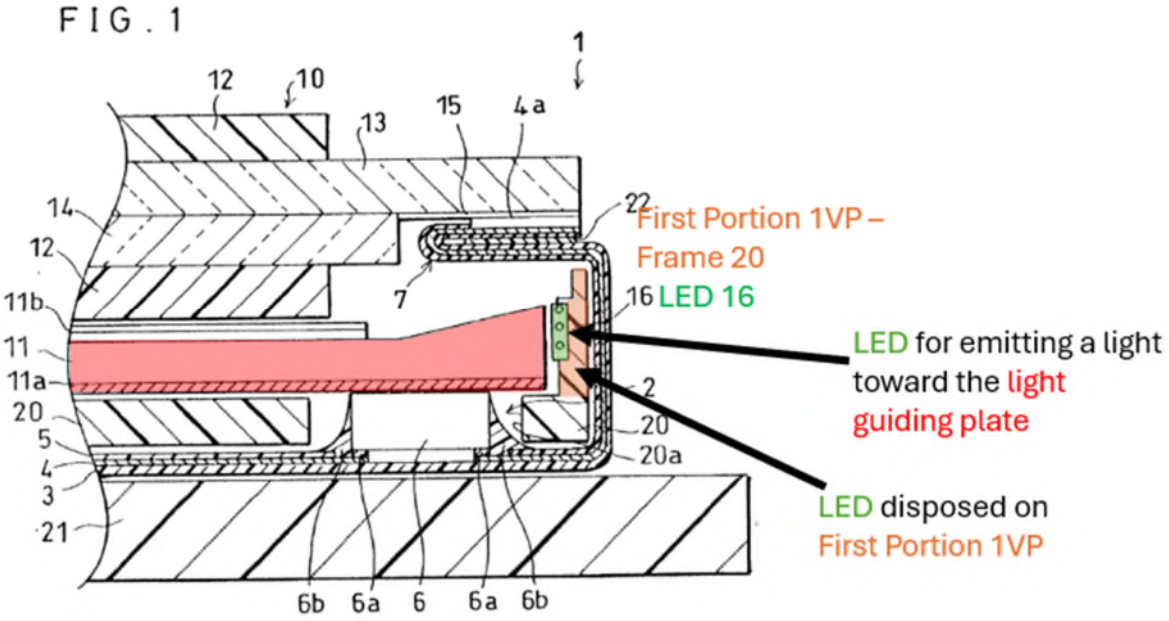

B. Claim 4

Fukuta discloses "The backlight package as described in claim 3, wherein the second portion (2HP) extends above the light guiding plate (11 and 11a)." *See* Claim 3; EX1002, ¶255.

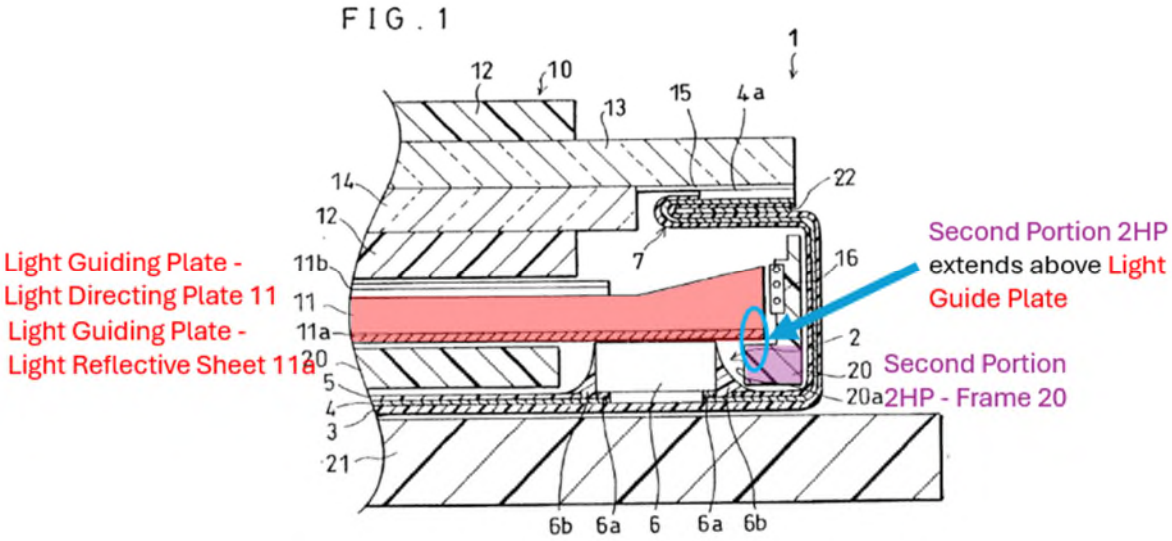

As shown in annotated Figure 1 above, Fukuta discloses the second horizontal portion 2HP of frame 20 is displaced vertically from and overlaps with a portion of plate 11 and sheet 11a. Thus, Fukuta discloses this limitation under the alternative construction in the same manner as the only disclosed embodiment in the 842 patent. EX1002, ¶256.

XII. GROUND 8: FUKUTA OBVIOUSNESS

A. Claim 4

Under the ordinary meaning of "above," Fukuta renders obvious "The backlight package as described in claim 3 (*see* Ground 7, Claim 3), wherein the second portion (2HP) extends above the light guiding plate (light guiding plate 5)." *See* Ground 7, Claim 3; EX1002, ¶257.

Fukuta discloses second horizontal portion 2HP of frame 20 is displaced vertically from and overlaps with a portion of plate 11, 11a. EX1006. Fig. 1, [0041]-[0049]; EX1002, ¶258.

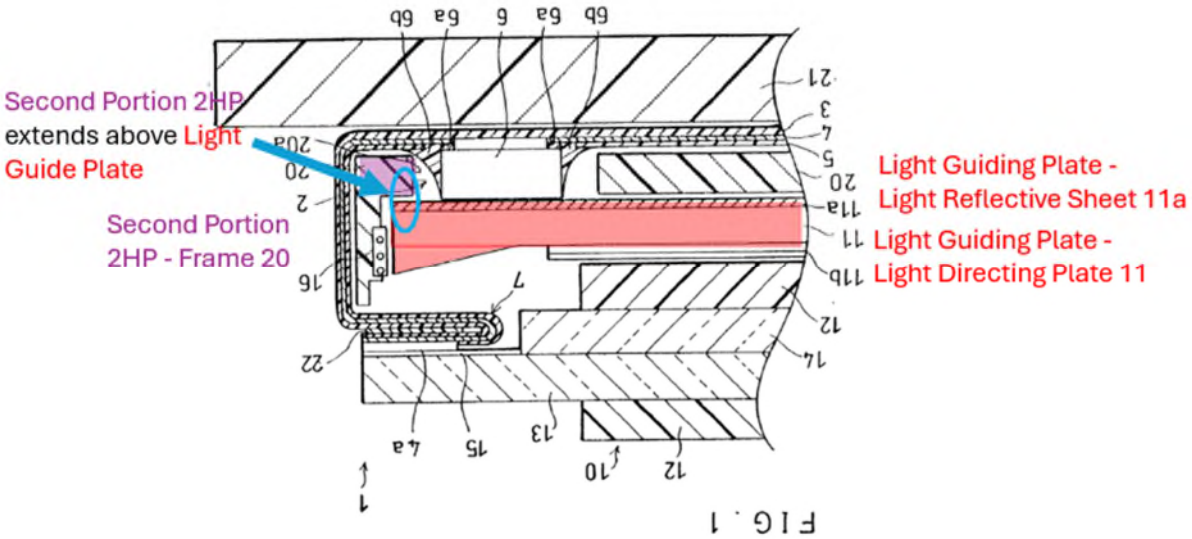

Fukuta (ordinary meaning and alternative construction) teaches its LED backlight system could be implemented in LCD screens in portable phones or PDAs. EX1006, [0001]-[0004], [0042]. A POSITA would have known that such portable devices could be held in any orientation by the user in three dimensions, including the orientation opposite that of Figure 1 (as shown in annotated Figure 1 above). Thus, Fukuta renders obvious all possible orientations of Fukuta's device in three dimensions, including where it is upside down from the orientation illustrated in Figure 1. If Figure 1 were illustrated upside down, the second horizontal portion of frame 20 would extend "above" a portion of light guiding plate 11 and 11a under the ordinary meaning of "above." EX1002, ¶259.

XIII. DISCRETIONARY DENIAL IS NOT WARRANTED

A. 35 U.S.C. § 314(a) Analysis

The *Fintiv* factors (enumerated below) weigh against discretionary denial. IPR2020-00019, Paper 11, 5-6 (PTAB Mar. 20, 2020) (precedential).

1. Stay

This factor is neutral because no party has requested a stay. *Sand Revolution II, LLC. v. Continental Intermodal Group-Trucking LLC*, IPR2019-01393, Paper 24 at 7 (PTAB June 16, 2020).

2. Trial Date

No trial date has been set yet in the Litigation. Thus, this factor weighs against a discretionary denial.

3. Parallel Proceeding

Petitioner has not yet answered the Complaint. Accordingly, this factor weighs against a discretionary denial.

4. Issue Overlap

Petitioner challenges 7 claims. The Complaint in the Litigation explicitly asserts only 1. Accordingly, this IPR addresses significantly more invalidity issues than the Litigation and, therefore, this factor weighs against a discretionary denial.

5. Same Party

Because Petitioner and the PO are the parties in the Litigation, and because this Board is likely to reach the merits around the same time as the district court,

this factor weighs slightly against discretionary denial. *See NVIDIA Corp. v. Invensas Corp.*, IPR2020-00603, Paper 11, at 23.

6. Other Considerations

Other considerations weigh strongly against a discretionary denial. The Challenged Claims are clearly invalid, Petitioners have not previously challenged any related patents based on the references relied upon in this petition, and the patent has never been challenged in a post-issuance proceeding. Thus, this factor weighs against a discretionary denial.

Even if the Board were to determine that *Fintiv* factors on balance weigh in favor of denial, institution should nonetheless be granted because this Petition satisfies the compelling merits standards. Interim Guidance at 4; *Vizio, Inc. v. Maxell, Ltd.*, IPR2022-01458, Paper 8, at 62.

B. 35 U.S.C. § 325(b) Analysis

Applying the two-part framework discussed in *Advanced Bionics, LLC v. Med-El Elektromedizinische Gerate GMBH*, IPR2019-01469, Pap. 6, *8-9, the Board should not exercise its §325(d) discretion to deny institution.

None of the challenges are substantially the same as those considered during prosecution. In the event that the challenges herein are found to be based on prior art that is the same as or cumulative to prior art considered by the examiner during prosecution, the examiner has made a clear error in allowing the claims over such

prior art. This is at least because the challenges in this Petition satisfy the compelling merits standard, and allowing the claims over such prior art is therefore clear error.

XIV. COMPLIANCE WITH FORMAL REQUIREMENTS

A. Mandatory Notices Under 37 C.F.R. §§ 42.8(b)(1)-(4)

1. Real Party-In-Interest

BOE Technology Group Co., Ltd. is the real party-in-interest.

2. Related Matters

The 842 patent is subject to the following actions: *Optronic Sciences LLC v. BOE Technology Group Co., LTD*, 2:23-cv-00549 (EDTX).

3. Lead and Backup Counsel

Lead Counsel	Backup Counsel
Brian Erickson Reg. No. 48895 DLA Piper LLP (US) 303 Colorado Street, Suite 3000 Austin, Texas 78701-4653 Phone: + 1 512 457 7000 Fax: + 1 512 721 2263 Brian.erickson@us.dlapiper.com	Michael Saulnier Reg. No. 78432 DLA Piper LLP (US) 303 Colorado Street, Suite 3000 Austin, Texas 78701-4653 Phone: + 1 512 457 7065 Fax: + 1 512 721 2234 Michael.saulnier@us.dlapiper.com

4. Service Information

Please address correspondence to counsel at the addresses above. Petitioner consents to electronic service to: dla-boe-optronicsciences-IPR@us.dlapiper.com and the email addresses listed above.

B. Proof of Service on the Patent Owner

In accordance with 37 C.F.R. §§42.6(e) and 42.105, as identified in the attached Certificate of Service, a copy of this Petition in its entirety is being served electronically to the Patent Owner's attorney of record, as well as on counsel for Patent Owner in the District Court Litigation.

C. Power of Attorney

Powers of attorney are being filed with designation of counsel in accordance with 37 C.F.R. § 41.10(b).

D. Standing

In accordance with 37 C.F.R. §42.104(a), Petitioner certifies that the 842 patent is available for *inter partes* review and that Petitioner is not barred or estopped from requesting an *inter partes* review challenging the patent claims on the grounds identified in this Petition.

E. Fees

The undersigned authorizes the Director to charge the fee specified by 37 C.F.R. § 42.15(a) and any additional fees that might be due in connection with this Petition to Deposit Account No. 503266.

XV. CONCLUSION

All Challenged Claims of the 842 patent should be found unpatentable for the reasons discussed in this Petition.

Respectfully submitted,

/s/ Brian Erickson
Reg. No. 48,895
DLA Piper LLP (US)
303 Colorado Street, Suite 3000
Austin, Texas 78701-4653
Phone: + 1 512 457 7000
Fax: + 1 512 721 2263
Brian.erickson@us.dlapiper.com

Attorney for Petitioner, BOE Technology Group Co., Ltd.

CERTIFICATE OF WORD COUNT

Pursuant to 37 C.F.R. § 42.24(d), Petitioner certifies that this petition includes 13,989 words, as measured by Microsoft Word, exclusive of the table of contents, mandatory notices under § 42.8, certificates of service, word count, claim listing, and exhibits.

Date: July 5, 2024

/s/ Brian Erickson
Brian Erickson
Reg. No. 48,895
DLA Piper LLP (US)
303 Colorado Street, Suite 3000
Austin, Texas 78701-4653
Phone: + 1 512 457 7000
Fax: + 1 512 721 2263
Brian.erickson@us.dlapiper.com

Attorney for Petitioner, BOE Technology Group Co., Ltd.

CERTIFICATE OF SERVICE

The undersigned certifies pursuant to 37 C.F.R. §§ 42.6(e) and 42.105 that on July 5, 2024, a true and correct copy of the Petition for *Inter Partes* Review of U.S. Patent No. 7,168,842 was served by emailing a copy of same (by agreement) to the following attorneys for the Patent Owner:

Benjamin T. Wang (bwang@raklaw.com)

Christian Conkle (cconkle@raklaw.com)

Alexandra Loew (aloew@raklaw.com)

Qi Peter Tong (ptong@raklaw.com)

Respectfully submitted,

/s/ Brian Erickson