US006992332B2

(12) **United States Patent**
Yamazaki et al.

(10) **Patent No.: US 6,992,332 B2**
(45) **Date of Patent: Jan. 31, 2006**

(54) **LIGHT EMITTING DEVICE AND METHOD FOR MANUFACTURING THE SAME**

(75) Inventors: **Shunpei Yamazaki**, Tokyo (JP); **Satoshi Murakami**, Tochigi (JP); **Mitsuaki Osame**, Kanagawa (JP)

(73) Assignee: **Semiconductor Energy Laboratory Co., Ltd.**, Kanagawa-ken (JP)

(*) Notice: Subject to any disclaimer, the term of this patent is extended or adjusted under 35 U.S.C. 154(b) by 127 days.

(21) Appl. No.: **10/428,952**

(22) Filed: **May 5, 2003**

(65) **Prior Publication Data**

US 2004/0072380 A1 Apr. 15, 2004

(30) **Foreign Application Priority Data**

May 15, 2002 (JP) 2002-139934

(51) **Int. Cl.**
H01L 27/15 (2006.01)

(52) **U.S. Cl.** **257/83**; 257/59; 257/84; 257/89; 438/22

(58) **Field of Classification Search** 257/59, 257/83, 84, 89; 438/22, 24
See application file for complete search history.

(56) **References Cited**

U.S. PATENT DOCUMENTS

5,313,076 A 5/1994 Yamazaki et al.
5,459,596 A 10/1995 Ueda et al.
5,583,369 A 12/1996 Yamazaki et al.
5,585,949 A 12/1996 Yamazaki et al.
5,696,386 A 12/1997 Yamazaki
5,706,064 A 1/1998 Fukunaga et al.
5,733,797 A 3/1998 Yamaha
5,781,254 A 7/1998 Kim et al.
5,818,550 A 10/1998 Kadota et al.
5,946,561 A 8/1999 Yamazaki et al.
5,956,105 A 9/1999 Yamazaki et al.
5,982,460 A 11/1999 Zhang et al.
5,990,542 A 11/1999 Yamazaki
6,037,712 A 3/2000 Codama et al.
6,057,904 A 5/2000 Kim et al.

(Continued)

FOREIGN PATENT DOCUMENTS

EP 1 128 430 A2 2/2001

(Continued)

OTHER PUBLICATIONS

U.S. Appl. No. 10/412,234, filed Apr. 14, 2003, Masahiko Hayakawa et al. "Display Device and Method of Fabricating the Same".

(Continued)

Primary Examiner—George Eckert
Assistant Examiner—Edgardo Ortiz
(74) *Attorney, Agent, or Firm*—Nixon Peabody LLP; Jeffrey L. Costellia

(57) **ABSTRACT**

A light emitting element containing an organic compound has a disadvantage in that it tends to be deteriorated by various factors, so that the greatest problem thereof is to increase its reliability (make longer its life span). The present invention provides a method for manufacturing an active matrix type light emitting device and the configuration of such an active matrix type light emitting device having high reliability. In the method, a contact hole extending to a source region or a drain region is formed, and then an interlayer insulation film made of a photosensitive organic insulating material is formed on an interlayer insulation film. The interlayer insulation film has a curved surface on its upper end portion. Subsequently, an interlayer insulation film provided as a silicon nitride film having a film thickness of 20 to 50 nm is formed by a sputtering method using RF power supply.

36 Claims, 22 Drawing Sheets

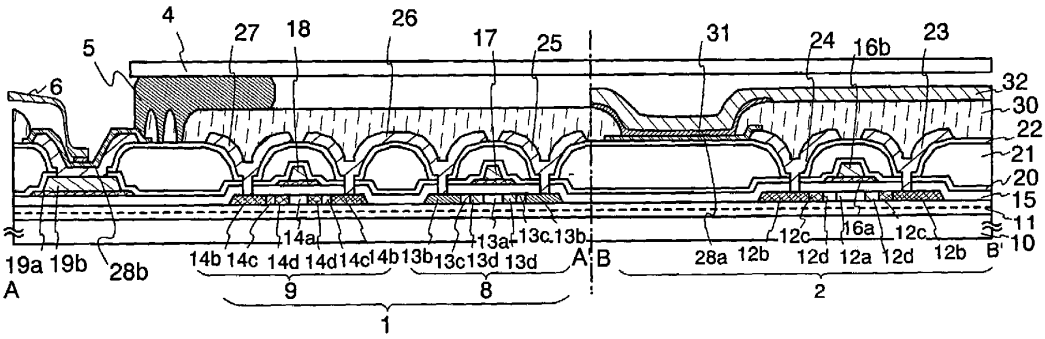

U.S. PATENT DOCUMENTS

6,069,443	A	5/2000	Jones et al.	
6,115,090	A	9/2000	Yamazaki	
6,136,624	A	10/2000	Kemmochi et al.	
6,150,692	A	11/2000	Iwanaga et al.	
6,215,154	B1	4/2001	Ishida et al.	
6,236,106	B1	5/2001	Sato	
6,252,297	B1	6/2001	Kemmochi et al.	
6,271,066	B1	8/2001	Yamazaki et al.	
6,271,543	B1	8/2001	Ohtani et al.	
6,274,516	B1	8/2001	Kamei et al.	
6,294,799	B1	9/2001	Yamazaki et al.	
6,306,694	B1	10/2001	Yamazaki et al.	
6,346,718	B1	2/2002	Yamanaka et al.	
6,372,558	B1	4/2002	Yamanaka et al.	
6,429,053	B1	8/2002	Yamazaki et al.	
6,492,659	B1	12/2002	Yamazaki et al.	
6,515,300	B2	2/2003	den Boer et al.	
6,538,301	B1	3/2003	Yamada et al.	
6,562,672	B2	5/2003	Yamazaki et al.	
6,593,990	B1	7/2003	Yamazaki	
6,599,818	B2	7/2003	Dairiki	
6,605,826	B2 *	8/2003	Yamazaki et al.	257/72
6,608,353	B2	8/2003	Miyazaki et al.	
6,614,076	B2 *	9/2003	Kawasaki et al.	257/350
6,657,230	B1	12/2003	Murade	
6,664,145	B1	12/2003	Yamazaki et al.	
6,664,732	B2	12/2003	Yamazaki et al.	
6,689,492	B1	2/2004	Yamazaki et al.	
6,774,578	B2	8/2004	Tanada	
6,777,710	B1 *	8/2004	Koyama	257/59
6,778,232	B2	8/2004	Nakata et al.	
6,791,129	B2	9/2004	Inukai	
6,822,629	B2	11/2004	Yamazaki et al.	
6,828,950	B2	12/2004	Koyama	
2001/0005606	A1	6/2001	Tanaka et al.	
2001/0009283	A1	7/2001	Arao et al.	
2001/0030322	A1	10/2001	Yamazaki et al.	
2001/0051416	A1	12/2001	Yamazaki et al.	
2001/0053559	A1	12/2001	Nagao et al.	
2001/0055841	A1	12/2001	Yamazaki et al.	
2002/0036462	A1	3/2002	Hirano	
2002/0145116	A1	10/2002	Choo	
2002/0155706	A1	10/2002	Mitsuki et al.	
2003/0057419	A1	3/2003	Murakami et al.	
2003/0090447	A1	5/2003	Kimura	
2003/0129790	A1	7/2003	Yamazaki et al.	
2003/0189207	A1	10/2003	Murakami et al.	
2003/0189210	A1	10/2003	Yamazaki et al.	
2003/0193054	A1	10/2003	Hayakawa et al.	
2003/0197178	A1	10/2003	Yamazaki et al.	
2003/0206332	A1	11/2003	Yamazaki et al.	
2003/0210358	A1	11/2003	Zhang et al.	
2003/0230764	A1	12/2003	Yamazaki et al.	
2004/0075094	A1	4/2004	Yamazaki et al.	

FOREIGN PATENT DOCUMENTS

EP	1 128 430 A2	8/2001
JP	01-156725	6/1989
JP	02-039541	2/1990
JP	02-234134	9/1990
JP	07-273191	10/1995
JP	08-203876	8/1996
JP	10-039334	2/1998
JP	10-056182	2/1998
JP	10-068972	3/1998
JP	10-307305	11/1998
JP	2001-189462	7/2001
JP	2001-313397	11/2001
JP	2001-356711	12/2001
JP	2003-17273	1/2003

OTHER PUBLICATIONS

U.S. Appl. No. 10/426,950, filed May 1, 2003, Shunpei Yamazaki et al., "Display Device".

U.S. Appl. No. 10/419,764, filed Apr. 22, 2003, Shunpei Yamazaki et al., "Semiconductor Device and Display Element Using Semiconductor Device".

U.S. Appl. No. 10/412,234, filed Apr. 8, 2003, Masahiko Hayakawa et al. "Display Device and Method of Fabricating the Same".

* cited by examiner

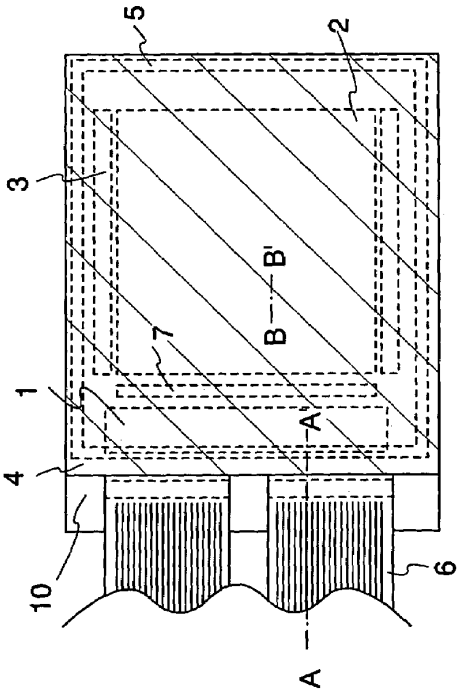
1
2
3
4
5
6
7
10
A
A'
B
B'

Fig. 1A

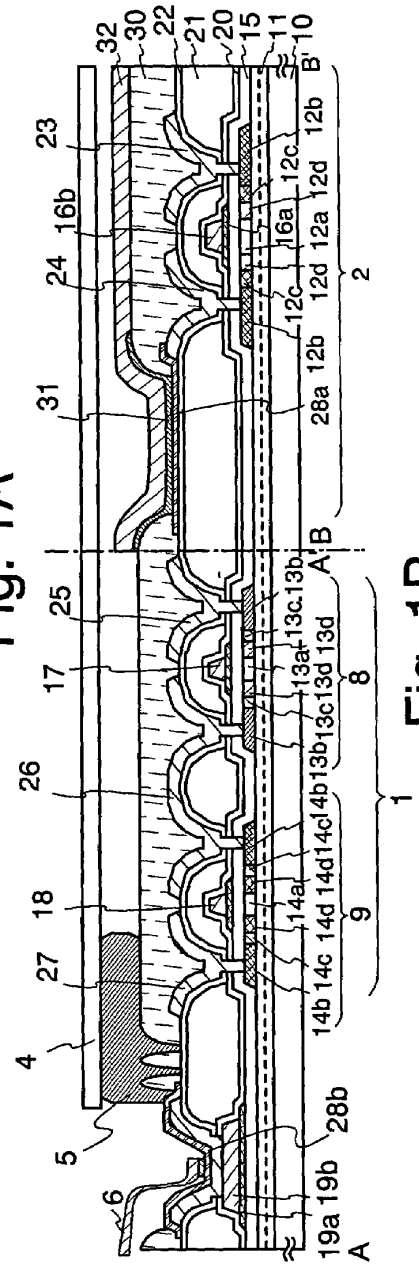
1
2
4
5
6
8
9
10
11
15
16a
16b
17
18
19a
19b
20
21
22
23
24
25
26
27
28a
28b
30
31
32
A
A'
B
B'
12a
12b
12c
12d
13a
13b
13c
13d
14a
14b
14c
14d

Fig. 1B

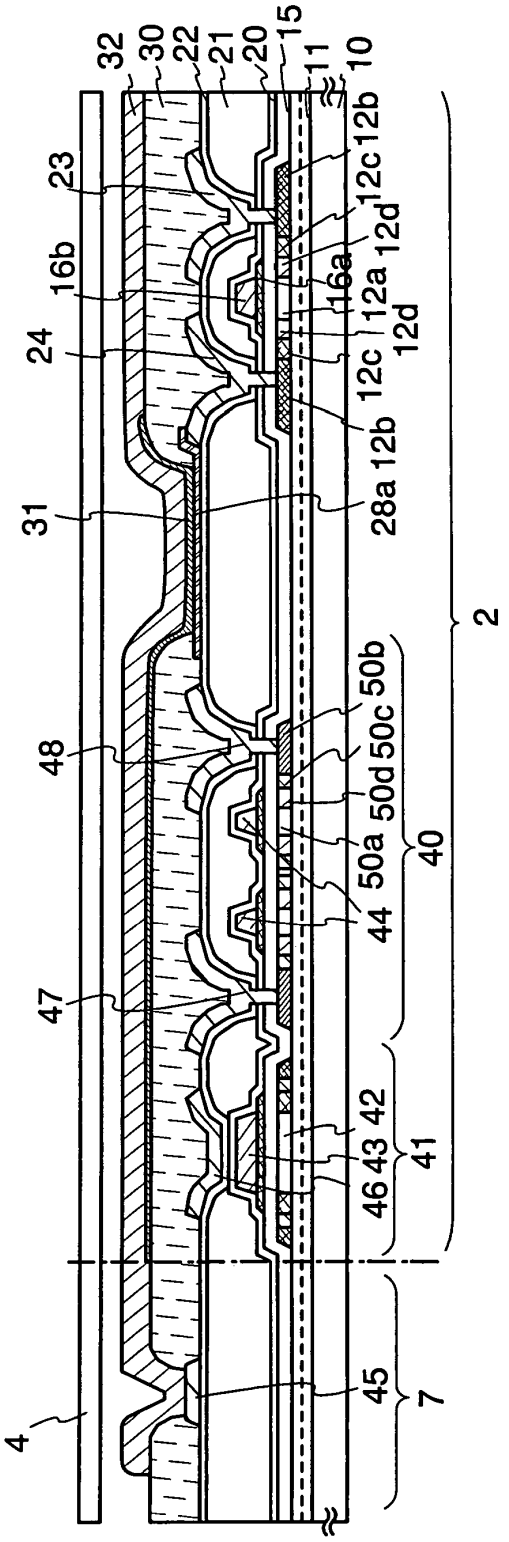
32
30
22
21
20
15
11
10
23
16b
24
31
48
47
4
12b
12c
12d
16a
12a
12d
12c
12b
28a
50b
50c
50d
50a
44
42
43
46
45
2
40
41
7

Fig. 2

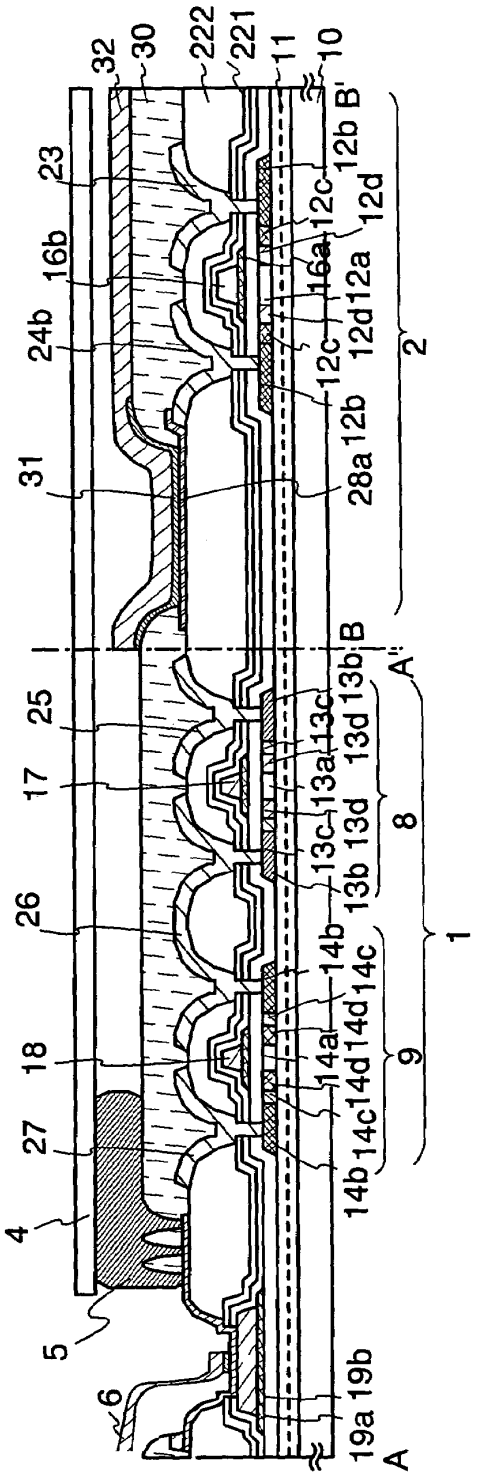
32
30
222
221
11
10
B'
12b
12c
12d
23
16b
16a
12a
24b
12d
12c
2
12b
31
28a
B
A'
13b
25
13c
13d
17
13a
13d
8
13c
13b
26
14b
14c
1
14d
18
14a
14d
9
14c
27
14b
4
5
6
19b
19a
A

Fig. 3

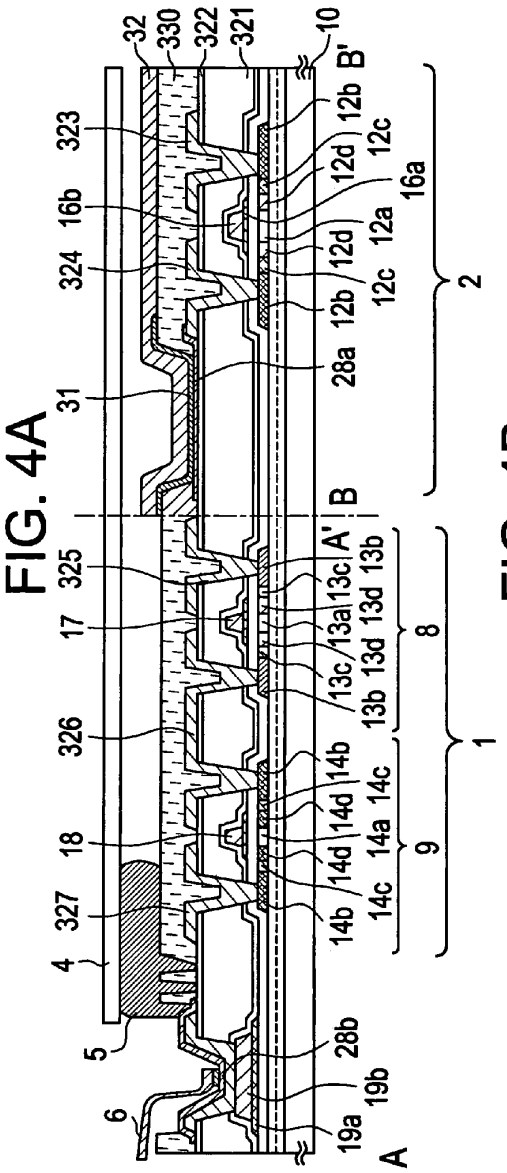
32
330
322
321
10
B'
323
16b
324
31
325
17
326
18
327
4
5
6
28b
19b
19a
A
12b
12c
12d
16a
12a
28a
B
A'
13a
13c
13d
13b
14b
14d
14c
14a
1
2
8
9

FIG. 4A

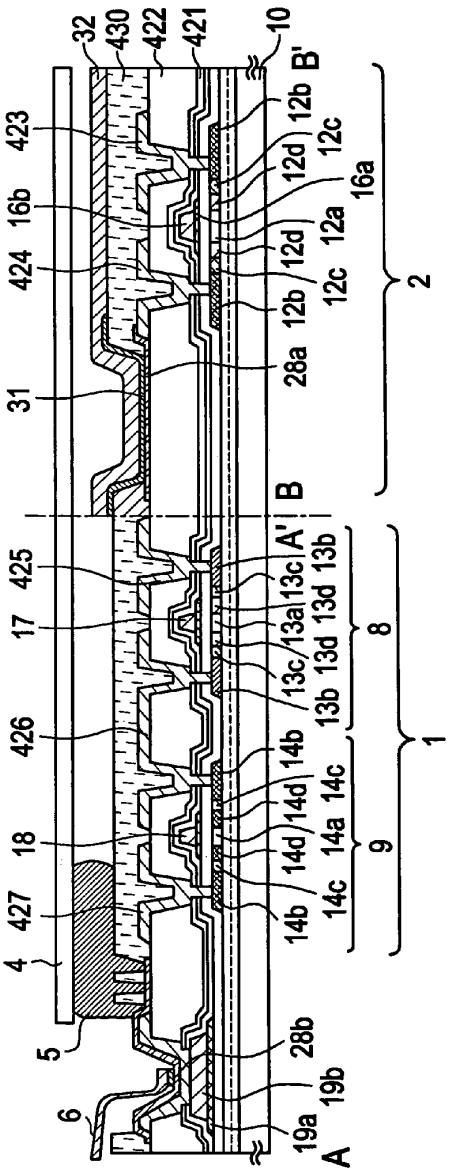
32
430
422
421
10
B'
423
16b
424
31
425
17
426
18
427
4
5
6
28b
19b
19a
A
12b
12c
12d
16a
12a
28a
B
A'
13a
13c
13d
13b
14b
14d
14c
14a
1
2
8
9

FIG. 4B

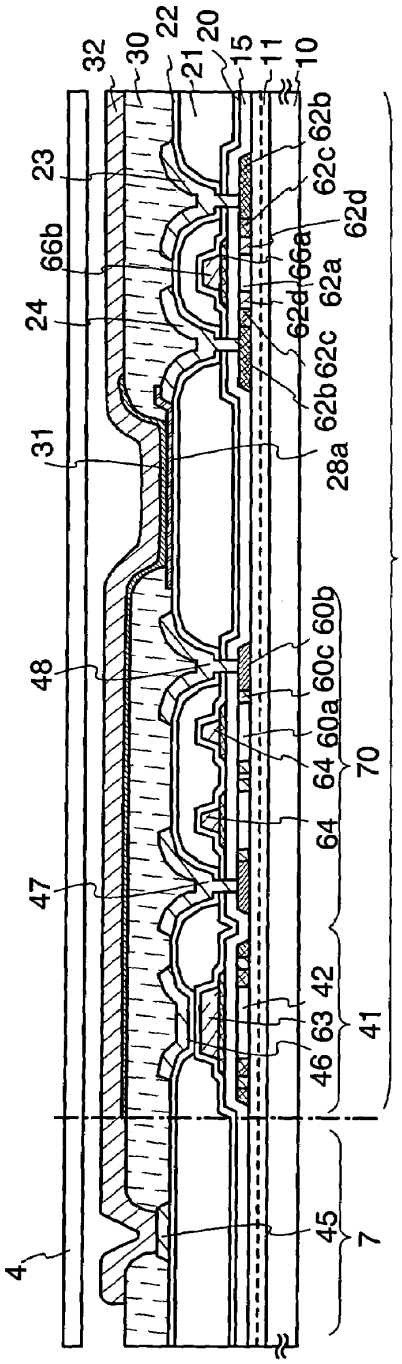
32
30
22
21
20
15
11
10
23
66b
24
31
48
47
4
62b
62c
62d
62a
66a
28a
60b
60c
60a
64
70
42
63
46
41
45
7
2

Fig. 5A

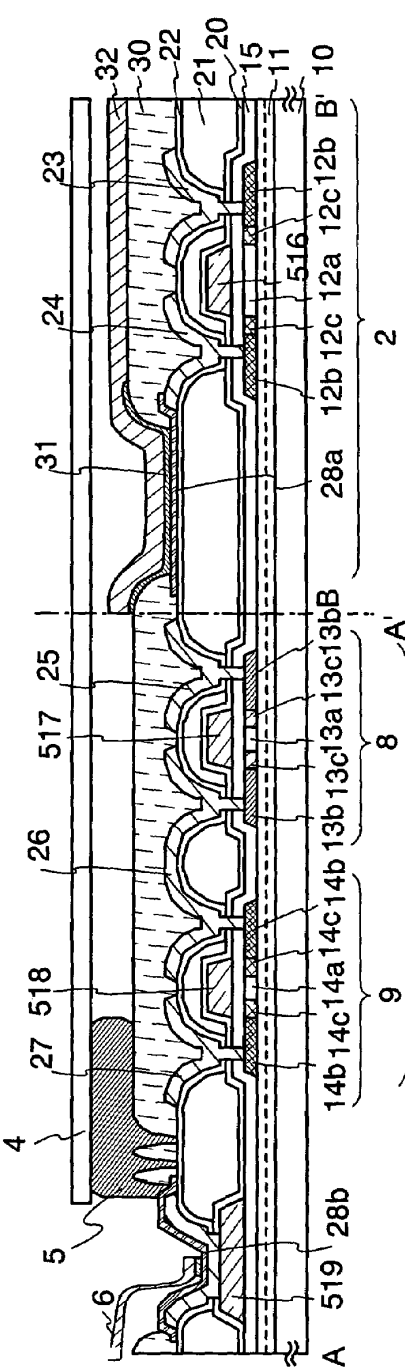
32
30
22
21
20
15
11
10
B'
23
24
31
25
517
26
518
27
4
5
6
12b
12c
12a
516
28a
13bB
13c
13a
13b
14b
14c
14a
28b
519
A
A'
2
8
9
1

Fig. 5B

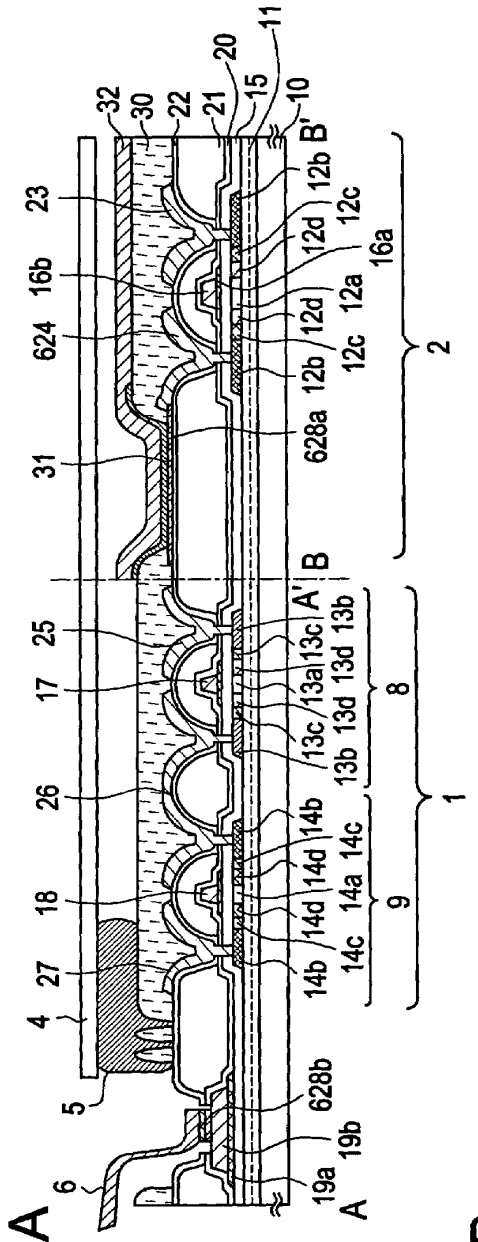
32
30
22
21
20
15
11
10
B'
23
16b
624
31
25
17
26
18
27
4
5
6
12b
12c
12d
16a
12a
628a
B
A'
13c
13a
13d
13b
8
14b
14d
14c
14a
9
1
2
628b
19b
19a
A

FIG. 6A

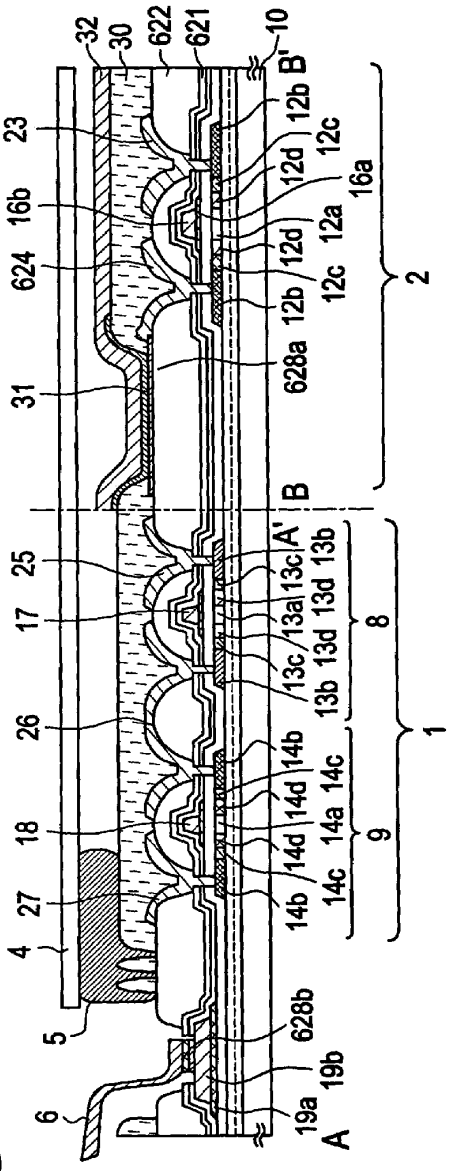
32
30
622
621
10
B'
23
16b
624
31
25
17
26
18
27
4
5
6
12b
12c
12d
16a
12a
628a
B
A'
13c
13a
13d
13b
8
14b
14d
14c
14a
9
1
2
628b
19b
19a
A

FIG. 6B

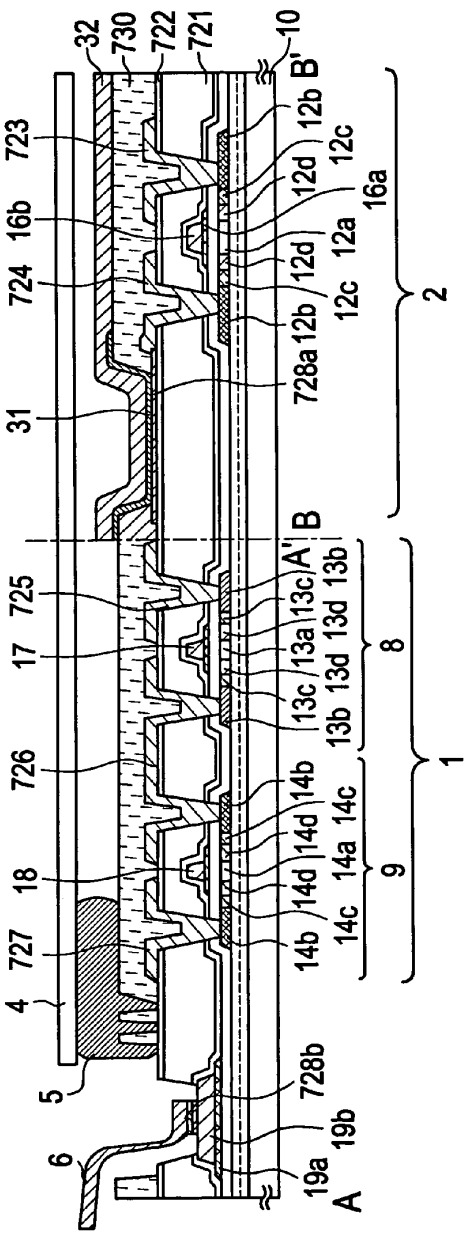
32
730
722
721
10
B'
723
16b
724
31
725
17
726
18
727
4
5
6
728b
19b
19a
A
12b
12c
12d
12a
16a
728a
A'
B
13c
13a
13d
13b
14b
14d
14a
14c
1
2
8
9

FIG. 7A

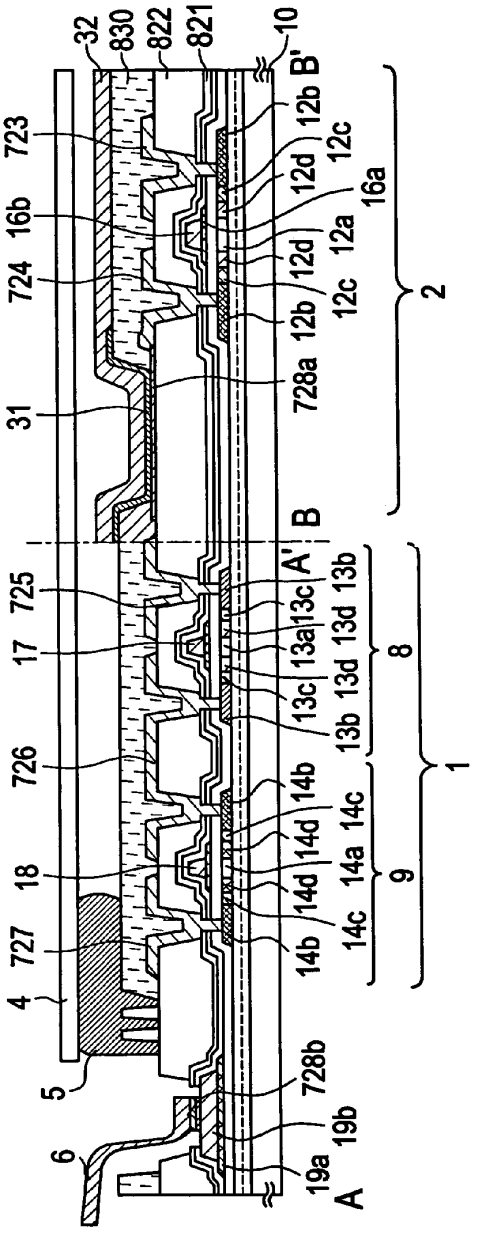
32
830
822
821
10
B'
723
16b
724
31
725
17
726
18
727
4
5
6
728b
19b
19a
A
12b
12c
12d
12a
16a
728a
A'
B
13c
13a
13d
13b
14b
14d
14a
14c
1
2
8
9

FIG. 7B

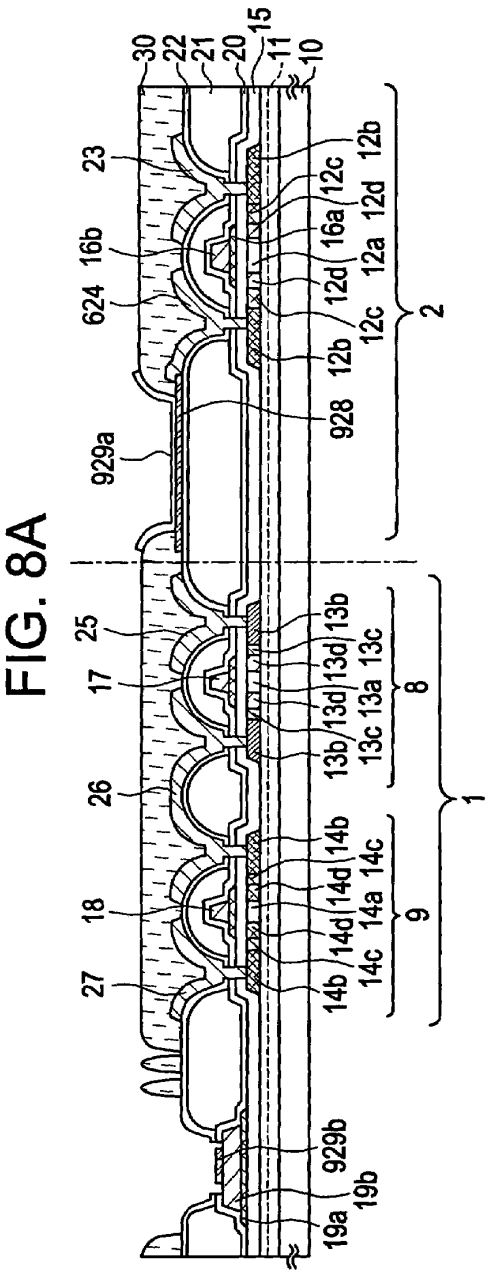
30
22
21
20
15
11
10
23
16b
624
929a
928
12b
12c
12d
16a
12a
2
25
17
26
18
27
13b
13d
13a
13c
8
14b
14d
14a
14c
9
1
929b
19b
19a

FIG. 8A

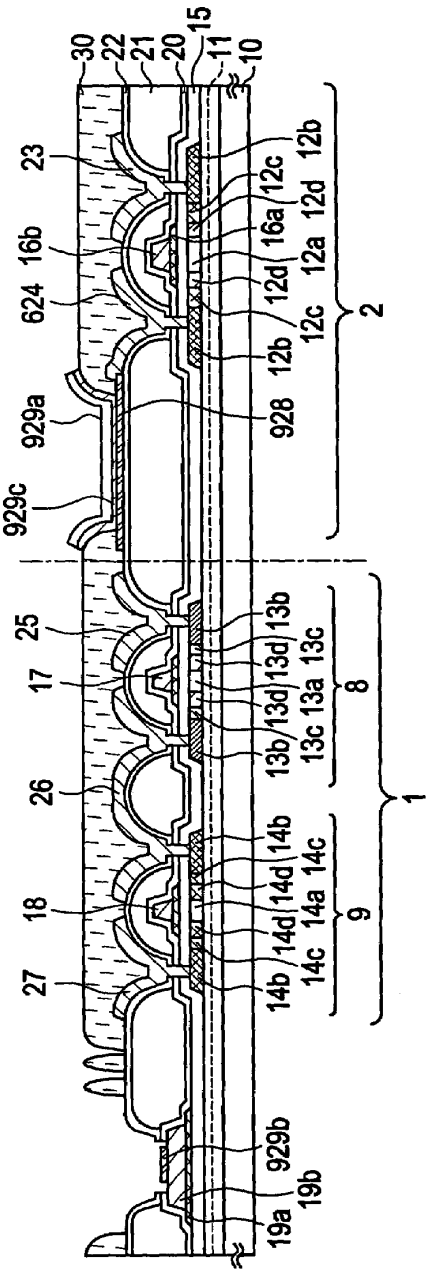
30
22
21
20
15
11
10
23
16b
624
929a
929c
928
12b
12c
12d
16a
12a
2
25
17
26
18
27
13b
13d
13a
13c
8
14b
14d
14a
14c
9
1
929b
19b
19a

FIG. 8B

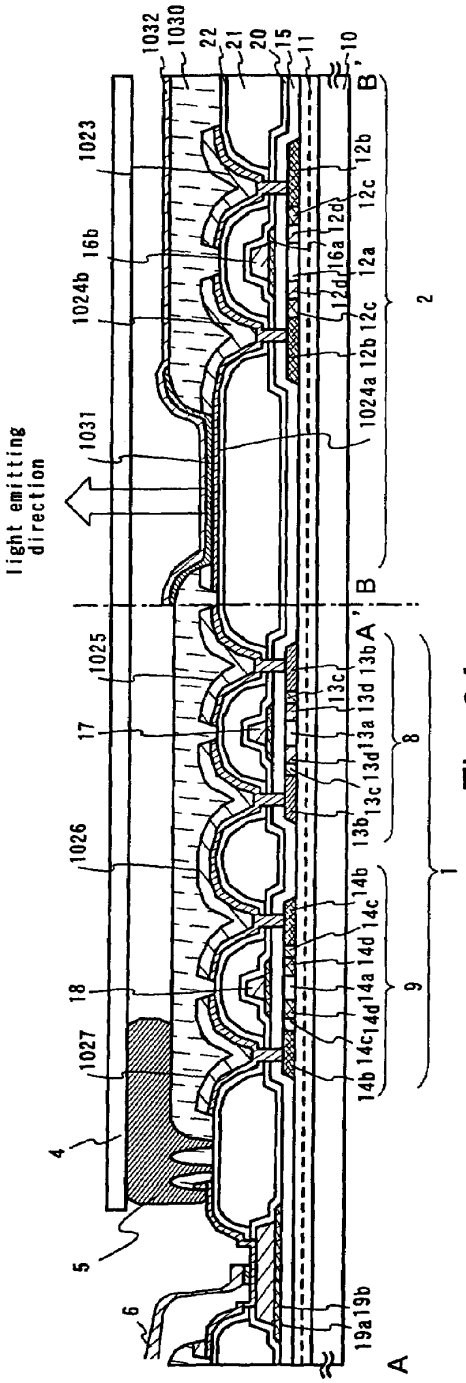
light emitting direction
1032
1030
22
21
20
15
11
10
B'
1023
16b
1024b
1031
12b
12c
12d
16a
12a
1024a
2
B
A'
1025
17
13c
13a
13d
13b
8
1026
14b
14c
14d
14a
9
1
18
1027
4
5
6
19a
19b
A

Fig. 9A

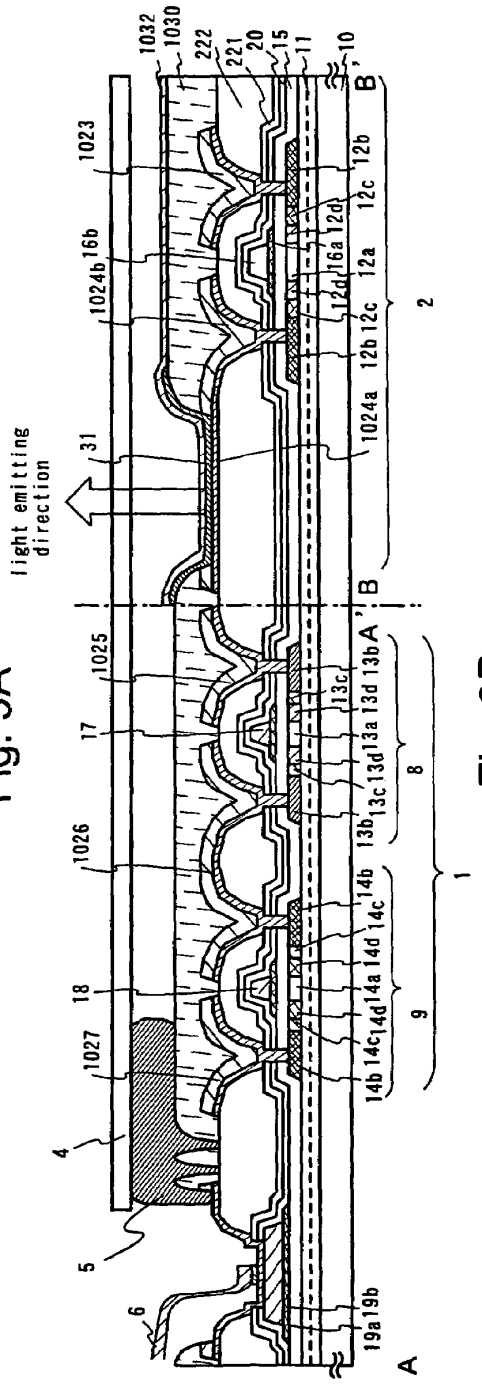
light emitting direction
1032
1030
222
221
20
15
11
10
B'
1023
16b
1024b
31
12b
12c
12d
16a
12a
1024a
2
B
A'
1025
17
13c
13a
13d
13b
8
1026
14b
14c
14d
14a
9
1
18
1027
4
5
6
19a
19b
A

Fig. 9B

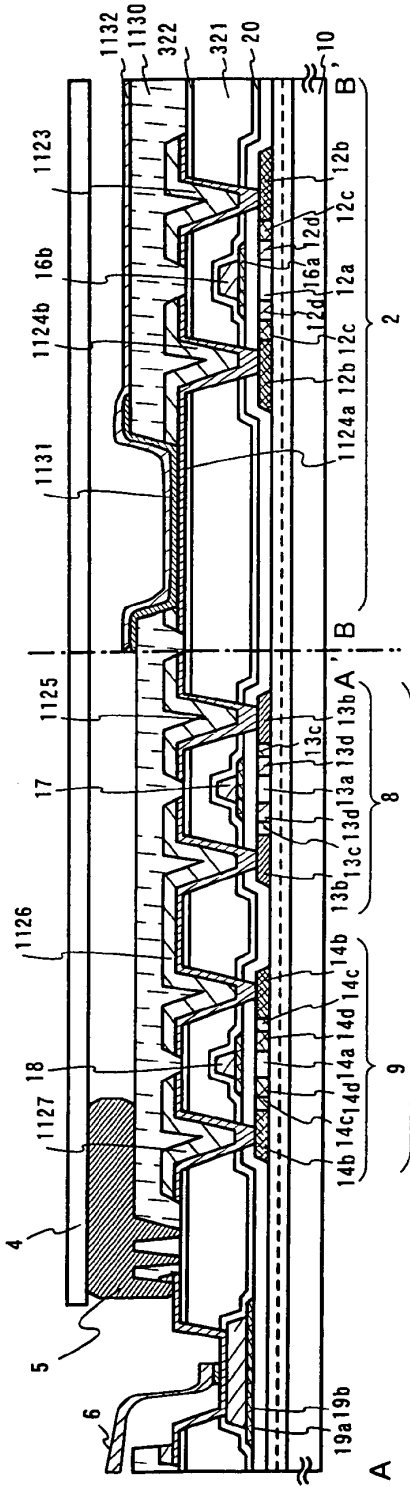

Fig. 10A

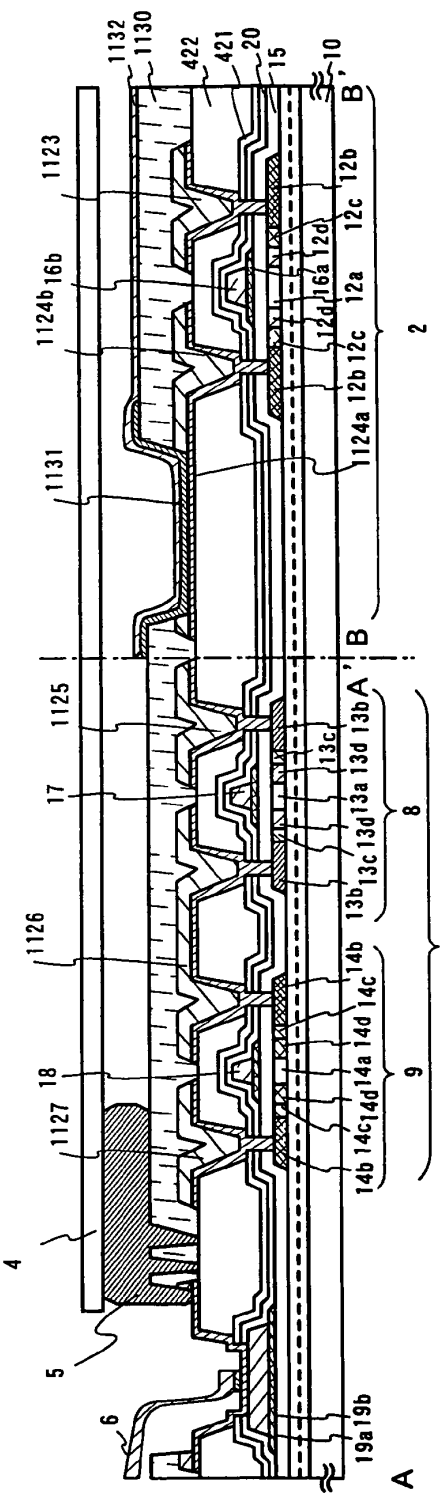

Fig. 10B

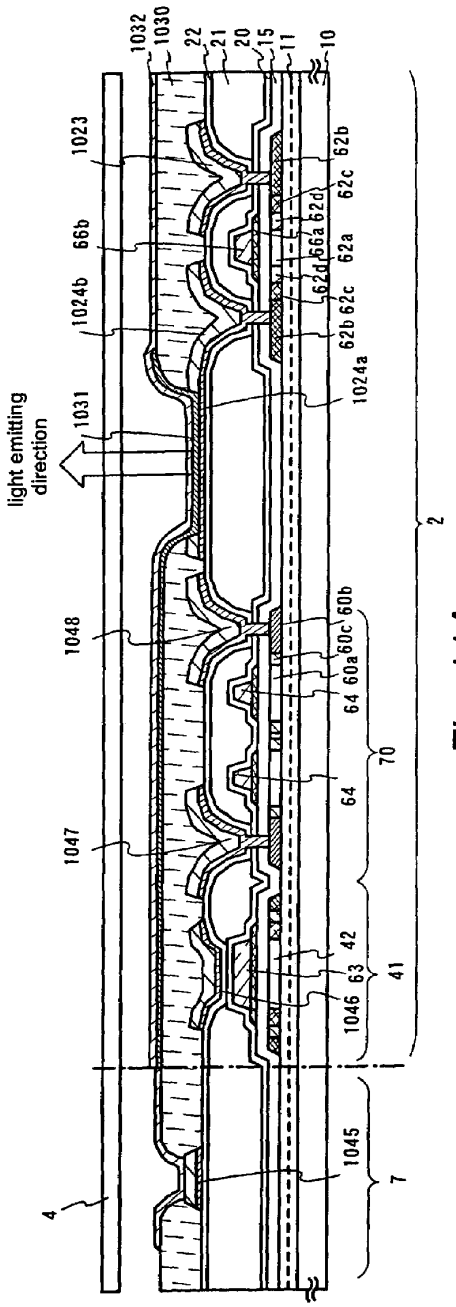

Fig. 11A

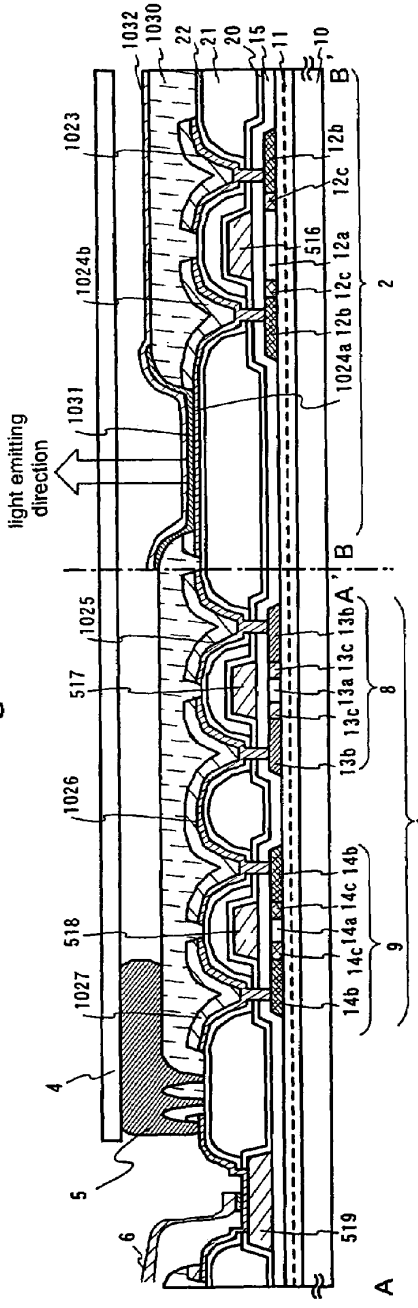

Fig. 11B

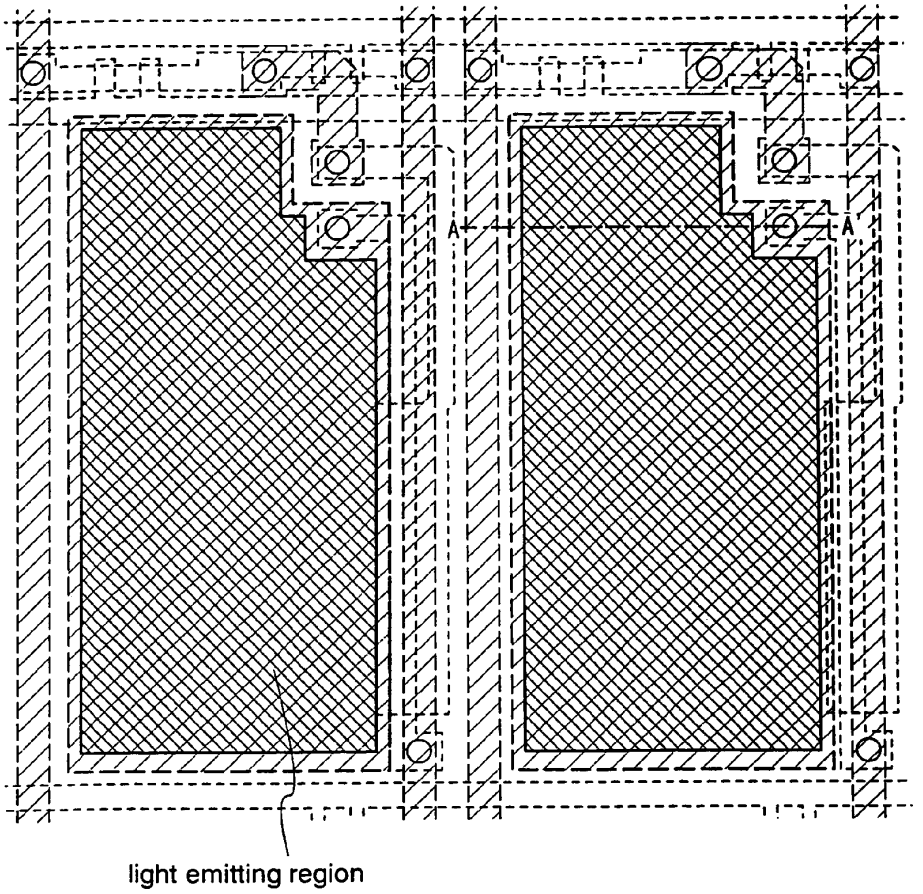

Fig. 12A

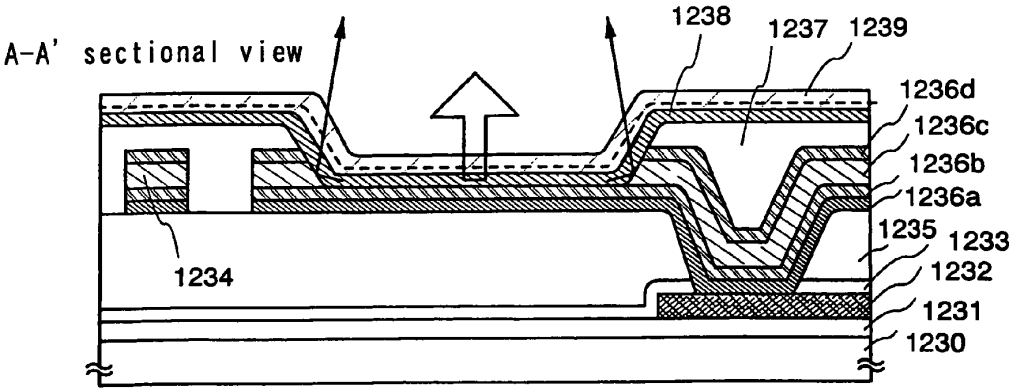

Fig. 12B

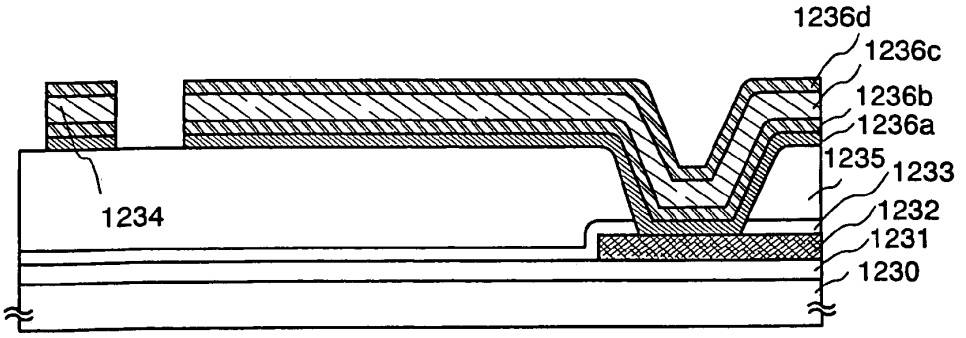

Fig. 13A

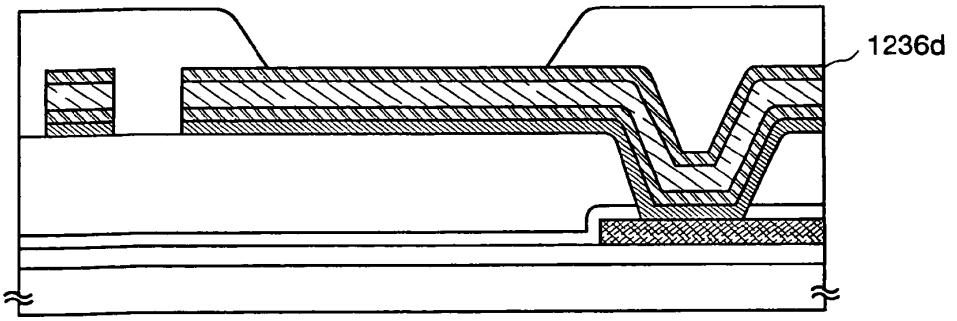

Fig. 13B

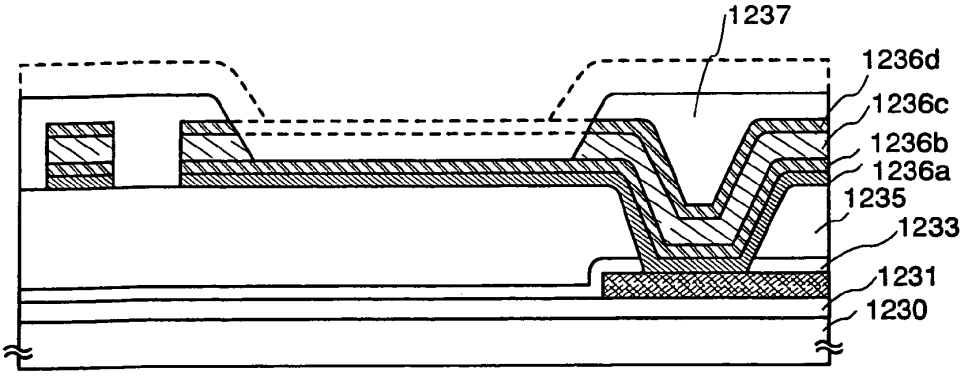

Fig. 13C

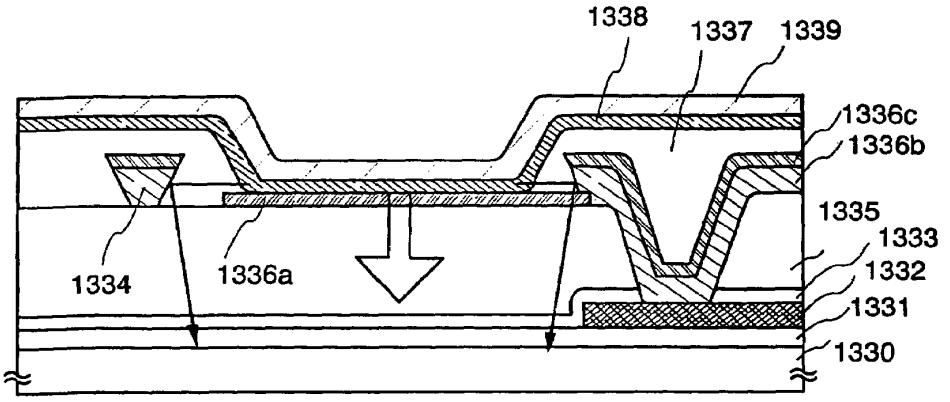
1338
1337
1339
1336c
1336b
1335
1333
1332
1331
1330
1334
1336a

Fig. 14

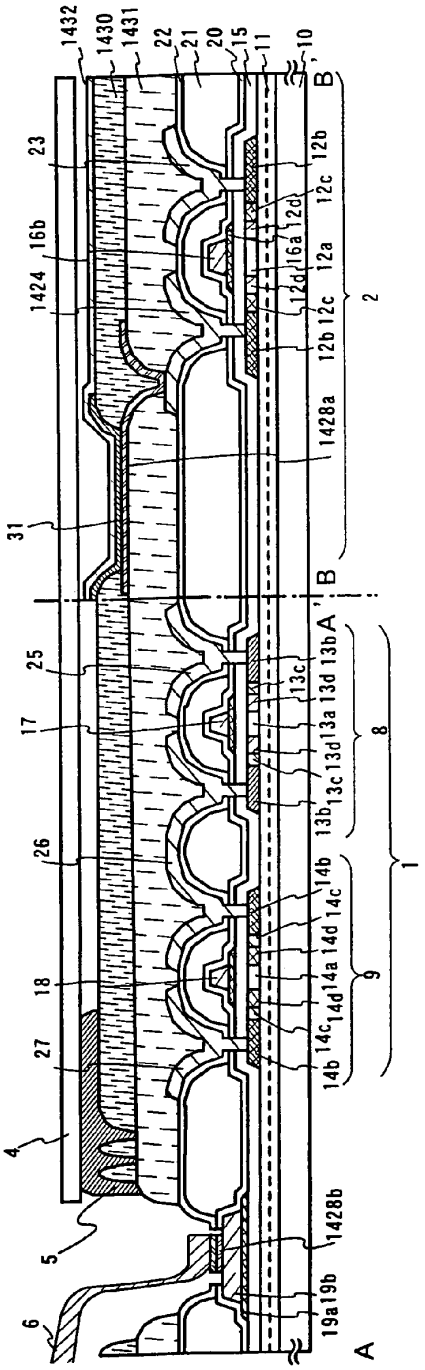

Fig. 15A

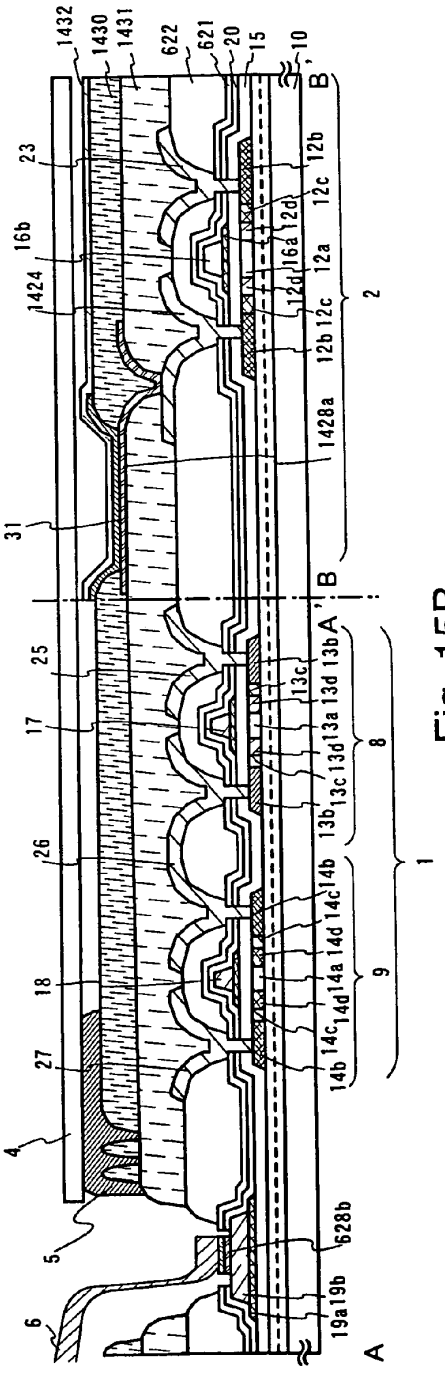

Fig. 15B

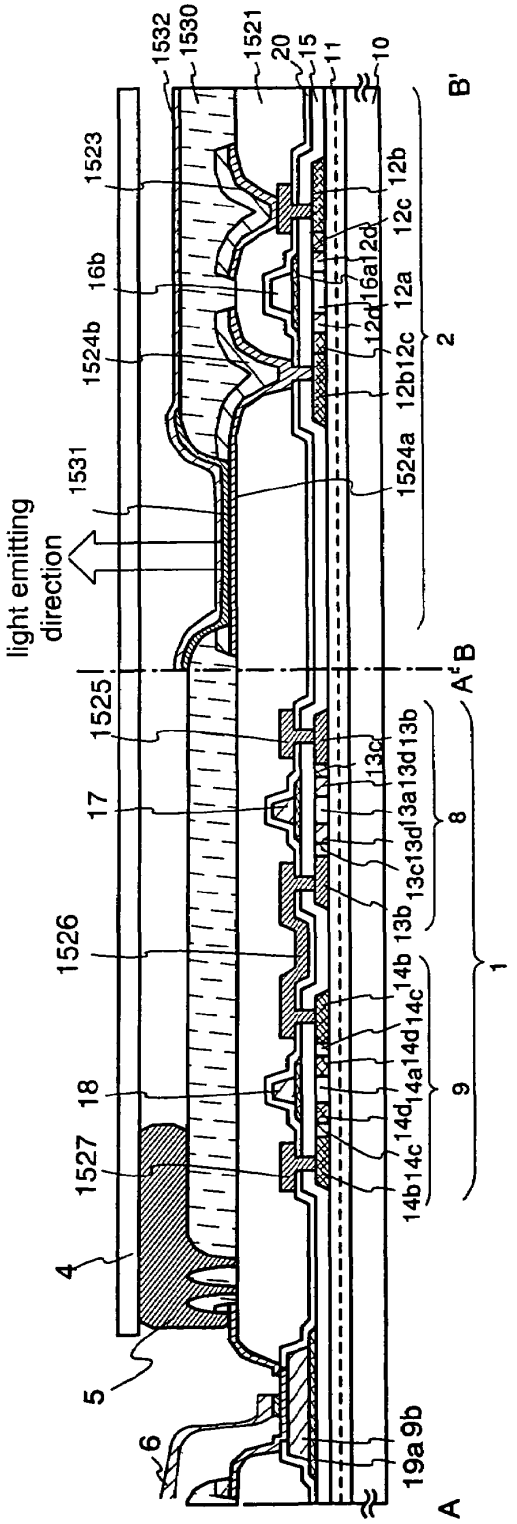
light emitting direction
1532
1530
1521
20
15
11
10
B'
1523
16b
1524b
1531
1524a
12b
12c
12d
16a
12a
2
1525
17
1526
18
1527
4
5
6
19a
9b
A
A'
B
13c
13d
13a
13b
8
14b
14c
14d
14a
9
1

Fig. 16

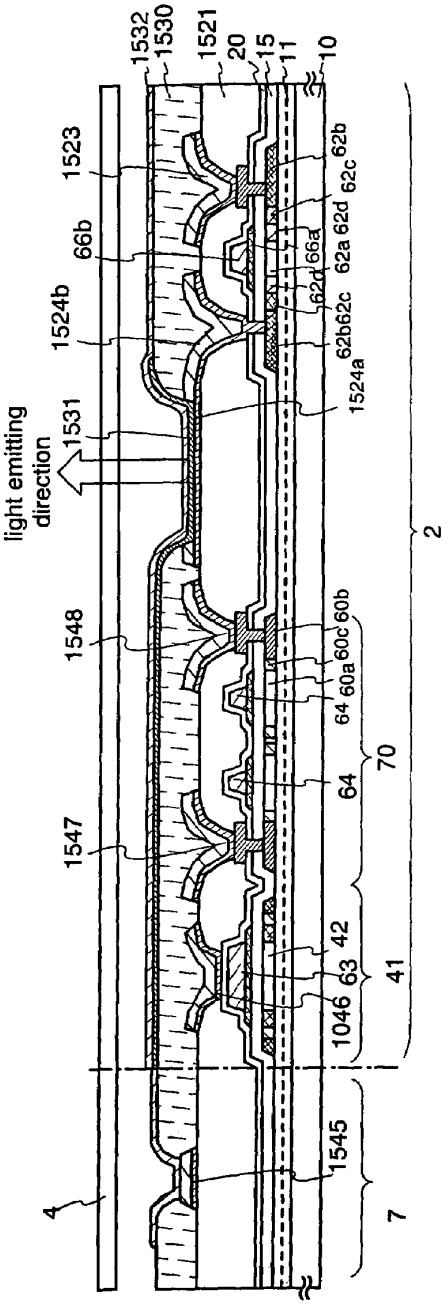

Fig. 17A

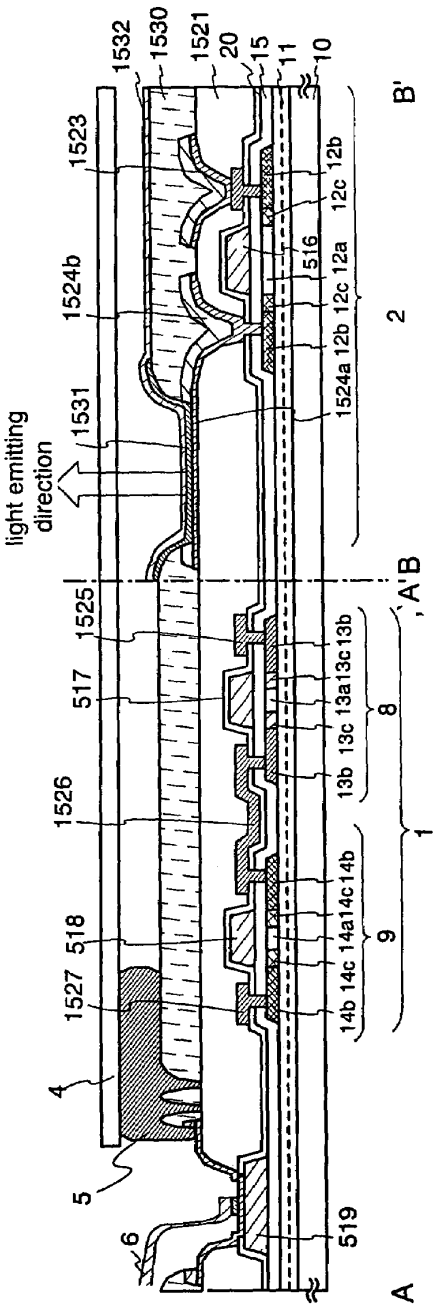

Fig. 17B

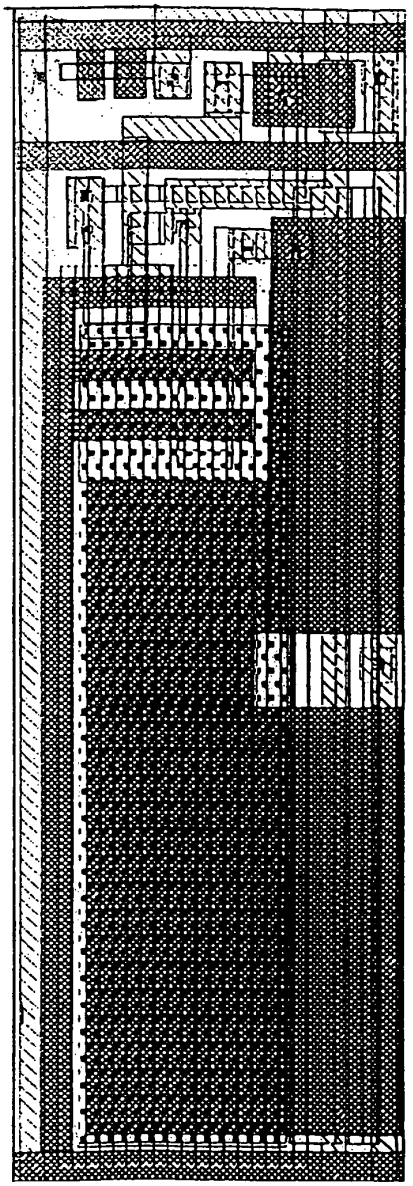

Fig. 18A

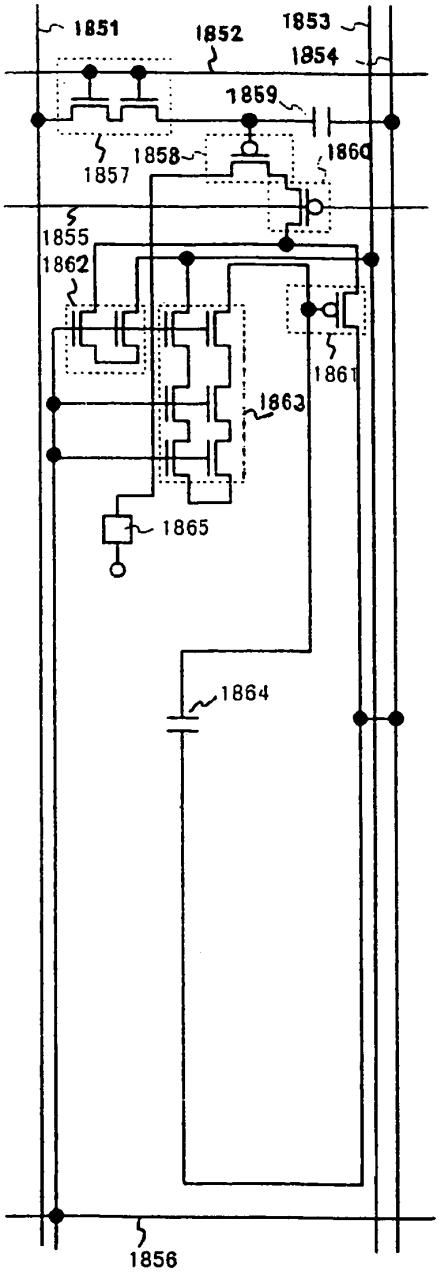

Fig. 18B

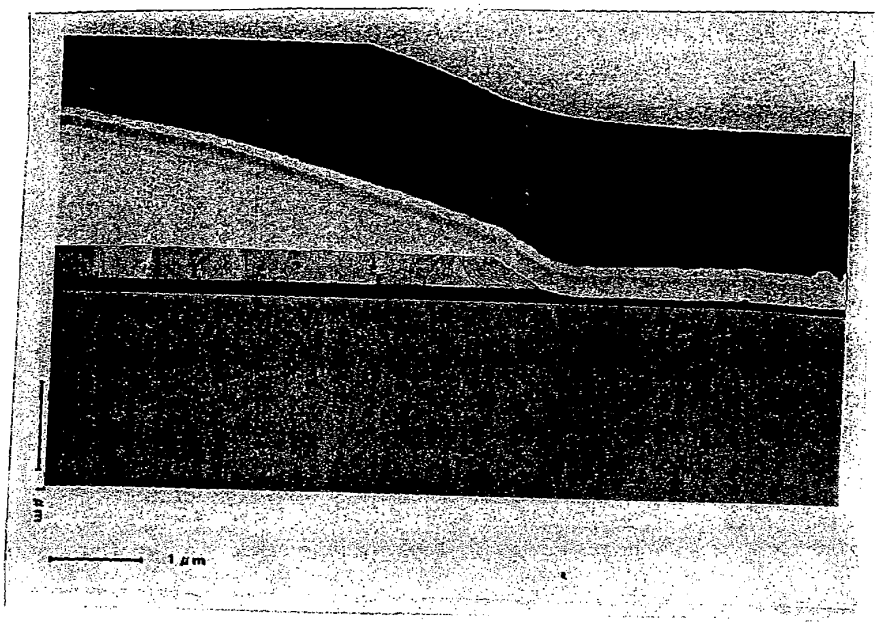

Fig. 19

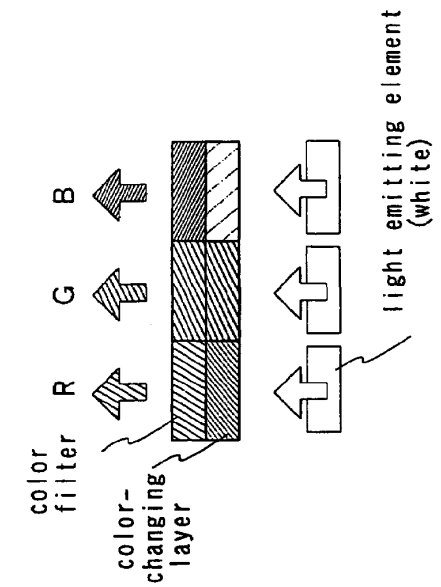

Fig. 20C

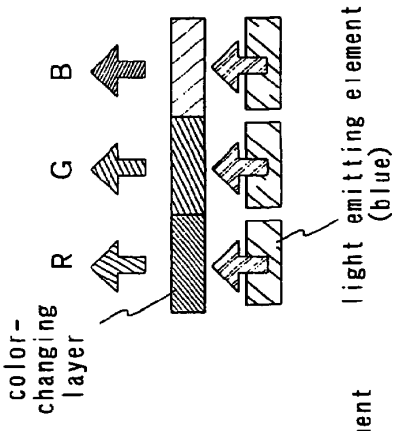

Fig. 20B

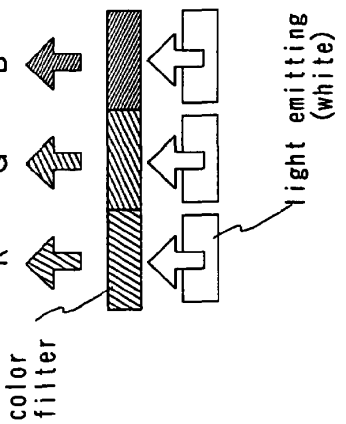

Fig. 20A

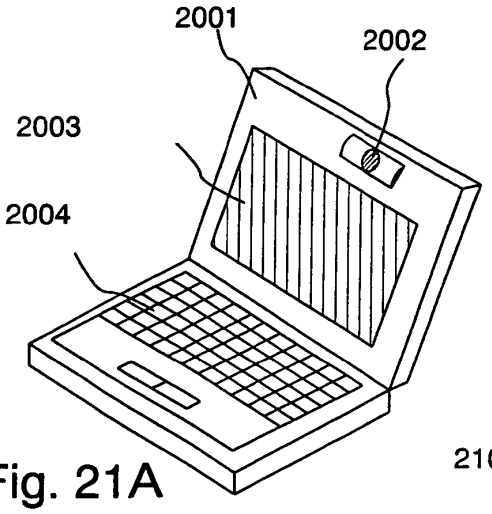

Fig. 21A

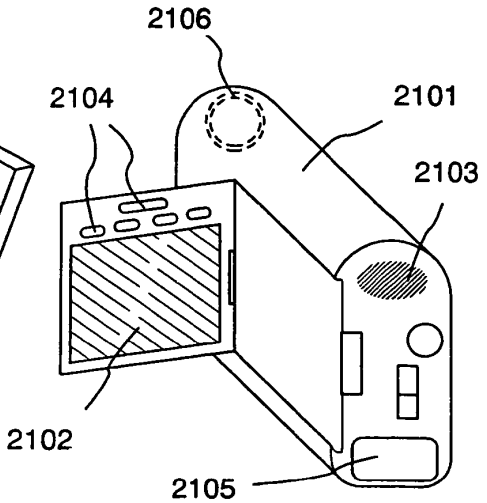

Fig. 21B

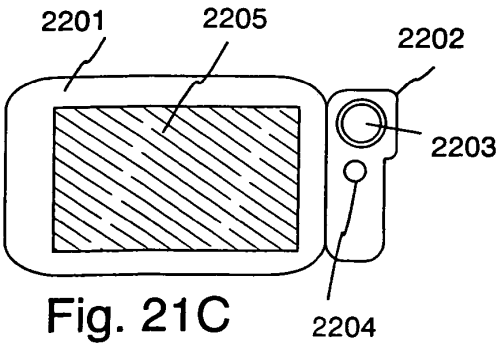

Fig. 21C

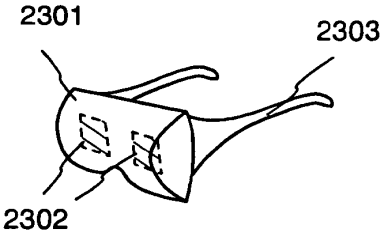

Fig. 21D

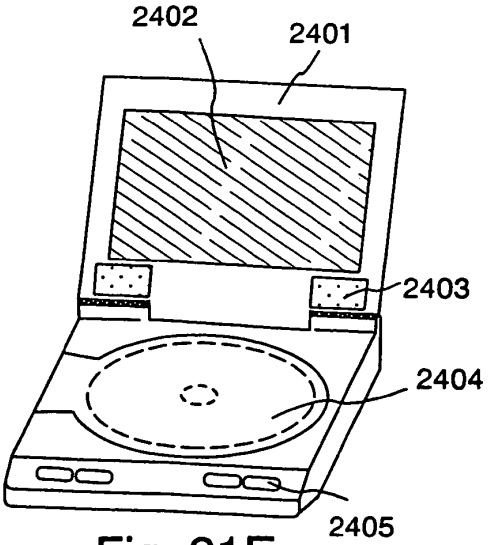

Fig. 21E

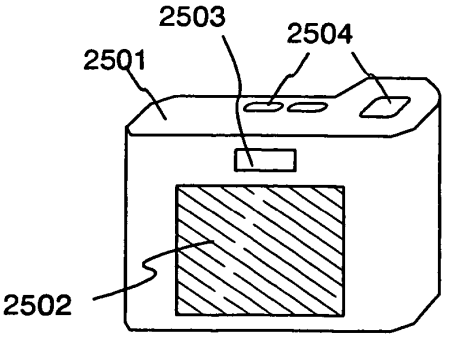

Fig. 21F

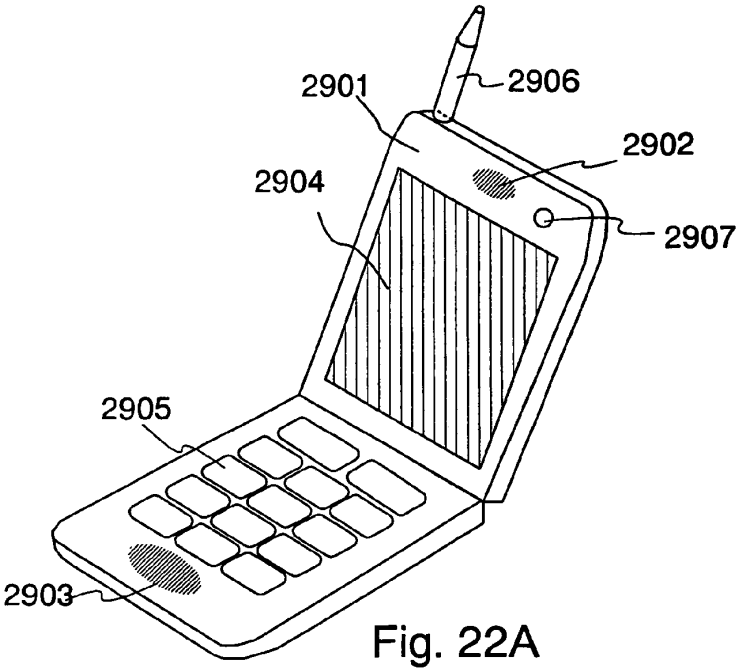

Fig. 22A

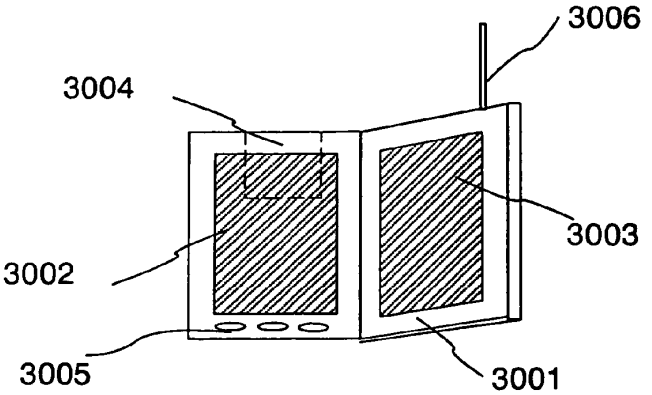

Fig. 22B

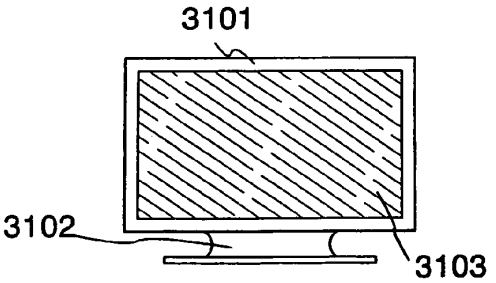

Fig. 22C

LIGHT EMITTING DEVICE AND METHOD FOR MANUFACTURING THE SAME

BACKGROUND OF THE INVENTION

1. Field of the Invention

The present invention relates to a light emitting device using a light emitting element having a layer that contains an organic compound between a pair of electrodes (hereinafter, referred to as a layer containing an organic compound), on which an electric field is applied to obtain fluorescence or phosphorescence, and to a method for manufacturing such a novel light emitting device. Here, the term "light emitting device" used in the present specification represents one of image display devices, light emitting devices, and optical sources (including lighting units). In addition, the light emitting device may be any kind of the light emitting devices, such as a module on which a flexible printed circuit (FPC), a tape automate bonding (TAB), or a tape carrier package (TCP) is attached; a module where a print-wiring plate is mounted on the tip of a TAB tape or TCP; and a module on which an integrated circuit (IC) is directly mounted on a light emitting element by a Chip-On-Glass (COG) system.

2. Description of the Prelated Art

In recent years, the attention has been focused on technology for constructing a thin film transistor (TFT) using a semiconductor thin film (with a thickness in the range of about several nanometers to several hundred nanometers) formed on a substrate having an insulating surface. The thin film transistors have been widely applied in electronic devices such as ICs and electric optical devices. In particular, the development of such a transistor has been hurried for providing a switching element of an image displaying device.

A light emitting element using an organic compound as a luminous body, characterized by its thin thickness, light weight, fast response, low-voltage DC drive, and so on, has been expected to its application in a next-generation flat panel display. Furthermore, a display device in which light emitting elements are arranged in a matrix configuration has been considered more advantageous than the conventional liquid crystal display device because of being superior in visibility with a wide angle of visual field.

The light emitting element having an organic compound comprises a layer that contains the organic compound from which electro luminescence can be generated by the application of an electric field (hereinafter, it is referred to as an EL layer), and an anode and a cathode. A light emitting mechanism of the light emitting element may be as follows. That is, when a voltage is applied on the organic compound layer being sandwiched between a pair of the electrodes, an electron injected from the cathode and an electron hole injected from the anode are brought into recombination with each other at the luminescence center of the organic compound layer to form a molecular excitation. Subsequently, the light emission is occurred by discharging energy when the molecular excitation returns to a ground state. There are two types of the excitation state known in the art, an excited singlet state and an excited triplet state. The light emission may be allowed in either state.

The light emitting device constructed of a plurality of light emitting elements being arranged in a matrix configuration may be operated by one of well-known driving systems such as a passive matrix drive (a simple matrix type) and an active matrix drive (an active matrix type). However, when the pixel density increases, it may be preferable to use the active matrix type system in which a switch is provided for every pixel (or every dot) because it can be driven at a low voltage.

The active matrix type light emitting device maybe designed in two different ways depending on the direction of light radiation. One of them is that light emitted from an EL element passes through an opposite substrate and radiates into the eyes of the observer (i.e., a lower-side radiation type). In this case, the observer is allowed to recognize an image from the opposite substrate. The other is that light emitted from the EL element passes through the substrate of this element and radiates into the eyes of the observer (i.e., an upper-side radiation type). In this case, the observer is allowed to recognize an image from the direction of the EL element.

Furthermore, monomeric and polymeric materials have been studied for an organic compound to be provided as an organic compound layer (i.e., a light emitting layer in the strict sense), which may be the center of the light emitting element. Among them, the attention has been focused on the polymeric material because of its high thermostability and convenience in handling compared with the monomeric material.

For forming a film from an organic compound, an evaporation method, a spin-coating method, and an ink-jet method have been known in the art. Among them, for realizing a full-color image formation using a polymer material, the spin-coating method and the ink-jet coating have been particularly known in the art.

The light emitting element having an organic compound has a disadvantage in that it tends to be deteriorated by various factors, so that the greatest problem thereof is to increase its reliability (make longer its life span).

SUMMARY OF THE INVENTION

For solving the above problems, an object of the present invention is to provide a method for manufacturing an active-matrix type light emitting device and the configuration of such an active-matrix type light emitting device having high reliability.

In a first aspect of the present invention disclosed in the specification, there is provided a light emitting device having a pixel part including a plurality of light emitting elements between first and second substrates which have their respective insulating surfaces and a driving circuit including a plurality of thin film transistor, where the light emitting element has a first electrode, a layer containing an organic compound in contact with the first electrode, and a second electrode in contact with the layer containing the organic compound, wherein

the thin film transistor is coated with an interlayer insulation film comprised of a laminate of an organic insulation film an inorganic insulation film that covers the organic insulation film;

a step portion is formed by a side surface of the inorganic insulation film and a side surface of the organic insulation film at an opening of the interlayer insulation film;

the inorganic insulation film has a curved surface having a curvature radius along an upper end portion of the organic insulation film; and

an end portion of the first electrode is coated with an insulating material having a curved surface with a curvature radius on an upper end portion thereof.

According to the configuration of the light emitting device of the first aspect of the present invention, the surface of the organic insulation film becomes flat, so that the surface of

the first electrode also becomes flat, preventing the EL element from occurring short. As the inorganic insulation film is formed, it becomes possible to protect the TFT by blocking the dispersion of impurities form the EL element and prevent the escape of gas from the organic insulation film. Furthermore, as the inorganic insulation film is provided, the organic insulation film is prevented from etching at the time of etching the first electrode. Furthermore, as the inorganic insulation film has a curved surface with a curvature radius, the coverage of the source electrode or the drain electrode becomes excellent. Moreover, the etching processing is performed several times to form steps on the side surface of the inorganic insulation film and the side surface of the organic insulation film at the opening of the interlayer insulation film. Thus, the TFT can be prevented from being damaged at the time of forming a contact hole. As the curve surface with a curvature radius is provided on the insulating material that covers the first electrode, the coverage of the EL layer becomes excellent to inhibit the generation of shrinkage or the like.

Furthermore, an organic insulation film may be formed on the inorganic insulation film that covers the thin film transistor. Therefore, a second aspect of the present invention is to provide a light emitting device having a pixel part including a plurality of light emitting elements between first and second substrates which have their respective insulating surfaces and a driving circuit including a plurality of thin film transistor, where the light emitting element has a first electrode, a layer containing an organic compound in contact with the first electrode, and a second electrode in contact with the layer containing the organic compound, wherein

the thin film transistor is coated with an interlayer insulation film comprised of a laminate of an inorganic insulation film and an organic insulation film;

a step portion is formed by a side surface of the inorganic insulation film and a side surface of the organic insulation film at an opening of the interlayer insulation film;

an upper end of the organic insulation film has a curved surface having a curvature radius; and

an end portion of the first electrode is coated with an insulating material having a curved surface with a curvature radius on an upper end portion thereof.

According to the configuration of the light emitting device of the second aspect of the resent invention, the surface of the organic insulation film becomes flat, so that the surface of the first electrode also becomes flat, preventing the EL element from occurring short. In addition, the inorganic insulation film is formed on a place near the active layer of the TFT to effectively protect the TFT by blocking the dispersion of impurities from the EL element. In this case, furthermore, the inorganic insulation film for dispersing hydrogen atoms and the inorganic insulation film for blocking the dispersion of impurities from the EL element are laminated while being in contact with each other.

In each of the above aspects of the present invention, the pixel part may have a thin film transistor electrically connected to the first electrode as shown in FIGS. **1** to **5**. Wiring in contact with the source region or the drain region of the thin film transistor may be brought into contact to a part of the first electrode and may be provided on the first electrode. In this case, the first electrode is formed after the formation of wiring. Alternatively, as shown in FIGS. **6** to **8**, the pixel part may be comprised a thin film transistor electrically connected to the first electrode, and the first electrode may be in contact with a part of wiring in contact with an source region or a drain region of the thin film transistor and is provided on the wiring. In this case, the first electrode is formed before the formation of wiring.

A third aspect of the present invention is a light emitting device having a pixel part including a plurality of light emitting elements between first and second substrates which have their respective insulating surfaces and a driving circuit including a plurality of thin film transistor, where the light emitting element has a first electrode, a layer containing an organic compound in contact with the first electrode, and a second electrode in contact with the layer containing the organic compound, wherein

the thin film transistor is coated with an interlayer insulation film comprised of a laminate of an organic insulation film an inorganic insulation film that covers the organic insulation film;

a step portion is formed by a side surface of the inorganic insulation film and a side surface of the organic insulation film at an opening of the interlayer insulation film;

the inorganic insulation film has a curved surface having a curvature radius along an upper end portion of the organic insulation film;

an end portion of the first electrode is coated with an insulating material having a curved surface with a curvature radius on an upper end portion thereof; and

an end portion of the first electrode has a slant face extending to a center of the first electrode, where the slant face reflects light emitted from the layer containing the organic compound.

In addition, another aspect of the present invention may be configured as an example shown in FIG. **16** and FIG. **17**, therefore a fourth aspect of the present invention is a light emitting device having a pixel part including a plurality of light emitting elements between first and second substrates which have their respective insulating surfaces and a driving circuit including a plurality of thin film transistor, where the light emitting element has a first electrode, a layer containing an organic compound in contact with the first electrode, and a second electrode in contact with the layer containing the organic compound, wherein

the thin film transistor is coated with an interlayer insulation film comprised of a laminate of an inorganic insulation film and an organic insulation film;

a step portion is formed by a side surface of the inorganic insulation film and a side surface of the organic insulation film at an opening of the interlayer insulation film;

an upper end of the organic insulation film has a curved surface having a curvature radius;

an end portion of the first electrode is coated with an insulating material having a curved surface with a curvature radius on an upper end portion thereof; and

an end portion of the first electrode has a slant face extending to a center of the first electrode, where the slant face reflects light emitted from the layer containing the organic compound.

In the above third and fours aspects of the present invention, the first electrode may have a slant face extending to a center of the first electrode and a slanting angle thereof may be over than 30° and less than 70°.

In the above third and fours aspects of the present invention, furthermore, the insulating material that covers the end portion of the first electrode may have a curved surface with a curvature radius on an upper end portion thereof, and the curvature radius may be 0.2 μm to 3 μm. As the curved surface having a curvature radius is formed on the upper end portion of the insulating material that covers the end portion of the first electrode, the surface of the first electrode is able to prevent the foreign substance (dust or the

like) from being remained at the foot of the first electrode at the time of washing the surface of the first electrode.

In each of the above aspects of the invention, the layer containing the organic compound may be a material that emits red light, a material that emits green light, or a material that emits blue light. Alternatively, the layer containing the organic material may be a material that emits white light and may be used in combination with a color filter provided on the first substrate or the second substrate. Alternatively, in the above aspects of the invention, the layer containing the organic compound may be a material that emits monocolor light and may be used in combination with a color-changing layer or a coloring layer formed on the first substrate or the second substrate.

For manufacturing the novel light emitting device, furthermore, an aspect of the present invention is a method for manufacturing a light emitting device having a light emitting element, where the light emitting element includes a thin film transistor on a substrate having an insulating surface, a first electrode electrically connected to the thin film transistor, a layer containing an organic compound in contact with the first electrode, and a second electrode in contact with the layer containing the organic compound, comprising the steps of:

forming a contact hole extending to a source region or a drain region of the thin film transistor by etching an inorganic insulation film that covers the source region and the drain region of the thin film transistor then forming an organic insulation film and forming again a contact hole extending to the source region on the drain region by etching the organic insulation film;

forming a connecting electrode for making a connection with the source region or the drain region of the thin film transistor;

forming a first electrode in contact with the connecting electrode;

forming an insulating material that covers an end portion of the first electrode;

forming a layer containing an organic compound in contact with a side surface of the insulating material and the first electrode; and

forming a second electrode on the layer containing the organic compound.

For manufacturing the light emitting device of each of third and fourth aspects of the present invention, another aspect of the present invention is a method for manufacturing a light emitting device having a light emitting element, where the light emitting element includes a thin film transistor on a substrate having an insulating surface, a first electrode electrically connected to the thin film transistor, a layer containing an organic compound in contact with the first electrode, and a second electrode in contact with the layer containing the organic compound, comprising the steps of:

hydrogenating an inorganic insulation film after forming the inorganic insulation film comprised of a laminate of a silicon nitride film and an silicon oxynitride film covering the thin film transistor;

forming a contact hole extending to the electrode and a contact hole extending to a source region or a drain region by etching the inorganic insulation film;

forming an electrode connecting to the source region or the drain region;

forming an interlayer insulation film that covers the electrodes;

forming a contact hole extending to the electrode and a contact hole extending to the source region or the drain region by etching the interlayer insulation film;

forming a first electrode comprised of a laminate of metallic layers connecting to the source region or the drain region;forming an interlayer insulation film that covers the electrode;

forming an insulating material that covers an end portion of the first electrode;

thinning a center of the first electrode by etching using the insulating material as a mask such that a slant surface is exposed along an edge of the first electrode;

forming a layer containing an organic compound; and

forming a second electrode on the layer containing the organic compound, where the second electrode is comprised of a metallic thin film through which light transmits.

Furthermore, after the formation of the silicon oxynitride film, the hydrogenation may be performed. Therefore, for obtaining the light emitting device of the third and the fourth aspects of the present invention, a further aspect of the present invention is a method for manufacturing a light emitting device having a light emitting element, where the light emitting element includes a thin film transistor on a substrate having an insulating surface, a first electrode electrically connected to the thin film transistor, a layer containing an organic compound in contact with the first electrode, and a second electrode in contact with the layer containing the organic compound, comprising the steps of:

hydrogenating after forming an silicon oxynitride film that covers the thin film transistor;

forming a silicon nitride film on the silicon oxynitride film by a sputtering method;

forming a contact hole extending to a source region or a drain region by etching the silicon oxynitride film and the silicon nitride film;

forming an electrode connecting to the source region or the drain region; forming an interlayer insulation film that covers the electrode;

forming a contact hole extending to the electrode and a contact hole extending to the source region or the drain region by etching the interlayer insulation film;

forming a first electrode comprised of a laminate of metallic layers connecting to the source region or the drain region;

forming an insulating material that covers an end portion of the first electrode;

thinning a center of the first electrode by etching using the insulating material as a mask such that a slant surface is exposed along an edge of the first electrode;

forming a layer containing an organic compound; and

forming a second electrode on the layer containing the organic compound, where the second electrode is comprised of a metallic thin film through which light transmits.

For manufacturing the light emitting device of each of third and fourth aspects of the present invention, a still further aspect of the present invention is a method for manufacturing a light emitting device having a light emitting element, where the light emitting element includes a thin film transistor on a substrate having an insulating surface, a first electrode electrically connected to the thin film transistor, a layer containing an organic compound in contact with the first electrode, and a second electrode in contact with the layer containing the organic compound, comprising the steps of:

hydrogenating after forming an silicon oxynitride film that covers the thin film transistor;

forming a contact hole extending to a source region or a drain region by etching the silicon oxynitride film;

forming an electrode connecting to the source region or the drain region;

forming a silicon nitride film on the electrode and the silicon oxynitride film by a sputtering method;

forming an interlayer insulation film on the silicon nitride oxide film;

forming a contact hole extending to the electrode and a contact hole extending to the source region or the drain region by etching the interlayer insulation film and the silicon nitride film;

forming an first electrode comprised of a laminate of metallic layers connecting to the source region or the drain region;

forming an insulating material that covers an end portion of the first electrode;

thinning a center of the first electrode by etching using the insulating material as a mask such that a slant surface is exposed along an edge of the first electrode;

forming a layer containing an organic compound; and

forming a second electrode on the layer containing the organic compound, where the second electrode is comprised of a metallic thin film through which light transmits.

In each of the above aspects of the manufacturing method of the invention, the first electrode may be an anode or a cathode of the light emitting element.

In addition, in each of the above aspects of the manufacturing method of the invention, the organic resin material may have a curved surface with a curvature radius on an upper end portion thereof, and the curvature radius may be 0.2 μm to 3 μm.

Furthermore, in each of the above aspects of the manufacturing method of the invention, insulating material that covers the end portion of the first electrode may have a curved surface with a curvature radius on an upper end portion thereof, and the curvature radius may be 0.2 μm to 3 μm.

Furthermore, the light emitting element (the EL element) comprises a layer (hereinafter, referred to as an EL layer) containing an organic compound from which electro luminescence can be generated by the application of an electric field, an anode, and a cathode. There are two types of the excitation state of luminescence from the organic compound. The one is luminescence (fluorescence) at the time of returning from an excited singlet state to a base state and the other is luminescence (phosphorescence) at the time of returning from an excited triplet state to a base state. Both of them can be applied on the light emitting device manufactured by the present invention. In addition, the layer (EL layer) containing the organic compound layer may also contain an inorganic material such as silicon.

For the light emitting device of the present invention, the driving method for picture representation is not limited to a specific one. For instance, a dot sequential driving system, a line sequential driving system, a phase sequential driving system, or the like may be applied. Typically, the line sequential driving system is applied. If required, a time-division gradation driving method or an area gradation driving method may be also used in an appropriate manner. Furthermore; a picture signal to be entered in a source line of the light emitting device may be an analog signal or a digital signal. In addition, the driving circuit and so on may be appropriately designed so as to be fit to the picture signal.

BRIEF DESCRIPTION OF THE DRAWINGS

FIG. **1**A is a top view for illustrating a light emitting device as one of embodiments of the present invention, and FIG. **1**B shows a cross sectional view of a driving circuit and a pixel part (Example 1);

FIG. **2** is a cross sectional view of a pixel part and a connecting part of a light emitting device as one of embodiments of the present invention (Example 1);

FIG. **3** is a cross sectional view for illustrating Example 1;

FIGS. **4**A and **4**B are cross sectional views for illustrating Example 2;

FIGS. **5**A and **5**B are cross sectional views for illustrating Example 1;

FIGS. **6**A and **6**B are cross sectional views for illustrating Example 3;

FIGS. **7**A and **7**B are cross sectional views for illustrating Example 3;

FIGS. **8**A and **8**B are cross sectional views for illustrating Example 3;

FIGS. **9**A and **9**B are cross sectional views for illustrating Example 4;

FIGS. **10**A and **10**B are cross sectional views for illustrating Example 5;

FIGS. **11**A and **11**B are cross sectional views for illustrating Example 5;

FIG. **12**A is a top view of part of the pixel (Example 4), and FIG. **12**B is a cross sectional view of FIG. **12**A;

FIGS. **13**A to **13**C are cross sectional views for illustrating the manufacturing process (Example 4);

FIG. **14** is a cross sectional view for illustrating Example 6;

FIGS. **15**A and **15**B are cross sectional views for illustrating Example 7;

FIG. **16** is a cross sectional view for illustrating Example 8;

FIGS. **17**A and **17**B are cross sectional views for illustrating Example 8;

FIG. **18**A is a top view of a pixel and FIG. **18**B shows an equivalent circuit (Example 8);

FIG. **19** is a photograph of TEM observation (Example 4);

FIGS. **20**A to **20**C are diagrams illustrating the Example 9.

FIGS. **21**A to **21**F are diagrams showing examples of electronic equipments (Example 10); and

FIGS. **22**A and **22**C are diagrams showing examples of electronic equipments (Example 10).

DESCRIPTION OF THE PREFERRED EMBODIMENTS

Hereinafter, we will describe preferred embodiments of the present invention with reference to the attached drawings.

Referring now to FIGS. **1**A, **1**B and **2**, at first, the configuration of an active-matrix type light emitting device as one of preferred embodiments of the present invention will be described. FIG. **1**A is a top view of the light emitting device and FIG. **1**B is a cross-sectional view of two parts of the apparatus along the dotted line A–A' and the dotted line B–B' in FIG. **1**A.

In FIGS. **1**A, **1**B, the reference numeral **1** denotes a source signal line driving circuit, **2** denotes a pixel part, and **3** denotes a gate signal line driving circuit. Also the reference numeral **4** denotes a sealed substrate and **5** denotes a sealing adhesive. An inner area surrounded and defined by the

sealing adhesive **5** is an empty space. Furthermore, the reference numeral **7** denotes a connecting region for making connection between an upper electrode common to light emitting elements and wiring on the substrate.

Furthermore, the light emitting device of the present embodiment is designed such that video signals and clock signals are received from a flexible printed circuit (FPC) **6** provided as an external input terminal. Here, although not shown in the figure, a printed wiring board (PWB) may be attached on the FPC. The term "light emitting device" used in the specification represents not only a light emitting device itself but also one on which FPC or FPC with PWB is attached.

Referring now to FIG. **1**B, the cross-sectional structure of the light emitting device will be described. On a substrate **10**, the driving circuits and the pixel part are formed. In the figure, the source signal line driving circuit **1** as the driving circuits and the pixel part are illustrated.

Furthermore, in the source signal line driving circuit **1**, a CMOS circuit is formed and provided as a combination of an n-channel TFT **8** and a p-channel TFT **9**. The n-channel TFT **8** comprises: a channel forming region **13***a* on which an upper layer of a gate electrode **17** is piled up through a gate insulation film **15**; a low-level impurity region **13***d* on which a lower layer of the gate electrode **17** is piled up through the gate insulation film **15**; a low-level impurity region **13***c* on which the lower layer of the gate electrode **17** is not piled up, and a high-level impurity region **13***b* provided as a source region or a drain region. In addition, the p-channel TFT **9** comprises: a channel forming region **14***a* on which an upper layer of a gate electrode **18** is piled up through a gate insulation film **15**; a lower-level impurity region **14***d* on which a lower layer of the gate electrode **18** is piled up through the gate insulation film **15**; a low-level impurity region **14***c* on which the lower layer of the gate electrode **18** is not piled up; and a high-level impurity region **14***b* provided as a source region or a drain region. Furthermore, the reference numerals **25**, **26**, and **27** denote source electrodes or drain electrodes. The TFT that forms the driving circuit may be prepared using the well-known CMOS circuit, PMOS circuit, or NMOS circuit. In the present embodiment, there is provided a driver-integrated type where the driving circuit is formed on the substrate. According to the present invention, however, it is not limited to such a design. Alternatively, it may be formed on the outside, not on the substrate.

Furthermore, the pixel part **2** comprises a switching TFT **40** and a plurality of pixels including a first electrode (anode) **28***a* and a current-controlling TFT, where the first electrode **28***a* is provided as a lower electrode electrically connected to a drain region or a source region **12***b*(a high-level impurity region) of the current-controlling TFT. A plurality of TFTs is formed in one pixel. The current-controlling TFT comprises: a channel forming region **12***a* on which an upper layer **16***b* of a gate electrode **16***a* and **16***b* is piled up through the gate insulation film **15**; a low-level impurity region **12***d* on which a lower layer **16***a* of the gate electrode is piled up through the gate insulation film **15**; and a low-level impurity region **12***c* on which the lower layer **16***a* of the gate electrode is not piled up. Here, the reference numeral **23** denotes a source electrode or a drain electrode, and **24** denotes a connecting electrode for making a connection between the first electrode **28***a* and the high-level impurity region **12***b*.

In FIG. **1**B, there is only illustrated the current-controlling TFT. In FIG. **2**, however, there is shown a cross sectional view that also illustrates a switching TFT **40** and a capacity **41** arranged on the pixel part **2**. In FIG. **2**, the switching TFT **40**, is exemplified as one using an n-channel TFT having a plurality of channel forming regions **50***a* on which a gate electrode **44** is piled up through the gate insulation film **15**. Here, the reference numerals **47** and **48** denote source wiring or drain wiring, **50***b* denotes a source region or a drain region, **50***c* denotes a low-level impurity region on which the gate electrode **44** is not piled up, and **50***d* denotes a low-level impurity region on which the gate electrode **44** is piled up. In the capacity **41**, interlayer insulation films **22**, **20** are provided as dielectric materials and a holding capacity is formed using an electrode **46** and an electrode **43**. In addition, the gate insulation film **15** is provided as a dielectric material and a holding capacity is also formed using the electrode **43** and a semiconductor film **42**. In FIG. **2**, the same structural components as those of FIGS. **1**A and **1**B are represented by the same reference numerals.

Furthermore, each of the interlayer insulation films **20**, **21**, **22** maybe, for example, a photosensitive or non-photosensitive organic material (such as polyimide, acrylate, polyamide, polyimide amide, resist, or benzocyclobutene); an inorganic material (such as silicon oxide, silicon nitride, or silicon oxynitride) coated with a sputtering method, a CVD method, or a coating method; or a laminate thereof. In FIGS. **1**A, **1**B and **2**, the inorganic insulation film **20** is made of a silicon nitride film and is formed over the gate electrode and the gate insulation film **15**. The inorganic insulation film **20** is formed so that hydrogen is introduced into the film, and is provided for hydrogenation in which a dangling bond of a semiconductor layer is provided as a termination by heat treatment. It is possible to hydrogenate a semiconductor located below regardless of the existence of the gate insulation film **15** constructed of a silicon oxide film. In addition, the interlayer insulation film **21** is formed by a coating of a photosensitive organic material, followed by subjecting to a selective etching with a wet etching or dry etching method such that the upper portion becomes a curved surface having a curvature radius. When an organic material is used as the interlayer insulation film **21**, water, gas, or impurities may be dispersed from the interlayer insulation film **21** to deteriorate a light emitting element to be formed later. For preventing such a disadvantage, it is preferable to coat the interlayer insulation film **21** with the interlayer insulation film **22** such as a silicon nitride film, an silicon oxynitride film, an oxidized aluminum nitride film, or a laminate thereof Furthermore, the interlayer insulation film **22** is capable of preventing the dispersion of impurities from the substrate **10** to a light emitting element or from the light emitting element to TFT. Furthermore, in the case of using an organic material having a hygroscopic property as the interlayer insulation film **21**, this film is swollen when it is exposed to a solution such as a releasing solution used in other patterning in the subsequent step. There is a need to bake again or to cover with the interlayer insulation film **22** to prevent the interlayer insulation film **21** from being swollen.

Furthermore, the present invention is not limited to the sequence of lamination of interlayer insulation films shown in FIGS. **1**A, **1**B and **2**, or the sequence of steps for film formation and hydrogenation thereof. Alternatively, for example as shown in FIG. **3**, an interlayer insulation film **221** for preventing the dispersion of impurities is formed on the interlayer insulation film for hydrogenation and is then hydrogenated, followed by the formation of a film with an organic resin material by a coating method. In this case, furthermore, the interlayer insulation film **222** having a curved surface having a curvature radius on its upper end portion may be formed by subjecting the film to wet etching

or dry etching. In the case of subjecting an organic resin film to dry etching, charges may be generated and thus there is the possibility of causing variations in TFT characteristics. Therefore, it is preferable to etch the film with wet etching. In the case of etching the interlayer insulation film made of a laminate of the inorganic insulation film and an organic resin film, the wet etching may be only performed on the organic resin film, or the wet etching may be performed after dry etching of the inorganic insulation film and forming an organic resin film.

In the case of using a photosensitive organic resin material as the interlayer insulation film **21**, the upper end portion thereof tends to become a curved surface having a curvature radius. On the other hand, in the case of using a non-photosensitive organic resin material or an inorganic material as the interlayer insulation film **222**, the configuration of the resulting film can be represented as shown in the cross sectional view of FIGS. **4**A and **4**B.

Furthermore, in the case of making a lower-side radiation type display, it is preferable to use a transparent material as each of the interlayer insulation films **20** to **21**.

Furthermore, insulating materials (also referred to as banks, partitions, barriers, embankments, or the like) **30** are formed on the both ends of the first electrode (anode) **28***a*, and a layer containing an organic compound (referred to as an EL layer) **31** is formed on the first electrode (anode) **28***a*. Before or after the formation of the EL layer **31**, it is preferable to perform deaeration by the application of heat in a vacuum. The layer containing the organic compound **31** is very thin, so that it is preferable to make the surface of the first electrode flat. For instance, before or after the patterning of the first electrode **28***a*, the film may be flattened by a chemical or mechanical grinding treatment (typically CMP technology or the like). In the case of performing the CMP, the electrode **24** or the insulating material **30** is provided as a thin film, and the end portion of the electrode **24** is tapered are desirable to improve the flatness of the first electrode. Because area the CMP not being performed decrease. For improving the cleanness of the surface of the first electrode, washing (brush washing and so on) for removing a foreign substance (dust or the like) may be performed. For the washing, the end portion of the electrode **24** may be tapered to prevent the foreign substance (dust or the like) from being remained at the end portion of the first electrode.

The insulating material **30** may be a photosensitive or non-photosensitive organic material (such as polyimide, acrylate, polyamide, polyimide amide, resist, or benzocyclobutene), an inorganic material (such as silicon oxide, silicon nitride, or silicon oxynitride) with a CVD method, a sputtering method, or coating method, or a laminate thereof. In the case of using the photosensitive organic material as the insulating material **30**, useful photosensitive organic materials may be roughly grouped into two types. That is, the one is a negative type which becomes insoluble to an etchant by photosensitive light irradiation and the other is a positive type which becomes soluble to the etchant by light irradiation. According to the present invention, both types can be appropriately used.

In the case of using a photosensitive organic material as the insulating material **30**, as shown in FIGS. **1**A, **1**B and **2**, it tends to become one having a curved surface with a curvature on its upper end portion. In the case of using a non-photosensitive organic material or inorganic material, the insulating material **330**, **430** becomes one having a cross section shown in FIGS. **4**A and **4**B

Furthermore, in the case of using an organic material as the insulating material **30** or each of interlayer insulation films **20** to **22**, it is important to deaerate the material by heat treatment in a vacuum to remove gas or water from the film. Therefore, it is preferable to form a layer **31** containing an organic compound after the deaeration.

On the layer **31** containing the organic compound, a second electrode (cathode) **32** to be provided as an upper electrode is formed. Consequently, a light emitting element comprised of the first electrode (anode) **28***a*, the layer **31** containing an organic compound, and the second electrode (cathode) **32** is formed. When the light emitting element is provided for white light emission, a coloring layer and a color filter (not shown in the figure for simplification) are mounted on the substrate **10**.

The second electrode **32** can be functioned as wiring common to all pixels and is electrically connected with FPC **6** through the wiring. In FIG. **2**, furthermore, there is shown a connecting region **7** for making an electrical connection between the second electrode **32** and the wiring **45**. The wiring **45** is extended to make an electrical connection with FPC **6**.

In addition, on the terminal portion shown in FIG. **1**B, a terminal electrode formed as a laminate of electrodes **19***a*, **19***b* formed by the same step as that of the gate electrode, an electrode formed by the same step as that of the source electrode or the drain electrode, and the electrode **28***b* formed on the same step as that of the first electrode **28***a* is stuck on the FPC **6** with an adhesive such as an electric conductive adhesive. Here, the configuration of the terminal portion is not limited to the structure shown in FIG. **1**B. It may be appropriately modified and formed.

In addition, for sealing the light emitting element formed on the substrate **10**, a sealed substrate **4** is laminated thereon using a sealing adhesive **5**. Furthermore, for obtaining an interval between the sealed substrate **4** and the limit-emitting element, a spacer made of a resin film may be obtained. Then, inert gas such as nitrogen is filled in an inner space of the sealing adhesive **5**. In addition, the seal adhesive **5** may be preferably made of an epoxy resin. Also, the sealing adhesive **5** may be preferably made of a material through which water and oxygen permeate as little as possible. Furthermore, the sealing adhesive **5** may contain a substance which exerts an effect of absorbing oxygen and water into the inside of the space.

In the present embodiment, the sealed substrate **4** may be formed of a material such as a glass substrate, a quartz substrate, or a plastic substrate made of fiberglass-reinforced plastics (FRP), polyvinyl fluoride (PVF), miler, polyester, acryl, or the like. In addition, after sticking the sealed substrate **4** using the sealing adhesive **5**, it is possible to make a sealing with the sealing adhesive **5** so as to cover the side surface (the exposed surface).

As described above, by sealing the light emitting element into the closed space, the light emitting element can be completely blocked from the outside, so that it becomes possible to prevent infiltration of a substance such as water or oxygen that accelerates the deterioration of the organic compound layer. Therefore, the light emitting device having high reliability can be obtained.

Furthermore, the present invention is not limited to the switching TFT structure of the pixel part shown in FIG. **2**. As shown in FIG. **5**A, for example, the LDD region **60***c* which is not piled up on the gate electrode may be only formed between the channel forming region **60***a* and the drain region (or the source region) **60***b* through the gate insulation film. Here, the shape of the gate electrode is not limited. Alternatively, as shown in FIG. **5**B, it may be formed as a single-layer gate electrode.

Additionally, the top-gate type TFT is described as an example in the above description. However,the present invention can be applied irrespective of the TFT structure. For instance, the present invention may be applied on a bottom gate type (invert staggered type) TFT or forward staggered type TFT.

In FIG. **1**B, furthermore, there is shown a structure in which the first electrode **28***a* is formed after the formation of a connecting electrode **24** to be connected to the source region or the drain region. According to the present invention, however, it is not specifically limited to such a structure. Alternatively, for example, the connecting electrode **624** to be connected to the source region or the drain region may be formed after forming the first electrode **628***a* as shown in FIG. **6**A.

In addition, as shown in FIG. **9**A, an electrode maybe prepared by providing an insulating material **30** as a mask and etching the mask. That is, an electrode may be formed such that it is comprised of a first electrode **1024***a*, and an electrode **1024***b* having a slant face that reflects light from a layer **1031** containing an organic compound. In FIG. **9**A, furthermore, for emitting light in the direction along the arrow shown in the figure, a second electrode **1032** is provided as a thin metal film, a transparent conductive film, or a laminate thereof.

Furthermore, as shown in FIG. **15**A, a first electrode **1428***a* may be formed on an interlayer insulation film **1431** after forming the interlayer insulation film **1431** that covers an electrode **1424** in contact with the source region or the drain region.

Furthermore, as shown in FIG. **16**, wiring **1525** to **1527** may be formed on the interlayer insulation film **20** and then wiring of the drive circuit may be extended or brought into contact with other components. In addition, an electrode may be comprised of a first electrode **1524***a* and an electrode **1524***b*, which is fabricated to have a slant surface in an end portion, that reflects light from a layer **1531** containing an organic compound an interlayer insulation film **1521** coated over the wiring. In FIG. **16**A, there is shown a structure (upper-side radiation type) which takes out the emitted light in the direction along the arrow shown in the figure.

Here, the invention constructed as described above will be described in more detail with reference to the following examples.

EXAMPLE 1

Here, a method of simultaneously manufacturing a pixel portion, and TFTs (n-channel TFTs and a p-channel TFT) of a driving circuit provided in the periphery of the pixel portion on the same substrate to manufacture the light emitting device having EL element is described in detail using FIGS. **1**B and **2**.

For a lower layer of a base insulating film **11**, a silicon oxynitride film formed from SiH_4, NH_3, and N_2O as material gases (composition ratio: Si=32%, O=27%, N=24%, H=17%) is formed on the heat resistance glass substrate (the first substrate **10**) having a thickness of 0.7 mm with a thickness of 50 nm (preferably 10 to 200 nm) and at a film deposition temperature of 400° C. by using plasma CVD. Then, after the surface is cleaned with ozone water, an oxide film on the surface is removed by means of dilute hydrofluoric acid (dilution with 1/100). Next, for an upper layer of the base insulating film **11**, a silicon hydride oxynitride film formed from SiH_4 and N_2O as material gases (composition ratio: Si=32%, O=59%, N=7%, H=2%) is formed thereon with a thickness of 100 nm (preferably 50 to 200 nm) and at a film deposition temperature of 400° C. by using plasma CVD to thereby form a lamination. Further, without exposure to an atmosphere, a semiconductor film having an amorphous configuration (in this case, amorphous silicon film) is formed to have a thickness of 54 nm (preferably 25 to 80 nm) with SiH_4 as a film deposition gas and at a film deposition temperature of 300° C. by using plasma CVD.

In this example, the base insulating film **11** is shown in a form of a two-layer configuration, but a single layer of the insulating film or a configuration in which two or more layers thereof are laminated may be adopted. Further, there is no limitation on the material of the semiconductor film. However, the semiconductor film may be preferably formed of silicon or silicon germanium ($Si_{1-x}Ge_x$ (X=0.0001 to 0.02)) alloy by using a known means (sputtering, LPCVD, plasma CVD, or the like). Further, a plasma CVD apparatus may be a single wafer type or a batch type. In addition, the base insulating film and the semiconductor film may be continuously formed in the same film formation chamber without exposure to an atmosphere.

Subsequently, after the surface of the semiconductor film having an amorphous configuration is cleaned, an extremely thin oxide film with a thickness of about 2 nm is formed from ozone water on the surface. Then, in order to control a threshold voltage of a TFT, doping of a minute amount of impurity element (boron or phosphorous) is performed. Here, an ion doping method is used in which diborane (B_2H_6) is plasma-excited without mass-separation, and boron is added to the amorphous silicon film under the doping conditions: an acceleration voltage of 15 kV; a gas flow rate of diborane diluted to 1% with hydrogen of 30 sccm; and a dosage of 2×10^{12} atoms/cm^2.

Then, a nickel acetate salt solution containing nickel of 10 ppm in weight is applied using a spinner. Instead of the application, a method of spraying nickel elements to the entire surface by sputtering may also be used.

Then, heat treatment is conducted to perform crystallization, thereby forming a semiconductor film having a crystalline configuration. A heating process using an electric furnace or irradiation of strong light may be conducted for this heat treatment. In case of the heating process using an electric furnace, it may be conducted at 500 to 650° C. for 4 to 24 hours. Here, after the heating process (500° C. for 1 hour) for dehydrogenation is conducted, the heating process (550° C. for 4 hours) for crystallization is conducted, thereby obtaining a silicon film having a crystalline configuration. Note that, although crystallization is performed by using the heating process using a furnace, crystallization may be performed by means of a lamp annealing apparatus. Also note that, although a crystallization technique using nickel as a metal element that promotes crystallization of silicon is used here, other known crystallization techniques, for example, a solid-phase growth method and a laser crystallization method, may be used.

Next, after the oxide film on the surface of the silicon film having a crystalline configuration is removed by dilute hydrofluoric acid or the like, irradiation of first laser light (XeCl: wavelength of 308 nm) for raising a crystallization rate and repairing defects remaining in crystal grains is performed in an atmosphere or in an oxygen atmosphere. Excimer laser light with a wavelength of 400 nm or less, or second harmonic wave or third harmonic wave of a YAG laser is used for the laser light. In any case, pulse laser light with a repetition frequency of approximately 10 to 1000 Hz is used, the pulse laser light is condensed to 100 to 500 mJ/cm^2 by an optical system, and irradiation is performed with an overlap ratio of 90 to 95%, whereby the silicon film

surface may be scanned. Here, the irradiation of the first laser light is performed in an atmosphere with a repetition frequency of 30 Hz and energy density of 470 mJ/cm^2. Note that an oxide film is formed on the surface by the first laser light irradiation since the irradiation is conducted in an atmosphere or in an oxygen atmosphere. Though an example of using the pulse laser is shown here, the continuous oscillation laser may also be used. When a crystallization of an amorphous semiconductor film is conducted, it is preferable that the second harmonic through the fourth harmonic of basic waves is applied by using the solid state laser which is capable of continuous oscillation in order to obtain a crystal in large grain size. Typically, it is preferable that the second harmonic (with a thickness of 532 nm) or the third harmonic (with a thickness of 355 nm) of an Nd:YVO_4 laser (basic wave of 1064 nm) is applied. Specifically, laser beams emitted from the continuous oscillation type YVO_4 laser with 10 W output is converted into a harmonic by using the non-linear optical elements. Also, a method of emitting a harmonic by applying crystal of YVO_4 and the non-linear optical elements into aresonator. Then, more preferably, the laser beams are formed so as to have a rectangular shape or an elliptical shape by an optical system, thereby irradiating a substance to be treated. At this time, the energy density of approximately 0.01 to 100 MW/cm^2 (preferably 01. to 10 MW/cm^2) is required. The semiconductor film is moved at approximately 10 to 2000 cm/s rate relatively corresponding to the laser beams so as to irradiate the semiconductor film.

Though the technique of irradiating laser light is conducted after heat treatment using nickel as a metal element for promoting the crystallization is performed here, crystallization of an amorphous silicon film may be performed by using continuous oscillation laser (the second harmonics of YVO_4 laser) without doping nickel.

The oxide film formed by this laser light irradiation and an oxide film formed by treating the surface with ozone water for 120 seconds together make a barrier layer that has a thickness of 1 to 5 nm in total. Though the barrier layer is formed by using ozone water here, another method such as ultraviolet light irradiation performing in an oxygen atmosphere or oxide plasma treatment to oxidize the surface of the semiconductor film having the crystalline configuration may be used. In addition, as another method for forming the barrier layer, an oxide film having a thickness of about 1 nm to 10 nm may be deposited by a plasma CVD method, a sputtering method, an evaporation method, or the like. In this specification, the term barrier layer refers to a layer which has a film quality or film thickness that allows a metal element to pass in the gettering step and which functions as an etching stopper in the step of removing the layer that functions as a gettering site.

On the barrier layer, an amorphous silicon film containing argon elements are formed to a thickness of 50 to 400 nm, in this example, 150 nm by sputtering to serve as a gettering site. Film formation conditions by sputtering in this example include setting the film formation pressure to 0.3 Pa, the gas (Ar) flow rate to 50 sccm, the film formation power to 3 kW, and the substrate temperature to 150° C. The amorphous silicon film that is formed under the above conditions contains argon elements in an atomic concentration of 3×10^{20} to 6×10^{20} atoms/cm^3, and contains oxygen in an atomic concentration of 1×10^{19} to 3×10^{19} atoms/cm^3. Thereafter, an electric furnace is used in heat treatment at 550° C. for 4 hours for gettering to reduce the nickel concentration in the semiconductor film having a crystalline configuration. In addition, a lamp annealing apparatus may be used for the gettering instead of the electric furnace.

Subsequently, the amorphous silicon film containing the argon element, which is the gettering site, is selectively removed with the barrier layer as an etching stopper, and then, the barrier layer is selectively removed by dilute hydrofluoric acid. Note that there is a tendency that nickel is likely to move to a region with a high oxygen concentration in gettering, and thus, it is desirable that the barrier layer comprised of the oxide film is removed after gettering.

Then, after a thin oxide film is formed from ozone water on the surface of the obtained silicon film having a crystalline configuration (also referred to as polysilicon film), a mask made of resist is formed, and an etching process is conducted thereto to obtain a desired shape, thereby forming the island-like semiconductor layers separated from one another. After the formation of the semiconductor layers, the mask made of resist is removed.

Then, the oxide film is removed with the etchant containing hydrofluoric acid, and at the same time, the surface of the silicon film is cleaned. Thereafter, an insulating film containing silicon as its main constituent, which becomes a gate insulating film **15**, is formed. In this example, a silicon oxynitride film (composition ratio: Si=32%, O=59%, N=7%, H=2%) is formed with a thickness of 115 nm by plasma CVD.

Next, on the gate insulating film **15**, a first conductive film with a thickness of 20 to 100 nm and a second conductive film with a thickness of 100 to 400 nm are formed in lamination. In this example, a 50 nm thick tantalum nitride film and a 370 nm thick tungsten film are sequentially laminated on the gate insulating film **15**, and pattering is performed thereon to form each gate electrode and each line in the sequence hereafter described.

As a conductive material for forming the first conductive film and the second conductive film, an element selected from the group consisting of Ta, W, Ti, Mo, Al and Cu, or an alloy material or compound material containing the above element as its main constituent is employed. Further, a semiconductor film typified by a polycrystalline silicon film doped with an impurity element such as phosphorous, or an AgPdCu alloy may be used as the first conductive film and the second conductive film. Further, the present invention is not limited to a two-layer configuration. For example, a three-layer configuration may be adopted in which a 50 nm thick tungsten film, an alloy film of aluminum and silicon (Al—Si) with a thickness of 500 nm, and a 30 nm thick titanium nitride film are sequentially laminated. Moreover, in case of a three-layer configuration, tungsten nitride may be used in place of tungsten of the first conductive film, an alloy film of aluminum and titanium (Al—Ti) may be used in place of the alloy film of aluminum and silicon (Al—Si) of the second conductive film, and a titanium film may be used in place of the titanium nitride film of the third conductive film. In addition, a single layer configuration may also be adopted.

An ICP (inductively coupled plasma) etching method may be preferably used for the etching process of the above-mentioned first and second conductive films (the first and second etching processes). The ICP etching method is used, and the etching conditions (an electric energy applied to a coil-shape electrode, an electric energy applied to an electrode on a substrate side, a temperature of the electrode on the substrate side, and the like) are appropriately adjusted, whereby a conductive film can be etched to have a desired taper shape. For etching gases, a suitable one can be chosen from chlorine-based gas, typically, Cl_2, BCl_3, $SiCl_4$, or CCl_4, fluorine-based gas, typically, CF_4, SF_6, or NF_3, and O_2.

In this example, after the resist mask is formed, RF (13.56 MHz) power of 700 W is applied to the coil-shape electrode with a pressure of 1 Pa as a first etching condition, and CF_4, SF_6, and NF_3, and O_2 can be appropriately used as etching gases. Each flow rate of gasses is set to 25/25/10 (sccm), and RF (13.56 MHz) power of 150 W is applied also to the substrate (sample stage) to substantially apply a negative self-bias voltage. Note that, size of the electrode area on the substrate side is 12.5 cm×12.5 cm, and coil-shape electrode (a quartz disc comprising a coil is used here) has 25 cm in diameter. With the first etching conditions, a W film is etched to form an end portion of the first conductive layer into a tapered shape. The angle of this taper portion is from 15° to 45°. Thereafter, the resist mask is removed and the second etching condition is adopted. CF_4 and Cl_2 are used as etching gases, the flow rate of the gases is set to 30/30 sccm, and RF (13.56 MHz) power of 500 W is applied to a coil-shape electrode with a pressure of 1 Pa to generate plasma, thereby performing etching for about 30 seconds. RF (13.56 MHz) power of 20 W is also applied to the substrate side (sample stage) to substantially apply a negative self-bias voltage. Under the second etching conditions in which CF_4 and Cl_2 are mixed, both the W film and the TaN film are etched at the same level. Here, the first etching condition and the second etching condition are referred to as the first etching treatment.

Further, in the case where the three-layer configuration is adopted in which a 50 nm thick tungsten film, an alloy film of aluminum and silicon (Al—Si) with a thickness of 500 nm, and a 30 nm thick titanium nitride film are sequentially laminated, under the first etching conditions of the first etching process in which: BCl_3, Cl_2 and O_2 are used as material gases; the flow rate of the gases is set to 65/10/5 (sccm); and RF (13.56 MHz) power of 450 W is applied to a coil-shape electrode with a pressure of 1.2 Pa to generate plasma, etching is performed for 117 seconds. As to the second etching conditions of the first etching process, CF_4, Cl_2 and O_2 are used as etching gases, the flow rate of the gases is set to 25/25/10 sccm, and RF (13.56 MHz) power of 500 W is applied to a coil-shape electrode with a pressure of 1 Pa to generate plasma. With the above conditions, it is sufficient that etching is performed for about 30 seconds.

After that, without removing the resist mask, a first doping treatment is conducted to dope the entire surface using gate electrodes as masks. The first doping treatment employs ion doping or ion implantation. As an impurity element imparting n-type conductivity, phosphorus (P) or arsenic (As) is typically used. First impurity regions (n+ region) **13***b* and **50***b* are formed in a self aligning manner. An n-type doping impurity element in the density range of 1×10^{20} to 1×10^{21} atoms/cm^3 are added to the first impurity regions.

Subsequently, a second etching treatment is performed without removing the resist mask. Here, CF_4 and Cl_2 are used as etching gases, the flow rate of the gases is set to 30/30 sccm, and RF (13.56 MHz) power of 500 W is applied to a coil-shape electrode with a pressure of 1 Pa to generate plasma, thereby performing etching for about 60 seconds. RF (13.56 MHz) power of 20 W is also applied to the substrate side (sample stage) to substantially apply a negative self-bias voltage. Thereafter, etching treatment is performed without removing the resist mask under a fourth conditions in which CF_4, Cl_2, and O_2 are used as etching gases, the flow rate of the gases is set to 20/20/20 sccm, and RF (13.56 MHz) power of 500 W is applied to a coil-shape electrode with a pressure of 1 Pa to generate plasma, thereby performing etching for about 20 seconds. RF (13.56 MHz) power of 20 W is also applied to the substrate side (sample stage) to substantially apply a negative self-bias voltage. Here, the third etching conditions and the fourth etching conditions are referred to as a second etching treatment. Anisotropic etching is conducted on a W film and a Tan film with the second etching treatment. By adding oxygen into the etching gas, a different of the etching speed between the W film and Tan film is made. Although there is no illustration, a gate insulating film not being covered by the first conductive layer is etched more and becomes thinner. At this stage, the gate electrode and electrodes **16** and **17** to **18** composed of the first conductive layer **16***a* as a lower layer and the second conductive layer **16***b* as an upper layer are formed.

After that, without removing the resist mask, a second doping treatment is conducted to dope the entire surface using gate electrodes as masks. Impurity regions (n^- region) overlapping with a part of the gate electrodes **12***c*, **13***c*, **14***c* and **50***c*, and impurity regions not over lapping with the gate electrodes **12***d*, **13***d*, **14***d* and **50***d* are formed. The second doping treatment employs ion doping or ion implantation. In this example, the ion doping method is performed under a condition in a gas flow rate of phosphine (PH_3) diluted to 5% with hydrogen of 30 sccm, and the dose of 1.5×10^{13} atoms/cm^2 and the accelerating voltage of 90 kV. The resist mask and the second conductive film function as mask for the n-type doping impurity element, and the second impurity region **12***d*, **13***d*, **14***d* and **50***d* is formed. An n-type doping impurity element in the density range of 1×10^{16} to 1×10^{17} atoms/cm^3 are added to the impurity regions **13***d* and **14***d*. In this example, the region of same concentration range as the second impurity regions **13***d* and **14***d* is referred to as n^- region.

After the resist mask is removed, a new resist mask is formed to perform a third doping treatment. By the third doping treatment, third impurity regions, fourth impurity regions and fifth impurity regions are formed that is a semiconductor layer forming the semiconductor layer forming the p-channel type TFT in which p-type doping impurity element (boron and the like) is added.

A p-type doping impurity element in the density range of 1×10^{20} to 1×10^{21} atoms/cm^3 are added to the third impurity regions **12***b*, **14***b*. Note that, in the third impurity regions, phosphorous (P) has been added in the preceding step (n^{--} region), but the p-type doping impurity element is added at a density that is over 10 times as high as that of phosphorous. Thus, the third impurity regions have a p-type conductivity. In this example, the region of same density range as the third impurity region is referred to as p^+ region.

The fourth impurity regions **12***c* and **14***c* are formed at regions not overlapping with the taper portion of the second conductive layer, and added with the p-type impurity element in the density range of 1×10^{18} to 1×10^{20} atoms/cm^3. Here, a region (n^- region) added with phosphorous (P) in the preceding step and having same density range with the fourth impurity region is referred to as p^- region. Further, a region (n^{--} region) added with phosphorous (P) in the preceding step and the fifth impurity regions **12***d*, **14***d* overlapping with the taper portion of the second conductive layer is referred to as p^{--} region.

Though the above-described steps, the impurity regions having n-type or p-type doping impurity element are formed in the respective semiconductor layers.

And, removing the resist mask, performing the cleaning, then, a step of activating the impurity element added to the respective semiconductor layers is conducted. In this activation step, a laser annealing method, a rapid thermal

annealing (RTA) method using a lamp light source, a method of irradiating light emitted from a YAG laser or excimer laser from the back surface, heat treatment using a furnace, or a combination thereof is employed.

Next, an interlayer insulating film **20** that covers substantially the entire surface is formed. In this example, a 50 nm thick silicon oxynitride film is formed by plasma CVD. Of course, the interlayer insulating film **20** is not limited to the silicon oxynitride film, and other insulating films containing silicon may be used in a single layer or a lamination configuration. Here, the film formation is performed with a condition of containing hydrogen in the interlayer insulating film. Next, heat treatment (300 to 550° C. for 1 to 12 hours) is performed, thereby conducting a step of hydrogenating the semiconductor layers. This step is a step of terminating dangling bonds of the semiconductor layers by hydrogen contained in the interlayer insulating film **20**. The semiconductor layers can be hydrogenated irrespective of the existence of an insulating film (not shown) formed of a silicon oxide film. As another means for hydrogenation, plasma hydrogenation (using hydrogen excited by plasma) may be conducted.

Next, an interlayer insulating film is formed from an organic insulating material on the interlayer insulating film **20**. In this example, a positive type photosensitive acrylic resin film with a thickness of 1.6 μm is formed by a coating method to become an interlayer insulating film **21** having a curved surface on the upper end portion of a contact hole. Further, an interlayer insulating film **22** made of a silicon nitride film with a thickness of 20 to 50 nm is laminated thereon by using sputtering that uses a RF power source. In particular, the silicon nitride film formed by the sputtering using silicon target and the RF power source in a nitrogen atmosphere is desirable because of its density, capability of blocking moisture and oxygen as a matter of course, and as well as capability of sufficiently blocking metal elements which easily diffuse such as Li and the like with a film thickness level of 20 nm. The interlayer insulating film **22** is of multilayer, can be a laminate configuration, for example, of an oxynitride aluminum film with a thickness of 20 nm to 50 nm and a silicon nitride film with a thickness of 20 to 50 nm. Note that, although an example of a silicon nitride film being laminated on an acrylic resin film is shown here, it is not limited thereto particularly. The total thickness of the organic insulating film and the inorganic insulating film may be set to 0.5 to 2.0 μm.

Subsequently, a contact hole extending to each of the impurity regions is formed by removing the gate insulating film **15** and interlayer insulating films **20** and **22**. In addition, the sequence of forming the interlayer insulating films **20**, **21**, **22**, the contact hole, and the hydrogenation are not formed particularly limited.

Thereafter, electrodes **23** to **27**, **46** to **48** are formed by using Al, Ti, Mo, W and the like. Specifically, a source wiring, a power source supply line, an extraction electrode, a capacity wiring and a connection electrode are formed. As the material of the electrodes and the wirings, a lamination film having Al including silicon film (350 nm thickness), Ti film (100 nm thickness), and Ti film (50 nm thickness) is used. And patterning is performed. Thus, the source electrode, the source wiring, the connection electrode, the extraction electrode, and the power source supply line are formed appropriately. Further, the extraction electrode for contacting with the gate wiring overlapped with the interlayer insulating film is provided in the edge portion of the gate wiring. The input-output terminal portion in which the plural electrodes for connecting with an external circuit and an external power source is provided are formed in other edge portions of each wiring.

And, a first electrode **28***a* is formed to connect and overlap with the connection electrode **24** which connects with a drain region **12***b* of the TFT made of a p-channel TFT for current controlling. In this example, the first electrode **28***a* functions as an anode of the EL element, and since the EL element emits light through the first electrode **28***a*, it may be a transparent conductive film (ITO (indium tin oxide alloy), indium oxide-zinc oxide alloy (In_2O_3—ZnO), zinc oxide(ZnO) and the like), which are being with a big work function. For example, when the ITO is used as the first electrode, hydrogen gas or moisture vapor is taken into the atmosphere by sputtering to obtain an ITO film in the atmosphere state, and heat treatment at a temperature from 200° C. to 225° C. is performed thereon thereafter.

In addition, for flattening the surface of the first electrode **28***a*, any flattening processing such as CMP may be performed after the formation of the first electrode **28***a* or after the formation of an insulting material **30**. In the case of performing the CMP processing after the formation of the insulating material **30**, it is preferable to form an interlayer insulation film **22** to increase the adhesiveness between the insulating material **30** and the interlayer insulation film **21**.

As described above, a source driving circuit **1** having an n-channel TFT **8**, a p-channel TFT **9**, and a CMOS circuit that complementally combines the n-channel TFT **8** and p-channel TFT **9**, and a pixel portion **2** provided the plural n-channel TFTs **40** or the plural p-channel TFTs in one pixel are formed.

Then, the insulating material **30** called bank is formed on the both ends of the first electrode **28***a* to cover the ends thereof. The bank **30** may be formed by an organic resin film or an insulating film including silicon. Here, as the insulating material **30**, a positive type photosensitive acrylic resin film is used to form a bank with a shape shown in FIG. **1**B.

Next, an EL layer **31** and a second electrode **32** (cathode of the EL element) are formed on the first electrode **28***a* whose ends are covered with the banks **30**.

The EL layer **31** (a layer for light emission and for moving of carriers to cause light emission) is formed by freely combining a light emitting layer, electric charge transporting layers and electric charge injection layers. For example, a monomeric organic EL material or a polymeric organic EL material is used to form an EL layer. An EL layer may be a thin film formed of a light emitting material that emits light by singlet excitation (fluorescence) (a singlet compound) or a thin film formed of a light emitting material that emits light by triplet excitation (phosphorescence) (a triplet compound). Inorganic materials such as silicon carbide may be used for the electric charge transporting layer and electric charge injection layers. Known organic EL materials and inorganic materials can be employed.

It is said that the preferred material of a cathode **32** is a metal having a small work function (typically, a metal element belonging to Group 1 or 2 in the periodic table) or alloy of such metal. The light emission efficiency is improved as the work function becomes smaller. Therefore, an alloy material containing Li (lithium) that is one of alkali metals is particularly desirable as the cathode material. The cathode also functions as a wiring common to all pixels and is connected to terminal electrodes **19***a*, **19***b*, **28***b* with an input terminal portion through a connection wiring.

Next, the EL having at least a cathode, an organic compound layer, and an anode is preferably sealed by an organic resin, a protective film (not shown), a sealing substrate, or a sealing can to cut the EL element completely off from the

outside and prevent permeation of external substances, such as moisture and oxygen, that accelerate degradation due to oxidization of the EL layer. However, it is not necessary to provide the protective film or the like in the input-output terminal portions to which an FPC needs to be connected later. Alternatively, if necessary, a desiccant may be set for removing moisture in the sealed interspace.

An FPC **6** (flexible printed circuit) is attached to the electrode **28***b* of the input-output terminal portions using an anisotropic conductive material. Note that the electrode **28***b* is formed at the same time with the first electrode **28***a*. The anisotropic conductive material is composed of a resin and conductive particles several tens to several hundreds μm in diameter whose surfaces are plated by Au or the like. The conductive particles electrically connect the electrodes of the input-output terminal portions with wirings formed in the FPC.

If necessary, an optical film such as a circularly polarizing plate composed of a color changing layer, a color filter, a polarizing plate and a phase difference plate may be provided and an IC chip may be mounted.

According to the preceding steps, a module type light emitting device connected with FPC is completed (FIG. **1**A).

Furthermore, the present invention is not limited to the TFT structures shown in FIGS. **1**A, **1**B and **2**, although one more mask here is increased to the total number of the masks for the TFT shown in FIGS. **1**A, **1**B and **2**, as shown in FIG. **5**A, alternatively, it may be designed such that a switching TFT **70** of the pixel part has no impurity region piled on the gate electrode to further reduce the OFF current of the TFT.

A Manufacturing method for a TFT shown in FIG. **5**A will be described hereafter. For simplification, only points different from the method for obtaining the cross sectional structure shown in FIG. **1**B and FIG. **2** (the sequence of etching conditions of gate electrodes and doping) will be described here. Here, in FIG. **5**A, the same structural components as those of FIGS. **1**A, **1**B and **2** are represented by the same reference numerals.

First, in accordance with the manufacturing method of FIG. **1**B, a first conductive film (TaN film) and a second conductive film (W film) are formed on a gate insulating film **15**. And, after a resist mask is formed, RF (13.56 MHz) power of 700 W is applied to the coil-shape electrode with a pressure of 1 Pa as a first etching condition, and CF_4, SF_6, and NF_3, and O_2 can be appropriately used as etching gases. Each flow rate of gasses is set to 25/25/10 (sccm), and RF (13.56 MHz) power of 150 W is applied also to the substrate (sample stage) to substantially apply a negative self-bias voltage. Thereafter, the resist mask is removed and a second etching condition is adopted. CF_4 and Cl_2 are used as etching gases, the flow rate of the gases is set to 30/30 sccm, and RF (13.56 MHz) power of 500 W is applied to a coil-shape electrode with a pressure of 1 Pa to generate plasma, thereby performing etching for about 30 seconds. RF (13.56 Mhz) power of 20 W is also applied to the substrate side (sample stage) to substantially apply a negative self-bias voltage. Under the second etching conditions in which CF_4 and Cl_2 are mixed, both the W film and the TaN film are etched at the same level. Here, the first etching conditions and the second etching conditions are referred to as a first etching treatment.

Then a second etching treatment is performed without removing the resist mask. Here, CF_4 and Cl_2 are used as etching gases, the flow rate of the gases is set to 30/30 sccm, and RF (13.56 Mhz) power of 500 W is applied to a coil-shape electrode with a pressure of 1 Pa to generate plasma, thereby performing etching for about 60 seconds. RF (13.56 Mhz) power of 20 W is also applied to the substrate side (sample stage) to substantially apply a negative self-bias voltage. Thereafter, etching treatment is performed without removing the resist mask under fourth conditions in which CF_4, Cl_2, and O_2 are used as etching gases, the flow rate of the gases is set to 20/20/20 sccm, and RF (13.56 Mhz) power of 500 W is applied to a coil-shape electrode with a pressure of 1 Pa to generate plasma, thereby performing etching for about 20 seconds. RF (13.56 Mhz) power of 20 W is also applied to the substrate side (sample stage) to substantially apply a negative self-bias voltage. Here, the third etching conditions and the fourth etching conditions are referred to as the second etching treatment. At this stage, the gate electrode and electrodes **64** and **63** composed of the first conductive layer **66***a* as a lower layer and a second conductive layer **66***b* as an upper layer are formed. Since the etching conditions are different from that of FIG. **1**B, practically, the gate electrodes are different slightly.

After removing the resist masks, a first doping treatment is conducted to dope using gate electrodes **304** to **307** as masks to the entire surface. In ion doping, the dose is set to 1.5×10^{14} atoms/cm^2 and the acceleration voltage is set to 60 to 100 kV. Typically, phosphorus (P) or arsenic (As) is used as an impurity element that gives the n-type conductivity. An impurity region (n^{--} region) **60***c* is formed in a self aligning manner.

Subsequently, new resist masks are formed. In order to lower the OFF current value of the TFT **70**, the masks are formed to cover a channel formation region **60***a* or the portion of the semiconductor layer for forming the switching TFT of the pixel portion. The masks are formed to protect the channel formation region or the portion of the semiconductor layer for forming the p-channel TFT (not shown) of the driving circuit. In addition, masks are formed to cover the channel formation region **62***a* of the semiconductor layer for forming the current control TFT of the pixel portion or the periphery portion thereof.

Next, an impurity region (n^- region) overlapping with a part of the gate electrode of the n-channel TFT (not shown) of the driving circuit by performing selectively the second doping treatment using resist masks. The second doping processing may be performed by the ion-doping method or the ion-implanting method. In this example, the ion doping method is performed under a condition in a gas flow rate of phosphine (PH_3) diluted to 5% with hydrogen of 30 sccm, and the dose of 1.5×10^{13} atoms/cm^2 and the accelerating voltage of 90 kV. The resist mask and the second conductive film function as mask for the n-type doping impurity element, and the second impurity regions are formed. An n-type doping impurity element in the density range of 1×10^{16} to 1×10^{17} atoms/cm^3 are added to the impurity regions.

A third doping processing is performed without removing the masks made of resist. The third doping processing may be performed by the ion-doping method or the ion-implanting method. As the n-type doping impurity element may be typically used phosphorus (P) or arsenic (As). In this example, the ion doping method is performed under a condition inagas flow rate of phosphine (PH_3) diluted to 5% with hydrogen of 40 sccm, the dose of 2×10^{13} atoms/cm^2, and the accelerating voltage of 80 kV. In this case, the resist mask, the first conductive layer, and the second conductive layer function as masks for the n-type doping impurity element and the impurity region **60***b* is formed. An n-type doping impurity element in the density range of 1×10^{20} to 1×10^{21} atoms/cm^3 are added to the impurity region **60***b*.

As described above, in the manufacturing processes shown in FIG. **1**B, although the p-channel TFT was also

added with high-level n-type impurity elements, but by selectively performing doping with one more mask has been increased, the manufacturing processes in FIG. **5**A can be performed without being added with the same.

After the resist mask is removed, the mask made from resist is formed to perform the fourth doping treatment. By the fourth doping treatment, the fourth impurity regions **62***c*, **62***d* and the impurity region **62***b* are formed that is the semiconductor layer forming the semiconductor layer forming the p-channel type TFT in which p-type doping impurity element is added.

A p-type doping impurity element in the density range of 1×10^{20} to 1×10^{21} atoms/cm^3 are added to the fourth impurity region **62***b*. Note that, in the impurity regions **62***b*, **62***c*, phosphorous (P) has been added in the preceding step (n^{--} region), but the p-type doping impurity element is added at a density that is over 10 times as high as that of phosphorous. Thus, the impurity regions **62***b*, **62***c* have the p-type conductivity.

The impurity regions **62***c*, **62***d* are formed to overlap with the taper portion of the second conductive layer, and added with the p-type impurity element in the density range of 1×10^{18} to 1×10^{20} atoms/cm^3.

Though the above-described steps, the impurity regions with n-type conductivity **60** to **60***c* and impurity regions with p-type conductivity are formed in the respective semiconductor layers.

The subsequent manufacturing steps are same as ones shown in FIG. **1**B and FIG. **2**, the description thereof is thus omitted here.

Furthermore, the gate electrode may be provided as a single layer, or may have a TFT structure with which further miniaturization for the gate electrode is easy to realize such as one shown in FIG. **5**B. In the case of obtaining the structure shown in FIG. **5**B, each of low-level impurity regions **12***c*, **13***c*, **14***c* is appropriately formed by doping with impurity element which provides n-type or p-type conductivity using a mask made of resist before the formation of the gate electrode, gate electrodes **516** to **518**, and an electrode **519** are formed, followed by forming high-level impurity regions **13***b*, **14***b*, **12***b* by self-aligning or doping using a mask made of resist. In FIG. **5**B, the same structural components as those of FIG. **1**B are represented by the same reference numerals.

Further, as shown in FIG. **3**, an interlayer insulation film **222** made of an organic resin may be formed after forming an interlayer insulation film **221** made of an inorganic insulation film on an interlayer insulation film **20**. In the configuration shown in FIG. **3**, contact holes are formed by mere one mask, and thereby the total number of masks is reduced. Here, the interlayer insulation film **20** is prepared as an silicon oxynitride film having a film thickness of 50 nm by a plasma CVD method, followed by laminating an interlayer insulation film **221** made of a silicon nitride film of 20 to 50 nm in thickness by a sputtering method using a RF power supply. After that, the step of hydrogenating a semiconductor layer is performed by a heat treatment at a temperature of 300 to 550° C. for 1 to 12 hours. Subsequently, a contact hole extending to each of impurity regions is formed by removing the gate insulting film **15**, the interlayer insulation films **20**, **221**, followed by forming an interlayer insulation film **222** made of a photosensitive organic insulating material. A positive type photosensitive acrylic resin film may be formed by a coating method and may be provided as an interlayer insulation film **221** having a curved surface on its upper end portion.

Furthermore, the sequence of forming these interlayer insulation films **20**, **221**, **222** and the contact hole, and the hydrogenation are not particularly limited. Alternatively, for example, the hydrogenation may be performed after forming the interlayer insulation film **20**, followed by forming the interlayer insulation film **221**. Here, in FIG. **3**, the same structural components as those of FIG. **1**B are represented by the same reference numerals.

In addition, the present example may be optionally combined with Embodiment without limitation.

EXAMPLE 2

In Example 1, there was described an example in which the interlayer insulation film having the curved surface on its upper end portion and the insulating material were formed. In this example, another example which is different from Example 1 is shown in FIGS. **4**A and **4**B. In FIGS. **4**A and FIG. **4**B, the same structural components as those of FIG. **1**B are represented by the same reference numerals.

In the present example, there is shown an example in which, after the formation of an interlayer insulation film, a contact hole is formed by etching using the same mask.

At first, according to Example 1, the process proceeds up to the formation of an interlayer insulation film **20**, followed by hydrogenation. After that, as shown in FIG. **4**A, an interlayer insulation film **321** is formed using an organic material such as polyimide, acrylate, polyamide, polyimide amide, resist, or benzocyclobutene or an inorganic material such as silicon oxide, silicon nitride, or silicon oxynitride by a coating method. Furthermore, an interlayer insulation film **322** made of an inorganic material is formed using a sputtering method. Here, a non-photosensitive acryl resin is used as a material of the interlayer insulation film **321** and a silicon nitride film is used as a material of the interlayer insulation film **322**. Then, forming a mask made of resist, dry etching is performed at a time or in stages to form a contact hole extending to each impurity region. Subsequently, wiring or electrodes **323** to **327** are formed. Furthermore, as in the case of Example 1, a first electrode **28***a* is formed such that a part thereof is piled up and brought into contact with an electrode **324**. Then, an insulating material **330** is formed such that it covers the end portion of the first electrode **28***a*. Here, a non-photosensitive acryl resin is used as an insulating material **330**. In the subsequent steps, an EL layer **31**, a second electrode **32**, and so on are formed according to Example 1, resulting in a light emitting device having the cross sectional structure shown in FIG. **4**A.

Furthermore, the present example can be combined with Example 1. In this example, the non-photosensitive organic resin material is used as each of the interlayer insulation film **321** and the insulating material **330**. However, two or more combinations can be considered. For instance, the interlayer insulation film **321** may be formed using a non-photosensitive organic resin material, while the insulating material **330** may be provided as a structure using a photosensitive organic resin material.

Furthermore, as shown in FIG. **4**B, an interlayer insulation film **421** made of an inorganic material is formed on the interlayer insulation film **20** to form a contact hole extending to each impurity region. After that, an interlayer insulation film **422** is formed using an organic material such as polyimide, acrylate, polyamide, polyimide amide, resist, or benzocyclobutene or an inorganic material such as silicon oxide, silicon nitride, or silicon oxynitride by a coating method. Then, etching may be performed to form a contact hole. Furthermore, after laminating the interlayer insulation

film, etching may be performed only on the interlayer insulation film **422** made of the resin, followed by the formation of a contact hole by etching the interlayer insulation films **421**, 20 made of inorganic materials and the gate insulation film **15** using a mask made of resist.

Next, wiring or each of electrodes **423** to **427** extending to each impurity region may be formed. In the subsequent steps, an EL layer **31**, a second electrode **32**, and so on are formed according to Example 1, resulting in a light emitting device having the cross sectional structure shown in FIG. **4**B.

EXAMPLE 3

In this example, as shown in FIG. **6**A, the sequence of forming the first electrode, the contact hole, and the connecting electrode is different from that of Example 1. The structure shown in FIG. **6**A is provided for illustrating the process by which a CMP processing for flattening the first electrode can be easily performed. However, at the time of patterning for forming a connecting electrode in contact with the first electrode, etching or washing may be preferably performed such that the remainder of etching is prevented from being remained on the first electrode. For simplification, only a point different from Example 1 will be described. Here, in FIG. **6**A, the same structural components as those of FIG. **1**B are represented by the same reference numerals.

At first, according to Example 1, a contact hole is formed in each of interlayer insulation films **20**, **21**, **22**, followed by forming a first electrode **628***a*. Then, a connecting electrode **624** and wiring **23** to **27** are formed such that they are piled up in contact with the first electrode **628***a*. Subsequently, an insulating material **30** that covers the end portion of the first electrode **628***a* is formed. The subsequent steps are performed according to Example 1, resulting in the state shown in FIG. **6**A. Here, in the terminal portion, an electrode **628***b* simultaneously formed together with a first electrode **628***a* is formed on electrodes **19***a*, **19***b* simultaneously formed together with the gate electrode. In addition, FPC **6** is stuck thereon.

In addition, for flattening the surface of the first electrode **628***a*, any flattening processing such as CMP may be performed after the formation of the first electrode **682***a* or after the formation of the insulting material **30**. In the case of performing the CMP processing after the formation of the insulating material **30**, it is preferable to form an interlayer insulation film **22** to increase the adhesiveness between the insulating material **30** and the interlayer insulation film **21**.

Furthermore, FIG. **6**B shows another example in which the configuration of the interlayer insulation film is different from that of FIG. **6**A. As shown in FIG. **6**B, an interlayer insulation film **622** made of an organic resin may be formed after forming an interlayer insulation film **621** made of an inorganic insulation film on an interlayer insulation film **20**. Here, the interlayer insulation film **20** is prepared as an silicon oxynitride film having a film thickness of 50 nm by a plasma CVD method, followed by laminating an interlayer insulation film **621** made of a silicon nitride film of 20 to 50 nm in thickness by a sputtering method using a RF power supply. After that, the step of hydrogenating a semiconductor layer is performed by a heat treatment at a temperature of 300 to 550° C. for 1 to 12 hours. Subsequently, a contact hole extending to each of impurity regions is formed by removing the gate insulting film **15**, the interlayer insulation films **20**, **621**, followed by forming an interlayer insulation film **622** made of a photosensitive organic insulating material. A positive type photosensitive acryl resin film may be formed by a coating method and may be provided as an interlayer insulation film **621** having a curved surface on its upper end portion.

Furthermore, the sequence of forming these interlayer insulation films **20**, **621**, **622** and the contact hole, and the hydrogenation are not particularly limited. Alternatively, for example, the hydrogenation may be performed after forming the interlayer insulation film **20**, followed by forming the interlayer insulation film **621**. Here, in FIG. **6**B, the same structural components as those of FIG. **1**B are represented by the same reference numerals.

Furthermore, after the formation of the interlayer insulation film, a contact hole may be formed by etching using the same mask.

At first, according to Example 1, the process proceeds up to the formation of an interlayer insulation film **20**, followed by hydrogenation. After that, as shown in FIG. **7**A, an interlayer insulation film **721** is formed using an organic material such as polyimide, acrylate, polyamide, polyimide amide, resist, or benzocyclobutene or an inorganic material such as silicon oxide, silicon nitride, or silicon oxynitride by a coating method. Furthermore, an interlayer insulation film **722** made of an inorganic material is formed using a sputtering method. Here, a non-photosensitive acryl resin is used as a material of the interlayer insulation film **721** and a silicon nitride film is used as a material of the interlayer insulation film **722**. Then, forming a mask made of resist, dry etching is performed at a time or in stages to form a contact hole extending to each impurity region. Subsequently, wiring or electrodes **723** to **727** are formed. A first electrode **728***a* is formed such that a part thereof is overlapped and brought into contact with an electrode **724**. Then, an insulating material **730** is formed such that it covers the end portion of the first electrode **728***a*. Here, a non-photosensitive acryl resin is used as an insulating material **730**. In the subsequent steps, an EL layer **31**, a second electrode **32**, and so on are formed according to Example 1, resulting in a light emitting device having the cross sectional structure shown in FIG. **7**A.

Furthermore, the present example can be combined with Example 1. In this example, the non-photosensitive organic resin material is used as each of the interlayer insulation film **721** and the insulating material **730**. However, two or more combinations can be considered. For instance, the interlayer insulation film **721** may be formed using a non-photosensitive organic resin material, while the insulating material **730** may be provided as a structure using a photosensitive organic resin material.

Furthermore, as shown in FIG. **7**B, an interlayer insulation film **821** made of an inorganic material is formed on the interlayer insulation film **20** to form a contact hole extending to each impurity region. After that, an interlayer insulation film **822** is formed using an organic material such as polyimide, acrylate, polyamide, polyimide amide, resist, or benzocyclobutene or an inorganic material such as silicon oxide, silicon nitride, or silicon oxynitride by a coating method. Then, etching may be performed to form a contact hole. Furthermore, after laminating the interlayer insulation film, etching may be performed only on the interlayer insulation film **822** made of the resin, followed by the formation of a contact hole by etching the interlayer insulation films **821**, 20 made of inorganic materials and the gate insulation film **15** using a mask made of resist.

Next, wiring or each of electrodes **723** to **727** extending to each impurity region may be formed. In the subsequent steps, an EL layer **31**, a second electrode **32**, and so on are

formed according to Example 1, resulting in a light emitting device having the cross sectional structure shown in FIG. **7**B.

As shown in FIG. **8**A, furthermore, a transparent conductive film **929***a* having a large work function may be formed after forming a first electrode **928**, a connecting electrode **624**, and an insulating material **30**. It is preferable that the first electrode **928** which is connected with the current-controlling TFT is formed of a metallic film (a metallic material mainly comprising Ag or Al) having excellent reflecting properties. The first electrode **928** reflects light emitted from a layer (not shown) containing an organic compound. By the way, for simplification, the EL layer and the second electrode are not shown in FIG. **8**A.

Furthermore, an electrode to be formed after the formation of an insulating material **30** maybe provided as a layered structure. In FIG. **8**B, there is shown an example in which a metallic film (a metallic material mainly comprising Ag or Al) **929***c* having reflecting properties and a conductive film **929***a* are laminated. The structure shown in FIG. **8**B has a metallic film along the side surface of the insulating material **30**, so that light emitted in the direction parallel to the surface of the substrate can be reflected on the slant face of the metallic film **929***c*.

Furthermore, the TFT structure shown in FIG. **5**A or FIG. **5**B may be used instead of the TFT structure shown in each of FIG. **6**A, FIG. **6**B, FIG. **7**A, FIG. **7**B, FIG. **8**A, and FIG. **8**B.

EXAMPLE 4

FIGS. **9**A and **9**B shows another example in which the configuration is different from that of the above-described examples.

All the light generated on a layer containing an organic compound is not taken out from an cathode which is a transparent electrode to TFTs, but light is emitted, for example, laterally (direction in parallel to the substrate surface), and as a result, the light emitted laterally is not taken out and so constitutes a loss. Hereupon, this example shows a light emitting device structured to increase a quantity of light taken out in a certain direction in a light emitting element, and a method of manufacturing the same.

This example comprises forming a first electrode, which is made of a laminate of metallic layers, forming an insulation (called bank, partition) covering an end of the first electrode, thereafter performing etching of a portion of the insulation in self-alignment with the insulation as a mask and performing etching of a central portion of the first electrode to thin the area and to form a stepped portion on the end. Such etching thins the central portion of the first electrode into a flat surface, and that end of the first electrode, which is covered by the insulation, is made thick in shape, that is, concave-shaped (depression). And a layer containing an organic compound and a second electrode are formed on the first electrode to complete a light emitting element.

According to the configuration of this example, an inclined surface formed on a stepped portion of the first electrode reflects or collects lateral emission to increase a quantity of light taken out in a certain direction (direction passing through the second electrode).

Accordingly, a portion defining the inclined surface is preferably made of a light reflective metal, for example, a material having as a main component aluminum, silver, or the like, and the central portion in contact with the layer containing an organic compound is preferably made of an anode material having a large work function, or a cathode material having a small work function.

FIGS. **12**A and **12**B show an active matrix type light emitting device (a portion of a pixel). FIG. **12**B is a sectional view taken along the dot-dash line A–A' in FIG. **12**A.

First a base insulating film **1231** is formed on an insulating substrate **1230** having an insulating surface. The base insulating film **1231** is a laminate and the first layer is a silicon oxynitride film formed to have a thickness of 10 to 200 nm (preferably 50 to 100 nm) by plasma CVD using as reaction gas SiH_4, NH_3, and N_2O. Here, a silicon oxynitride film (composition ratio: Si=32%, O=27%, N=24%, H=17%) with a thickness of 50 nm is formed. The second layer of the base insulating film **1231** is a silicon oxynitride film formed to have a thickness of 50 to 200 nm (preferably 100 to 150 nm) by plasma CVD using as reaction gas SiH_4 and N_2O. Here, a silicon oxynitride film (composition ratio: Si=32%, O=59%, N=7%, H=2%) with a thickness of 100 nm is formed. Although the base insulating film **1231** in this example has a two-layer structure, a single layer or a laminate of more than two layers of the above insulating films may be employed instead.

Next, a semiconductor layer is formed on the base film. The semiconductor layer to serve as an active layer of the TFT is obtained by forming a semiconductor film that has an amorphous structure through a known method (sputtering, LPCVD, plasma CVD, or the like), subjecting the film to known crystallization treatment (laser crystallization, thermal crystallization, thermal crystallization using nickel or other catalysts, or the like), and then patterning the obtained crystalline semiconductor film into a desired shape. The thickness of the semiconductor layer is set to 25 to 80 nm (preferably 30 to 60 nm). The material of the crystalline semiconductor film is not limited but preferably is silicon, a silicon germanium alloy, or the like.

When laser crystallization is employed to form the crystalline semiconductor film, a pulse oscillation type or continuous wave excimer layer, YAG layer, or YVO_4 laser is used. Laser light emitted from one of such laser oscillators is collected by an optical system into a linear shape before irradiating the semiconductor film. Crystallization conditions are chosen to suit individual cases. However, when an excimer layer is employed, the pulse oscillation frequency is set to 30 Hz and the laser energy density is set to 100 to 400 mJ/cm^2 (typically 200 to 300 mJ/cm^2). When a YAG laser is employed, the second harmonic thereof is used, the pulse oscillation frequency is set to 1 to 10 kHz, and the laser energy density is set to 300 to 600 mJ/cm^2 (typically 350 to 500 mJ/cm^2). The laser light is collected to have a width of 100 to 1000 μm, for example, 400 μm, into a linear shape and the entire surface of the substrate is irradiated with this linear laser light setting the laser light overlap ratio to 80 to 98%.

Next, the surface of the semiconductor layer is washed with an etchant containing hydrofluoric acid to form a gate insulating film **1233** that covers the semiconductor layer. The gate insulating film **1233** is an insulating film containing silicon and is formed by plasma CVD or sputtering to have a thickness of 40 to 150 nm. In this example, a silicon oxynitride film (composition ratio: Si=32%, O=59%, N=7%, H=2%) is formed by plasma CVD to have a thickness of 115 nm. The gate insulating film is not limited to the silicon oxynitride film, of course, but may be a single layer or laminate of other insulating films that contain silicon.

The surface of the gate insulating film **1233** is washed and then a gate electrode is formed.

Next, the semiconductor layer is appropriately doped with an impurity element that imparts a semiconductor the p type conductivity, here, boron (B), to form a source region **1232** and a drain region **1232**. After the doping, the semiconductor layer is subjected to heat treatment, irradiation of intense light, or laser light irradiation in order to activate the impurity element. At the same time the impurity element is activated, plasma damage to the gate insulating film and plasma damage to the interface between the gate insulating film and the semiconductor layer are repaired. It is particularly effective to activate the impurity element by irradiating the substrate from the front or back with the second harmonic of a YAG laser at room temperature to 300° C. A YAG laser is a preferable activation measure because it requires little maintenance.

The subsequent steps include forming an interlayer insulating film **1235** from an organic or inorganic material (an applied silicon oxide film, PSG (phosphorus-doped glass), BPSG (glass doped with boron and phosphorus), or the like), hydrogenating the semiconductor layer, and forming contact holes reaching the source region or drain region. Then, a source electrode (wire) and a first electrode (drain electrode) **1236** are formed to complete the TFT (p-channel TFT).

Although the description in this example uses a p-channel TFT, an n-channel TFT can be formed if an n type impurity element (such as P or As) is used instead of a p type impurity element.

Formed through the above steps are the TFT (only the drain region **1232** is shown in the drawing), the gate insulating film **1233**, the interlayer insulating film **1235**, and layers **1236***a* to **1236***d* of the first electrode (FIG. **13**A).

The layers **1236***a* to **1236***d* of the first electrode in this example are each a film mainly containing an element selected from the group consisting of Ti, TiN, $TiSi_xN_y$, Al, Ag, Ni, W, WSi_x, WN_x, WSi_xN_y, Ta, TaN_x, $TaSi_xN_y$, NbN, MoN, Cr, Pt, Zn, Sn, In, and Mo, or a film mainly containing an alloy or compound material of the above elements, or a laminate of these films. The total thickness of the layers **1236***a* to **1236***d* is set between 100 nm and 800 nm.

Particularly, the layer **1236***a* of the first electrode that comes into contact with the drain region **1232** is preferably formed of a material that can form an ohmic contact with silicon, typically titanium, and is given a thickness of 10 to 100 nm. For the layer **1236***b* of the first electrode, a material that has a large work function when formed into a thin film (TiN, TaN, MoN, Pt, Cr, W, Ni, Zn, Sn) is preferred, and the thickness of the layer is set to 10 to 100 nm. For the layer **1236***c* of the first electrode, a metal material reflective of light, typically, a metal material mainly containing Al or Ag, is preferred, and the thickness of the layer is set to 100 to 600 nm. The layer **1236***b* of the first electrode also functions as a blocking layer for preventing the layers **1236***c* and **1236***a* of the first electrode from forming an alloy. For the layer **1236***d* of the first electrode, a material capable of preventing oxidation and corrosion of the layer **1236***c* of the first electrode and avoiding hillock or the like is preferred (typically a metal nitride such as TiN or WN), and the thickness of the layer is set to 20 to 100 nm.

The layers **1236***a* to **1236***d* of the first electrode can be formed at the same time other wires, for example, a source wire **1234** and a power supplying line, are formed. Accordingly, the process needs fewer photomasks (seven masks in total: a patterning mask for the semiconductor layer (Mask **1**), a patterning mask for the gate wire (Mask **2**), a doping mask for selective doping by an n type impurity element (Mask **3**), a doping mask for selective doping by a p type impurity element (Mask **4**), a mask for forming contact holes that reach the semiconductor layer (Mask **5**), a patterning mask for the first electrode, the source wire, and the power supplying line (Mask **6**), and a mask for forming an insulating material (Mask **7**)). In prior art, the first electrode is formed on a layer different from the one where the source wire and the power supplying line are formed and therefore a mask for forming the first electrode alone is needed, thus making the number of masks required 8 in total. When the layers **1236***a* to **1236***d* of the first electrode and the wires are formed at the same time, it is desirable to set the total wire electric resistance low.

Next, the insulating material (called as a bank, a partition wall, a barrier, or the like) is formed to cover the edge of the first electrode (and a portion that is in contact with the drain region **1232**) (FIG. **13**B). The insulating material is a film or a laminate of inorganic materials (such as silicon oxide, silicon nitride, and silicon oxynitride) and photosensitive or non-photosensitive organic materials (such as polyimide, acrylic, polyamide, polyimideamide, resist, and benzocyclobutene). Photosensitive organic resin is used in this example. If positive photosensitive acrylic is used as a material of the insulating material, for example, it is preferable to curve only an upper edge portion of the insulating material to give a radius of curvature. A negative photosensitive material which becomes insoluble in an etchant under light and a positive photosensitive material which becomes soluble in an etchant under light both can be used for the insulating material.

The insulating material is etched as shown in FIG. **13**C and, simultaneously, the layers **1236***c* and **1236***d* of the first electrode are partially removed. It is important to etch the films such that a slope is formed in the exposed face of the layer **1236***c* of the first electrode and the layer **1236***b* of the first electrode obtains a flat exposed face. This etching uses dry etching or wet etching, and is finished in one step or divided into several steps. Etching conditions that make the selective ratio between the layer **36***b* of the first electrode and the layer **36***c* of the first electrode high are chosen. For example, etching conditions include employing ICP etching apparatus, using as reaction gas BCl_3 and Cl_2 at a ratio of 60 (sccm):20 (sccm), and giving an RF (13.56 Mhz) power of 450 W to a coiled electrode at a pressure of 1.9 Pa. At the same time, the substrate side (sample stage) is also given an RF (13.56 Mhz) power of 100 W, a shape shown in FIG. **13**C can be obtained. Note that, size of the electrode area on the substrate side is 12.5 cm×12.5 cm, and coil-shape electrode (a quartz disc comprising a coil is used here) has 25 cm in diameter. Actually obtained photograph of TEM observation of the first electrode is shown in FIG. **19**. Preferably, the final radius of curvature of the upper edge portion of the insulating material is 0.2 to 3 μm. The final angle of the slope descending toward the center of the first electrode (the angle of inclination or taper angle) is more than 30° and less than 70°, so that the slope reflects light emitted from a layer containing an organic compound which is formed later. It is preferred that using UV light to irradiate an exposed surface of the first electrode **1236***b* to increase the work function of the first electrode **1236***b*. The work function can be increased to around 5 eV by irradiating the UV light on TiN thin film.

Next, a layer containing an organic compound **1238** is formed by evaporation or application as shown in FIG. **12**B. Note that it is preferable to perform deaeration by the application of heat in a vacuum before the formation of the layer containing the organic compound **1238**. When evaporation is chosen, for example, a film forming chamber is vacuum-exhausted until the degree of vacuum reaches

5×10^{-3} Torr (0.665 Pa) or less, preferably 10^{-4} to 10^{-6} Pa, for evaporation. Prior to evaporation, the organic compound is vaporized by resistance heating. The vaporized organic compound flies out to the substrate as the shutter is opened for evaporation. The vaporized organic compound flies upward and then deposits on the substrate through an opening formed in a metal mask. The layer containing the organic compound is formed by evaporation so that the light emitting element as a whole emits white light.

For instance, an Alq_3 film, an Alq_3 film partially doped with Nile red which is a red light emitting pigment, an Alq_3 film, a p-EtTAZ film, and a TPD (aromatic diamine) film are layered in this order to obtain white light.

On the other hand, when the layer containing the organic compound is formed by application using spin coating, the layer after application is preferably baked by vacuum heating. For example, an aqueous solution of poly(ethylene dioxythiophene)/poly(styrene sulfonic acid) (PEDOT/PSS) is applied to the entire surface and baked to form a film that works as a hole injection layer. Then, a polyvinyl carbazole (PVK) solution doped with a luminescence center pigment (such as 1, 1,4,4-tetraphenyl-1,3-butadiene (TPB), 4-dicyanomethylene-2-methyl-6-(p-dimethylamino-styryl)-4H-pyran (DCM1), Nile red, or coumarin 6) is applied to the entire surface and baked to form a film that works as a light emitting layer.

Although the organic compound layer is a laminate in the above example, a single-layer film may be used as the organic compound layer. For instance, a 1,3,4-oxadiazole derivative (PBD) capable of transporting electrons is dispersed in polyvinyl carbazole (PVK) capable of transporting holes. Another method to obtain white light emission is to disperse 30 wt % of PBD as an electron transporting agent and disperse four kinds of pigments (TPB, coumarin 6, DCM1, and Nile red) in appropriate amounts. Also, the organic compound layer may be a laminate of layers of polymeric material and layers of monomeric materials.

The next step is to form a thin film containing a metal of small function (a film of an alloy such as MgAg, MgIn, AlLi, CaF_2, or CaN, or a film formed by co-evaporation of an element belonging to Group 1 or 2 in the periodic table and aluminum) and to form a thin conductive film (an aluminum film here) **1239** thereon by evaporation (FIG. **12**B). An aluminum film is highly capable of blocking moisture and oxygen and therefore is a preferable material of the conductive film **1239** for improvement of the reliability of the light emitting device. This laminate is thin enough to let emitted light pass and functions as the cathode in this example. The thin conductive film may be replaced by a transparent conductive film (such as an ITO (indium oxide-tin oxide alloy) film, an In_2O_3—ZnO (indium oxide-zing oxide alloy) film, or a ZnO (zinc oxide) film). On the conductive film **1239**, an auxiliary electrode may be formed in order to lower the resistance of the cathode. The cathode is formed selectively by resistance heating through evaporation using an evaporation mask.

The thus obtained light emitting element emits white light in the direction indicated by the arrow in FIG. **12**B. Light emitted in the lateral direction is reflected by the slope in the layer **1236***c* of the first electrode, thereby increasing the amount of light emitted in the arrow direction.

After the manufacturing process is thus finished up through formation of the second electrode (conductive film **1239**), the light emitting element formed on the substrate **1230** is sealed by bonding a sealing substrate (transparent substrate) using a seal agent. Spacers formed from a resin film may be provided in order to keep the gap between the sealing substrate and the light emitting element. The space surrounded by the seal agent is filled with nitrogen or other inert gas. For the seal agent; an epoxy-based resin is preferred. Desirably, the material of the seal agent transmits as little moisture and oxygen as possible. A substance having an effect of absorbing oxygen and moisture (e.g., drying agent) may be placed in the space surrounded by the seal agent.

By enclosing the light emitting element in a space as above, the light emitting element can be completely cut off from the outside and external substances that accelerate degradation of the organic compound layer, such as moisture and oxygen, can be prevented from entering the light emitting element. Accordingly, a highly reliable light emitting device is obtained.

Here an example of a cross sectional view of the light emitting device is shown in FIG. **9**A. The configuration shown in FIG. **9**A can be obtained in accordance with the above-described steps and Example 1. For simplification, Here, the same structural components as those of FIG. **1**B are represented by the same reference numerals. An electrode corresponding to **1236***a* and **1236***b* in FIG. **12**B is referred to as a numeral **1024***a* in FIG. **9**A, and an electrode corresponding to **1236***c* is referred to as a numeral **1024***b* in FIG. **9**A. The steps up through the formation of the contact hole on the interlayer insulating films **20**, **21**, and **22** can be obtained according to Example 1, the subsequent steps can be obtained according to the above-described steps in the sequence of forming lines **1023** to **1027**, forming an insulating material, performing isotropic etching to form an inclined plane of the electrode **1024***b* and an inclined plane of the insulating material **1030** in a self-aligning manner, forming an EL **1031** and a second electrode **1032**. In addition, an electrode corresponding to a conductive film **1239** in FIG. **12**B is referred to as a numeral **1032** in FIG. **9**A.

As shown in FIG. **9**B, an interlayer insulation film **222** made of an organic resin may be formed after forming an interlayer insulation film **221** made of an inorganic insulation film on an interlayer insulation film **20**. Here, the interlayer insulation film **20** is prepared as an silicon oxynitride film having a film thickness of 50 nm by a plasma CVD method, followed by laminating an interlayer insulation film **221** made of a silicon nitride film of 20 to 50 nm in thickness by a sputtering method using a RF power supply. After that, the step of hydrogenating a semiconductor layer is performed by a heat treatment at a temperature of 300 to 550° C. For 1 to 12 hours. Subsequently, a contact hole extending to each of impurity regions is formed by removing the gate insulting film **15**, the interlayer insulation films **20**, **221**, followed by forming an interlayer insulation film **222** made of a photosensitive organic insulating material. A positive type photosensitive acrylic resin film may be formed by a coating method and may be provided as an interlayer insulation film **222** having a curved surface on its upper end portion.

Furthermore, the sequence of forming these interlayer insulation films **20**, **221**, **222** and the contact hole, and the hydrogenation are not particularly limited. Alternatively, for example, the hydrogenation may be performed after forming the interlayer insulation film **20**, followed by forming the interlayer insulation film **221**. Here, in FIG. **9**B, the same structural components as those of FIGS. **1**B, **3** and **9**A are represented by the same reference numerals.

In addition, the present example may be optionally combined with Embodiment or one of Examples 1 to 3 of the present invention without limitation.

EXAMPLE 5

In Example 4, there was described an example in which the interlayer insulation film having the curved surface on its upper end portion and the insulating material were formed. In this example, another example which is different from Example 4 is shown in FIG. **10**. In FIGS. **10**A and **10**B, the same structural components as those of FIG. **4**B are represented by the same reference numerals.

In the present example, there is shown an example in which, after the formation of interlayer insulation films, a contact hole is formed by etching using the same mask.

At first, according to Example 1, the process proceeds up to the formation of an interlayer insulation film **20**, followed by hydrogenation. After that, as shown in FIG. **1**A, an interlayer insulation film **321** is formed using an organic material such as polyimide, acrylate, polyamide, polyimide amide, resist, or benzocyclobutene or an inorganic material such as silicon oxide, silicon nitride, or silicon oxynitride by a coating method. Furthermore, an interlayer insulation film **322** made of an inorganic material is formed using a sputtering method. Here, a non-photosensitive acrylic resin is used as a material of the interlayer insulation film **321** and a silicon nitride film is used as a material of the interlayer insulation film **322**. Then, forming a mask made of resist, dry etching is performed at a time or in stages to form a contact hole extending to each impurity region. Subsequently, wirings or electrodes **1123** to **1127** extending to each impurity region are formed. Furthermore, as in the case of Example 4, an insulating material **1130** is formed such that it covers the end portion of a first electrode. Subsequently, the insulating material **1130** serves as a mask so as to remove apart of the electrodes to expose the first electrode **1124***a* thereby, and an electrode **1124***b* having an inclined plane is formed toward the center. Here, a non-photosensitive acrylic resin is used as an insulating material **1130**. In the subsequent steps, an EL layer **1131**, a second electrode **1132**, and soon are formed according to Example 4, resulting in a light emitting apparatus having the cross sectional structure shown in FIG. **10**A.

Furthermore, the present example can be combined with Example 4. In this example, the non-photosensitive organic resin material is used as each of the interlayer insulation film **321** and the insulating material **1130**. However, two or more combinations can be considered. For instance, the interlayer insulation film **321** may be formed using a non-photosensitive organic resin material, while the insulating material **1130** may be provided as a structure using a photosensitive organic resin material.

Further more, as shown in FIG. **10**B, an interlayer insulation film **421** made of an inorganic material is formed on the interlayer insulation film **20** to form a contact hole extending to each impurity region. After that, an interlayer insulation film **422** is formed using an organic material such as polyimide, acrylate, polyamide, polyimide amide, resist, or benzocyclobutene or an inorganic material such as silicon oxide, silicon nitride, or silicon oxynitride by a coating method. Then, etching may be performed to form a contact hole. Furthermore, after laminating the interlayer insulation film, etching may be performed only on the interlayer insulation film **422** made of the resin, followed by the formation of a contact hole by etching the interlayer insulation films **421**, **20** made of inorganic materials and the gate insulation film **15** using a mask made of resist.

Next, wirings or each of electrodes **1123** to **1127** extending to each impurity region may be formed. In the subsequent steps, an EL layer **1131**, a second electrode **1132**, and so on are formed according to Example 4, resulting in a light emitting apparatus having the cross sectional structure shown in FIG. **10**B.

Further, the present invention is not limited to the TFT structure shown in FIGS. **9**A to **10**B. As shown in FIG. **11**A, alternatively, it may be designed such that a switching TFT **70** of the pixel part has no impurity region piled on the gate electrode.

Furthermore, in the procedures of preparing the TFT shown in FIG. **11**A may be performed by making a reference to the process shown in FIG. **5**A of Example 1, so that the detailed description thereof is omitted here. In addition, in FIG. **11**A, the same structural components as those of FIGS. **1**A, **1**B, **2**, **5**A, and **9**A are represented by the same reference numerals.

Furthermore, the gate electrode may be provided as a single layer, or may have a TFT structure such as one shown in FIG. **11**B. In the case of obtaining the structure shown in FIG. **11**B, each of low-level impurity regions **12***c*, **13***c*, **14***c* is appropriately formed by doping with impurity element which provides n-type or p-type conductivity using a mask made of resist before the formation of the gate electrodes **516** to **518**, and an electrode **519** are formed, followed by forming high-level impurity regions **13***b*, **14***b*, **12***b* by self-aligning or doping using a mask made of resist. In FIG. **11**B, the same structural components as those of FIG. **1**B, FIG. **5**B, and FIG. **9**A are represented by the same reference numerals.

In addition, the present example may be optionally combined with Embodiment or one of Examples 1 to 4 of the present invention without limitation.

EXAMPLE 6

In this example, there is shown another example in FIG. **14**, which is different from Example 5 that illustrates the upper-side radiation type.

In FIG. **14**, an active matrix type light emitting device is provided as a lower-side radiation type and is designed to increase the intensity of emitted light to be taken out in a certain direction. The light emitting device and a method for manufacturing the same will be described below.

In this example, a first electrode film **1336***a* is formed from a transparent conductive film, or a thin metallic film having a translucency. Then, wiring **1336***b*, **1336***c* for making a connection between the first electrode **1336***a* and the TFT, or wiring **1334** arranged around the first electrode are formed. At the time of forming the wiring **1334** to be provided on the periphery of the first electrode, the dry etching or wet etching conditions are suitably adjusted and the cross sectional shape of the wiring **1334** is provided as a reversed taper shape as shown in FIG. **14**. The angle of a slant face of each edge of wiring **1334** and **1336***b* (inclined angle and taper angle) is over 120° and less than 160° with respect to the surface of the substrate. The slant face will reflect the light emitted from a layer **1338** containing an organic compound to be formed later.

In the structure of the present example, the slant face of each of the wiring **1334**, **1336***b* formed on the periphery of the first electrode reflects or gathers light emitted in the lateral direction to increase the intensity of emitted light to be taken out in the one direction (the direction of passing through the first electrode).

An insulating material **1337** (referred to as bank or shield) that covers the reverse taper-shaped wiring **1334** and the end portion of the first electrode **1336***a* is prepared using an organic material or an inorganic material by a coating

method, a layer **1338** containing an organic compound is formed on the first electrode **1336***a*, and a second electrode **1339** is formed, completing the preparation of a light emitting element.

Consequently, it is preferable to make each of electrodes **1336***b*, **1336***c* or wiring **1334** having the slant face using a material mainly comprised of a metal that reflects light, such as aluminum or silver. Also, the electrode **1336***c* is provided as an upper layer of the contacting electrode, while the electrode **1336***b* provided as a lower layer of the contacting electrode. Thus, the electrode **1336***c* may be preferably made of a material that protects the electrode **1336***b* from oxidation, corrosion, or the generation of hillock or the like, typically for example metal nitride (e.g., TiN or WN), with a film thickness of 20 to 100 nm. Furthermore, the electrode or wiring having a slant face may be provided with a three-layered structure, and a material capable of being in contact with the drain region **1332** and forming an ohmnic contact with silicon (typically, titanium) with a film thickness of 10 to 100 nm.

In FIG. **14**, the reference numerals **1330** denotes a substrate having an insulating surface, **1331** denotes an insulating base film, **1332** denotes a source region or a drain region, **1333** denotes a gate insulation film, **1335** denotes an interlayer insulation film formed of an organic material or an inorganic material (containing a coated silicon oxide film, phosphorus supplied glass (PSG), boron-and-phosphorus supplied glass (BPSG), and so on), **1338** denotes a layer containing an organic compound, and **1339** denotes a second electrode comprising a thin layer containing a metal having a small work function (an alloy such as MgAg, MgIn, AlLi, CaF_2, or CaN, or a film formed by co-deposition between an element of Group 1 or 2 in the periodic table and aluminium) and a conductive film (an aluminum film in this example) formed thereon.

Furthermore, the first electrode **1336***a* may be a transparent conductive film (such as an indium tin oxide alloy (ITO), an indium zinc oxide alloy (In_2O_3—ZnO),or zinc oxide (ZnO)). Alternatively, the first electrode **1336***a* may be a thin film of a metallic material (TiN, Pt, Cr, W, Ni, Zn, or Sn) with a large work function, for example a metal thin film having a translucency with a film thickness of 10 to 100 nm.

In addition, the present example may be optionally combined with Embodiment or one of Examples 1 to 5 of the present invention without limitation.

EXAMPLE 7

In this example, referring to FIGS. **15**A and **15**B, we will describe an example in which an additional interlayer insulation film is provided to make the first electrode and the connecting electrode different from each other. For simplifying the description, only a point different from the procedures of obtaining the cross sectional structure shown in FIG. **1**B will be described. In FIG. **15**A and FIG. **15**B, the same structural components as those of FIGS. **1**A and **1**B are represented by the same numerals as those of FIGS. **1**A and **1**B.

At first, according to Example 1, a contract hole is formed in each of interlayer insulation film **20**, **21**, and **22**. Then, electrodes **23**, **1424**, and **25** to **27** (i.e., a source wiring, a power supply line, a lead electrode, a capacity wiring, and a connecting electrode) and so on are formed using Al, Ti, Mo, W, or the like.

Subsequently, an innerlayer insulation film **1431** is formed. As such an interlayer insulation film **1431**, a photosensitive or non-photosensitive organic material (such as polyimide, acrylate, polyamide, polyimide amide, resist, or benzocyclobutene) or an inorganic material (such as silicon oxide, silicon nitride, or silicon oxynitride) by prepared by a sputtering method, a CVD method, or a coating method, a laminate thereof, or the like may be used.

In this embodiment, a positive type photosensitive acryl resin film is formed by a coating method at first. Then, the interlayer insulation film **1431** having a curved surface is formed on the upper end portion of the above acryl resin film. Furthermore, although not shown in the figure, an inorganic insulation film (e.g., a silicon nitride film) having a film thickness of 20 nm to 50 nm may be formed using a sputtering method with RF power supply covering the interlayer insulation film **1431**.

Subsequently, a first electrode **1428***a* is formed. In this example, for functioning the first electrode **1428***a* as an anode of an EL element, the first electrode **1428***a* is a transparent conductive film having a large work function (such as an indium tin oxide alloy (ITO), an indium zinc oxide alloy (In_2O_3—ZnO), or zinc oxide (ZnO)). Alternatively, the first electrode **1428***a* may be a metallic material having a large work function.

In the case of designing the light emitting device as an upper-side radiation type in which light emitted from the EL layer **31** passes through the second electrode **1432**, the second electrode **1432** may be prepared by appropriately selecting and adjusting a material and a film thickness thereof so as to provide the second electrode **1432** with transparency. Alternatively, in the case of designing the light emitting device as a lower-side radiation type in which light emitted from the EL layer **31** passes through the first electrode **1428***a*, the first electrode **1428***a* may be prepared by appropriately selecting and adjusting a material and a film thickness thereof so as to provide the first electrode **1428***a* with transparency. Furthermore, in the case of a lower-side radiation type, it is preferable to use a transparent material for interlayer insulation films **1431** and **21**.

Furthermore, for flattening the surface of the first electrode **1428***a*, the flattening treatment such as CMP may be performed before or after the formation of the first electrode **1428***a*, or after the formation of the insulating material **1430** subsequent to the formation of the first electrode **1428***a*. When the CMP processing is performed, it is preferable to form an inorganic insulation film (not shown) on the interlayer insulation film **1431** for improving adhesiveness.

Subsequently, insulating materials **1430** referred to as banks are formed on the both ends so as to cover end portions of the first electrode **1428***a*. The bank **1430** may be formed of an organic resin film or a silicon-containing insulation film. Here, as an insulating material **1430**, a positive type photosensitive acryl resin film is used to form the back in a shape shown in FIG. **15**A.

Furthermore, an EL layer **31** and a second electrode (a cathode of the EL element) **1432** are formed on the first electrode **1428***a* having both ends coated with the banks **1430**. A thin film containing a metal having a small work function (an alloy such as MgAg, MgIn, AlLi, CaF_2, or CaN, or a film formed by co-deposition between an element of Group 1 or 2 in the periodic table and aluminium), and a conductive film (an aluminum film in this example) is deposited on the thin film to form a laminate film. The laminate film has a sufficient film thickness enough to allow the emitted light to pass through the laminate film. In this embodiment, the laminate film is functioned as a cathode. In addition, instead of the thin conductive film, a transparent

conductive film (such as an indium tin oxide alloy (ITO), an indium zinc oxide alloy (In_2O_3—ZnO), or zinc oxide (ZnO)) may be used.

The light emitting element thus obtained can be provided as an upper-side radiation type or a lower-side radiation type by appropriately selecting materials of the first electrode **1428***a* and the second electrode **1432**. In the subsequent steps, an EL layer **31**, other structural components are formed according to Example 1, resulting in a light emitting device having the cross sectional structure shown in FIG. **15**A.

Here, in the terminal portion, an electrode **1428***b* simultaneously formed together with a first electrode **1428***a* is formed on electrodes **19***a*, **19***b* simultaneously formed together with the gate electrode. In addition, FPC **6** is stuck thereon.

Furthermore, as shown in FIG. **15**B, an interlayer insulation film **622** made of an organic resin may be formed after forming an interlayer insulation film **621** made of an inorganic insulation film on an interlayer insulation film **20**. Here, the interlayer insulation film **20** is prepared as an silicon oxynitride film having a film thickness of 50 nm by a plasma CVD method, followed by laminating an interlayer insulation film **621** made of a silicon nitride film of 20 to 50 nm in thickness by a sputtering method using a RF power supply. After that, the step of hydrogenating a semiconductor layer is performed by a heat treatment at a temperature of 300 to 550° C. For 1 to 12 hours. Subsequently, a contact hole extending to each of impurity regions is formed by removing the gate insulting film **15**, the interlayer insulation films **20**, **621**, followed by forming an interlayer insulation film **622** made of a photosensitive organic insulating material. A positive type photosensitive acryl resin film may be formed by a coating method and may be provided as an interlayer insulation film **622** having a curved surface on its upper end portion.

Furthermore, the sequence of forming these interlayer insulation films **20**, **621**, **622** and the contact hole, and the hydrogenation are not particularly limited. Alternatively, for example, the hydrogenation may be performed after forming the interlayer insulation film **20**, followed by forming the interlayer insulation film **621**. Here, in FIG. **15**B, the same structural components as those of FIG. **1**B and FIG. **15**A are represented by the same reference numerals.

In this example, furthermore, the photosensitive organic resin is used for each of the interlayer insulation films **21**, **1431**, and the insulating material **1430**. In addition, each of them has the curved surface on its upper end portion. According to the present invention, however, it is not particularly limited to such a structure. One of these layers may be formed using an inorganic insulating film. Alternatively, one of these layers may be formed of a non-photosensitive organic resin such that the upper end thereof may be tapered. In case of washing before forming an EL layer **31**, the tapered end of the insulating material **1430** may prevent the foreign substance (dust or the like) from being remained at the end portion.

Furthermore, the present example may be optionally combined with Embodiment or one of Examples 1 to 6 of the present invention without limitation.

EXAMPLE 8

In this example, there is shown another example in FIG. **16**, a part of which is different from Example 4. In FIG. **16**, the same structural components as those of FIG. **1**B are represented by the same reference numerals for the sake of simplification.

In this example, there is described an example in which a contact hole is formed in each of an interlayer insulation film **20** and a gate insulation film **15**, followed by forming wiring **1525**, **1526**, **1527** for connecting one of a source region or a drain region **12***b*, or a source electrode or a drain electrode of TFT in a driving circuit. After forming these electrodes, an interlayer insulation film **1521** is formed and a contact hole extending to the source region or the drain region **12***b* is formed. Then, according to Example 1, a first electrode **1524***a* and **1524***b* in contact with the source region or the drain region **12***b* is formed. Subsequently, an insulating material **1530** (referred to as a bank or a partition) that covers the end portion of the first electrode **1524***a* and **1524***b* is formed, followed by etching a part of the insulating material **1530** using the insulating material **1530** as a mask in a self-aligning manner while thinly etching the center of the first electrode **1524***b* to form steps on the end portion thereof.

In this example, the first electrode **1524***b* and the wiring **1525** to **1527** are formed on the different layers, so that it is possible to extend the flat area of the first electrode **1524***b* and to increase the degree of integration.

In this example, it is preferable to design the light emitting element as an upper-side radiation type. FIG. **18**A is a top view of an example of the pixel, and FIG. **18**B is an equivalent circuit of FIG. **18**A. The detailed description of the configuration of the pixel shown in FIGS. **18**A and **18**B can be found in U.S. patent application Ser. No. 10/245,711. Each pixel comprises a power source circuit, a switching part, and a light emitting element. The light emitting element, the current source circuit, and the switching part are connected in series between a power supply base line and a power supply line. Using a digital picture signal, the switching part can be switched on and off. In addition, the intensity of a constant current passing through the current source circuit is defined on the basis of a control signal entered from the outside of the pixel. When the switching part is in an ON state, the constant current defined by the current source circuit is fed into the light emitting element to allow light emission therefrom. When the switching part is in an OFF state, the flow of current into the light emitting element is not occurred and thus light emission from the light emitting element cannot be occurred. Consequently, a gradation can be represented by controlling the ON and OFF states of the switching part using picture signals. Consequently, a display apparatus having the following advantages can be attained by the configuration of the pixel as shown in FIGS. **18**A and **18**B. That is, a display apparatus allows light emitting element to emit light at a constant brightness without depending on a change in the current characteristics due to deterioration or the like. In addition, the signal can be written to each pixel at a high writing speed to allow the representation of a correct gradation. Further, the display apparatus can be manufactured at low costs and can be downsized.

In FIG. **18**, the reference numeral **1851** denotes a signal line, **1852** denotes a selective gate line, **1853** denotes a current line, **1854** denotes a power supply line, **1855** denotes an erasure gate line, **1856** denotes a current gate line, **1857** denotes a selective transistor, **1858** denotes a driving transistor, **1859** denotes a video capacity, **1860** denotes an erasure transistor, **1861** denotes a current source transistor, **1862** denotes an input transistor, **1863** denotes a retention

transistor, **1864** denotes a current source capacity, and **1865** denotes a light emitting element.

In FIGS. **18**A and **18**B, but not limited to, the driving transistor **1858** is a p-channel transistor, the selective transistor **1857** and the erasure transistor **1855** are n-channel transistors. Alternatively, each of the selective transistor **1857**, the driving transistor **1858**, and the erasure transistor **1855** may be an n-channel transistor or a p-channel transistor.

A gate electrode of the selective transistor **1857** is connected to the selective gate line **1852**. The one of a source terminal and a drain terminal of the selective transistor **1857** is connected to a signal line **1851** and the other thereof is connected to a gate electrode of the driving transistor **1858**. The one of a source terminal and a drain terminal of the driving transistor **1858** is connected to the terminal of the light emitting element **1865** and the other terminal is connected to the erasure transistor **1860**. Furthermore, the one of electrodes of the video capacity **1859** is connected to the gate electrode of the driving transistor **1858** and the other thereof of is connected to the power supply line **1854**. The one of a source terminal and a drain terminal of the erasure transistor **1860** is connected to the gate electrode of the current source transistor **1861** and the input transistor **1862**, and the other thereof is connected to the driving transistor **1858**. A gate electrode of the erasure transistor **1860** is connected to the erasure gate line **1855**.

By the way, the source terminal and the drain terminal of the erasure transistor **1860** are not limited to the above connecting structures. Alternatively, various kinds of connecting structures may be allowable, for example a connecting structure for releasing electric charges retained in the holding capacity by switching on the erasure transistor.

Furthermore, the present invention is not limited to the TFT structure shown in FIG. **16**. As shown in FIG. **17**A, alternatively, it may be designed such that a switching TFT **70** of the pixel part has no impurity region piled on the gate electrode.

Furthermore, in the procedures of preparing the TFT shown in FIG. **17**A may be performed by making a reference to the process shown in FIG. **5**A, so that the detailed description thereof is omitted here. In addition, in FIG. **17**A, the same structural components as those of FIG. **2**, FIG. **5**A, and FIG. **16** are represented by the same reference numerals.

Furthermore, the gate electrode may be provided as a single layer, or may have a TFT structure such as one shown in FIG. **17**B. In the case of obtaining the structure shown in FIG. **17**B, each of low-level impurity regions **12***c*, **13***c*, **14***c* is appropriately formed by doping with impurity element which provides n-type or p-type conductivity using a mask made of resist before the formation of the gate electrode, gate electrodes **516** to **518**, and an electrode **519** are formed, followed by forming high-level impurity regions **13***b*, **14***b*, **12***b* by self-aligning or doping using a mask made of resist. In FIG. **17**B, the same structural components as those of FIG. **1**B, FIG. **5**B, and FIG. **16** are represented by the same reference numerals.

In addition, the present example may be optionally combined with Embodiment or one of Examples 1 to 5 of the present invention without limitation.

EXAMPLE 9

A method of combining a white color light emitting element and a color filter (hereinafter, referred to as color filter method) will be explained in reference to FIG. **20**A as follows.

The color filter method is a system of forming a light emitting element having an organic compound film displaying white color luminescence and passing the provided white color luminescence through a color filter to thereby achieve luminescence of red, green, blue.

For obtaining white luminescence, there are various kinds of methods known in the art. Here, we will describe a case of using a light emitting layer made of a high polymeric material, which can be formed by coating. In this case, the doping of pigments into the high polymeric material to be formed into the light emitting layer may be performed by the conditioning of the solution. In other words, it can be attained extremely easily, compared with an evaporation method that performs a co-deposition for doping a plurality of pigments.

Specifically, after coating an aqueous solution of poly (ethylenedioxythiophene)/poly (stylenesulfonic acid) (PEDOT/PSS) operated as a hole injecting layer over an entire face of an anode comprising a metal having large work function (Pt, Cr, W, Ni, Zn, Sn, In), thereafter coating and sintering a polyvinyl carbazole (PVK) solution doped with a light emitting core pigment (1,1,4,4-tetraphenyl 1,3-butadience (TPB), 4-dicyanomethylene-2-methyl-6-(p-dimethylaminostyryl)-4H-pyran (DCM1), Nile red, coumarin 6 or the like) operating as the light emitting layer over the entire face, a cathode comprising a laminated layer of a thin film including metal having small work function (Li, Mg, Cs) and a transparent conductive film (ITO (indium oxide tin oxide alloy), indium oxide zinc oxide alloy (In_2O_3—ZnO), zinc oxide (ZnO) or the like) laminated thereabove is formed. Further, PEDOT/PSS uses water as a solvent and is not dissolved in an organic solvent. Therefore, even when PVK is coated thereabove, there is no concern of dissolving again. Further, kinds of solvents of PEDOT/PSS and PVK differ from each other and therefore, it is preferable that the same film forming chamber is not used therefor.

Further, although an example of laminating organic compound layers is shown in the above-described example, a single layer of an organic compound layer can be constituted. For example, 1,3,4-oxadiazole derivative (PBD) having electron transporting performance may be dispersed in polyvinyl carbazole (PVK) having hole transporting performance. Further, white color luminescence is achieved by dispersing 30 wt % of PBD as an electron transporting agent and dispersing pertinent amounts of four kinds of color pigments (TPB, coumarin 6, DCM1, Nile red).

Further, the organic compound film is formed between the anode and the cathode and by recombining holes injected from the anode and electrons injected from the cathode at the organic compound film, white color luminescence is achieved in the organic compound film.

Further, it is also possible to achieve white color luminescence as a whole by pertinently selecting an organic compound film for carrying out red color luminescence, an organic compound film for carrying out green color luminescence and an organic compound film for carrying out blue color luminescence and laminating the films to mix color.

The organic compound film formed as described above can achieve white color luminescence as a whole.

A color filter may be arranged along the direction of emitting white luminescence from the above organic compound film. The color filter has a pigmented layer (R) that absorbs luminescence except red luminescence, a pigmented layer (G) that absorbs luminescence except green luminescence, and a pigmented layer (B) that absorbs luminescence except blue luminescence. Therefore, white luminescence

from the light emitting element can be separated into different colors, so that red, green, and blue luminescence can be obtained. In the case of an active matrix type light emitting device, a thin-film transistor (TFT) is formed between the substrate and the color filter.

Furthermore, the pigmented layers (R, G, B) may have a stripe pattern, which is a most simple pattern, or may be selected from a diagonal mosaic arrangement, a trigonal pattern, a RGBG four-pixel arrangement, a RGBW four-pixel arrangement, and so on.

The pigmented layers that form the color filter are prepared using color resists formed of organic photosensitive material in which pigments are dispersed, respectively. By the way, the chromaticity coordinate of the white luminescence is (x, y)=(0.34, 0.35). It is known that color reproducibility performance as full color is sufficiently ensured when the white color luminescence is combined with the color filter.

In this case, furthermore, even though the resulting luminescence color is different, there is no need to form the organic compound films by independently coating them every luminescence color because all of them are prepared from the organic compound film that represents white luminescence. In addition, a circular polarizing plate for preventing specular reflexion is not particularly required.

Next, we will describe a color changing medium (CCM) method which can be realized by combining a blue light emitting element having a blue-luminescent organic compound film and a fluorescent color-changing layer with reference to FIG. **20**B.

The CCM method performs a color change with each color-changing layer by exciting the fluorescent color-changing layer with blue luminescence radiated from the blue light emitting element. Concretely, the color-changing layer performs the change from blue to red (B→R), the color-changing layer performs the change from blue to green (B→G), and the color-changing layer performs the change from blue to blue (B→B) (the change from blue to blue may be omitted) to obtain red, green, and blue light emission, respectively. In the case of the CCM method, the structure having TFT between the substrate and the color-changing layer is provided in an active matrix type light emitting layer.

In this case, also, there is no need to form the organic compound films by coating in dependently. In addition, a circular polarizing plate for preventing specular reflexion is not particularly required.

Furthermore, in the case of using the CCM method, the color-changing layer is fluorescent, so that it can be excited by outside light, causing a decrease in contrast. Therefore, it is preferable to increase the contrast by attaching a color filter or the like as shown in FIG. **20**C.

In addition, the present example may be optionally combined with Embodiment or one of Examples 1 to 8 of the present invention without limitation.

EXAMPLE 10

By implementing the present invention, all of electronic apparatuses into which modules having an EL element (such as an active matrix EL module) are built can be completed.

Following can be given as such electronic apparatuses: video cameras; digital cameras; head mounted displays (goggle type displays); car navigation systems; projectors; car stereos; personal computers; electronic game machines; portable information terminals (mobile computers, mobile phones or electronic books etc.) etc. Practical examples thereof are shown in FIGS. **21**A to **22**C.

FIG. **21**A is a personal computer which comprises: a main body **2001**; an image input section **2002**; a display section **2003**; and a keyboard **2004** etc.

FIG. **21**B is a video camera which comprises: a main body **2101**; a display section **2102**; a voice input section **2103**; operation switches **2104**; a battery **2105** and an image receiving section **2106** etc.

FIG. **21**C is a mobile computer which comprises: a main body **2201**; a camera section **2202**; an image receiving section **2203**; operation switches **2204** and a display section **2205** etc.

FIG. **21**D is a goggle type display which comprises: a main body **2301**; a display section **2302**; and an arm section **2303** etc.

FIG. **21**E is a player using a recording medium in which a program is recorded (hereinafter referred to as a recording medium), which comprises: a main body **2401**; a display section **2402**; a speaker section **2403**; a recording medium **2404**; and operation switches **2405** etc. This apparatus uses DVD (digital versatile disc), CD, etc. For the recording medium, and can enjoy music, film, games and use for Internet.

FIG. **21**F is a digital camera which comprises: a main body **2501**; a display section **2502**; a view finder **2503**; operation switches **2504**; and an image receiving section (not shown in the figure) etc.

FIG. **22**A is a mobile phone which comprises: a main body **2901**; a voice output section **2902**; a voice input section **2903**; a display section **2904**; operation switches **2905**; an antenna **2906**; and an image input section (CCD, image sensor, etc.) **2907** etc.

FIG. **22**B is a portable book (electronic book) which comprises: a main body **3001**; display sections **3002** and **3003**; a recording medium **3004**; operation switches **3005** and an antenna **3006** etc.

FIG. **22**C is a display which comprises: a main body **3101**; a supporting section **3102**; and a display section **3103** etc.

In addition, the display shown in FIG. **22**C has a screen in small and medium or large size, for example a size of 5 to 20 inches. Further, to manufacture the display part with such sizes, it is preferable to mass-produce by gang printing by using a substrate with one meter on a side.

As described above, the applicable range of the present invention is so wide that the invention can be applied to electronic apparatuses of various fields. Note that the electronic apparatuses of this example can be achieved by utilizing any combination of constitutions in Embodiment, and Examples 1 to 9.

According to the present invention, an active matrix type light emitting device having high reliability can be realized.

What is claimed is:

1. A light emitting device including:

a pixel part having a light emitting element and a first thin film transistor between a first substrate and a second substrate; and

a driving circuit having a plurality of second thin film transistors,

wherein the light emitting element has a first electrode, a layer containing an organic compound on the first electrode, and a second electrode on the layer containing the organic compound,

wherein the first thin film transistor is coated with an interlayer insulation layer comprised of an organic

insulation film and an inorganic insulation film that covers the organic insulation film;

wherein the inorganic insulation film has a curved surface along an upper end portion of the organic insulation film; and

wherein an end portion of the first electrode is coated with an insulating material having a curved surface on an upper end portion.

2. A light emitting device, according to claim **1**,

wherein the first thin film transistor is electrically connected to the first electrode, and

wherein a wiring connected to one of a source region and a drain region of the thin film transistor is in contact with a part of the first electrode and is provided on the first electrode.

3. A light emitting device according to claim **1**,

wherein the first thin film transistor is electrically connected to the first electrode, and

wherein the first electrode is in contact with a part of a wiring connected to one of a source region and a drain region of the thin film transistor and is provided on the wiring.

4. A light emitting device according to claim **1**,

wherein the first electrode has a slant face and a slanting angle is 30° to 70°.

5. A light emitting device according to claim **1**,

wherein the insulating material has a curved surface with a curvature radius on an upper end portion, and the curvature radius is 0.2 μm to 3 μm.

6. A light emitting device according to claim **1**,

wherein the layer containing the organic compound is one of a material that emits red light, a material that emits green light, or a material that emits blue light.

7. A light emitting device according to claim **1**,

wherein the layer containing the organic material is a material that emits white light and is used in combination with a color filter.

8. A light emitting device according to claim **1**,

wherein the layer containing the organic compound is a material that emits monocolor light and is used in combination with a color-changing layer.

9. A light emitting device according to claim **1**,

wherein the light emitting device is one selected from the group consisting of a video camera, a digital camera, a goggles-type display, a car navigation system, a personal computer, a DVD player, electronic playing equipment, and a personal digital assistant.

10. A light emitting device including:

a pixel part having a light emitting element and a first thin film transistor between a first substrate and a second substrate; and

a driving circuit having a plurality of second thin film transistors,

wherein the light emitting element has a first electrode, a layer containing an organic compound on the first electrode, and a second electrode on the layer containing the organic compound;

wherein the first thin film transistor is coated with an interlayer insulation layer comprised of a laminate of an inorganic insulation film and an organic insulation film;

wherein a step is formed in an opening portion between a side surface of the inorganic insulation film and a side surface of the organic insulation film;

wherein an upper end of the organic film has a curved surface; and

wherein an end portion of the first electrode is coated with an insulating material having a curved surface on an upper end portion.

11. A light emitting device according to claim **10**,

wherein the first thin film transistor is electrically connected to the first electrode, and

wherein a wiring connected to one of a source region and a drain region of the thin film transistor is in contact with a part of the first electrode and is provided on the first electrode.

12. A light emitting device according to claim **10**,

wherein the first thin film transistor is electrically connected to the first electrode, and

wherein the first electrode is in contact with a part of a wiring connected to one of a source region and a drain region of the thin film transistor and is provided on the wiring.

13. A light emitting device according to claim **10**,

wherein the first electrode has a slant face and a slanting angle is 30° to 70°.

14. A light emitting device according to claim **10**,

wherein the insulating material has a curved surface with a curvature radius on an upper end portion, and the curvature radius is 0.2 μm to 3 μm.

15. A light emitting device according to claim **10**,

wherein the layer containing the organic compound is one of a material that emits red light, a material that emits green light, or a material that emits blue light.

16. A light emitting device according to claim **10**,

wherein the layer containing the organic material is a material that emits white light and is used in combination with a color filter.

17. A light emitting device according to claim **10**,

wherein the layer containing the organic compound is a material that emits monocolor light and is used in combination with a color-changing layer.

18. A light emitting device according to claim **10**,

wherein the light emitting device is one selected from the group consisting of a video camera, a digital camera, a goggles-type display, a car navigation system, a personal computer, a DVD player, electronic playing equipment, and a personal digital assistant.

19. A light emitting device including:

a pixel part having a light emitting element and a first thin film transistor between a first substrate and a second substrate; and

a driving circuit having a plurality of second thin film transistors,

wherein the light emitting element has a first electrode, a layer containing an organic, compound on the first electrode, and a second electrode on the layer containing the organic compound,

wherein the first thin film transistor is coated with an interlayer insulation layer comprised of an organic insulation film and an inorganic insulation film that covers the organic insulation film;

wherein the inorganic insulation film has curved surface along an upper end portion of the organic insulation film; and

wherein an end portion of the first electrode has a slant face, the slant face reflects light emitted from the layer containing the organic compound.

20. A light emitting device according to claim **19**,

wherein the first thin film transistor is electrically connected to the first electrode, and

wherein a wiring connected to one of a source region and a drain region of the thin film transistor is in contact wit apart of the first electrode and is provided on the first electrode.

21. A light emitting device according to claim **19**,

wherein the first thin film transistor is electrically connected to the first electrode, and

wherein the first electrode is in contact with a part of a wiring connected to one of a source region and a drain region of the thin film transistor and is provided on the wiring.

22. A light emitting device according to claim **19**,

wherein the first electrode has a slant face and a slanting angle is 30° to 70°.

23. A light emitting device according to claim **19**,

wherein the insulating material has a curved surface with a curvature radius on an upper end portion, and the curvature radius is 0.2 μm to 3 μm.

24. A light emitting, device according to claim **19**,

wherein the layer containing the organic compound is one of a material that emits red light, a material that emits green light, or a material tat emits blue light.

25. A light emitting device according to claim **19**,

wherein the layer containing the organic material is a material that emits white light and is used in combination with a color filter.

26. A light emitting device according to claim **19**,

wherein the layer containing the organic compound is a material that emits monocolor light and is used in combination with a color-changing layer.

27. A light emitting device according to claim **19**,

wherein the light emitting device is one selected from the group consisting of a video camera, a digital camera, a goggles-type display, a car navigation system, a personal computer, a DVD player, electronic playing equipment, and a personal digital assistant.

28. A light emitting device including:

a pixel part having a light emitting element and a first thin film transistor between a first substrate and a second substrate; and

a driving circuit having a plurality of second thin film transistors,

wherein the light emitting element has a first electrode, a layer containing an organic compound on the first electrode, and a second electrode on the layer containing the organic compound;

wherein the first thin film transistor is coated with an interlayer insulation layer comprised of a laminate of an inorganic insulation film and an organic insulation film;

wherein a step is formed in an opening portion between a side surface of the inorganic insulation film and a side surface of the organic insulation film;

wherein an upper end of the organic film has a curved surface; and

wherein an end portion of the first electrode has a slant face, the slant face reflects light emitted from the layer containing the organic compound.

29. A light emitting device according to claim **28**,

wherein the first thin film transistor is electrically connected to the first electrode, and

wherein a wiring connected to one of a source region and a drain region of the thin film transistor is in contact with a part of the first electrode and is provided on the first electrode.

30. A light emitting device according to claim **28**,

wherein the first thin film transistor is electrically connected to the first electrode, and

wherein the first electrode is in contact with a part of a wiring connected to one of a source region and a drain region of the thin film transistor and is provided on the wiring.

31. A light emitting device according to claim **28**,

wherein the first electrode has a slant face and a slanting angle is 30° to 70°.

32. A light emitting device according to claim **28**,

wherein the insulating material has a curved surface with a curvature radius on an upper end portion, and the curvature radius is 0.2 μm to 3 μm.

33. A light emitting device according to claim **28**,

wherein the layer containing the organic compound is one of a material that emits red light, a material that emits green light, or a material that emits blue light.

34. A light emitting device according to claim **28**,

wherein the layer containing the organic material is a material that emits white light and is used in combination with a color filter.

35. A light emitting device according to claim **28**,

wherein the layer containing the organic compound is a material that emits monocolor light and is used in combination with a color-changing layer.

36. A light emitting device according to claim **28**,

wherein the light emitting device is one selected from the group consisting of a video camera, a digital camera, a goggles-type display, a car navigation system, a personal computer, a DVD player, electronic playing equipment, and a personal digital assistant.

* * * * *