US006476419B1

(12) **United States Patent**
Yasuda

(10) **Patent No.: US 6,476,419 B1**
(45) **Date of Patent: Nov. 5, 2002**

(54) **ELECTROLUMINESCENCE DISPLAY DEVICE**

(75) Inventor: **Hitoshi Yasuda**, Gifu (JP)

(73) Assignee: **Sanyo Electric Co. Ltd.** (JP)

(*) Notice: Subject to any disclaimer, the term of this patent is extended or adjusted under 35 U.S.C. 154(b) by 0 days.

(21) Appl. No.: **09/501,411**

(22) Filed: **Feb. 9, 2000**

(30) **Foreign Application Priority Data**

Feb. 9, 1999 (JP) 11-031388

(51) **Int. Cl.**[7] **H01L 29/04**

(52) **U.S. Cl.** **257/72**; 257/59; 257/71; 345/76; 345/92

(58) **Field of Search** 257/72, 59, 71; 315/169.3; 345/76, 92

(56) **References Cited**

U.S. PATENT DOCUMENTS

5,714,790 A * 2/1998 Sakamoto 257/440
5,895,936 A * 4/1999 Lee 257/59
6,046,547 A * 4/2000 Nishio et al. 315/169.3
6,104,041 A * 8/2000 Hsueh et al. 257/59
6,137,551 A * 10/2000 Jeong 349/38
6,246,179 B1 * 6/2001 Yamada 315/169.3
6,252,248 B1 * 6/2001 Sano et al. 257/59

FOREIGN PATENT DOCUMENTS

JP 62204568 * 9/1987 ..... 257/59

* cited by examiner

Primary Examiner—Eddie Lee
Assistant Examiner—Eugene Lee
(74) *Attorney, Agent, or Firm*—Cantor Colburn LLP

(57) **ABSTRACT**

An organic EL display device comprises a first TFT (**30**) for switching; a second TFT (**40**) for driving an organic EL element; and an organic EL element (**60**) having an anode (**61**), a cathode (**67**), an emissive element layer (**66**) interposed between both electrodes. Additionally, a first storage capacitor electrode (**54**) comprising Cr and a second storage capacitor electrode (**55**) also functioning as a p-Si film which is a source (**31**s) of the first TFT (**30**) constitute a first storage capacitor (**70**) via a gate insulating film (**12**), while said second storage capacitor electrode (**55**) and a third storage capacitor electrode (**56**) formed by extending a part of a power supply line (**53**) for causing the organic EL element (**60**) to emit light are arranged to be opposed to each other via an interlayer insulating film **15** to form a second storage capacitor (**80**). Thus, it is possible to implement a light emissive display device which achieves bright display while sufficiently holding charges within one pixel without reducing the aperture ratio.

14 Claims, 6 Drawing Sheets

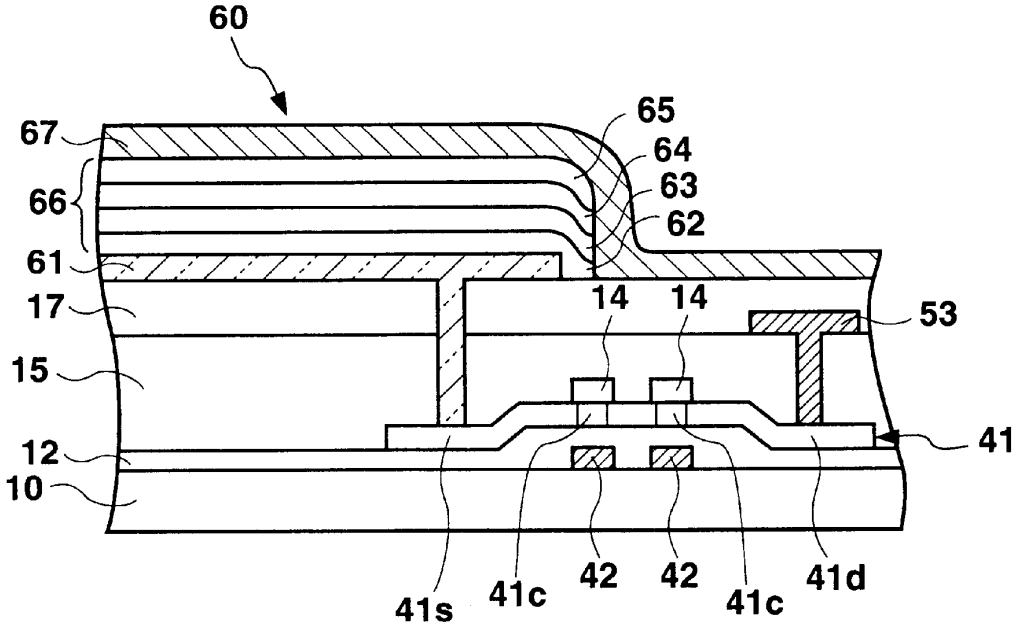

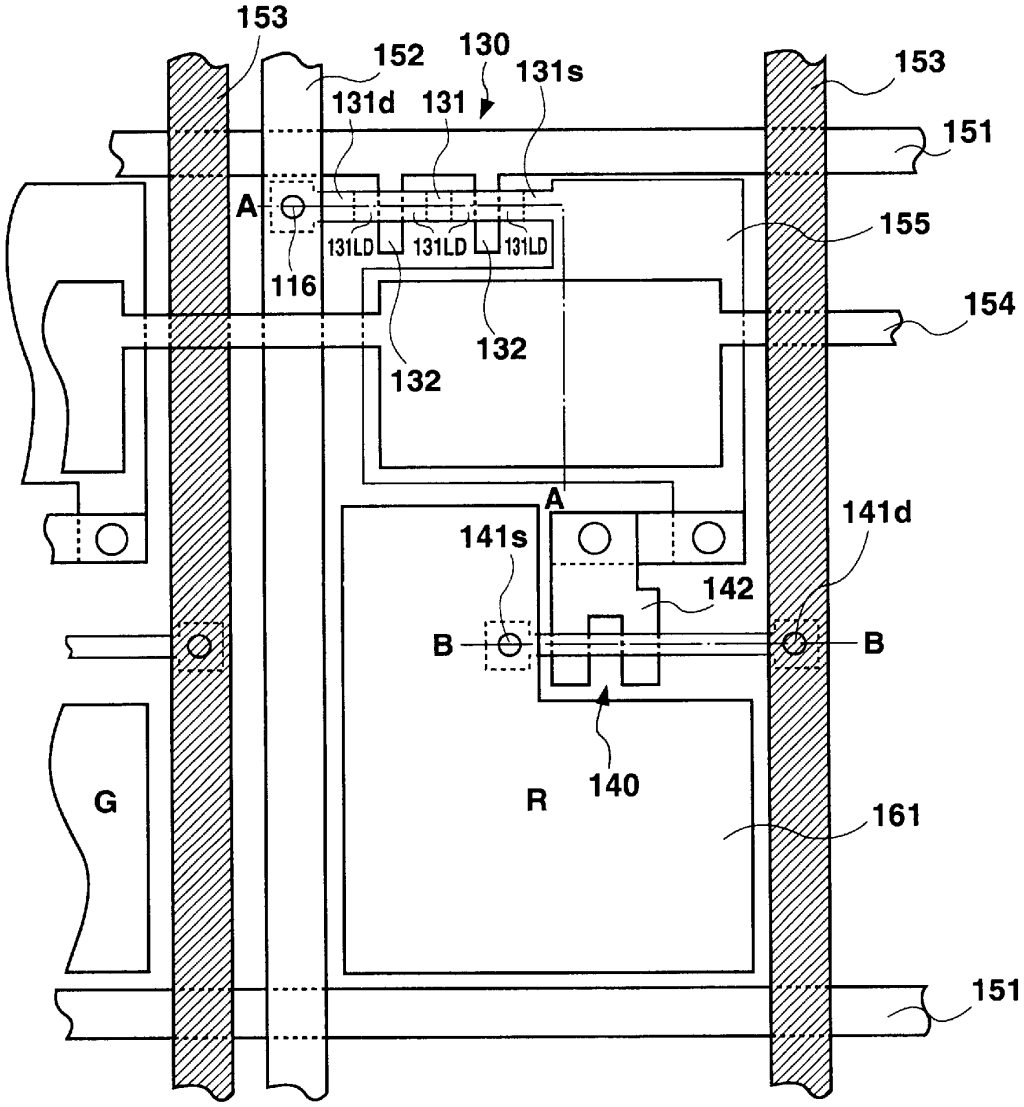

Fig. 1 RELATED ART

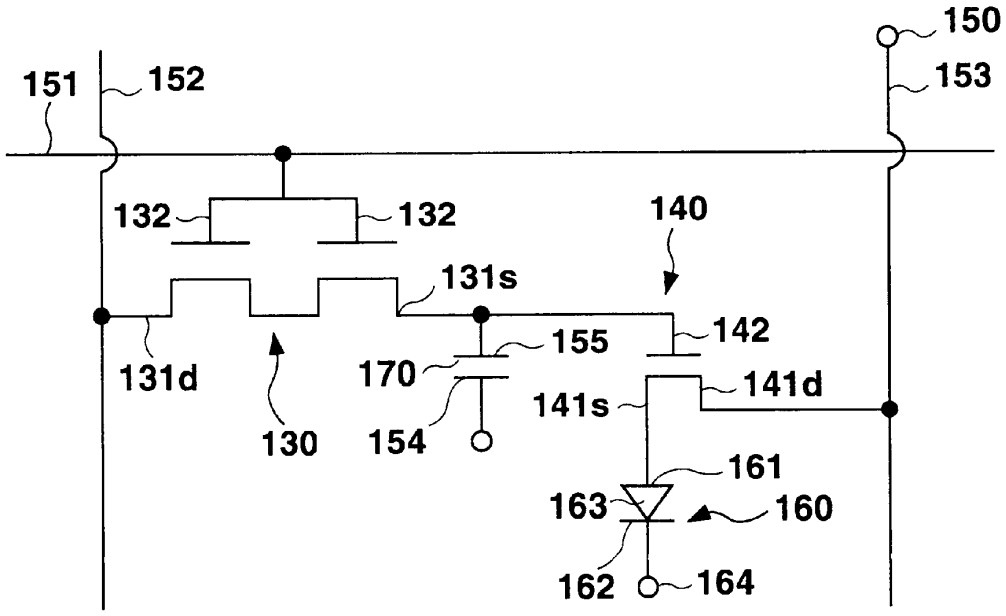

Fig. 2 RELATED ART

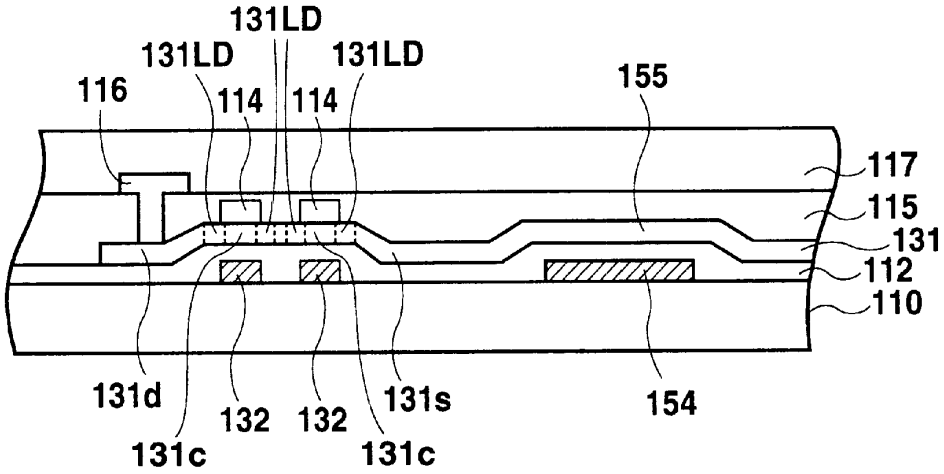

Fig. 3A RELATED ART

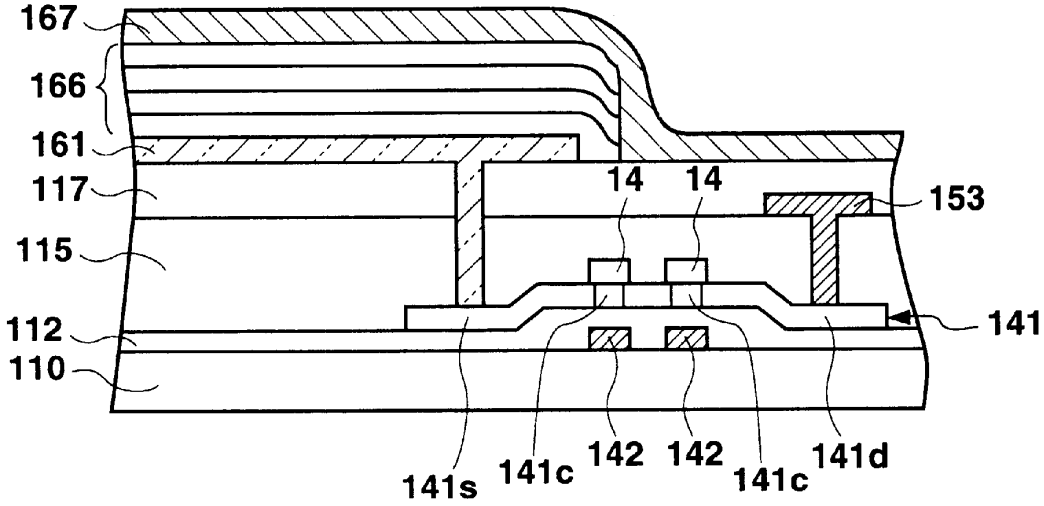

Fig. 3B RELATED ART

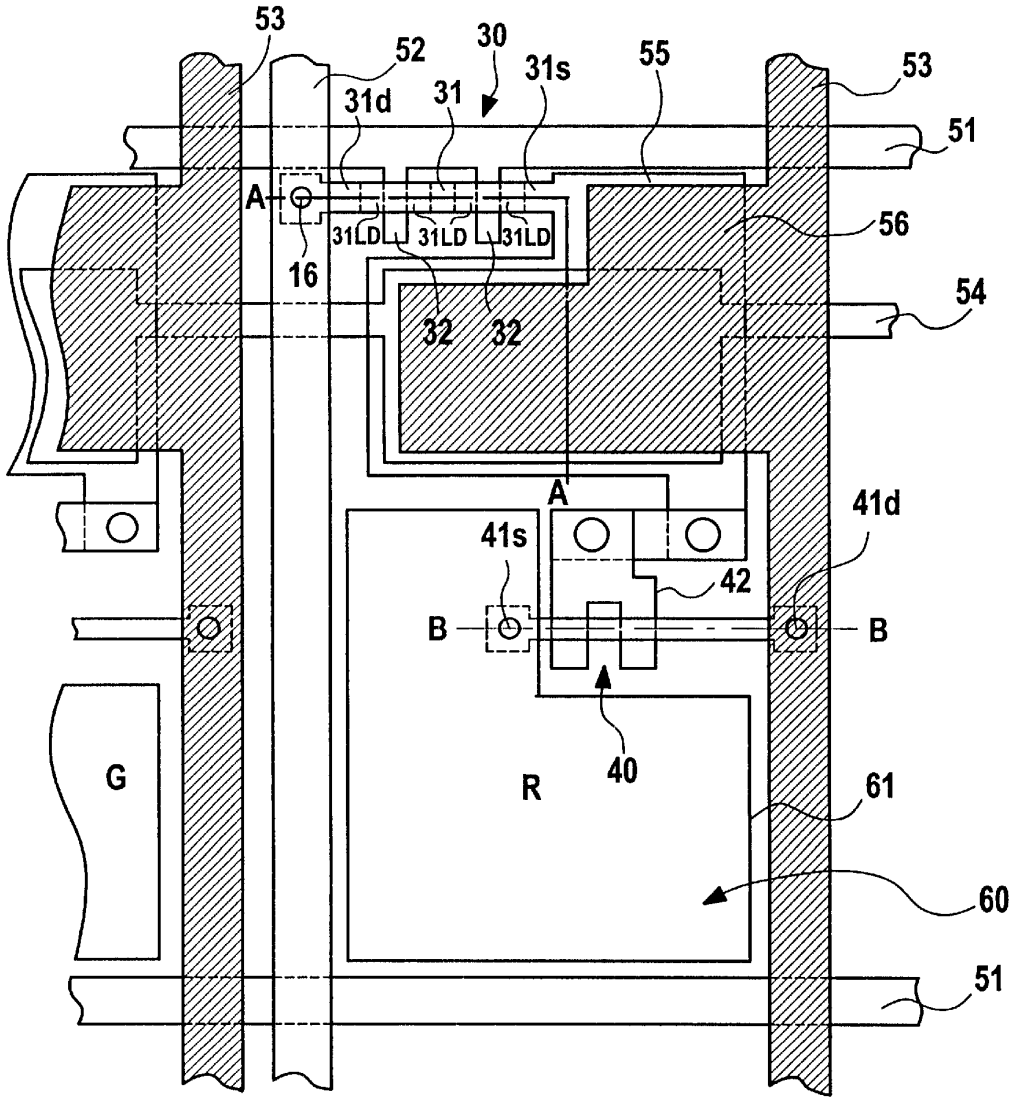
53
52
30
31s
55
53
31d
31
51
A
31LD
31LD
31LD
56
16
54
32
32
A
41d
41s
42
B
B
40
G
R
61
60
51

Fig. 4

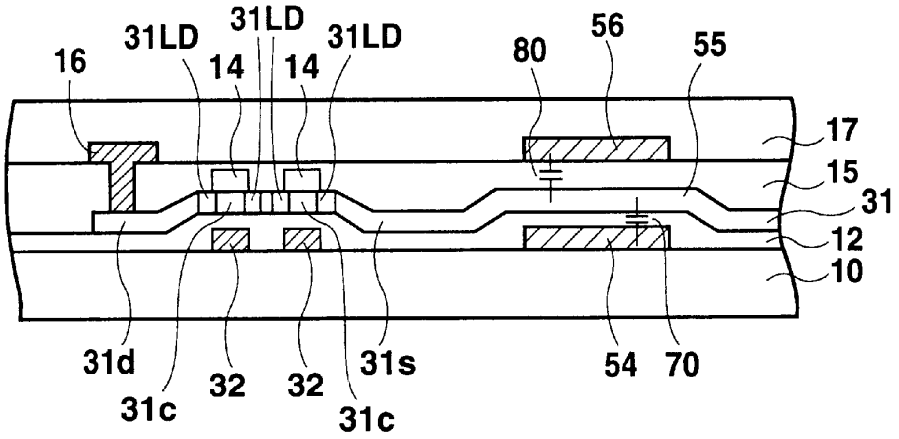
16
31LD
31LD
31LD
14
14
80
56
55
17
15
31
12
10
31d
31c
32
32
31c
31s
54
70

Fig. 5A

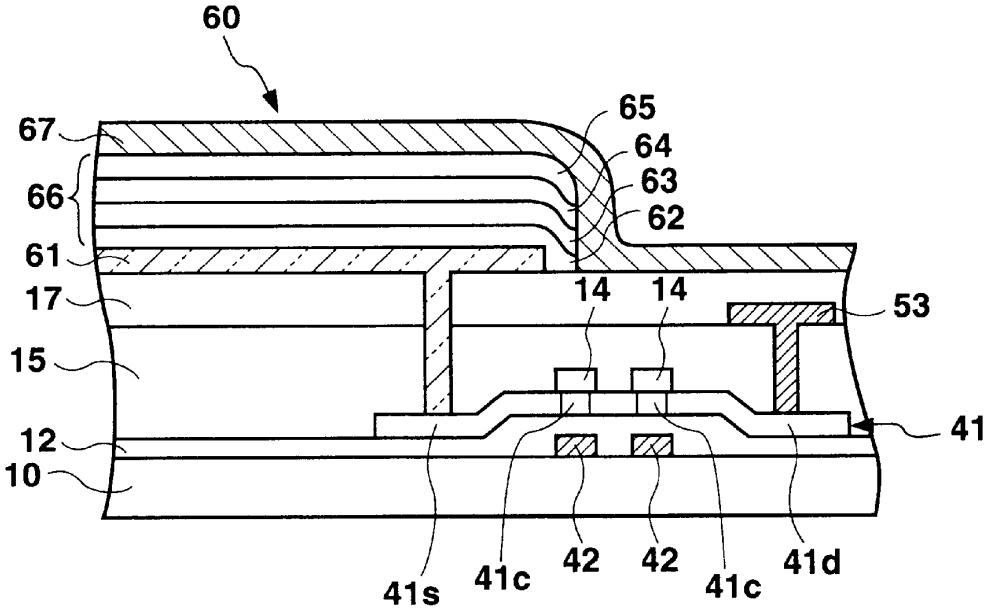
60
67
66
61
17
15
12
10
65
64
63
62
14
14
53
41
41s
41c
42
42
41c
41d

Fig. 5B

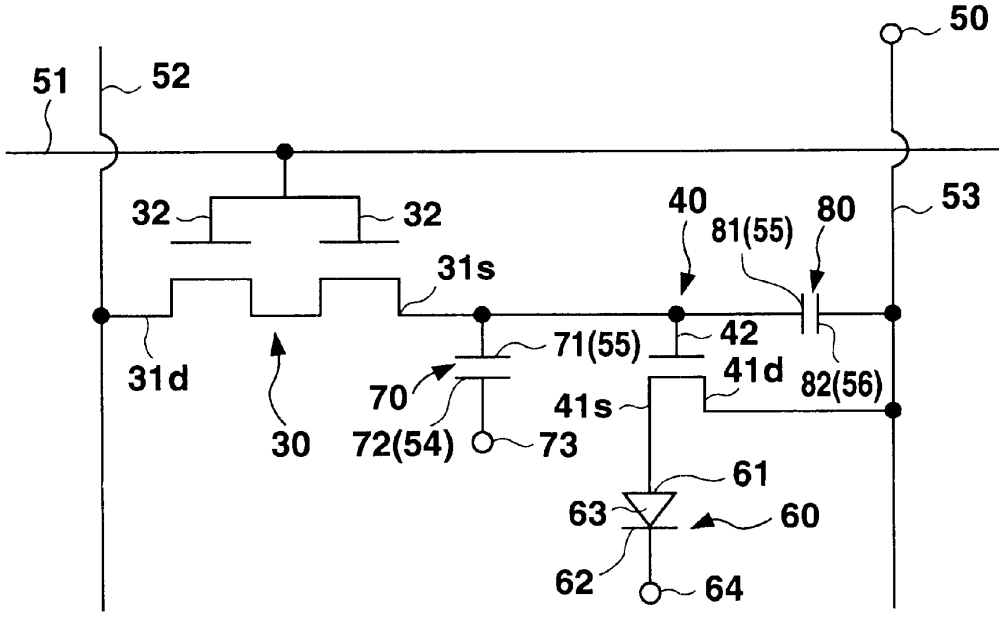
50
51
52
53
32
32
40
81(55)
80
31s
31d
30
71(55)
42
41d
82(56)
70
41s
72(54)
73
61
63
60
62
64

Fig. 6

ELECTROLUMINESCENCE DISPLAY DEVICE

BACKGROUND OF THE INVENTION

1. Field of the Invention

The present invention relates to a display device comprising an emissive element such as an electroluminescence element and thin film transistors.

2. Description of Related Art

Electroluminescence (EL) display devices using an electroluminescence element have recently attracted interest as potential replacements for devices such as CRT or LCD displays. For example, an EL display device having a thin film transistor (TFT) as a switching element for driving the EL element has been studied and developed.

FIG. **1** shows, in a plan view, one display pixel of a related organic EL display device. FIG. **2** is an equivalent circuit diagram of an organic EL display device corresponding to one display pixel. FIGS. **3**A and **3**B are cross sections taken along lines A—A and B—B in FIG. **1**, respectively.

Referring to FIGS. **1** and **2**, a display pixel is formed in a region enclosed by a gate signal line **151** and a drain signal line **152**. Around the intersection of both signal lines is formed a first TFT **130** as a switching TFT. A source **131**s of the first TFT **130** also functions as a storage capacitor electrode **155** constituting a capacitor between the source **131***s* and a storage capacitor electrode **154** which will be described later, and is connected to a gate **142** of a second TFT **140** which drives an organic EL element. A source **141***s* of the second TFT **140** is connected to an anode **161** of the organic EL element-while a drain **141***d* is connected to a power supply line **153** for driving the organic EL element.

The storage capacitor electrode **154** is disposed in parallel to the gate signal line **151** in the vicinity of the first TFT. The storage capacitor electrode **154** comprises chromium or the like and forms a capacitor **170** for accumulating charges between the storage capacitor electrode **154** and the storage capacitor electrode **155** connected to the source **131***s* of the first TFT **130** via a gate insulating film **112**. The storage capacitor **170** is provided so as to hold a voltage to be applied to the gate **142** of the second TFT **140**.

The first TFT **130**, which is a switching TFT, will now be described.

Referring to FIG. **3**A, on an insulating substrate **110** comprising a quartz glass, non-alkali glass, or the like, are provided the gate signal line **151** including gate electrodes **132** and comprising a refractory metal with a high melting point such as chromium (Cr), molybdenum (Mo), or the like, and the storage capacitor electrode **154**.

Subsequently, the gate insulating film **112**, and an active layer **131** comprising a poly-silicon (hereinafter referred to as "p-Si") film are sequentially formed, such that the active layer **131** has a so-called LDD (Lightly Doped Drain) structure. More specifically, low concentration regions **131**LD are formed at both sides of the pair of channel regions **131***c* opposing to gate electrodes **132**, and a source **131***s* and a drain **131***d* of high concentration regions are further formed to the outsides of the low concentration regions.

Further, over the entire surface covering the gate insulating film **112**, the active layer **131**, and stopper insulating films **114**, an interlayer insulating film **115** having a multi-layer structure is provided, and a metal such as Al or the like is used to fill a contact hole formed in the position in the interlayer insulating film **115** corresponding to the drain **131***d* to form a drain electrode **116**. Then, a planarization insulating layer **117** comprising an organic resin is provided on the entire surface to planarize the surface.

Next, the second TFT **140**, which is an organic EL element driving TFT, will be described.

Referring to FIG. **3**B, on the insulating substrate **110** comprising a quartz glass, non-alkali glass, or the like, the gate electrodes **142** each comprising a refractory metal (metal having a high melting point) such as Cr, Mo, or the like are formed, and the gate insulating film **112** and an active layer **141** comprising a p-Si film are sequentially formed thereon. In the active layer **141**, channels **141***c* which are intrinsic or substantially intrinsic are formed at the positions above the respective gate electrodes **142**, and the source **141***s* and the drain **141***d* are formed by doping p-type impurities at each side of the channel pair to thereby constitute a p-type channel TFT.

The interlayer insulating film **115** of a multi-layer structure is then provided over the entire surface on the gate insulating film **112** and the active layer **141**. A contact hole provided in the interlayer insulating film **115** so as to correspond to the drain **141***d* is filled with a metal such as Al to form the power supply line **153** connected to the power supply **150**. Further, the planarization insulating film **117** comprising an organic resin to planarize the surface is provided over the entire surface. On the planarization insulating film **117**, a transparent electrode, in this case the anode **161** of the organic EL element, which comprises ITO is provided to make contact with the source **141***s* via a contact hole formed at the position of the planarization insulating film **117** and the interlayer insulating film **115** corresponding to the source **141***s*.

The organic EL element **160** comprises the anode **161** comprising ITO (Indium Tin Oxide) or the like and connected to the source **141***s* of the second TFT **140**, an emissive element layer **166** comprising an organic compound, and a cathode **167** using magnesium-indium alloy, formed in that order. In the organic EL element **160**, holes injected from the anode **161** and electrons injected from the cathode **167** are recombined inside the emissive element layer **166** to excite organic molecules forming the emissive element layer **166** for causing exciton. In the process of radiation and deactivation by the exciton, the emissive element layer **166** produces light which is emitted from the transparent anode **161** through the transparent insulating substrate **110**.

As shown in FIG. **3**B, the anode **161** forms an individual pattern corresponding to each display pixel, and the emissive element layer **166** which is somewhat larger than the anode **161** is formed so as to entirely cover the anode **161**. On the other hand, the cathode **167**, which can be commonly used electrically, is formed as a common electrode.

In each pixel, charges applied from the source **131***s* of the selected first TFT **130** are accumulated and held in the storage capacitor **170** and are also applied to the gates **142** of the second TFT **140**. A current in accordance with a voltage applied to the gates **142** is applied from the power supply **150** to the organic EL element which then emits light.

In the EL display device, however, if the aperture ratio of the display pixel is small, light is irradiated from a small area of the emissive layer of the organic EL element, which results in an extremely dark display.

To cope with the foregoing disadvantage, increase of the aperture ratio may be considered. However, to increase the aperture ratio, the area of a storage capacitor which consti-

tutes the non-emissive region within a display pixel must be decreased, which leads to problems. Especially, decrease in the storage capacitor area will reduce the storage capacity, which in turn makes it impossible for only the storage capacitor **170** to sufficiently hold the drain signal supplied from the first TFT **130** until next time the first TFT **130** is selected. As a result, the gates **142** of the second TFT **140** cannot be put into a sufficient on-state to cause the organic EL element to emit light for a sufficient period to provide a bright display.

SUMMARY OF THE INVENTION

The present invention was conceived in view of the above described problems of the related art and aims to provide an EL display device which can hold sufficient charge to produce a bright display without decreasing the aperture ratio.

In accordance with one aspect of the present invention, there is provided an electroluminescence display device comprising an electroluminescence element disposed on a substrate and having first and second electrodes and an emissive layer disposed between the first and second electrodes; a first thin film transistor in which a gate electrode is connected to a gate line and a first electrode area is connected to a data line; a second thin film transistor in which a gate electrode is connected to a second electrode area of said first thin film transistor, a first electrode area is connected to a power supply to said electroluminescence element, and a second electrode area is connected to the electroluminescence element; and first and second storage capacitors, one storage capacitor electrode of each of which is connected to the second electrode area of said first thin film transistor and to the gate electrode of said second thin film transistor.

In another aspect of the present invention, there is provided an electroluminescence display device comprising an electrolumincescence element having an anode, a cathode, and an emissive layer interposed between the anode and the cathode; a first thin film transistor in which a gate electrode is connected to a gate line and a first electrode area is connected to a data line; a second thin film transistor in which a gate electrode is connected to a second electrode area of said first thin film transistor, a first electrode area is connected to a power supply for said electroluminescence element, and a second electrode area is connected to the electroluminescence element; a first storage capacitor including a first storage capacitor electrode and a second storage capacitor electrode which is connected to the second electrode area of said first thin film transistor and to the gate electrode of said second thin film transistor; and a second storage capacitor including said second storage capacitor electrode and a third storage capacitor electrode connected to a power supply line for supplying a power from said power supply to said electroluminescence element.

In accordance with still another aspect of the present invention, there is provided an light emissive display device comprising an emissive element disposed on a substrate and having first and second electrodes and an emissive layer provided between the first and second electrodes; a first thin film transistor in which a gate electrode is connected to a gate line and a first electrode area is connected to a data line; a second thin film transistor in which a gate electrode is connected to a second electrode area of said first thin film transistor, a first electrode area is connected to a power supply for said emissive element, and a second electrode area is connected to the emissive element; and first and second storage capacitors each having one storage capacitor electrode connected to the second electrode area of said first thin film transistor and to the gate electrode of said second thin film transistor.

In accordance with another aspect of the present invention, said first storage capacitor is formed by arranging the first storage capacitor electrode and the second storage capacitor electrode connected to the second electrode area of the first thin film transistor and to the gate electrode of the second thin film transistor such that they are opposed to each other via an insulating layer, and said second storage capacitor is formed by arranging said second storage capacitor electrode and the third storage capacitor electrode such that they are opposed to each other via an insulating layer.

In accordance with another aspect of the present invention, said first and second storage capacitor share one electrode connected to both the second electrode area of said first thin film transistor and to the gate electrode of the second thin film transistor.

In accordance with another aspect of the present invention, said first storage capacitor is formed by arranging the first storage capacitor electrode and the second storage capacitor electrode connected to the second electrode area of the first thin film transistor and to the gate electrode of the second thin film transistor such that they are opposed to each other via an insulating layer, and said second storage capacitor is disposed so as to superpose said first storage capacitor and is formed by arranging said second storage capacitor electrode and the third storage capacitor electrode such that they are opposed to each other via an insulating layer.

The first and second storage capacitors as described above can easily increase the capacity of each pixel without reducing the aperture ratio and can securely hold a voltage applied to the gate electrode of the second thin film transistor for a sufficient period. As a result, a desired power (e.g. current) can be securely supplied from the power supply to the emissive element, such as an organic EL element, via the second thin film to thereby implement a display device providing bright display with high image quality.

In accordance with another aspect of the present invention, the other storage capacitor electrode of said second storage capacitor or the third storage capacitor electrode is integrally formed with the power supply line for supplying a power from said power supply to the first electrode area of the second thin film transistor from said power supply.

In accordance with still another aspect of the present invention, a predetermined direct current voltage is applied to the first storage capacitor electrode.

By thus forming the other storage capacitor electrode of the second storage capacitor to be integrally formed with the power supply line, it is possible to accurately dispose said other storage capacitor electrode at a predetermined position, for example, a position superimposing the first storage capacitor, only with a change in the pattern of the power supply line. This eliminates any need for extra processes for forming the second storage capacitor, and improved display quality can be obtained without raising the manufacturing cost.

In accordance with still another aspect of the present invention, the emissive layer may use an organic compound. An emissive layer using an organic compound is very advantageous in a color display device because of the possible variations of emissive colors and a wide selection of possible materials.

BRIEF DESCRIPTION OF THE DRAWINGS

These and other objects of the invention will be explained in the description below, in connection with the accompanying drawings, in which:

FIG. **1** is a plan view of a related EL display device;

FIG. **2** is an equivalent circuit diagram of a related EL display device.

FIGS. **3**A and **3**B are cross sections of the EL display device taken along lines A—A and B—B in FIG. **1**, respectively;

FIG. **4** is a plan view of an EL display device according to the present invention;

FIGS. **5**A and **5**B are cross sections of the EL display device taken along lines A—A and B—B in FIG. **4**, respectively; and

FIG. **6** is an equivalent circuit diagram of an EL display device according to the present invention.

DETAILED DESCRIPTION OF THE PREFERRED EMBODIMENT

A preferred embodiment of the present invention will be described in further detail with reference to the accompanying drawings.

FIG. **4** shows, in a plan view, one display pixel when the present invention is applied to an organic EL display device, and FIGS. **5**A and **5**B are cross sections taken along lines A—A and B—B in FIG. **4**, respectively. FIG. **6** shows an equivalent circuit diagram of the organic EL display device.

According to this embodiment, first and second TFTs **30** and **40** are so-called bottom gate type TFTs in which a gate electrode is disposed under an active layer **31** or **41**, and in each TFT a p-Si film is used as the active layer and gate electrodes **32**, **42** have a double gate structure.

Referring to FIGS. **4**, **5**A and **5**B, a display pixel is formed in a region enclosed by a gate signal line **51** and a drain signal line **52**. Around the intersection of both signal lines is formed the first TFT **30** whose source (a second electrode region) **31***s* also functions as a storage capacitor electrode **55** constituting a capacitor **70** between the source **31***s* and a storage capacitor electrode **54** and is connected to the gates **42** of the second TFT **40**. A source (a second electrode region) **41***s* of the second TFT **40** is connected to an anode **61** of an organic EL element **60** while a drain **41***d* is connected to a power supply line **53** for driving the organic EL element **60**.

The first storage capacitor electrode line **54** is disposed in parallel to the gate signal line **51** in the vicinity of the first TFT. The storage capacitor electrode **54** comprising chromium or the like is arranged so as to oppose, via a gate insulating film **12**, the second storage capacitor electrode **55** of a p-Si film connected to the source **31***s* of the first TFT **30**, thereby forming between these capacitor electrodes a first storage capacitor **70** for accumulating charges.

Further, a third storage capacitor electrode **56** is disposed in a corresponding pixel region so as to be opposed via an interlayer insulating film **15** to the second storage capacitor electrode **55** of a p-Si film which is connected to the source **31***s* of the first TFT **30**, thereby forming between these capacitor electrodes a second storage capacitor **80** for accumulating charges.

The first and second storage capacitors **70** and **80** thus formed function such that they together hold a voltage applied to the gate electrodes **42** of the second TFT **40**.

Referring to FIG. **6**, one electrode **71**, **81** of the first and second storage capacitors **70** and **80**, namely the second storage capacitor electrode **55** in FIGS. **4** and **5**A, is connected to the source **31**s of the first TFT **30**. The other electrode **72** of the first storage capacitor **70**, namely the first storage capacitor electrode **54**, is connected to first storage capacitor electrodes **54** provided in adjacent display pixels to be thereby connected to a common electrode **73** to which a constant potential is applied. On the other hand, the other electrode **82** of the second storage capacitor **80**, namely the third storage capacitor electrode **56**, is connected to the power supply line **53** connected to the power supply **50** of the organic EL element **60**.

A plurality of display pixels each comprising the organic EL element **60** and TFTs **30** and **40** are arranged in a matrix on the substrate **10**, thus forming an organic EL display device.

As shown in FIGS. **5**A and **5**B, the organic EL display device comprises the TFTs and the organic EL element sequentially formed on a substrate **10** comprising glass, synthetic resin, or the like, or a substrate **10** obtained by forming an insulating film such as a SiO_2 film, a SiN film, or the like on a conductive substrate or a semiconductor substrate or the like.

Referring back to FIGS. **4** and **5**A, the first TFT **30**, which is a switching TFT, comprises, on an insulating substrate **10** comprising a quartz glass, non-alkali glass, or the like, the gate signal line **51** including the gate electrodes **32** and comprising a metal with a high melting point such as Cr, Mo, or the like, the drain signal line **52** comprising Al and including the drain electrode **16**, and the power supply line **53** functioning as the power supply of the organic EL element and comprising Al. The first storage capacitor electrode **54** comprising a refractory metal with a high melting point such as Cr, Mo, or the like, is further provided in the same layer as the gate electrodes.

Subsequent to formation of the gate signal line **51** (the gate electrodes **32**) and the first storage capacitor electrode **54** on the substrate **10**, a gate insulating film **12**, and an active layer **31** comprising a p-Si film are sequentially formed. On the active layer **31** at the positions above the respective gate electrodes **32**, stopper insulating films **14** comprising SiO_2 are provided so as to function as masks covering channels **31***c* for preventing ions from entering when ions are doped therein for forming the source **31***s* and the drain **31***d*. The active layer **31** of the first TFT **30** has a so-called LDD structure. Specifically, low concentration regions **31**LD are provided at each side of a pair of the channels **31***c* facing the respective gates **32**, and a source **31***s* and a drain **31***d* which are high concentration regions are further provided to the outsides of the low concentration regions. The p-Si film constituting the active layer extends to the region above the first storage capacitor electrode **54** so as to function as the second storage capacitor electrode **55**, thereby forming the first storage capacitor **70** with the first storage capacitor electrode **54** via the gate insulating film **12** as already described.

Further, over the entire surface covering the gate insulating film **12**, the active layer **31**, and the stopper insulating films **14**, an interlayer insulating film **15** is formed by sequentially accumulating a SiO_2 film, a SiN film and a SiO_2 film, and a metal such as Al or the like is used to fill a contact hole formed in the position in the interlayer insulating film **15** corresponding to the drain **31***d* to thereby form a drain electrode **16**. Then, a planarization insulating layer **17** comprising an organic resin is further provided over the entire surface for surface planarization.

Next, the second TFT **40**, which is an organic EL element driving TFT, will be described.

Referring to FIG. **5**B, on the insulating substrate **10** comprising a quartz glass, non-alkali glass, or the like, the gate electrodes **42** each comprising a refractory metal (metal

having a high melting point) such as Cr, Mo, or the like are formed, and a gate insulating film **12** and an active layer **41** comprising a p-Si film are sequentially formed.

In the active layer **41**, channels **41***c* which are intrinsic or substantially intrinsic are formed at the positions above the respective gate electrodes **42**. Regions at each side of the channel pair are covered with resists and subjected to ion doping with p-type impurities, for example boron(B), to thereby form a source **41***s* and a drain **41***d*, respectively.

The interlayer insulating film **15** is formed by sequentially accumulating a SiO_2 film, a SiN film and a SiO_2 film over the entire surface of the gate insulating film **12** and the active layer **41**, and a contact hole in the interlayer insulating film **15** which is formed so as to correspond to the drain **41***d* (a first electrode region) is filled with a metal such as Al to form the power supply line **53** connected to the power supply **50**. Further, the planarization insulating film **17** comprising an organic resin to planarize the surface is provided over the entire surface. On the planarization insulating film **17** is provided a transparent electrode, in this example the anode **61** of the organic EL element, which comprises ITO and makes contact with the source **41***s* via a contact hole formed at the position in the planarization insulating film **17** and in the interlayer insulating film **15** corresponding to the source **41***s*.

The organic EL element **60** is constituted such that the emissive element layer **66** is formed between the anode **61** and the cathode **67**, and in this embodiment, the anode **61**, the emissive element layer **66**, and the cathode **67** are sequentially formed on the planarization insulating film **17**, as shown in FIG. **5**B. Further, according to this embodiment, the emissive element layer **66** which comprises an organic compound, is constituted such that a first hole-transport layer **62**, a second hole-transport layer **63**, an emissive layer **64** and an electron-transport layer **65** are formed in that order.

The anode **61** comprises a transparent electrode of ITO as already described. The first hole-transport layer **62** comprises MTDATA (4,4',4"-tris (3methylphenylphenylamino) triphenylamine), the second hole-transport layer **63** comprises TPD (N,N'-diphenyl-N,N'-di(3methylphenyl)-1,1'-biphenyl-4,4'-diamine), the emissive layer **64** comprises quinacridone derivative and $Bebq_2$ (bis(10-hydroxybenzo [h] quinolinato berylliuim), the electron-transport layer **65** comprises $Bebq_2$, and the cathode **67** comprises magnesium-indium alloy. The cathode **67** is formed as a common electrode to cover the entire region or at least the display region of the substrate **10** on which the organic EL display device is formed. It is to be understood that structures and materials other than those described above may be used for the organic EL element **60**.

The organic EL element **60** thus configured receives current supplied from the power supply **50** by operation of the first TFT **30**, the first and second storage capacitors **70** and **80**, and the second TFT **40**, so that holes injected from the anode **61** and electrons injected from the cathode **67** are recombined inside the emissive layer **64** to excite organic molecules therein, thereby causing exciton. In the process of radiation and deactivation by the exciton, the emissive layer **64** produces light which is emitted from the transparent anode **61** through the transparent insulating substrate **10**.

As described above, according to this embodiment, the first and second storage capacitors **70** and **80** are provided between the source **31***s* of the first TFT **30** and the gates of the second TFT **40**, which are elements for constituting one pixel. The first storage capacitor **70** is formed by the first storage capacitor electrode **54** and the second storage capacitor electrode **55** which are opposed to each other via the gate insulating film **12**, while the second storage capacitor **80** is formed by the electrode **55**, which is one electrode of said first storage capacitor **70**, and the third storage capacitor electrode **56** which oppose each other via the planarization insulating film **17**. As shown in FIG. **4**, the third storage capacitor electrode **56** is disposed so as to superimpose the second storage capacitor electrode **55** in the region where the first and second capacitor electrodes **54** and **55** face each other. Therefore, formation of the second storage capacitor **80** in addition to the first storage capacitor **70** will not cause reduction in the aperture ratio, and the storing capacity in one pixel can be increased without reducing the aperture ratio of the display device. Namely, the storing capacity in one pixel can be increased without enlarging the area of the storage capacitor electrode in the plane direction, and therefore a voltage to be applied to the gate electrodes **42** of the second TFT **40** in accordance with display contents can be held for a sufficient period before being applied to the gate electrodes **42**. Thus, sufficient current can be applied from the power supply **50** via the power supply line **53** and the second TFT **40** to the organic EL element **60**, which then emits light with luminance according to the supplied current, and only when a current is applied, thereby achieving a bright and accurate display.

Further, as is apparent from FIG. **4**, the third storage capacitor electrode **56** is integrally formed with the power supply line **53**. This eliminates a need for extra processes for forming the third storage capacitor electrode **56**, namely the second storage capacitor **80**, and therefore its inclusion causes no cost increase.

It is to be understood that according to the present invention, both in an n-type TFT (the first TFT **30**) and a p-type TFT (the second TFT **40**), the drain is an electrode from which a current flows into the TFT whereas the source is an electrode from which a current flows out.

Although the above description of the preferred embodiment described an example wherein the gate electrodes **32**, **42** have a double-gate structure, the present invention is not limited to such a configuration and can achieve the same effects if a single-gate structure or a multi-gate structure comprising three or more gates is adopted.

Further, although in the above example the second TFT is a p-type channel TFT, the second TFT may be an n-type channel TFT.

Although a p-Si film is used as an active layer in the above example, a microcrystal silicon film or an amorphous silicon film may also be used.

Of the elements constituting each pixel, including the gate electrodes, the gate insulating layer, the active layer or the like of the first and second TFTs **30** and **40**, the interlayer insulating film **15**, the planarization insulating film **17**, or the like, common elements are preferably formed in the same manufacturing process in view of reduction of variance in the characteristics of the TFTs or the like. The active layers for respective TFTs can be formed in the same process when a p-Si film is used as in the above example. For example, a polysilicon layer obtained by applying policrystalization process such as laser annealing to an amorphous silicon film formed on the entire surface of a substrate, may be used as the active layer of the first and the second TFTs **30** and **40**.

Further, although the description of the above embodiment featured an organic EL display device, the present invention is not limited thereto and can provide similar effects when applied to an inorganic EL display device

having an inorganic EL element using an emissive layer comprising an inorganic material in place of the organic EL element, a vacuum fluorescent display (VFD) comprising as an emissive layer a fluorescent layer between two electrodes, or the like.

While the preferred embodiment of the present invention has been described using specific terms, such description is for illustrative purposes only, and it is to be understood that changes and variations may be made without departing from the spirit or scope of the appended claims.

What is claimed is:

1. An electroluminescence display device comprising:

an electroluminescence element disposed on a substrate and having first and second electrodes and an emissive layer disposed between the first and second electrodes;

a first thin film transistor in which a gate electrode is connected to a gate line and a first electrode is connected to a data line;

a second thin film transistor in which a gate electrode is connected to a second electrode of said first thin film transistor, a first electrode is connected to a power supply to said electroluminescence element, and a second electrode is connected to the electroluminescence element; and

first and second storage capacitors, one storage capacitor electrode of each of which is connected to the second electrode of said first thin film transistor and to the gate electrode of said second thin film transistor.

2. The electroluminescence display device of claim **1**, wherein

said first storage capacitor is formed by arranging a first storage capacitor electrode and a second storage capacitor electrode which is connected to the second electrode of the first thin film transistor and to the gate electrode of the second thin film transistor such that they are opposed to each other via an insulating layer, and

said second storage capacitor is formed by arranging said second storage capacitor electrode and a third storage capacitor electrode such that they are opposed to each other via an insulating layer.

3. The electroluminescence display device of claim **1**, wherein, said first and second storage capacitors share one electrode connected to both the second electrode of said first thin film transistor and the gate electrode of the second thin film transistor.

4. The electroluminescence display device of claim **1**, wherein,

said first storage capacitor is formed by arranging the first storage capacitor electrode and the second storage capacitor electrode connected to the second electrode of the first thin film transistor and to the gate electrode of the second thin film transistor such that they are opposed to each other via an insulating layer, and

said second storage capacitor is disposed so as to superpose said first storage capacitor and is formed by arranging said second storage capacitor electrode and the third storage capacitor electrode such that they are opposed to each other via an insulating layer.

5. The electroluminescence display device of claim **1**, wherein

the second storage capacitor electrode of said second storage capacitor is integrally formed with a power supply line for supplying a power from said power supply to the first electrode of the second thin film transistor.

6. An electroluminescence display device comprising:

an electroluminescence element having an anode, a cathode, and an emissive layer interposed between the anode and the cathode;

a first thin film transistor in which a gate electrode is connected to a gate line and a first electrode is connected to a data line;

a second thin film transistor in which a gate electrode is connected to a second electrode of said first thin film transistor, a first electrode is connected to a power supply for said electroluminescence element, and a second electrode is connected to the electroluminescence element;

a first storage capacitor including a first storage capacitor electrode and a second storage capacitor electrode which is connected to the second electrode of said first thin film transistor and to the gate electrode of said second thin film transistor; and

a second storage capacitor including said second storage capacitor electrode and a third storage capacitor electrode connected to a power supply line for supplying a power from said power supply to said electroluminescence element.

7. The electroluminescence display device of claim **6**, wherein

the third storage capacitor electrode is integrally formed with the power supply line for supplying a power from said power supply to the first electrode of the second thin film transistor.

8. The electroluminescence display device of claim **6**, wherein

a predetermined direct current voltage is applied to the first storage capacitor electrode.

9. A light emissive display device comprising:

an emissive element disposed on a substrate and having first and second electrodes and an emissive layer provided between the first and second electrodes;

a first thin film transistor in which a gate electrode is connected to a gate line and a first electrode is connected to a data line;

a second thin film transistor in which a gate electrode is connected to a second electrode of said first thin film transistor, a first electrode is connected to a power supply for said emissive element, and a second electrode is connected to the emissive element; and

first and second storage capacitors each having one storage capacitor electrode connected to the second electrode of said first thin film transistor and to the gate electrode of said second thin film transistor.

10. The light emissive display device of claim **9**, wherein

said first storage capacitor is formed by arranging a first storage capacitor electrode and a second storage capacitor electrode which is connected to the second electrode of the first thin film transistor and to the gate electrode of the second thin film transistor such that they are opposed to each other via an insulating layer, and

said second storage capacitor is formed by arranging said second storage capacitor electrode and a third storage capacitor electrode such that they are opposed to each other via an insulating layer.

11. The light emissive display device of claim **9**, wherein, said first and second storage capacitors share one electrode connected to both the second electrode of said first thin film transistor and to the gate electrode of the second thin film transistor.

12. The light emissive display device of claim **9**, wherein,

said first storage capacitor is formed by arranging the first storage capacitor electrode and the second storage capacitor electrode connected to the second electrode of the first thin film transistor and to the gate electrode of the second thin film transistor such that they are opposed to each other via an insulating layer, and

said second storage capacitor is disposed so as to superpose said first storage capacitor and is formed by arranging said second storage capacitor electrode and the third storage capacitor electrode such that they are opposed to each other via an insulating layer.

13. The light emissive display device of claim **9**, wherein

the second storage capacitor electrode of said second storage capacitor is integrally formed with the power supply line for supplying a power from said power supply to the first electrode of the second thin film transistor.

14. The light emissive display device of claim **9**, wherein said emissive layer comprises an organic compound as an emissive material.

* * * * *