UNITED STATES PATENT AND TRADEMARK OFFICE

BEFORE THE PATENT TRIAL AND APPEAL BOARD

BOE TECHNOLOGY GROUP CO., LTD.,
Petitioner

v.

OPTRONIC SCIENCES LLC,
Patent Owner

IPR2024-01133
Patent 9,263,509

DECLARATION OF ERIC BRETSCHNEIDER, PH.D.

TABLE OF CONTENTS

I. INTRODUCTION 1

II. BACKGROUND AND QUALIFICATIONS 3

III. THE ’509 PATENT 10

IV. SUMMARY OF THE ALLEGED PRIOR ART 12

A. Overview of Weaver 12

B. Overview of Lee053 14

C. Overview of Song 15

D. Overview of Lee149 16

E. Overview of Bae 17

F. Overview of Gupta 19

G. Overview of Han 20

V. THE LEVEL OF ORDINARY SKILL IN THE ART 23

A. Dr. Baker is Not a POSITA 26

VI. APPLICABLE LEGAL STANDARDS 29

A. Burden of Proof 29

B. Date of Invention 29

C. Anticipation 29

D. Obviousness 30

E. Claim Construction 33

F. Section 112(f) Means Plus Function 35

G. Section 112 Definiteness 36

VII. CLAIM CONSTRUCTION 37

A. “auxiliary” (claims 1-2, 5-6, 10-11, 13) 37

B. "electrode" (claims 1-2, 5-6, 10-11, 13) 41

VIII. Hindsight 42

IX. Challenge 1: The Petition's Anticipation Theory Based on Weaver Fails to Disclose All Elements of Claims 1-5, 9, and 12-13 48

A. Weaver Does Not Anticipate an "Auxiliary Electrode" 48

X. CHALLENGE 2: THE PETITION'S OBVIOUSNESS THEORY BASED ON WEAVER AND LEE053 (CLAIMS 6-8) 53

A. Lee053 Does Not Cure The Deficiencies of Weaver 53

B. No Motivation To Combine Weaver and Lee053 53

XI. CHALLENGE 3: THE PETITION'S OBVIOUSNESS THEORY BASED ON WEAVER AND SONG (CLAIMS 6-8) 55

A. Song Does Not Cure the Deficiencies of Weaver 55

B. No Motivation To Combine Weaver and Song 55

XII. CHALLENGE 4: THE PETITION'S OBVIOUSNESS THEORY BASED ON WEAVER AND LEE 149 (CLAIMS 10-11) 59

A. Lee149 Does Not Cure the Deficiencies of Weaver 59

B. No Motivation to Combine 59

XIII. CHALLENGE 5: THE PETITION'S OBVIOUSNESS THEORY BASED ON WEAVER AND BAE (CLAIMS 10-11) 62

A. Bae Does Not Cure the Deficiencies of Weaver 62

B. No Motivation to Combine 63

XIV. CHALLENGE 6: THE PETITION'S OBVIOUSNESS THEORY BASED ON WEAVER AND GUPTA OR HAN (CLAIMS 1-5, 9, AND 12-13) 64

A. Still Lacking Auxiliary Electrode 64

B. No Motivation to Combine 65

C. Han Is Not Analogous Art, and Gupta's Resistor is Not an Electrode 68

XV. CHALLENGE 7: THE PETITION'S OBVIOUSNESS THEORY BASED ON WEAVER AND LEE053, AND GUPTA OR (CLAIMS 6-8) 72

XVI. CHALLENGE 8: THE PETITION'S OBVIOUSNESS THEORY BASED ON WEAVER AND SONG, AND GUPTA OR HAN (CLAIMS 6-8) 72

XVII. CHALLENGE 9: THE PETITION'S OBVIOUSNESS THEORY BASED ON WEAVER AND LEE149, AND GUPTA OR HAN FAILS TO DISCLOSE ALL ELEMENTS OF CLAIMS 10-11 72

XVIII. CHALLENGE 10: THE PETITION'S OBVIOUSNESS THEORY BASED ON WEAVER AND BAE, AND GUPTA OR HAN (CLAIMS 10-11) 72

XIX. HINDSIGHT-FREE MODIFICATION TO WEAVER 73

XX. CONCLUSION 75

1. I, Eric Bretschneider, declare as follows:

I. INTRODUCTION

2. I have been retained by counsel for Patent Owner Optronic Sciences LLC in this proceeding. My credentials are described in my curriculum vitae, which is Exhibit 2027. I offer this report in response to the Petition for *Inter Partes* Review, Case No. 2024-01133 regarding U.S. Patent No. 9,263,509 (the "'509 Patent"), filed by Petitioner Boe Technology Group Co., Ltd.

3. I have been asked by Patent Owner's counsel to offer technical opinions relating to the '509 Patent, the alleged prior art, and the arguments and opinions presented by Petitioner and its expert, Dr. R. Jacob Baker.

4. I am being compensated at my standard consulting rate of $500 an hour, plus out-of-pocket expenses. My compensation does not depend on the testimony that I express in this Declaration, or on the outcome of these cases.

5. I have reviewed the papers and exhibits filed in this proceeding as of the date my declaration is signed. I understand that Petition challenged the patentability of claims 1–13 of the '509 Patent (the "Challenged Claims"). Specifically, the Petition sets forth the following challenges:

Ground	Claims	Stat. Basis	Prior Art
1	1-5, 9, 12-13	35 U.S.C. § 102	Weaver
2	6-8	35 U.S.C. § 103	Weaver and Lee053
3	6-8	35 U.S.C. § 103	Weaver and Song
4	10-11	35 U.S.C. § 103	Weaver and Lee149
5	10-11	35 U.S.C. § 103	Weaver and Bae
6	1-5, 9, 12-13	35 U.S.C. § 103	Weaver in view of Gupta or Han
7	6-8	35 U.S.C. § 103	Weaver and Lee053, in view of Gupta or Han
8	6-8	35 U.S.C. § 103	Weaver and Song, in view of Gupta or Han
9	10-11	35 U.S.C. § 103	Weaver and Lee149, in view of Gupta or Han
10	10-11	35 U.S.C. § 103	Weaver and Bae, in view of Gupta or Han

6. I understand that Patent Owner filed a Preliminary Response. In its Institution Decision, I understand that the Board decided to institute proceedings on grounds 1–10. Thus, I understand that the "Challenged Claims" that remain in this case are claims 1–13.

7. In my opinion the Challenged Claims 1–13 are not anticipated or rendered obvious by any of the applied references or combination thereof.

8. After performing the analysis described herein and applying the standard outlined below, in my opinion, none of the authorized grounds provide a basis for concluding that any of the claims of the '509 Patent should be found invalid.

My opinions are based on the record evidence, my knowledge and experience in the field, and my opinion as to the level of ordinary skill in the art.

II. BACKGROUND AND QUALIFICATIONS

9. My complete qualifications and professional experience are described in my Curriculum Vitae, a copy of which is attached as Exhibit 2027.

10. I have over 30 years of experience with LEDs, displays, lighting fixtures, and lighting including a comprehensive background in a full range of LED technologies, including solid state lighting (SSL) fixture/lamp design, integration, and reliability, LED chip and package testing and reliability, fabrication, optical design, thermal management, and color conversion.

11. Throughout the course of my career, I have designed and transferred into manufacturing over 150 different LED-based lighting products, including LED lighting products designed to be installed in fixtures and in different lighting environments and applications. I have also designed and transferred into manufacturing dozens of different LED chips and packages for a variety of different applications with a particular focus on display applications and general lighting.

12. I am recognized as a leading expert in matters related to reliability for all types of LED technology and have consulted with numerous companies to help develop internal testing methods and reliability standards for evaluating their products.

13. I am currently the Chief Technology Officer at EB Designs & Technology. In that capacity, I am, among other things, responsible for the design of solid-state lighting technologies for clients ranging from startups to Fortune 100 companies.

14. I also served as a member of the University of Florida's Department of Chemical Engineering Advisory Board for 25 years, from 1998 until 2022. During my tenure on this Advisory Board, I served as Chair for a total of 8 years. I also served on the Dean's Advisory board for the College of Engineering at the University of Florida from 2007-2009 and 2017-2022. I have been a Conference Chair for LED Measurement and Standards. I am also a member of numerous professional societies, including the International Society for Optics and Photonics (SPIE), Optica, the Society for Information Display (SID), the Materials Research Society (MRS), and the Illuminating Engineering Society (IES).

15. Inside the IES, I am a founding member of the Science Advisory Panel, which has oversight over all testing and technical committees and work groups inside the IES. I am also a full member of the Test Procedures Committee which develops test, measurement and reliability standards for LEDs and lighting fixtures. Inside the Test Procedures Committee, I serve as chair of the projections and reliability subcommittee which develops reliability standards for LED based lighting products including utilizing all forms of lighting technologies. I recently led the

work group that revised TM-21 which is the internationally accepted standard for predicting reliability of LED packages. I also developed a new mathematical model that, for the first time, allows prediction of the color shift of an LED package over its time. This model is the basis for a new IES standard known as TM-35, which predicts the rate of color shift for LED products over time.

16. I joined the IES in 2006 and have been a member of the Test Procedures Committee since that time. As a result, I have been an active participant in the development of testing standards related and have helped to formalize the terminology for solid state lighting since the beginnings of the industry. Additionally, I serve on the IES Color Committee and the IES Photobiology Committee.

17. I previously served as Chief Technology Officer at QuarkStar, LLC., from 2016 until 2023. QuarkStar is primarily a technology development company that is focused on new approaches to improving performance and efficiency of products that rely on LED light sources. In this role, I helped negotiate the company's first technology license to a European manufacturer of lighting fixtures. This technology has since be incorporated into one of their premium product lines. I also lead the efforts to transition products into manufacturing to produce fixtures for the Museum of Fine Arts, Houston (MFAH). These fixtures provide over 60% of the artificial lighting in a $500 million expansion.

18. Prior to my position at EB Designs & Technology, I served as the Director of Engineering at HeathCo, LLC. In that capacity, I was responsible for advanced technology/product development related to solid-state lighting, sensors, notifications, and control products.

19. Prior to my position as Director of Engineering at HeathCo, I was at the Elec-Tech International Co., Ltd., where I held the positions of Chief Engineer, ETi Lighting Research Institute and VP of Research and Development, ETi Solid State Lighting. In my Elec-Tech capacities, my responsibilities included developing all technology and product roadmaps for markets in North America, China, Europe, and Japan. I designed and developed LEDs, LED packages and LED based lighting products for all of these markets.

20. Between 2008 and 2011, I was at Lighting Science Group Corporation (LSG), first as a product development manager, and my responsibilities included developing solid state lighting products, then as VP of Research, and my responsibilities included developing advanced LED models for product development and production control. In these roles, I was involved in the design and manufacture of numerous LED-based lighting fixtures and products. The products I helped launch included LSG's C2D (Curb to Door) products. These products were designed to be installed in outdoor locations including wall packs, parking lots, and

streetlights. These fixtures, particularly the wall pack fixtures, were also suitable for installation in public transportation areas.

21. Between 2004 and 2008, I was at Toyoda Gosei North America, where I was a sales manager, and my responsibilities included managing and developing LED die and package sales accounts form the eastern region of North America. I was also tasked with providing technical support for the entire western hemisphere. The support I provided included design of LED packages and design of lighting fixtures and products that incorporated LED packages. Notable successes at Toyoda Gosei included expanding market niches and applications for LED based backlights for LCD displays. I provided significant technical and design support to large customers, including 3M, Global Lighting Technologies, Apple, Dell, and Hewlett Packard.

22. Between 2003 and 2004, I was at Beeman Lighting, where I was Director of Solid State Lighting Engineering, and my responsibilities included leading development of solid state lighting systems and materials.

23. Between 1998 and 2003, I was at Uniroyal Optoelectronics. Uniroyal Optoelectronics was a joint venture between Uniroyal Technology Corporation and Emcore Corporation which was initially focused on development and production of GaN-based and AlInGap-based LED chips. Later, Uniroyal Optoelectronics expanded their scope to include LED packages. At Uniroyal Optoelectronics, I held

a number of positions including Team Leader for the Epitaxial Growth and Materials Characterization areas, Sr. Epi Scientist, Director of Intellectual Property, University Relations and Government Contracts. My responsibilities included MOCVD hardware modification, epitaxial process development as well as design, development and testing of new LED chip structures for both AlInGaP and GaN-based material systems. I was also responsible for providing technical support and assistance to customers on topics related to use of LED chips, design of LED packages and design of LED based lighting products and systems. This support included both optical and thermal design of LED packages and LED lighting products. My work at Uniroyal included providing technical support and package design for Kopin which resulted in the development of full color micro displays that were used as electronic viewfinders for Kodak digital cameras.

24. I have also authored and presented more than a total of 30 publications, presentations, and seminars, and I am a named inventor on over 65 issued patents and more than 25 pending patents.

25. I earned a bachelor's degree in Chemical Engineering from Tulane University in 1989.

26. I earned a Ph.D. in Chemical Engineering from the University of Florida in 1997, where my graduate work focused on development of optoelectronic devices, including novel silicon based visible LEDs and sulfide based TFELD

structures and zinc selenide blue LEDs. As a graduate student, I was also an active participant in the Phosphor Technology Center of Excellence (PTCOE). The PTCOE was a large research consortium that was focused on technology development of display technology for electroluminescent (both alternating current and direct current) displays, field emission displays, and plasma displays.

27. In 1989 I worked for Shell Oil Corporation in Norco, LA. I was tasked with modeling heat exchanger performance for the crude oil distillation column in order to identify cost saving opportunities. I developed an improved model for determining the operating efficiency of heat exchange units that incorporated determined the economic impact on different operating conditions. The model was designed to be compatible with all major operating units on site and resulted in costs savings of over $20 million/year at the Norco Facility alone. My work was quickly adopted throughout the entire corporation and has resulted in sustained annual cost savings of approximately $500 million/year.

28. Based on the above education and experience, I believe that I have a detailed understanding of the state of the art during the relevant period, as well as a sound basis for opining how persons of ordinary skill in the art at that time would understand the claim terms and technical issues in this case. I believe that I would have this understanding regardless of which definition of a "person of ordinary skill in the art" is adopted by the Board. I meet Petitioner's proposed definition, which

is "a Bachelors' degree in electrical engineering or a comparable field of study, plus approximately one or more years of professional experience with electronic and optoelectronic system design", because I have a B.S. and a Ph.D. in Chemical Engineering as well as over 30 years of experience in LED design, a subfield of optoelectronics. As explained further in Section **Error! Reference source not found.** below, I have further experience in the design of LED packages and one year of practical experience in design of thermal management systems for LEDs.

29. The opinions stated in this declaration are based on my own personal knowledge and professional judgment; if called as a witness during any proceeding in this matter I am prepared to testify competently about them.

30. In forming my opinions, I have considered the materials discussed and cited herein, including the asserted patents, the prosecution histories of the patents, and the prior art references discussed herein, and any other references referred to or cited in this declaration.

III. THE '509 PATENT

31. The '509 Patent teaches a pixel structure that improves overall luminous uniformity compared to prior art electroluminescent devices. Ex. 1001, 1:48-50 ("The invention provides a pixel structure for solving the problem of poor overall luminous uniformity that occurs on the traditional electroluminescent device."). Luminous uniformity refers to how evenly bright a display appears. Non-

uniformity may occur due to different degrees of IPR drop experienced by different pixels in a pixel array and across individual pixels in an array. This is because of the inherent issues in fabricating thin conductors and electrodes in large displays. The high resistance due to thin conductors and electrodes in a display may cause uniformity issues due to "IR drop" at the display and pixel level. Ex. 1001, 1:33–44, 5:55–62, 7:37–42. Here, "I" refers to current, and "R" refers to resistance. The "drop" refers to drop in voltage "V" calculated by the equation V=I*R.

32. The '509 Patent inproves luminous uniformity by incorporating an auxiliary electrode structure that is electrically insulated from the light emitting device and acts to significantly reduce the total resistance of the pixel structure. Ex. 1001, 2:10-23 ("The auxiliary electrode is electrically insulated from the active device and located at a side of the light emitting device, wherein the auxiliary electrode is electrically connected with the first electrode layer of the light emitting device. Based on the above, in the pixel structure of the invention, the first electrode layer of the light emitting device is electrically connected with the auxiliary electrode. Therefore, the design of the invention that coordinates the first electrode layer of the light emitting device with the auxiliary electrode decreases the resistance of the first electrode layer through parallel connection, so as to significantly reduce the total resistance of the pixel structure, thereby improving the overall luminous uniformity of the display panel."). A POSITA would have understood that the

benefit to improved uniform luminosity does not result from reducing the resistance of all pixels structures in a pixel array. Rather, the luminous uniformity is improved across a pixel array by individually lowering the resistance of pixels structures to compensate for and to offset IR drop unique to each pixel.

33. The '509 Patent also teaches a simplified fabrication process that enables additional desirable benefits related to further reductions in resistive losses in displays. Ex. 1001, 5:55-62 ("It should be noted that, because the second electrode layer 136 of the light emitting device 130 is formed by the breaking-apart of the inverted-triangular first isolating structure 140, the second electrode layer 136 having a thinner thickness can be formed by a simplified fabrication process, so that the pixel structure 100 has higher transmittance and the second electrode layer 136 has lower resistance, and so on, thereby improving the problem of IR drop.").

34. Described embodiments of the '509 Patent reported reductions in device (pixel) resistance of about 40%. *See* Ex. 1001, 5:63-6:13, 7:37-52.

IV. SUMMARY OF THE ALLEGED PRIOR ART

A. Overview of Weaver

35. Weaver teaches a configuration of an OLED display controlled by an n-type transistor. "The present invention relates to the field of devices including an organic light emitting device (OLED) device controlled by an n-type transistor." Ex. 1004, ¶[0001].

36. Weaver's perceived novelty is understood to be the use of n-type thin film transistors which allow for lower driving voltages and results in the current through the LED and driving transistor being independent of the current-voltage characteristics of the OLED. Ex. 1004, ¶[0014] ("An embodiment of the present invention includes an n-type transistor fabricated over a substrate, the n-type transistor having a gate and two current-carrying electrodes. The device also includes a non-inverted organic light emitting device (OLED) fabricated over the substrate, the non-inverted organic light emitting device having an anode and a cathode. The most common OLED configuration has a cathode disposed over the anode, and may be referred to as a 'non-inverted' OLED. Because an OLED having an anode disposed over the cathode, it may be referred to as a 'inverted OLED'. The cathode is connected to one of the current-carrying electrodes of the n-type transistor. By connecting the cathode of the OLED to the transistor, the embodiments of the present invention make the use of n-type transistors practical. N-type thin film transistors may significantly lower the cost as compared to the use of low temperature polysilicon (LTP) p-type transistors. Embodiments of the invention allow for lower driving voltages, and results in the current through the OLED and driving transistor being independent of current-voltage characteristics of the OLED, as will be further explained below."), ¶[0019] ("Further, this configuration results in the current through the transistor 210 and through OLED 202 being substantially

independent of the current-voltage characteristics of the OLED. This is advantageous because the current-Voltage characteristics of an OLED may change over time, and may be different between a plurality of OLEDS that may be used together in a single device, leading to non-uniformities.").

37. It is my opinion that a POSITA understood that current-voltage characteristics would be more accurately described as dynamic resistance. Current-voltage characteristics are fully equivalent to the resistance at a fixed current, thus a POSITA understood that the device of Weaver operates independent of the resistance of the OLED pixel. This is important because Weaver is not disclosing a way to adjust the resistance of the OLED pixel (like the '509 Patent); rather, it is disclosing a way to operate a display that can compensate for any given pixel structure regardless of the current-voltage characteristics (dynamic resistance). Dynamic resistance is a fundamentally different phenomenon from IR drop across the wires of an array.

B. Overview of Lee053

38. Lee053 relates to an OLED display device and teaches a display with a reduced bezel width. Ex. 1005, ¶[0003] ("The present invention relates to an organic light emitting diode (OLED) display device and a fabrication method thereof and, more particularly, to an OLED display device capable of reducing a bezel width therein and a fabrication method thereof.").

39. Lee053 accomplishes its goals by reducing the width of power wiring and compensating for the reduced width by increasing the thickness, thus saving space. Ex. 1005, ¶[0044] ("According to embodiments of the present invention, in the OLED display device and the fabrication method thereof, when the existing power wiring using the metal for a data wiring is divided based on a common electrode marginal region as a boundary so as to be used as a wiring as well as as [sic] the power wiring, and here, the reduced width of the wiring is compensated for by increasing the thickness of the wiring by using a metal for an anode or a cathode, thus reducing the left and right bezel widths. Thus, since the bezel widths are reduced, the use of an unnecessary space is reduced without defiling the outer appearance or design."). Further, Lee053 teaches "forming a dummy wiring with a metal used for a gate wiring on the substrate of the wiring region." Ex. 1005, ¶[0041].

C. Overview of Song

40. Song relates to the field of large area OLED displays. More specifically, those in which individual OLED elements include large area electrodes. Ex. 1006, ¶¶[0008]-[0009] ("An OLED display is classified into a front emission type, a rear emission type, and a dual emission type. The front emission type OLED display has a structure in which a second electrode of an organic light emitting element is formed over the entire area of a substrate where the organic light emitting

element is formed in a thin film shape in order to reduce or minimize deterioration of luminance of light generated from an organic emission layer. However, because the second electrode formed as a thin film is formed over the entire area of the substrate in the front emission type OLED display, a voltage drop occurs in driving power passing through the second electrode for driving the organic emission layer due to electrical resistance of the second electrode.").

41. The understanding that Song relates to large area OLED displays is reinforced in Song's summary of the described invention. Ex. 1006, ¶ [0011] ("The described technology has been made in an effort to provide an organic light emitting diode (OLED) display that can reduce or minimize a voltage drop of power passing through a thin and large-sized electrode for driving of an organic emission layer.").

42. Song emphasizes that the issue to be resolved is with large area electrodes. Ex. 1006, ¶ [0028]. "According to an embodiment of the methods to resolve the issues under the present invention described previously, an organic light-emitting diode display is proposed that may minimize voltage drops of the power source that passes through the electrode, which is a thin film, and which covers a large area, to operate the organic light-emitting diode layer." This informs a POSITA that Song relates to large area pixels.

D. Overview of Lee149

43. Lee149 is directed to OLED displays, however, the primary focus of Lee149 relates to reliability of OLED displays—more specifically, Lee149 relates to issues with infiltration of moisture. Ex. 1011, ¶¶[0006]-[0007] ("However, since the active matrix type electroluminescent device is fabricated by attaching two substrates on which TFTs and organic electroluminescent layer are formed after forming a single seal line formed of ultraviolet sealant, moisture or gas may be easily infiltrated into the device. In order to prevent the infiltration of the moisture and gas, a substrate with additional materials such as moisture absorption agent is formed inside the device. This causes increase a thickness of the device. Furthermore, there is a limitation in preventing the infiltration of the moisture using the moisture absorption agent.").

44. A POSITA reviewing Lee149 would understand that the primary purpose of Lee149 is preventing infiltration of moisture and outgassing. Ex. 1011, ¶[0009] ("Embodiments provide an organic electroluminescent device that is designed to prevent infiltration of moisture and outgas into an organic electroluminescent layer by forming a plurality of passivation layers on a substrate on which the organic electroluminescent layer and a method of fabricating the electroluminescent device. Embodiments provide an organic electroluminescent device that is designed to prevent infiltration of moisture.").

E. Overview of Bae

45. Bae seeks to address problems inherent in prior art fabrication and assembly methods for OLED display devices. Ex. 1012, ¶[0012] ("In the organic electro-luminescence display device, the array element, including the TFT and the electrodes, and the organic electro-luminescent diode are stacked on the same substrate. The organic electro-luminescence display device is fabricated by attaching the substrate, on which the array element and the organic electro-luminescent diode are formed, to a separate substrate provided for encapsulation. In this case, the yield of the organic electro-luminescence display device is determined by the product of the yields of the array element and the organic electro-luminescent diode. Therefore, the entire process yield is greatly restricted by the process of forming the organic electro-luminescent diode. For example, even if the array element is successfully formed, the organic electro-luminescence display device becomes defective, when the organic electro-luminescent layer, which is generally a thin film having a thickness of about 1000 Å, has a defect cased [sic] by a foreign particle or other factors.").

46. One of the design features of Bae is use of a blanket first electrode 132 which is used to apply a common voltage to sub-pixels. Bae uses so-called auxiliary electrode 139, which are merely metal structures in direct contact with the first electrode, to apply the common voltage to the sub-pixels. Ex. 1012, ¶[0039] ("Auxiliary electrodes 139 are arranged around the sub-pixels in a grid shape. The

auxiliary electrodes 139 contact a first electrode 132 to commonly apply a voltage to the sub-pixels.").

F. Overview of Gupta

47. Gupta identifies problems with top emission OLED displays, which use common electrodes made from transparent conductive oxides. Specifically, Gupta stresses that designers face a performance trade off in which a balance must be struck between high optical transparency which favors use of thin films and low sheet resistance which favors use of thicker layers. Ex. 1009, 1:44-56 ("In a top emission OLED, the common electrode may be formed from a transparent conductive material like indium tin-oxide (ITO) and/or thin metals such as magnesium and silver. A metal common electrode may have better electrical conductivity than a common electrode formed from ITO, but to the metal common electrodes generally must be very thin in order to be optically transparent or semi-transparent. Such thin metal layers make the sheet resistance of the common electrode relatively large, especially when compared to a common electrode of a bottom emission OLED. Since light does not travel through the common electrode in a bottom emission OLED, the common electrode does not need to be optically transparent and so can be made as thick as desired.").

48. Gupta's solution is to apply a conductive mesh directly on top of common electrode structures. "This disclosure provides a conductive mesh or strip

on top of the common electrode to reduce sheet resistance of the common electrode." EX1009 1:67-2:2. It is my opinion that a POSITA would have understood that the teachings of Gupta are relevant only to OLED technologies that use a common ITO cathode. Ex. 1009, title, 1:8–12, 1:44–2:53, 4:50–5:32, 10:4–16. I further note that Gupta's approach is equivalent to merely increasing the thickness of an electrical conductor in order to reduce resistance.

G. Overview of Han

49. The general field of Han is OLED flat-panel light sources and more particularly large area flat panel light sources. Ex. 1010, ¶[0003] ("The present invention relates to an organic-light emitting-diode (OLED) flat-panel light-source apparatus and, more particularly, to an OLED flat-panel light-source apparatus and a method of manufacturing the same, which may improve the uniformity of electrical and optical properties of a ***large-area*** OLED flat-panel light-source apparatus required for an illumination system and a display device.") (emphasis added).

50. Han seeks to improve the uniformity of light emission over large areas by using a plurality of electrodes. Ex. 1010, ¶[0016] ("[T]he present invention provides a method of manufacturing an OLED flat-panel light-source apparatus. The method includes: depositing a metal layer on a substrate and patterning the metal layer to form a plurality of subsidiary electrodes; forming an insulating layer on the substrate including the plurality of subsidiary electrodes and forming a first

subsidiary electrode layer by etching the insulating layer until some of the plurality of subsidiary electrodes are exposed; and sequentially forming an anode, an organic EML, and a cathode on the substrate on which the first subsidiary electrode layer is formed."). These electrodes for distributing current are known as "branching electrodes."

FIG. 8

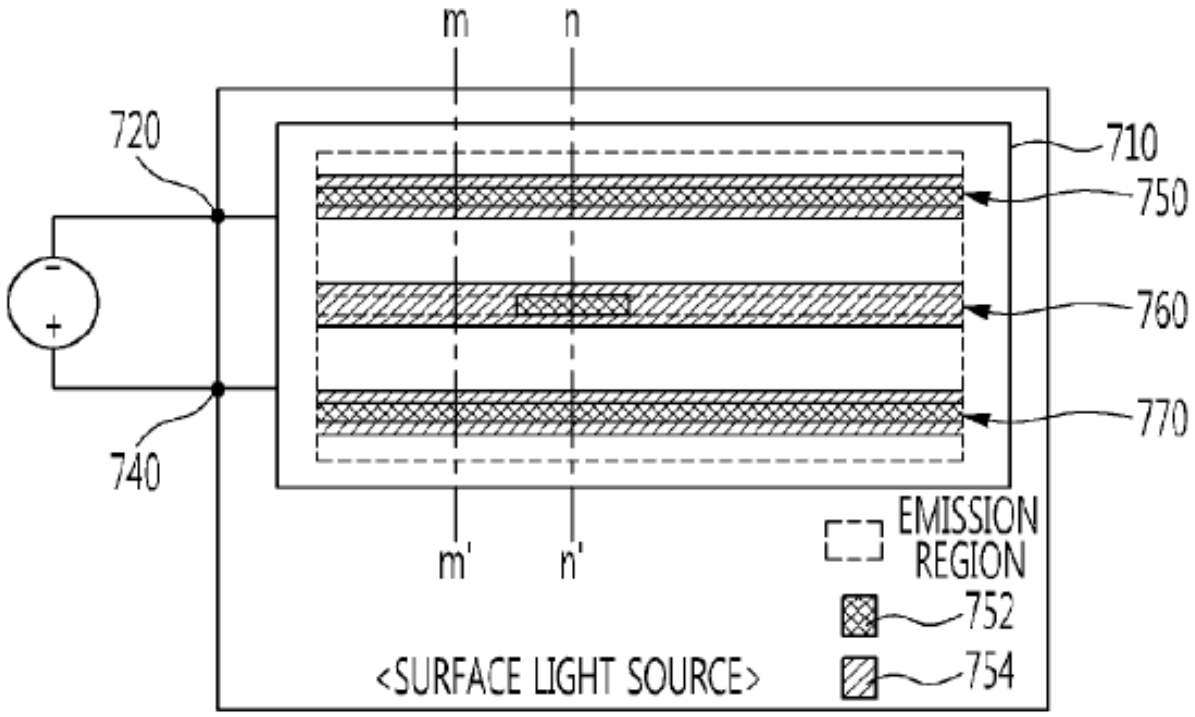

Ex. 1010 at Fig. 8 (showing flat-panel light source with branching electrodes under the emission region for current distribution).

51. Han uses the phrase "flat-panel light-source" over 60 times in the specification and in at least nine instances includes the additional descriptor "large

area". *See* Ex. 1010. These clearly denote that the relevant field of art for Han is related to general illumination, which is lighting an environment (for example, the lighting in a ceiling). Not only does Han refer to structures significantly larger than those of the '509 Patent, but it is a different type of light source having different goals. Specifically, the light from the source is intended to reflect of objects in the environment before it is seen by a human, which is distinct from displays. Light from a display is meant to be seen directly (meaning that it is not reflected off objects in the environment) but is generally intended to convey information and requires different design considerations. The technology and considerations for flat panel light sources and LED displays differ in terms of size, function, brightness, color, heat, cost, power, uniformity, manufacture, current, contrast, response time, durability, resolution, and in many other aspects. It is my opinion that Han would not be considered by a POSITA to be in the same field of art as the '509 Patent. For example, Han relates to light sources similar to those shown below:

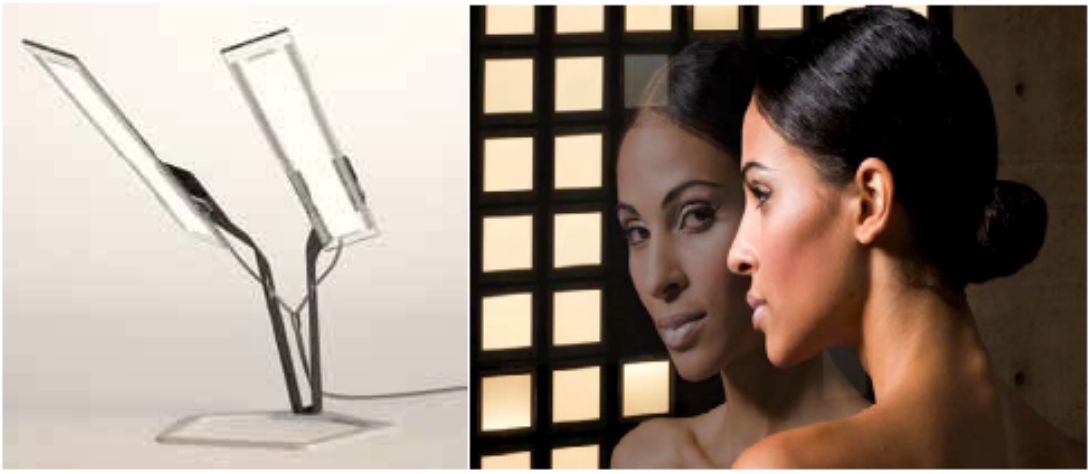

FIGURE 2.7 "V-LUX" OLED DESK LAMP AND "LIVINGSHAPES" INTERACTIVE OLED LIGHT AND MIRROR
Sources: Blackbody, Philips

Ex. 2021 at 15. Such flat panel light sources and LED displays present very different engineering challenges. The typical area of an OLED light panel is about 100 cm^2, while the area of a typical OLED display pixel is less than 0.1 mm^2. As such the considerations for emitter design are dramatically and significantly different as the emission areas differ in size by several orders of magnitude.

V. THE LEVEL OF ORDINARY SKILL IN THE ART

52. I have been informed that my analysis of the Challenged Claims should be viewed from the perspective of a person of ordinary skill in the art (POSITA) as the earliest claimed priority date, which I have been told to assume is September 12, 2013.

53. I understand that a POSITA is a hypothetical person presumed to have known the relevant art at the time of the invention. I have been informed that in determining the level of ordinary skill in the art the following factors may be

considered none of which is predominant: (1) type of problems encountered in the art; (2) prior art solutions to those problems; (3) rapidity with which innovations are made; (4) sophistication of the technology; and (5) educational level of active workers in the field.

54. I understand that Dr. Baker has opined that a POSITA "would have had a Bachelors' degree in electrical engineering or a comparable field of study, plus approximately one or more years of professional experience with electronic and optoelectronic system design. Additional graduate education could substitute for professional experience, and significant experience in the field could substitute for formal education." Ex. 1002, ¶46.

55. I disagree with Dr. Baker's opinion as to the level of skill in the art for the purposes of this IPR proceeding. To begin with, the patent describes that the field of invention relates to "a pixel structure and particularly relates to a pixel structure capable of improving the overall luminous uniformity of a display panel." Ex. 1001, 1:17–20. The field of optoelectronics is overly broad and expansive and encompasses solar cells, optical fiber, and any application of LEDs, not just the design of pixels. As an example, germanium photodiodes are within the field of optoelectronics, as are silicon photovoltaics. An individual with even a decade of experience working with either or both of those technologies would be unskilled and unsuited to design an LED package, much less an LED package for a specialized

application such as a display. Similarly, neither application is likely to equip an individual with the skills and knowledge necessary to deal with the complicated issues associated with heat dissipation and thermal management either at the LED package level or at the system level.

56. Similarly, a decade of experience in designing power supplies for compressors in commercial refrigerators would clearly fall within the field of electronic design, but such an individual could not be expected to have any experience with even use of LEDs, much design of LED packages and thermal management at the LED package or system level.

57. I considered (1) type of problems encountered in the art: problems encountered in LED and OLED pixel design included, among other things, power efficiency, heat management, color uniformity and consistency, size constraints, materials and process limitations, and complex drive circuits.

58. I considered (2) prior art solutions to those problems: solutions included materials choices, process development. For example, to address power efficiency, POSITAs would use bus lines as the primary source of power delivery to a pixel structure. These bus lines would be made of highly conductive materials, and the thickness or width of a bus line could be increased according to a well-known formula (increasing cross-sectional area decreases resistance).

59. I considered (3) rapidity with which innovations are made: the development of LED and OLED technologies took place over an expansive time period before they became viable solutions for pixels in displays—the rapidity in the development moved relatively slow.

60. I considered (4) sophistication of the technology: LED and OLED pixel design is a sophisticated technology, and requires a deep technical understanding in areas unique to LEDs, OLEDs, and displays, including color gamut, heat management, materials designs, and pixel structural considerations.

61. I considered (5) educational level of active workers in the field: the educational level of active workers in the field had at least a Bachelors' degree in a field of engineering or physics.

62. Based on my decades of experience in the LED industry, which includes design of LED packages and displays using LEDs as well as training individuals to perform these tasks, **a person of ordinary skill in the art would have at least a Bachelors' degree in a field of engineering or physics and at least two years of professional experience related to the design and manufacture of LED or OLED pixels for flat panel displays**. Additional graduate education provided it included relevant semiconductor manufacturing or flat panel display technology could reduce but not eliminate the time requirement for professional experience.

A. Dr. Baker is Not a POSITA

63. In my opinion, Dr. Baker does not have the experience required to be a POSITA for the '509 Patent.

64. I have reviewed Dr. Baker's CV, marked Appendix B of Ex. 1003, and do not believe he has the requisite experience designing LED pixels.

65. In my opinion, Dr. Baker has not had the necessary experience working with LEDs and OLEDs for displays. For example, he stated that he worked on LEDs or OLEDs in displays during his consulting work for Cirque, Inc. Ex. 2028, 37:19-38:3. It is my opinion that his experience at Cirque did not equip Dr. Baker with the knowledge a POSITA would have for the '509 Patent because his work was about capacitive touch, not the design of LEDs or OLEDs in pixels. *See* Ex. 1003 at 113 ("2013: Cirque, Inc. Consulting on the design of analog-to-digital interfaces for capacitive touch displays and pads."). I used the Wayback Machine to look at the products Cirque was offering in the time frame Dr. Baker was working there, and it is my opinion that they would not have been the same technology as required for the manufacture of displays themselves. *See* Ex. 2010 ("capacitance sensor panels are optically clear, touch sensitive panels that can be placed over LCD displays"). Exhibit 2010 is an accurate PDF printout of what I saw on the Wayback Machine. Capacitive touch displays and LED/OLED displays require different considerations and technologies for power, current, thermal management, color, brightness, sharpness, contrast, uniformity, component, design, reliability, size, and many other

aspects. Experience with capacitive touch displays does not make a person qualified to work on LED/OLED displays, and vice versa.

66. Dr. Baker went on to describe work in photo detectors, which do not involve the same design or materials considerations that would arise in developing a pixel using and LED or an OLED. *See* Ex. 2028, 45:23-48:1. Indeed, photodetectors are functional opposites of LEDs and OLEDs as they are designed and optimized to absorb and detect light, not to emit light. I also considered Dr. Baker's work at Micron around 1994 where he evaluated technologies at that time, but this did not give Dr. Baker experience with designing LEDs for displays at the time of the invention in 2013. Ex. 2028, 21–25. I also considered Dr. Baker's experience with CRT displays, but CRT's are a fundamentally different type of display technology where light is generated by high energy electrons striking a phosphor housed in a vacuum environment, not from LEDs, which are solid state devices that generate light from low voltage carrier injection and followed by radiative recombination.

67. After reviewing Dr. Baker's CV and his deposition testimony, it is my opinion that Dr. Baker does not qualify as a POSITA under the definition "a person of ordinary skill in the art would have at least a Bachelors' degree in a field of engineering or physics and at least two years of professional experience related to the design and manufacture of LED or OLED pixels for flat panel displays."

VI. APPLICABLE LEGAL STANDARDS

68. I am not a lawyer and offer no legal opinions. My analysis and opinions are based on my expertise in this technical field and on the instruction that counsel has given me for the legal standards outlined in the rest of this section. These principles are summarized below.

A. Burden of Proof

69. I understand that the petitioner must prove invalidity of a patent claim by a preponderance of the evidence, that is, the evidence must be sufficient to show that a fact or legal conclusion is more likely than not.

B. Date of Invention

70. I have been asked to use the date of the filing of the earliest application to which priority is claimed (i.e., December 1, 2004) as the date of invention for purposes of my analysis.

C. Anticipation

71. I understand that a claim may be anticipated if a prior art disclosure teaches each and every element required by the claim, either expressly or inherently. The identical invention must be shown in as complete detail as is contained in the claim. When a claim covers several structures or compositions, either generically or as alternatives, the claim is deemed anticipated if any of the structures or compositions within the scope of the claim is known in the prior art.

72. I understand that, once the claims of a patent have been properly construed, the next step in determining anticipation of a patent claim requires a comparison of the properly construed claim language to the prior art on a limitation-by-limitation basis.

D. Obviousness

73. I understand that even if a patent claim is not anticipated, it may still be invalid if the differences between the claimed subject matter and the prior art are such that the subject matter as a whole would have been obvious at the time the invention was made to a person of ordinary skill in the pertinent art.

74. I also understand that a patent may be rendered obvious based on an alleged prior art reference or a combination of such references plus what a person of ordinary skill in the art would understand based on his or her knowledge and the references. It is also my understanding that in assessing the obviousness of claimed subject matter one should evaluate obviousness over the prior art from the perspective of one of ordinary skill in the art at the time the invention was made (and not from the perspective of either a layman or a genius in that art).

75. I understand that a patent claim composed of several elements is not proved obvious merely by demonstrating that each of its elements was known in the prior art. There must be a reason for combining the elements in the manner claimed. That is, there must be a showing that a person of ordinary skill in the art at the time

of the invention would have thought of either combining two or more references or modifying a reference to achieve the claimed invention.

76. I understand that an obviousness determination includes the consideration of the following factors: (1) the scope and content of the prior art, (2) the differences between the prior art and the claims at issue, (3) the level of ordinary skill in the art, and (4) any secondary indicia of non-obviousness (*e.g.*, "secondary considerations" such as commercial success in the marketplace of the claimed invention), to the extent that they exist. I understand that the following are examples of approaches and rationales that may be considered:

- Combining prior art elements according to known methods to yield predictable results;
- Simple substitution of one known element for another to obtain predictable results;
- Use of a known technique to improve similar devices (methods, or products) in the same way;
- Applying a known technique to a known device (method or product) ready for improvement to yield predictable results;
- Applying a technique or approach that would have been obvious to try (choosing from a finite number of identified, predictable solutions, with a reasonable expectation of success);

Optronic Sciences LLC, Ex. 2026
BOE Technology Group Co., Ltd. v. Optronic Sciences LLC, IPR2024-01133
Page 35 of 80

- Known work in one field of endeavor may prompt variations of it for use in either the same field or a different one based on design incentives or other market forces if the variations would have been predictable to a person having ordinary skill in the art; and
- Some teaching, suggestion, or motivation in the prior art that would have led one of ordinary skill to modify the prior art reference or to combine prior art reference teachings to arrive at the claimed invention.

77. I understand that the burden is on the petitioner to explain how an invention is obvious if one of ordinary skill in the art, facing a wide range of needs created by developments in the field, would have seen an obvious benefit to the solutions tried by the applicant. I further understand when there is a design need or market pressure to solve a problem and there are a finite number of identified, predictable solutions, it may be obvious to a person of ordinary skill to try the known options. If a technique has been used to improve one device, and a person of ordinary skill in the art would recognize that it would improve similar devices in the same way, using the technique would have been obvious.

78. I understand that the burden is on the petitioner to explain how specific references could be combined, which combinations of elements in specific references would yield a predictable result, and how any specific combination would

operate or read on the claims. I further understand that the petitioner cannot rely on conclusory statements but must instead provide a reasoned explanation supported by evidence. I also understand that obviousness does not exist where the prior art discourages or teaches away from the claimed invention. I also understand that even if a reference does not teach away, its statements regarding preferences are relevant to a finding whether a person skilled in the art would be motivated to combine that reference with another reference.

79. I also understand that one of ordinary skill in the art must have a reasonable expectation of success in combining or modifying prior art references.

80. I also understand that all elements of a claim must be considered in an obviousness analysis.

81. I understand that it is impermissible to use hindsight to arrive at the claimed invention. My understanding is that the inventor's own path never leads to a conclusion of obviousness. I also understand that, when assessing whether there was a motivation to combine references to teach a claim element, defining the problem in terms of its solution reveals improper hindsight.

E. Claim Construction

82. I understand that claims are construed from the perspective of a person of ordinary skill as of the effective filing date of the patent application. A "person of

ordinary skill in the art" is a hypothetical person who is presumed to have known the relevant art at the time of the invention.

83. I understand that persons of ordinary skill in the art are deemed to read the claims in the context of the entire patent, including the specification and prosecution history.

84. I understand that the claims define the invention and the terms used in the claims are generally given their plain and ordinary meanings they would have to a person of ordinary skill in the art at the time of the effective filing date of the application. The context of a claim can be particularly helpful, and other claims may inform the meaning of a term in a particular claim.

85. I understand that claim terms are normally used consistently throughout a patent. Thus, the meaning of a term may help inform the meaning of the same term in other claims. Differences between claims may also help define the terms, although this may not be the case where the specification or prosecution history indicate that such differences do not impact the scope of the claims.

86. I understand that a patentee can act as its own lexicographer by defining a term, in the patent specification, to have a specific meaning. It is my understanding that statements made to the patent office by the patentee or its legal representative during prosecution can serve to illuminate, or possibly narrow the proper scope of claim terms, and that such statements must be considered when construing the claim

terms. This is sometimes referred to as a disclaimer. I have taken into account these principles in my analysis.

87. I understand that reference materials that were publicly available at the time that the patent application was filed, such as dictionaries, treatises or other technical references, may provide context and background for deciphering how one of ordinary skill in the art would have considered the terms used in the claims.

88. However, I understand that such references, as well as testimony (including this report) are generally known as "extrinsic evidence,: and are accorded less weight than evidence found within the patent and prosecution history. In addition, I understand that extrinsic evidence that is inconsistent with the claims, specification, or prosecution history should not be considered in the claim construction process

F. Section 112(f) Means Plus Function

89. I understand that under pre-America Invents Act (AIA) 35 U.S.C. § 112(6) and post-AIA § 112(f) "An element in a claim for a combination may be expressed as a means or step for performing a specified function without the recital of structure, material, or acts in support thereof, and such claim shall be construed to cover the corresponding structure, material, or acts described in the specification and equivalents thereof."

Optronic Sciences LLC, Ex. 2026
BOE Technology Group Co., Ltd. v. Optronic Sciences LLC, IPR2024-01133
Page 39 of 80

90. I understand that when claim terms use the words "means . . . for" and recites a function, and the term does not recite any structure for performing that function, the term should be construed pursuant to Section 112(f) looking for a corresponding structure, material, or act described in the specification and equivalents.

G. Section 112 Definiteness

91. I understand that, under 35 U.S.C. § 112 ¶ 2, "[t]he specification shall conclude with one or more claims particularly pointing out and distinctly claiming the subject matter which the applicant regards as his invention."

92. I understand that that claims must be definite. This means that the claims must particularly point out and distinctly claim the subject matter that the applicant regards as her invention. I understand that indefiniteness is evaluated from the perspective of a person of ordinary skill in the art at the time of a patent's filing. I understand that a patent claim is indefinite if the claim, when read in light of the specification and the prosecution history, fails to inform, with reasonable certainty, a person of ordinary skill in the art of the scope of the invention. Absolute or mathematical precision in claim language is not required and even if more than one interpretation is presented for a claim term, the term may still be definite if an informed and confident choice is available among the contending alternative definitions.

VII. CLAIM CONSTRUCTION

93. I understand that when claim terms use the words "means . . . for" and recites a function, and the term does not recite any structure for performing that function, the term should be construed pursuant to Section 112(f) looking for a corresponding structure, material, or act described in the specification and equivalents.

94. I understand that in *Inter Partes* review, claims "shall be construed using the same claim construction standard that would be used to construe the claim in a civil action under 35 U.S.C. 2282(b), including construing the claim in accordance with the ordinary and customary meaning of such claim as understood by one of ordinary skill in the art and the prosecution history pertaining to the patent." 37 C.F. R. § 42.100(b). This is also referred to as the *Phillips* standard as explained in the Case *Phillips v. AWH Corp.*, 415 F.3d 1303 (Fed. Cir. 2005). I have applied this standard in rendering my opinions herein.

A. "auxiliary" (claims 1-2, 5-6, 10-11, 13)

95. I provided a full analysis of the term auxiliary in the co-pending district court litigation, which is attached as Exhibit 2017. As I explained to the district court in Ex. 2017, it is my opinion that the term "auxiliary" should be afforded its plain and ordinary meaning, which does not include primary and essential. Ex. 2017 ¶¶55–73.

96. The plain meaning of "auxiliary" is something that is subsidiary or supplemental to another thing. Ex. 2014 at 94 ("acting as a subsidiary; supplementary"); Ex. 2015 at 94 (3rd College Ed. 1994) ("additional; supplementary; reserve"); Ex. 2016 at 77 (2001) ("acting as a subsidiary"). For example, "auxiliary" when used in the power context could refer to a back-up power source, like a battery or generator, that would be used to supplement a main power source, like a city power grid.

97. The definition from the technical-focused dictionary cited by Petitioner similarly defines an "auxiliary anode" as "a supplementary anode utilized to obtain a better distribution of plating." Ex. 1013 p. 51.

98. "Auxiliary" is used in the intrinsic evidence to modify an electrode. In the '509 patent, the "auxiliary" electrode is electrically connected to the first electrode layer (claim 1[e]) and can be electrically insulated from the second electrode layer (claim 11). Claims 10 and 11 include a second auxiliary electrode that is electrically connected to the first electrode layer. The claims are consistent with the plain and ordinary meaning of "auxiliary." They are contrary, however, to Petitioner's broader interpretation of "auxiliary" to mean any electrode other than the first electrode. Indeed, in the '509 Patent, the claims require an "auxiliary electrode" in addition to a "first electrode layer" and a "second electrode layer." If any meaning, it is unclear what the difference between the "auxiliary electrode" and

"second electrode layer" is because they are both not the "first electrode layer." The plain and ordinary meaning has no such issues.

99. The specification also confirms that "auxiliary" is meant to refer to something that is not primary and essential. The specification describes embodiments where the auxiliary electrode can be "coordinated" with the first electrode layer to "reduce the resistance of the first electrode layer 132" and that the design of the "auxiliary electrode" can be coordinated with "other suitable electrode layers or conductive layers." Ex. 1001 at 5:63-6:13, 8:14-33. In an embodiment using a second "auxiliary" electrode, it is also described as providing additional functionality to the first electrode layer. *Id*. at 7:43-60. In other words, consistent with the plain meaning of "auxiliary," the specification describes the "auxiliary electrodes" as providing supplemental functionality to the first electrode layer. It is not simply an additional electrode.

100. Further, Petitioner's expert opines that "the claims do not explicitly state what function or characteristic existed without the auxiliary electrode that has been supplemented with the auxiliary electrode." Ex. 1003, ¶ 56. In deposition, Petitioner's expert further explained that his opinion was that "auxiliary" electrode is anything other than claimed first electrode layer. Ex. 2028 at 69:1-70:4. Petitioner's expert seems to consider "auxiliary electrode" without the context of the remainder of the intrinsic evidence. The claims, when read in the context of the

plain meaning of "auxiliary" and the specification, tell a POSITA that the "function or characteristic" being supplemented by the "auxiliary electrode" is the "function or characteristic" of the first electrode layer. One of the examples used in the specification is a parallel arrangement that would reduce resistance. In that embodiment, the electrode is "auxiliary" because it is not the primary and essential electrode, but provides the supplemental functionality of allowing for the electrodes to reduce the resistance of the pixel structure. Conversely, without the auxiliary electrode in this preferred embodiment, the first electrode layer would still result in an operable pixel structure but it would have higher resistance.

101. This function of a preferred embodiment is explicitly stated in the specification of the '509 patent. "Therefore, the design of the invention that coordinates the first electrode layer of the light emitting device with the auxiliary electrode decreases the resistance of the first electrode layer through parallel connection, so as to significantly reduce the total resistance of the pixel structure, thereby improving the overall luminous uniformity of the display panel." Ex. 1001, 2:17-23. Thus, a POSITA reading the specification clearly understands at least one function of the auxiliary electrode in a preferred embodiment, namely to reduce the resistance of the first electrode layer and thereby reduce the total resistance of the pixel structure.

102. Nothing in the file history changes my opinion of the proper construction of the term "auxiliary."

103. Accordingly, it is my opinion, "auxiliary" should be afforded its plain and ordinary meaning, which does not include primary and essential.

B. "electrode" (claims 1-2, 5-6, 10-11, 13)

104. I provided a full analysis of the term auxiliary in the co-pending district court litigation, which is attached as Exhibit 2017. As I explained to the district court in Ex. 2017, it is my opinion that the term "electrode" should be afforded its plain and ordinary meaning, which is an "end structure of a conductor for making electrical contact." Ex. 2017 ¶¶66–73.

105. According to the dictionary cited by Petitioner, an "electrode" is an electrical conductor that "provides the path for current entering or leaving a medium such as a dielectric [or] semiconductor." Ex. 2012 at 237. Other dictionaries recite similar definitions. *See, e.g.,* Ex. 2013 at 694 ("an electric conductor through which an electric current enters or leaves a medium, whether it be an electrolytic solution, solid, molten mass, gas, or vacuum"). Both of the definitions are consistent with Optronic's proposed construction and the understanding of the term to a POSITA. Neither of these definitions apply to an intermediary structure, like a bus line.

106. In my opinion, nothing in the claims or specifications expand the definition of electrode as to be any conductor. *Contra* Ex. 2028, 69:6–8 ("Q[:] And

what do you mean by "supplemental [electrode]"? A[:] An additional electrode. An additional conductor."). In the claims, the "electrode" layers and auxiliary "electrode" are electrically connected to each other, and the first "electrode" layer is electrically connected to the active device. Like its plain and ordinary meaning, "electrode" is used as an end point, not the road to get to an end point. The specification of the '509 Patent contains a similar disclosure. *See, e.g.*, Ex. 1001 at 4:5-56, 5:25-6:21, 6:29-58, 7:1-60, 8:4-23.

107. Nothing in the file history changes my opinion of the proper construction of the term "electrode."

108. Accordingly, in my opinion, the term "electrode" should be given its plain and ordinary meaning, which is an "end structure of a conductor for making electrical contact."

VIII. Hindsight

109. In my opinion, Dr. Baker's reliance on hindsight is rampant and plainly visible throughout the record.

110. Dr. Baker showcased his hindsight process on the record. He started by reviewing the '842 Patent before looking at the prior art to form an opinion about what was obvious. Ex. 2028 at 11:6–9. Thus, he looked at the solution before looking at the problem. Dr. Baker estimated spending 115 hours preparing his declarations for the '509 Patent and the related '733 Patent yet was unable to

demonstrate the purportedly "obvious" combinations without resorting to hindsight. Ex. 2029, 295:12–16.

111. Dr. Baker demonstrated how he worked backwards from the language of the claims to reconstruct the '509 Patent while on the record. *See* Ex. 2022; Ex. 2023; Ex. 2024; Ex. 2025; Ex. 2028, 197:2–14 ("Q[:] So to the extent that any other modifications you think are necessary and obvious, let me know now; otherwise, I will PDF this and get it committed as an exhibit. A[:] Well, just one sec. I mean, Claim 11 teaches using the material 422. So you don't have an additional layer. So it'd probably be better to cover both Claims 10 and 11 with the modification, and you can easily do that by getting rid of the red box and just – or moving the red box to where it's on the same layer as 422 and then just extending it down to the -- yeah, kind of."), 206:16 ("Hold on, let me look at the claim language"), 206:20–12 (". . . let me read them, read the claim again.").

112. Additionally, Dr. Baker takes many contradictory positions. For example, he repeatedly stated during his deposition that a "POSITA is not a person that is changing the process," yet his proposed modifications involve changes to the fabrication process. *Compare* Ex. 2028, 139:22–140:2 ("[A] POSITA is someone who designs optoelectronic systems. They take components. They put them together . . . A POSITA is not a person that is changing the process . . ."), *see also id.*, 137:15–22 ("[Q:] So could you please tell the board: Would a POSITA who had Weaver's

technology at the time of the invention , would this POSITA have or not have the freedom to modify the process? A[:] . . . [T]he question doesn't make a lot of sense because it has the underlying . . . assumption that the POSITA would be able to modify the process), 141:9–11 ("A POSITA is going to be somebody that makes an optoelectronic system using components that are already available."); *with* Petition at 33 ("The modification to Weaver could be implemented, for example, by adding an additional electrode layer electrically connected to the bus line 430 . . ."), 37 ("A POSITA would have been motivated to implement the solution of Lee053 in the Weaver device to manufacture the device more efficiently.").

113. Dr. Baker proposes modifications to Weaver that include extending via 428 through bus line 430, which the original structure of Weaver did not do—the modification requires that the newly added bus line feature be made of the same material as Weaver's drain 405 and source 407 which previously acted as etch stop layers for the via etch process:

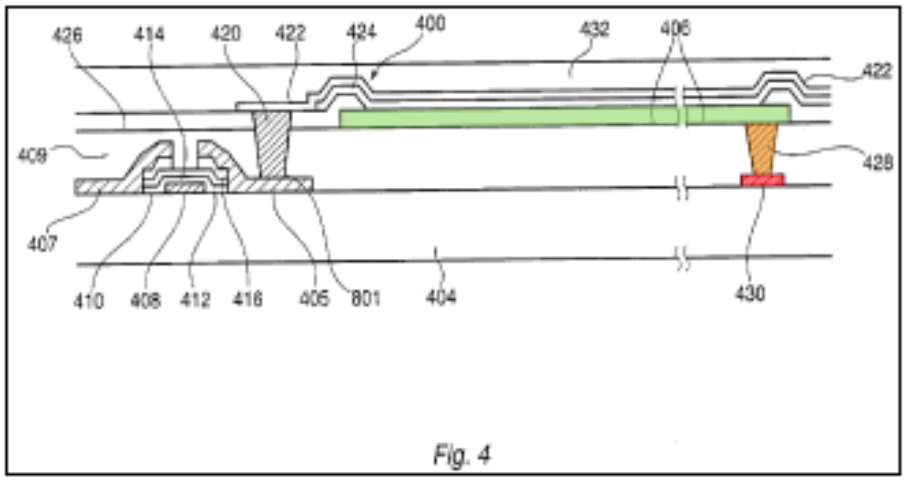

Compare Ex. 1003, ¶98 (showing an annotated Ex. 1004, Fig. 4), *with*

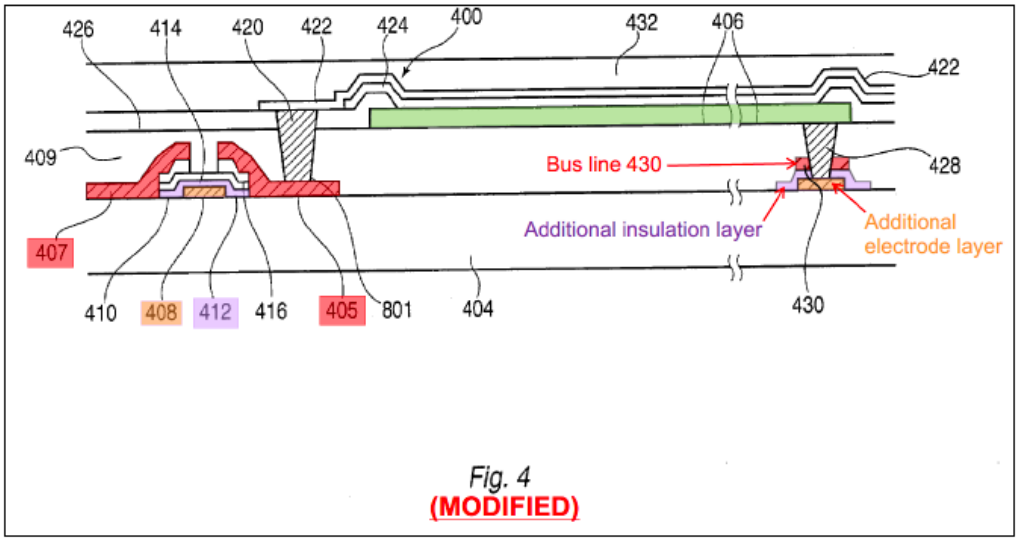

Ex. 1003, ¶130 (showing a proposed modification to Ex. 1004, Fig. 4).

114. As is plainly seen in the unmodified Fig 4 above, Weaver teaches that via 428 extends to bus line 430. A POSITA understood that via 428 would have been made with etching and that bus line 430 is an etch stop—this means the etch process stops at the material of bus line 430 and cannot etch into bus line 430. If a POSITA wanted to extend via 428 through bus line 430, as the modified figure above shows, the POSITA would have had to change the process to create the via 428 through bus line 430, shown in the modified figure above. However, Dr. Baker was emphatic that a POSITA would not change the process. Ex. 2028, 139:22–140:2 ("[A] POSITA is someone who designs optoelectronic systems. They take components. They put them together . . . A POSITA is not a person that is changing the process . . ."), 137:15–22, 141:9–11. Dr. Baker's modification requires a change

to the process, which contradicts his definition of a POSITA—it is an apparent reliance on hindsight that blinds him to the implications of his proposed changes, as he does not provide a sufficient motivation other than a desire to invalidate the claims.

115. To avoid the inconsistency between the grounds and not changing the process, Dr. Baker seemed to make a convoluted argument during his deposition. Specifically, he seemed to suggest that that bus line 430 would be patterned around via 428 so that it did not have to be etched. *See* Ex. 2028, 189:10–13. Any attempt to pattern bus line 430 around via 428 would extend bus line 430 in a horizontal direction—the very thing Dr. Baker was trying to avoid by proposing this combination. It is my opinion that no POSITA would have done what Dr. Baker is suggesting. There are other problems with Dr. Baker's proposal, including his creation of a bus lines with small widths smaller than features of the transistor on the left. This suggests that Dr. Baker's proposal requires a new process that can fabricate features smaller than what is used for the transistor. Even if possible, these new, smaller width bus lines would be difficult to fabricate and would decrease yield. On the other hand, if Dr. Baker is not proposing to reduce the width of the bus line 430 and instead is proposing that a POSITA would be able to pattern the width of bus line 430 twice, then a POSITA would have instead just made the bus line wider. I explain this further in Section XIX below.

116. If a POSITA wanted to reduce resistance and making bus line 430 wider was an option, they would have simply made bus line 430 wider without bothering with additional layers. Adding layers, especially when trying to *pattern vias*, would reduce yield, so a POSITA would greatly prefer to just increase the width without adding unnecessarily complex steps. In my opinion, Dr. Baker's proposition is fueled entirely by hindsight and does not reflect what a POSITA would have done.

117. In my opinion, the mere fact that Petitioner's "expert" needed to resort to hindsight after 115 hours of detailed preparation highlights the fact that the proposed modifications would not have been obvious to a POSITA at the time of invention. *See, e.g.,* Ex. 2022, 5:04–5:45 (regarding Ex. 2018, trying to combine Weaver and Lee149), 6:55–7:12 (regarding Ex. 2018, trying to combine Weaver and Lee149); Ex. 2023, 1:28–39 (regarding Ex. 2018, trying to combine Weaver and Lee149); Ex. 2024.

118. Additionally, Dr. Baker fails to identify any adequate motivation to modify Weaver as he proposes. For example, the petition states the motivation would be to lower the Weaver device's resistance. *See* Petition at 33, 47, 58, 67, 76. Only with respect to the combination of Weaver and Lee053 does Petitioner state the motivation would be to reduce the resistance "and/or" allow for reduced wiring widths. Petition at 33. However, as I noted above, in order to modify Weaver as Dr. Baker has proposed (without etching), the bus line 430 would have to extend

horizontally around via 428. Extending bus line 430 horizontally would defeat the goal of "reduced wiring widths". It is my opinion that the only way these proposed modifications could have arisen is with hindsight and a desire to invalidate the claims of the '509 Patent.

119. I would also like to note that Dr. Baker testified that he spent approximately 115 hours preparing his declaration and eight hours preparing for his deposition. Ex. 2029, 295:12–16. After all this preparation, I would expect Dr. Baker (as a purported expert in the field) to have a command of exactly how the references would be combined. However, he was unable to illustrate the result of his proposed modifications without resorting to the language of the claims to reconstruct the patent. In my opinion, this illustrates that the claims would not have been obvious to a POSITA and that Dr. Baker is not qualified for purposes of the '509 Patent.

IX. Challenge 1: The Petition's Anticipation Theory Based on Weaver Fails to Disclose All Elements of Claims 1-5, 9, and 12-13

120. The Petition and Dr. Baker's challenge 1 asserts that Weaver anticipates claims 1-5, 9, and 12-13. In my opinion, and as I discuss below, Weaver fails to disclose the limitations of the '509 Patent.

A. Weaver Does Not Anticipate an "Auxiliary Electrode"

121. I have applied the construction of "auxiliary" that means using its plain and ordinary meaning, which does not include primary and essential. The term

"electrode" is also applied using its plain and ordinary meaning, which is an end structure of a conductor for making electrical contact."

122. Dr. Baker and Petitioner point to the bus line 430 of Weaver as the claimed "first auxiliary electrode." *See, e.g.*, Petition at 16 (alleging that Weaver discloses "a first auxiliary electrode (bus line 430)" for claim [1c]), 19 (same for claim [1d]), 20 (same for claim [1e]). This is interpretation is based on an incorrect and overbroad interpretation of the terms. It is my opinion this interpretation could only have arising with hindsight and a desire to invalidate the claims.

123. Weaver does not define the term "bus line." *See* Ex. 1004. Therefore, the term "bus line" should be afforded its plain and ordinary meaning, which means a wire or conductor in a conducting system or supply point. Ex. 2011 at 86 ("bus[:] . . . a conducting system or supply point, usually of large capacity. May be composed of one or more conductors, which may be wires, cables or metal bars (busbars)."), 88 ("bus line[:] one of the wires or conductors that constitute a bus . . ."). This definition is consistent with the teachings of Weaver and what a POSITA would have understood bus line 430 to be.

124. A POSITA understood that bus line 430 was the only way Weaver's pixel structure got power. Specifically, a POSITA understood that Weaver's bus line 430 was connected in series with anode 406 because the electricity flows from bus line 430 to anode 406 through point contacts (vias 428):

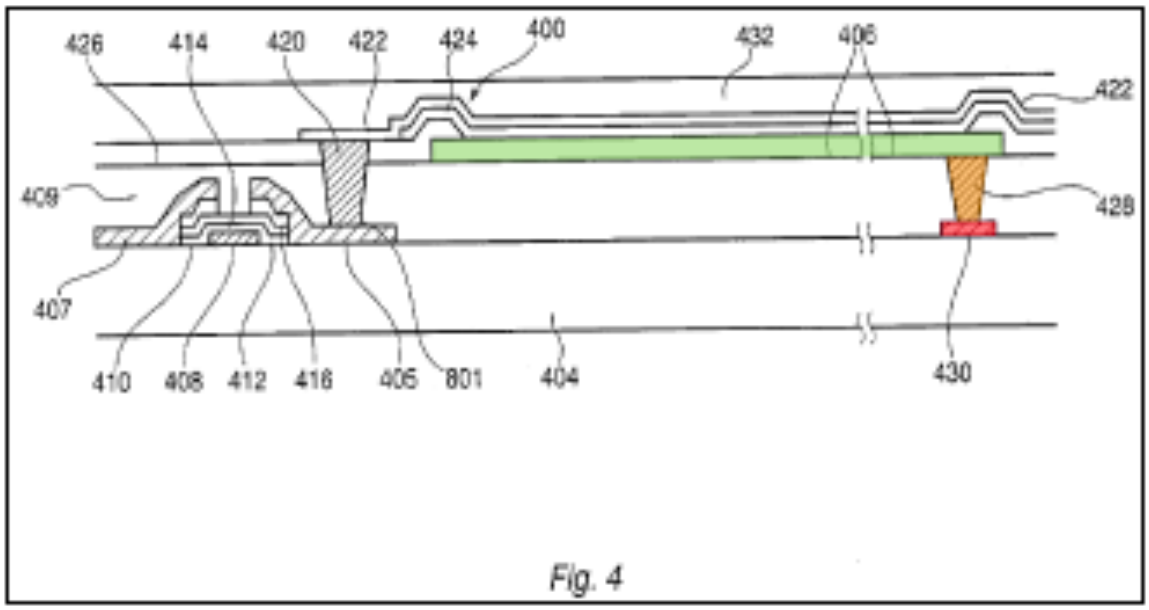

Ex. 1003, ¶ 98 (showing an annotated Ex. 1004, Fig. 4).

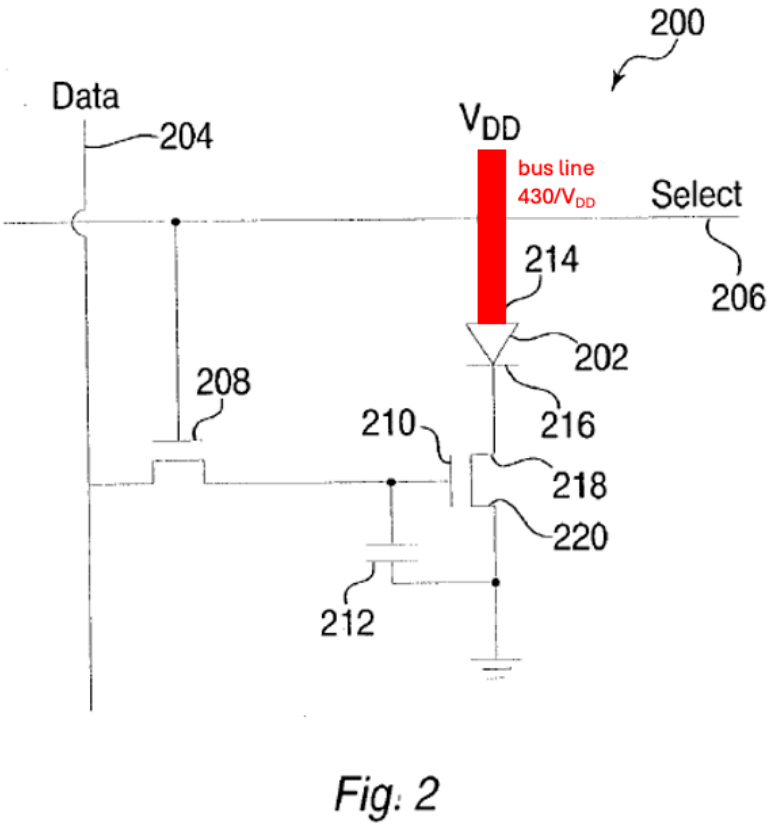

Ex. 1003 Fig. 2 (annotated to show corresponding bus line connecting to V_{DD})

125. If bus line 430 was removed, the structure of Weaver would no longer function because it was deprived of its power delivery means. Accordingly, bus line 430 is not "auxiliary" because it is primary and essential to the operation of the pixel structure. In this sense, the bus line 430 functions like and corresponds to the power line PL that is disclosed in the '509 Patent specification but not shown in the figures. Ex. 1001, 3:32–43. But given that Weaver's bus line 430 functions like and corresponds to the power line PL of the '509 Patent that is omitted from the patent figures, Weaver's bus line 430 cannot also be the auxiliary electrode that is shown in the figures of the '509 Patent.

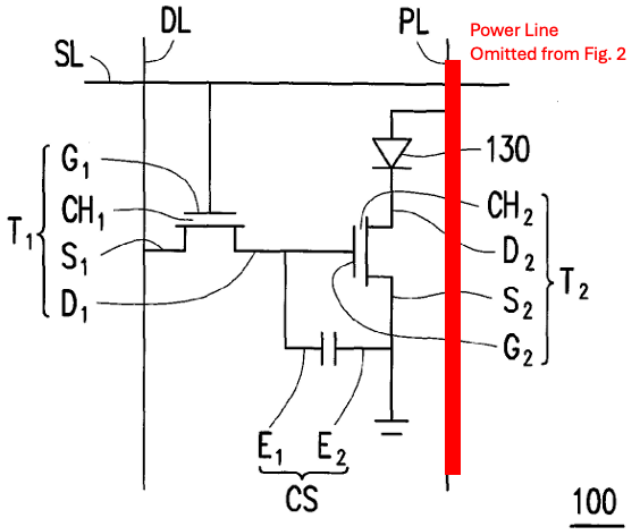

FIG. 1

Ex. 1001 at Fig. 1 (annotated to show Power Line PL that is omitted from Fig. 2).

126. In my opinion, any assertion by Petitioner that Weaver's anode 406 and bus line 430 are connected in parallel is not disclosed by Weaver and is contrary to the understanding of a POSITA under the plain and ordinary meaning of the term "bus line," and could only be reached through the use of hindsight.

127. Additionally, bus line 430 is not an "electrode" under the plain and ordinary meaning of the term, which is "an end structure of a conductor for making electrical contact." Specifically, bus line 430 extends well beyond any "end structure for making electrical contact" and encompasses the entire wiring of the bus line. A POSITA would not refer to such a structure as an electrode without hindsight.

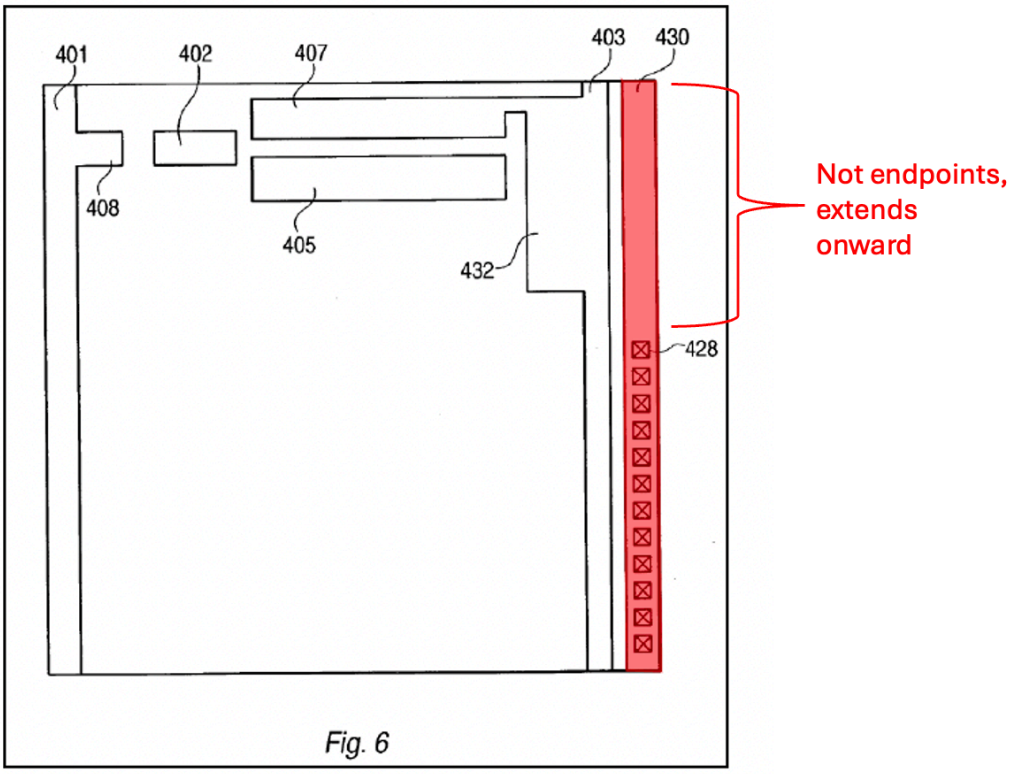

Fig. 6

128. Thus, in my opinion, Weaver does not disclose every element of the claims of '509 Patent and does not anticipate any claims.

X. CHALLENGE 2: THE PETITION'S OBVIOUSNESS THEORY BASED ON WEAVER AND LEE053 (CLAIMS 6-8)

A. Lee053 Does Not Cure The Deficiencies of Weaver

129. I have applied the construction of "auxiliary" that means using its plain and ordinary meaning, which does not include primary and essential. The term "electrode" is also applied using its plain and ordinary meaning, which is an end structure of a conductor for making electrical contact." In my opinion, Lee053 fails to cure the fact that Weaver's bus line 430 is not an auxiliary electrode under the plain and ordinary meaning of the terms. *See* §IX.A.

B. No Motivation To Combine Weaver and Lee053

130. A POSITA would not combine Weaver and Lee053. Combining Weaver and Lee053 as proposed would modify the process.

131. There is no clear way to get around that ***the proposed modifications to Weaver would involve changing the process*** under the theory used by Dr. Baker. Dr. Baker was clear on the record that "a POSITA . . . wouldn't be able to mess with the process when designing the pixel." Ex. 2028, 120:16–18. He said a "POSITA is someone who designs optoelectronic systems. They take components. They put them together . . . A POSITA is not a person that is changing the process . . ." Ex. 2028, 139:22–140:2; *see also id.*, 123:24–124:5. When asked "Would it be possible for the

POSITA to increase the thickness or the cross-sectional area of the bus line 430?" Dr. Baker responded with "You can't." Ex. 2028, 120:6–9. Based on this, I understand Dr. Baker to have taken the position that a POSITA cannot increase the width of bus line 430, which would affect the cross-sectional area. On the other hand, if the width could in fact be changed, then there is no reason for the unnecessarily complex modifications proposed by Dr. Baker. Ex. 2028 at 123:22–124:5, 196:3–8. As I explain in Section XIX below, changing the width of the bus line alone would reduce the resistance of Weaver's bus line.

132. There is no structure in Weaver that corresponds to the "dummy wiring" of Lee053. As I discussed above in §VIII, Dr. Baker proposes a combination of Weaver and Lee053 that would result in via 428 extending **through** bus line 430. Ex. 1003, ¶130 (showing a modified Ex. 1004, Fig. 4).

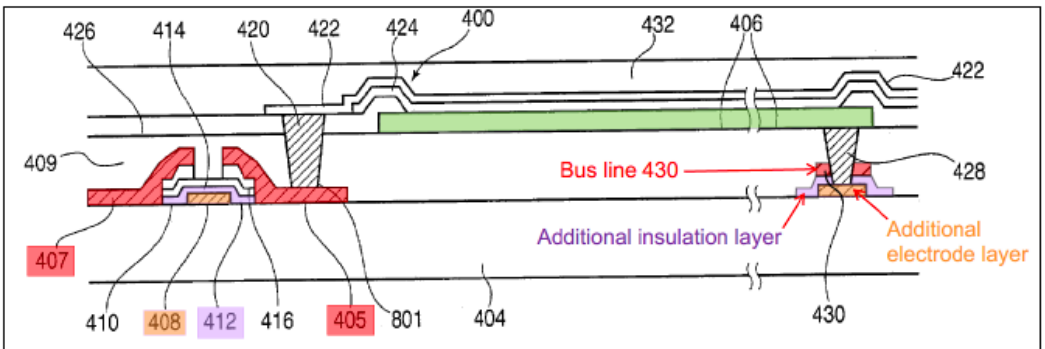

Fig. 4
(MODIFIED)

133. This proposed modification is clearly based on hindsight. As I discussed above in §VIII, bus line 430 is an etch stop, meaning it cannot be etched without changing the process. Further, the alternative to etching that Dr. Baker suggested (patterning around via 428) defeats the point of adding an additional layer—that is, bus line 430 extends around via in a horizontal direction and the width is increased. A POSITA would not use the manner proposed by Dr. Baker, and his attempt to salvage the position is based on hindsight.

XI. CHALLENGE 3: THE PETITION'S OBVIOUSNESS THEORY BASED ON WEAVER AND SONG (CLAIMS 6-8)

A. Song Does Not Cure the Deficiencies of Weaver

134. I have applied the term "auxiliary" in this section using its plain and ordinary meaning, which does not include primary and essential. I have applied the term "electrode" using its plain and ordinary meaning, which is an end structure of a conductor for making electrical contact. Song does not cure the fact that Weaver's bus line 430 is not an auxiliary electrode under the plain and ordinary meaning of the terms. *See* §IX.A.

B. No Motivation To Combine Weaver and Song

135. I note that Dr. Baker and Petitioner offer that Weaver and Song would result in an identical structure to that of Weaver and Lee053—this is plainly hindsight, as Lee053 and Song teach very different structures, which I have reproduced below. Song teaches that auxiliary electrode AE has several portions,

SE1, SE2, and SE3. *See id.*, ¶[0090]. Further, SE3 is "formed (or deposited) with a slope at the end" of the second electrode portion SE2. *Id.,* ¶[0094]. Lee053 has no such structure:

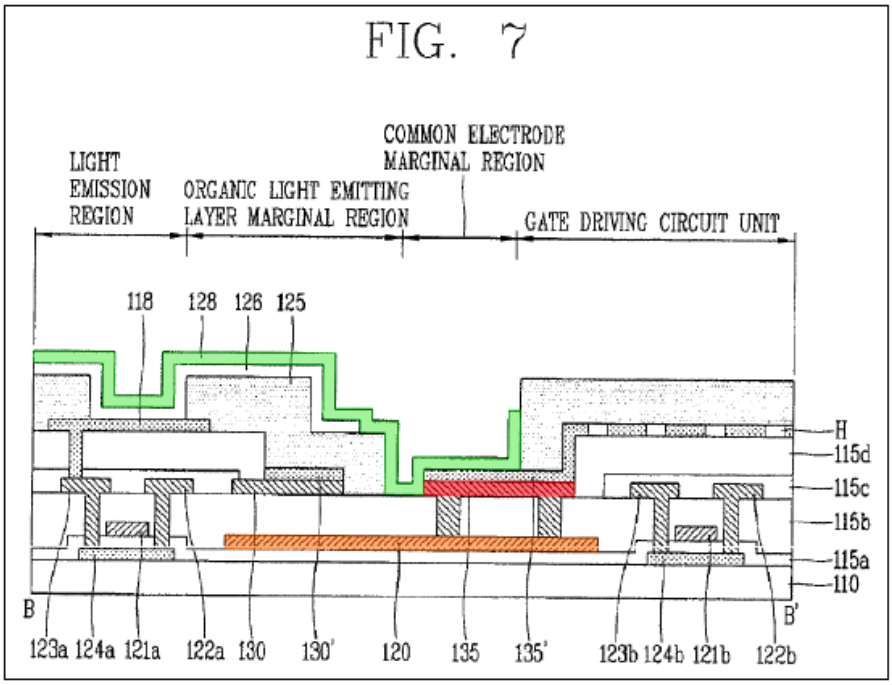

Ex. 1003, ¶124 (annotated Ex. 1005, Fig. 7, showing dummy wiring 120).

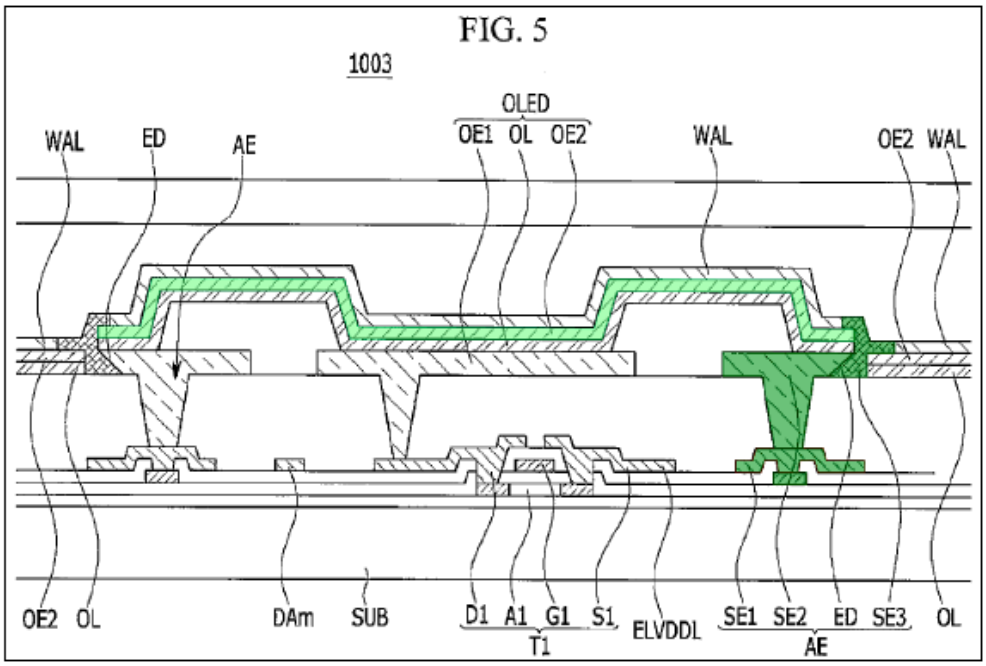

Ex. 1003, ¶64 (annotated Ex. 1006, Fig. 5, showing auxiliary electrode AE).

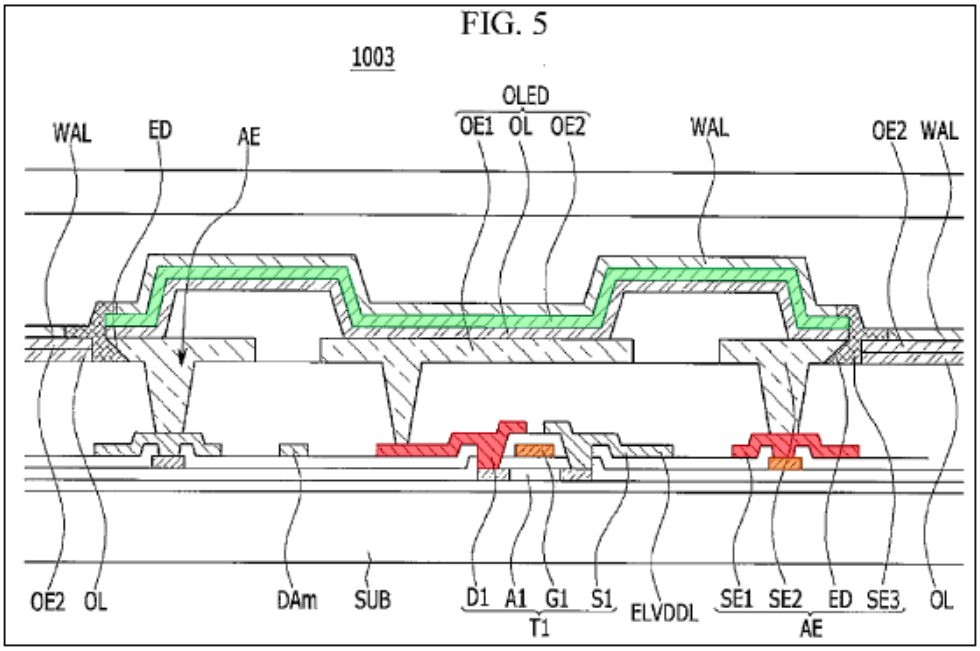

Ex. 1003, ¶151 (annotated Ex. , Fig. 5, breaking down SE1 into process steps saying "the first auxiliary electrode portion SE1 is formed of two sublayers (a top electrode layer and a bottom electrode layer)").

136. This is another example of hindsight. Dr. Baker selectively takes portions of Song's auxiliary electrode AE and disregards the overall structure—for example, he points to SE1 and ignores SE2 and SE3. The auxiliary electrode AE is a multilayered, complex structure, unlike Lee053's single layer of "dummy wiring". In my opinion, this is a hindsight-based attempt to map Song to the language of the claims and is not what a POSITA would have done based on Weaver and Song alone.

137. As I noted above in §§VIII and X.B, the proposed modification to Weaver in view of Song involves changing the process for the same reasons I discussed there.

138. Dr. Baker proposes that a combination of Weaver and Song would result in modified Figure 4 of Weaver to include an additional electrode layer in his declaration, and I have reproduced a copy below. Ex. 1003, ¶157 (showing a modified Fig. 4).

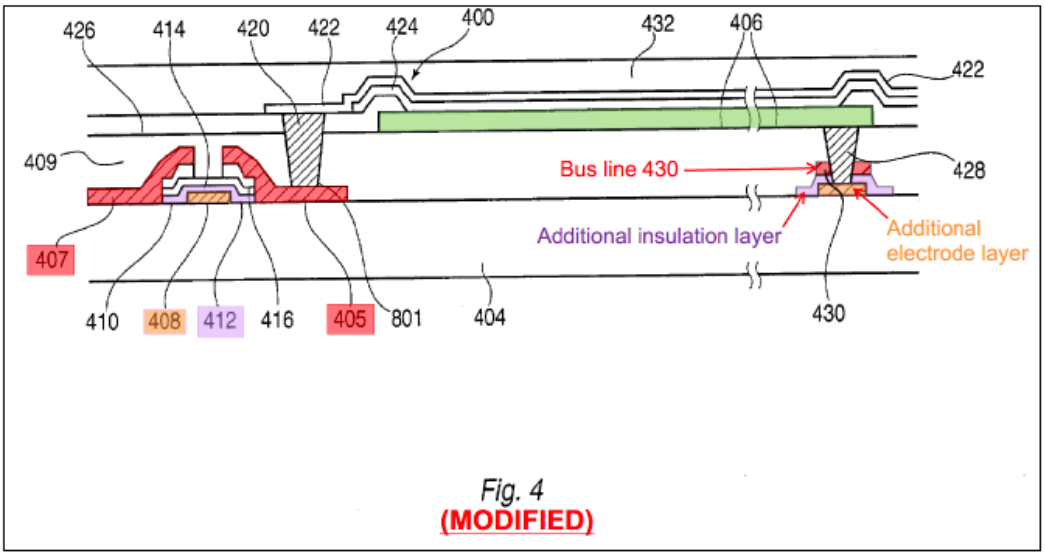

139. A POSITA would not make the proposed combination of Weaver and Song because it involves a change in the process by forming a via through the bus line 430. *See* §§VIII and X.B. Alternatively, if a POSITA had the ability to instead pattern bus line 430 via 428 thereby extending the effective width of bus line 430, a POSITA would have just extended the width of bus line 430 to add cross-sectional area, reducing resistance and stopping there, as I explain in Section XIX below. Indeed, nowhere does the Petition identify a motivation in Weaver and Song for reduced wiring widths and a POSITA would not have modified Weaver as proposed. *See* Petition at 46–47.

140. In my opinion, the only way a POSITA would have reached the proposed structure is with the use of hindsight.

XII. CHALLENGE 4: THE PETITION'S OBVIOUSNESS THEORY BASED ON WEAVER AND LEE 149 (CLAIMS 10-11)

A. Lee149 Does Not Cure the Deficiencies of Weaver

141. I have applied the term "auxiliary" in this section using its plain and ordinary meaning, which does not include primary and essential. I have applied the term "electrode" using its plain and ordinary meaning, which is an end structure of a conductor for making electrical contact. Lee149 does not cure the fact that Weaver's bus line 430 is not an auxiliary electrode under the plain and ordinary meaning of the terms. *See* §IX.A.

B. No Motivation to Combine

142. Dr. Baker yet again suggests a combination that has no basis except for hindsight. For example, Dr. Baker provided nothing other than a conclusory statement regarding how the proposed combination would be implemented. *See* Ex. 1003, ¶184.

143. As discussed above, it is my understanding that in assessing the obviousness of claimed subject matter, one should evaluate obviousness over the prior art from the perspective of one of ordinary skill in the art at the time the invention was made (and not from the perspective of either a layman or a genius in that art).

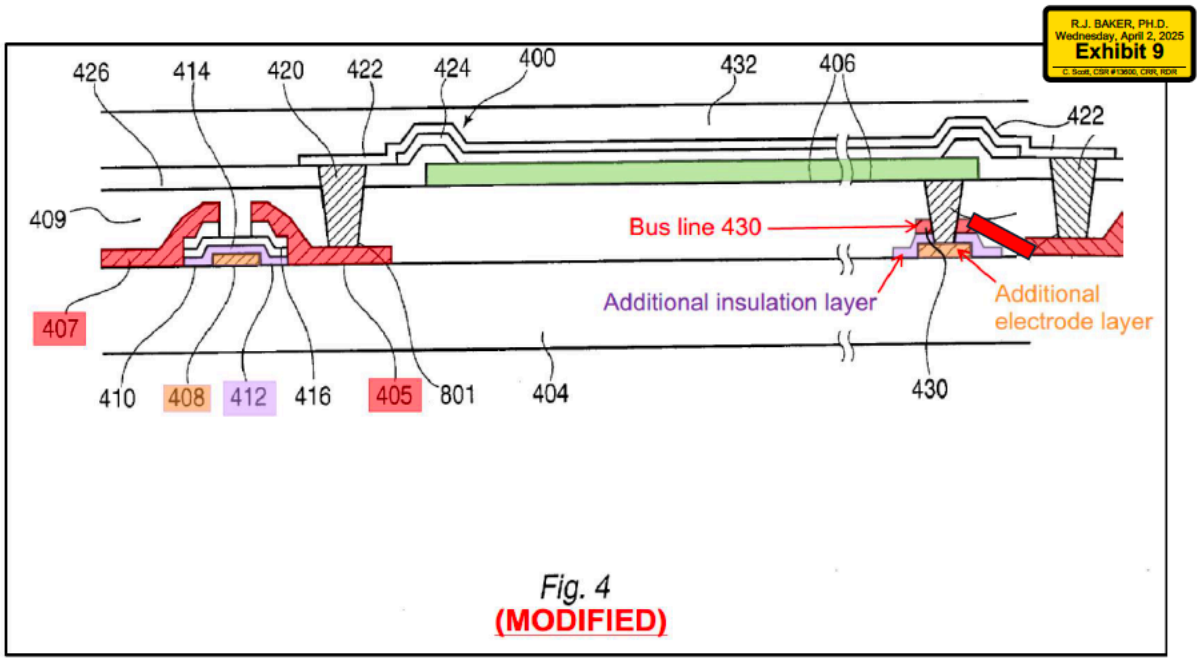

Ex. 2018 (Demonstrative exhibit 9 from Dr. Baker's deposition of the proposed combination of Weaver and Lee149); *See* Ex. 2022.

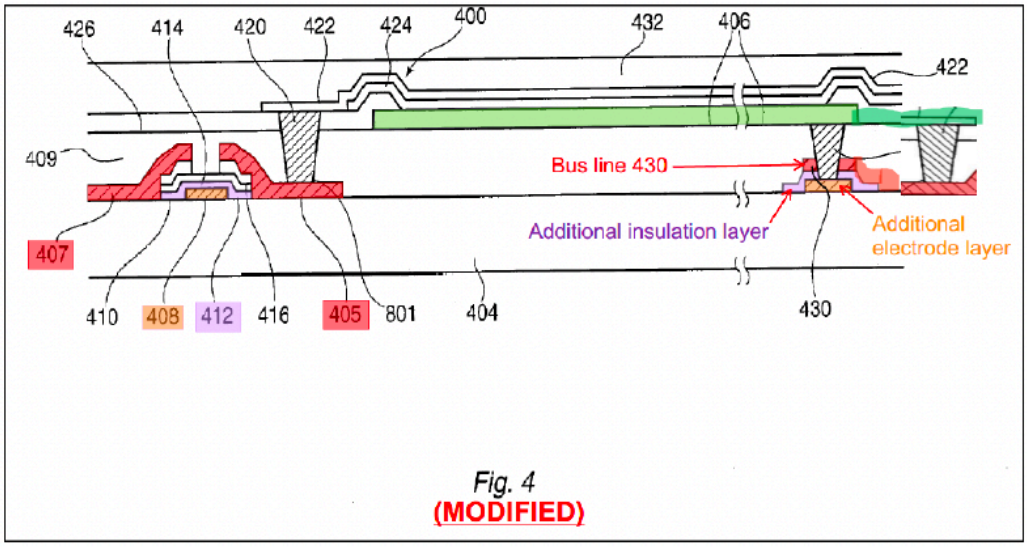

Ex. 2020 (Demonstrative exhibit 11 from Dr. Baker's deposition, correcting demonstrative exhibit 9); Ex. 2025.

144. These structures have the same flaws discussed in §VIII, X.B, and XI.B, regarding adding process steps to get through the etch stop bus line 430. Further, bus line 430 is plainly illustrated extending in width. Alternatively, if a POSITA had the ability to instead pattern bus line 430 via 428 thereby extending the effective width of bus line 430, a POSITA would have just extended the width of bus line 430 to add cross-sectional area, reducing resistance and stopping there, as I explain in Section XIX below. Dr. Baker offers no explanation why a POSITA would be motivated to add an additional insulation layer and additional electrode layer in addition to extending the width of bus line 430. Indeed, that is because a POSITA would not be motivated to make this combination. Once again, the

proposed structure is based purely on hindsight and a desire to invalidate the claims of the '509 Patent.

145. I note that Dr. Baker demonstrated his reliance on hindsight to create the resultant structures here. *See* Ex. 2028, 197:2–14 ("Q[:] So to the extent that any other modifications you think are necessary and obvious, let me know now; otherwise, I will PDF this and get it committed as an exhibit. A[:] Well, just one sec. I mean, Claim 11 teaches using the material 422. So you don't have an additional layer. So it'd probably be better to cover both Claims 10 and 11 with the modification, and you can easily do that by getting rid of the red box and just – or moving the red box to where it's on the same layer as 422 and then just extending it down to the -- yeah, kind of.").

146. In my opinion, the proposed structure is based purely on the hindsight, not on what a POSITA would have been motivated to do based on the art itself.

XIII. CHALLENGE 5: THE PETITION'S OBVIOUSNESS THEORY BASED ON WEAVER AND BAE (CLAIMS 10-11)

A. Bae Does Not Cure the Deficiencies of Weaver

147. I have applied the term "auxiliary" in this section using its plain and ordinary meaning, which does not include primary and essential. I have applied the term "electrode" using its plain and ordinary meaning, which is an end structure of a conductor for making electrical contact. Bae does not cure the fact that Weaver's

bus line 430 is not an auxiliary electrode under the plain and ordinary meaning of the terms. *See* §IX.A.

B. No Motivation to Combine

148. It is my opinion that it would not have been obvious to combine Weaver and Bae to produce the structure of claims 10–11 of '509 Patent. Again, Dr. Baker provides only a conclusory paragraph describing how the combination of Weaver and Bae would be implemented. *See* Ex. 1003, ¶ 202. When asked to depict the resulting figure, Dr. Baker came up with the following image:

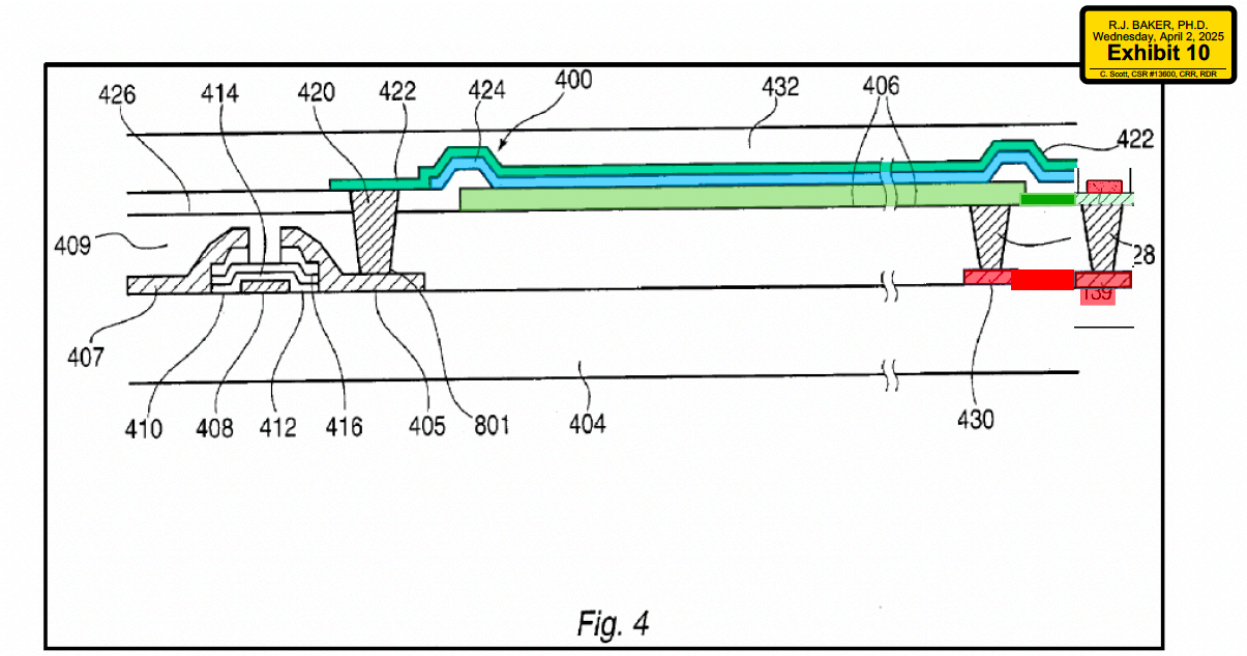

EX2019 (Demonstrative exhibit 10 from Dr. Baker's deposition of the proposed combination of Weaver and Bae); EX2028, 202:18–209:15; *see* Ex. 2024; Ex. 2025.

149. This structure showcases the shortcomings described in §VIII, as it openly demonstrates the feasibility of increasing the width of bus line 430. Further,

while creating this structure, Petitioner's expert openly demonstrates his use of hindsight on the record. Ex. 2024; Ex. 2025; Ex. 2028, 205:18–22 ("For Claim 11, I think it requires that the -- let me read Claim 11."); *see also id.*, 197:2–14 ("Q[:] So to the extent that any other modifications you think are necessary and obvious, let me know now; otherwise, I will PDF this and get it committed as an exhibit. A[:] Well, just one sec. I mean, Claim 11 teaches using the material 422. So you don't have an additional layer. So it'd probably be better to cover both Claims 10 and 11 with the modification, and you can easily do that by getting rid of the red box and just – or moving the red box to where it's on the same layer as 422 and then just extending it down to the -- yeah, kind of."), 206:16 ("Hold on, let me look at the claim language"), 206:20–12 (". . . let me read them, read the claim again."). Dr. Baker's structure is unclear and stands in contrast with the teachings of Bae, which disclose that a second electrode is formed on top of another electrode without any intervening material. Ex. 1012 ¶ [0030].

150. Petitioner's proposed combination is based entirely on hindsight and is not what a POSITA would have done with only the teachings of the references of Weaver and Bae.

XIV. CHALLENGE 6: THE PETITION'S OBVIOUSNESS THEORY BASED ON WEAVER AND GUPTA OR HAN (CLAIMS 1-5, 9, AND 12-13)

A. Still Lacking Auxiliary Electrode

151. I have applied the term "auxiliary" in this section using its plain and ordinary meaning, which does not include primary and essential. I have applied the term "electrode" using its plain and ordinary meaning, which is an end structure of a conductor for making electrical contact. Gupta or Han do not change the fact that Weaver's bus line 430 is not an auxiliary electrode under the plain and ordinary meaning of the terms. *See* §IX.A.

B. No Motivation to Combine

152. This ground is yet another example of the hindsight required to arrive at the language of the claims of the '509 Patent. The Petition just states that it would have been obvious to connect bus line 430 and anode 406 in parallel to the VDD line of Weaver because a "POSITA would have been motivated to implement the solution of Gupta or Han in the Weaver device to lower the resistance and voltage drop between anode 406 and the VDD line of Weaver," and that "[t]his is consistent with the teachings of Weaver, which discloses concerns about non-uniformities caused by voltage drops across the OLED, and using highly conductive material (indium tin oxide – ITO) for the anode 406 and the bus line 430." Petition at 75 (citing Ex. 1004, [0017], [0030], [0034], [0036]) (color in original).

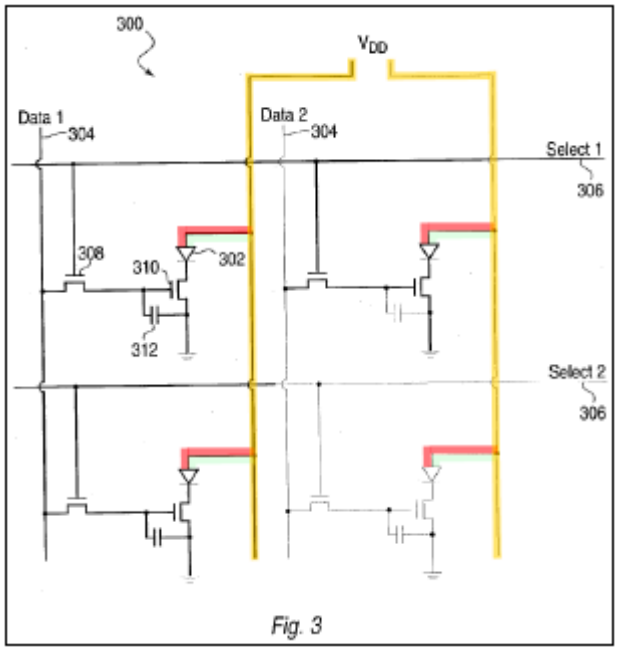

Id. (showing a modified Fig. 3 of Weaver).

153. This is a misleading assertion. Even assuming a POSITA looked at Weaver and wanted to lower the resistance, the POSITA would not have been motivated to implement the teachings of Gupta or Han because it would involve changing the process and a POSITA could have implemented a change to Weaver that would not involve a redesign of the structure. Instead, a POSITA would have at most made the modifications that I discuss below in Section XIX.

154. The annotated circuit schematic of Weaver above is misleading and is matched with the corresponding annotated structure (reproduced) below, with no modifications depicted to the structure of Weaver. *See* Petition at 76–77.

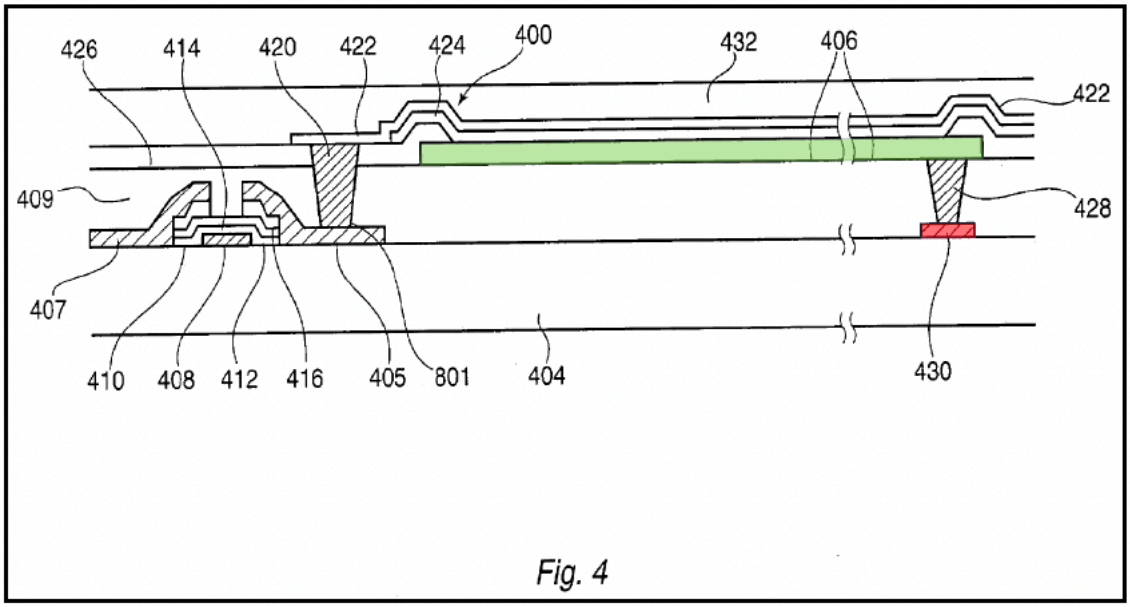

155. The lack of modifications depicted in Weaver seems to illustrate that no modifications would be required. This is not the case. It would not be as simple as connecting the anode to the VDD line—that would require a significant redesign of Weaver's structure. To the extent the Petition is suggesting that Weaver discloses that bus line 430 and anode 406 are both connected to VDD, that position is wholly unsupported by the teachings of Weaver and would have been contrary to a POSITA's understanding of the structure of Weaver. *See, e.g.*, IX.A (describing how a POSITA understood Weaver); Ex. 1004.

156. Assuming a POSITA wanted to lower the resistance of Weaver, they would have done so by either increasing the width of bus line 430 (which would not require a redesign of the structure) or would change the material of the bus line

(which was a known, routine solution in the art and did not require a redesign of the structure of Weaver).

157. Petitioner misleadingly states that Weaver "us[es] highly conductive material (indium tin oxide – ITO) for the anode 406 and the bus line 430." This statement is partially true. ITO is highly conductive, but only *for a transparent material*—Petitioner's expert noted that a "typical material [for bus line 430] would be . . . aluminum . . . [or] copper" and that the resistivity of ITO is orders of magnitude higher than copper and aluminum. Ex. 2028, 120:19–23, 121:13–124:13, 214:24–215:5 ("[Q:] In what cases would a POSITA select to use ITO over aluminum or copper? A[:] When you need the light to shine through the material. . . ITO is commonly used in displays because . . . it can be transparent to light.").

158. Bus line 430 would not need to be transmissive to light. Thus, there is no reason a POSITA who was looking to reduce the resistance of Weaver's structure would have considered anything other than swapping out the material of the bus line 430 from ITO to aluminum or copper, as was known to do to increase conductivity.

C. Han Is Not Analogous Art, and Gupta's Resistor is Not an Electrode

159. Han is not analogous art, and no POSITA would have thought to combine Han with Weaver. Han is directed to large area flat panel light sources. Ex. 1010, ¶[0003] ("The present invention relates to an organic-light emitting-diode (OLED) flat-panel light-source apparatus and, more particularly, to an OLED flat-

panel light-source apparatus and a method of manufacturing the same, which may improve the uniformity of electrical and optical properties of a ***large-area*** OLED flat-panel light-source apparatus required for an illumination system and a display device."). Large area flat panel light sources have significantly different design considerations than pixels in a display, due in large part to the relative size differences. For example, because the flat panel light sources are so large, branched electrodes were used to increase the contacts within the light source to help with uniformity and current distribution. This can be seen in Han's Figure 8, which shows the emission region corresponding to Fig. 7A. While this is beneficial when the relative size of the OLED is inches, not millimeter or smaller, the design is not required or used for pixels for in LED displays due to their significantly smaller size. POSITAs at the time of the invention (and even today) would have understood that the uniformity and current distribution concerns at the inch-scale do not similarly apply at the sub-millimeter-scale for pixels of LED displays. If a POSITA were instructed to apply Han's teachings about branched electrodes to Weaver, the POSITA would do something like this to repeat Weaver's bus line several times for improved current distribution:

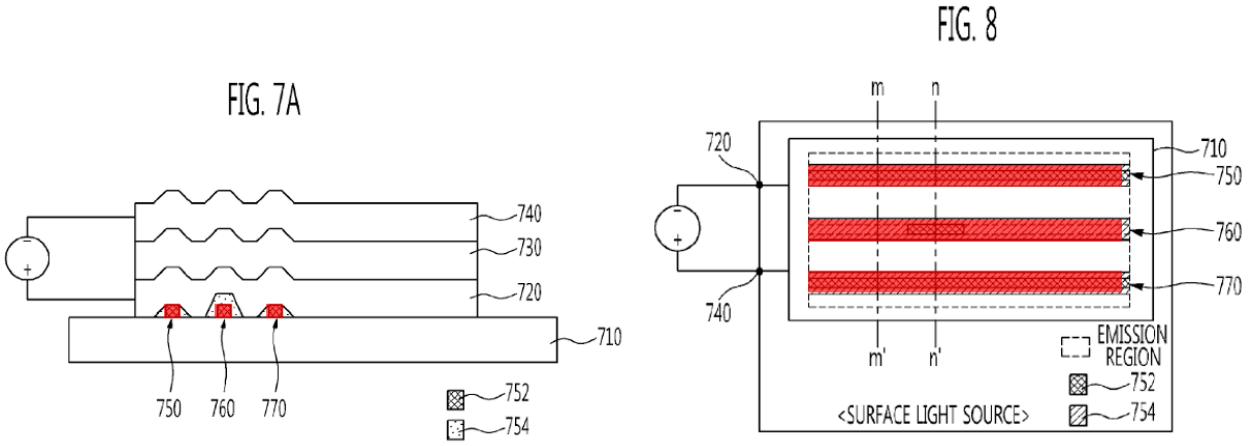

Ex. 1010 (annotated to show branching electrodes in Fig. 7A and Fig. 8).

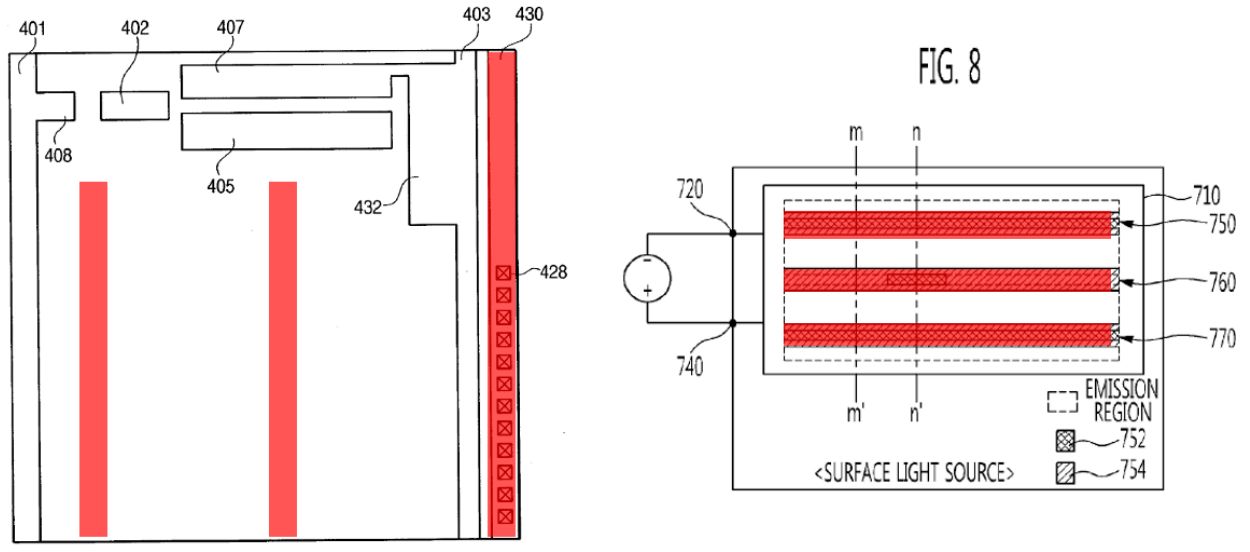

Fig. 6

Ex. 1004, Fig. 6 (Weaver modified to include branching electrodes from Han Fig. 8).

160. Separately, a POSITA would not have considered Gupta's resistor to be an electrode. Putting a resistor in parallel with a bus line simply results in just that: a resistor and a bus line, neither of which are electrodes under the construction in Section VII(B) above. To the extent Gupta discloses a "resistor," "[t]he resistor

238 may be formed of a conductive mesh or strip, which is added to the non-emissive region." Ex. 1009, 7:40–47. This resistor mesh 238 is show in Gupta's Figures 3A and 3B, as well as in Figures 4A-4D.

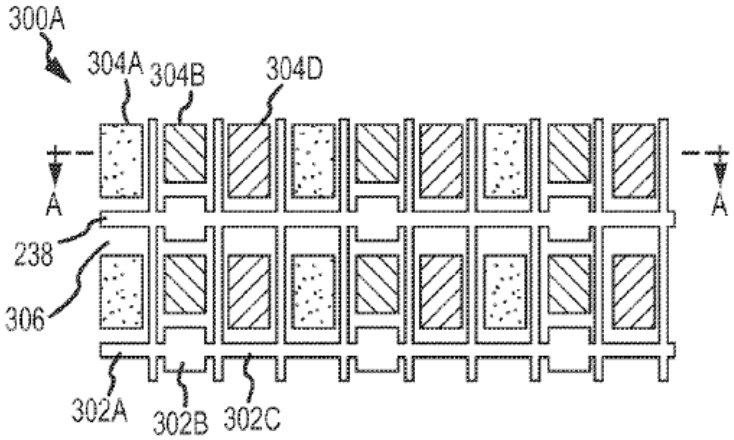

FIG.3A

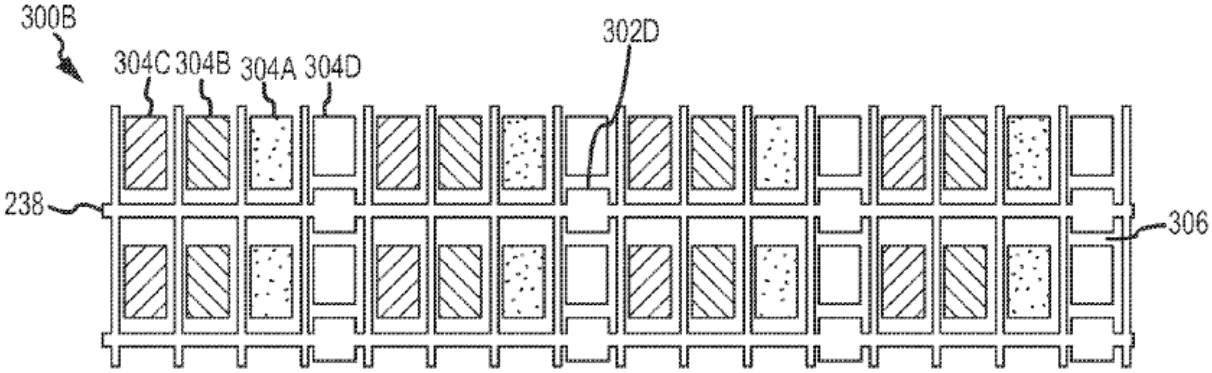

FIG.3B

Ex. 1009 at Figs. 3A-B. Notably, the Petition is silent about how this type of mesh can be added to Weaver's device, especially how this can be done without changing the fabrication process. The Petition does not show any possible way that this mesh can be added to Figure 4 of Weaver. Petition at 72–77. A POSITA would have

understood that additional separate fabrication step would be used to add the mesh if it could have been done at all.

XV. CHALLENGE 7: THE PETITION'S OBVIOUSNESS THEORY BASED ON WEAVER AND LEE053, AND GUPTA OR (CLAIMS 6-8)

161. Dr. Baker and Petitioner provide no new reasoning for this ground. Accordingly, the combination must fail for at least the reasons set forth in §§X and XIV.

XVI. CHALLENGE 8: THE PETITION'S OBVIOUSNESS THEORY BASED ON WEAVER AND SONG, AND GUPTA OR HAN (CLAIMS 6-8)

162. Dr. Baker and Petitioner provide no new reasoning for this ground. Accordingly, the combination must fail for at least the reasons set forth in §§XI and XIV.

XVII. CHALLENGE 9: THE PETITION'S OBVIOUSNESS THEORY BASED ON WEAVER AND LEE149, AND GUPTA OR HAN FAILS TO DISCLOSE ALL ELEMENTS OF CLAIMS 10-11

163. Dr. Baker and Petitioner provide no new reasoning for this ground. Accordingly, the combination must fail for at least the reasons set forth in §§XII and XIV.

XVIII. CHALLENGE 10: THE PETITION'S OBVIOUSNESS THEORY BASED ON WEAVER AND BAE, AND GUPTA OR HAN (CLAIMS 10-11)

164. Dr. Baker and Petitioner provide no new reasoning for this ground. Accordingly, the combination must fail for at least the reasons set forth in §§XIII and XIV.

XIX. HINDSIGHT-FREE MODIFICATION TO WEAVER

165. It is my opinion that if a POSITA were in fact motivated to reduce the resistance along the bus line of Weaver, a POSITA would have simply made the bus line wider. A POSITA would have done so after considering the appropriate equation for resistance, $R = \rho L/A$, where R is resistance, ρ is resistivity, L is length, and A is the cross-sectional area. This is a basic equation taught in freshman engineering and physics classes. The POSITA could have simply increased the cross-sectional area A of the bus line by making it thicker or wider. I show this in the figures below based on an excerpt of Figure 4 of Weaver:

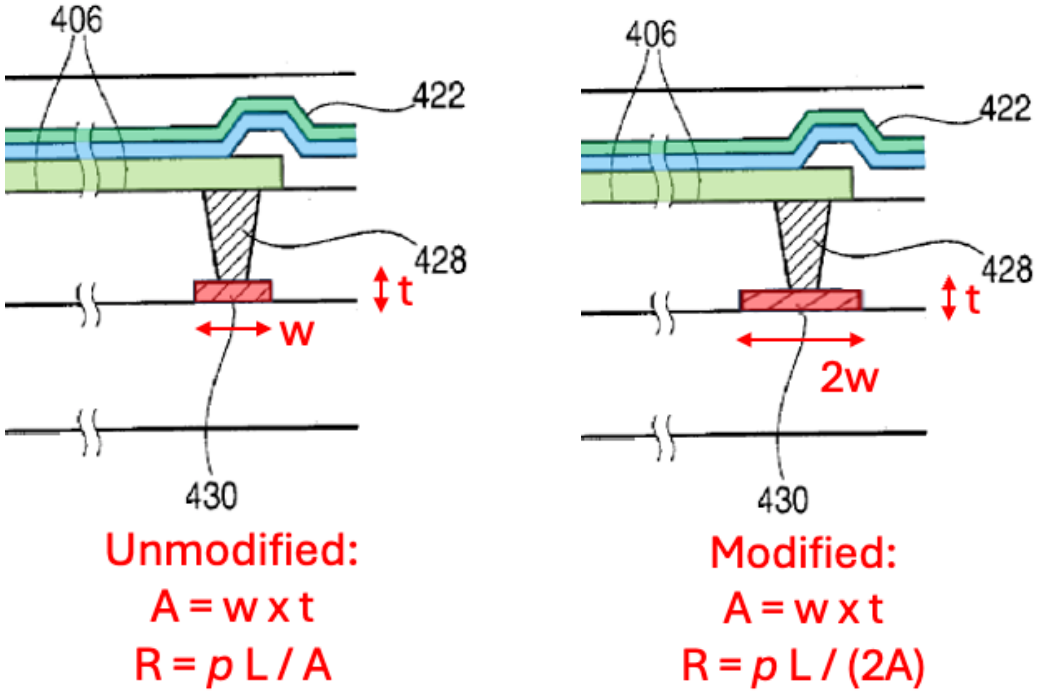

$$R = \rho \frac{L}{A}$$

166. A typical engineer designing a pixel would have had the freedom to do this—designing features of a pixel to have different sizes, shapes, and arrangements is a fundamental and basic part of pixel design. Engineers do face minimum design constraints (e.g., a feature cannot be made less than a particular size). These design constraints do not prevent engineers from designing features to be bigger, and an engineer would have the ability to make the bus line wider. I also disagree with Dr. Baker that this would be a change to the fabrication process that is not permitted. At minimum, Weaver's bus line could have easily been made wider if a POSITA's motivation was to decrease the resistance of the bus line. Ex. 2028, 123:19–124:5. Even if this made the pixel marginally bigger, it would have been an acceptable

trade-off. However, as illustrated above, this modification would not necessarily have made the pixel bigger at all because the width can be extended within the pixel. Thus, my opinion is that a POSITA who was motivated to reduce the resistance of Weaver's pixel structure would have widened the bus line instead of making any of the modifications or combinations proposed by Dr. Baker, which add unnecessarily complexity that decrease yield and increase cost because they require making extra, unnecessary features, all of which have costs and increase the potential for fabrication errors.

XX. CONCLUSION

167. In signing this Declaration, I understand that the Declaration will be filed as evidence in contested cases before the Patent Trial and Appeal Board of the United States Patent and Trademark Office. I acknowledge that I may be subject to cross-examination in this case and that cross examination will take place within the United States. If cross examination is required of me, I will appear for cross examination within the United States during the time allotted for cross examination.

168. I declare that all statements made herein of my own knowledge are true and that all statements made on information and belief are believed to be true; and further that these statements were made with the knowledge that willful false statements and the like so made are punishable by fine or imprisonment, or both,

under Section 1001 of Title 18 of the United States Code, and that such willful false statements may jeopardize the validity of the 842 Patent.

Executed on April 23, 2025 at Flower Mound, TX.

Eric Bretschneider, Ph.D.

169.