UNITED STATES PATENT AND TRADEMARK OFFICE

BEFORE THE PATENT TRIAL AND APPEAL BOARD

BOE Technology Group Co., LTD.
Petitioner

v.

Optronic Sciences LLC
Patent Owner

Inter Partes Review No.: IPR2024-01134

PETITION FOR INTER PARTES REVIEW OF U.S. PATENT NO. 9,406,733 UNDER 35 U.S.C. §§ 311-319 AND 37 C.F.R. §§ 42.1-100, ET SEQ

TABLE OF CONTENTS

Page

I. INTRODUCTION 1
II. STATEMENT OF PRECISE RELIEF REQUESTED 1
III. THE 733 PATENT 1
A. Overview of the 733 Patent 1
B. Person of Ordinary Skill in the Art 3
C. Claim Construction Under 37 C.F.R. § 42.104(b)(3) 3
1. "auxiliary electrode" (claims 1-2, 4-5) 3
2. "disposed at a side of" (claims 1 and 4) 6
IV. OVERVIEW OF THE PRIOR ART REFERENCES 9
A. EX1004 - Hekmatshoar 9
B. EX1005 - Lee 9
C. EX1006 - Weaver 9
D. EX1007 - Gupta 10
E. EX1008 - Han 10
V. GROUND 1: CLAIM 1 ANTICIPATED BY HEKMATSHOAR 10
A. Claim 1 10
1. [1pre] 10
2. [1a] 11
3. [1b] 12
4. [1c] 14
5. [1d] 15
6. [1e] 16
7. [1f] 17
8. [1g] 19
VI. GROUND 2: CLAIMS 1-5 RENDERED OBVIOUS BY LEE IN VIEW OF HEKMATSHOAR OR WEAVER 22
A. Combination Rationale 22

B. Claim 1 25
1. [1pre] 25
2. [1a] 25
3. [1b] 27
4. [1c] 30
5. [1d] 32
6. [1e] 32
7. [1f] 33
8. [1g] 35
C. Claim 2 39
1. [2pre] 39
2. [2a] 39
3. [2b] 40
D. Claim 3 44
E. Claim 4 46
1. [4pre] 46
2. [4a] 46
3. [4b] 48
F. Claim 5 51
VII. GROUND 3: CLAIM 1 RENDERED OBVIOUS BY HEKMATSHOAR IN VIEW OF GUPTA OR HAN 53
A. Claim 1 53
1. [1pre] 53
2. [1a] 53
3. [1b] 53
4. [1c] 53
5. [1d] 53
6. [1e] 53
7. [1f] 54

8. [1g] 54
VIII. DISCRETIONARY DENIAL IS NOT WARRANTED 60
A. 35 U.S.C. § 314(a) Analysis 60
1. Stay 60
2. Trial Date 60
3. Parallel Proceeding 61
4. Issue Overlap 61
5. Same Party 61
6. Other Considerations 61
B. 35 U.S.C. § 325(b) Analysis 62
IX. COMPLIANCE WITH FORMAL REQUIREMENTS 62
A. Mandatory Notices Under 37 C.F.R. §§ 42.8(b)(1)-(4) 62
1. Real Party-In-Interest 62
2. Related Matters 62
3. Lead and Backup Counsel 63
4. Service Information 63
B. Proof of Service on the Patent Owner 63
C. Power of Attorney 63
D. Standing 64
E. Fees 64
X. CONCLUSION 64

INDEX OF EXHIBITS

Exhibit No.	Description
1001	U.S. Patent No. 9,406,733
1002	File History of U.S. Patent No. 9,406,733
1003	Declaration of R. Jacob Baker, Ph.D., P.E.
1004	"A novel TFT-OLED integration for OLED-independent pixel programming in amorphous-Si AMOLED pixels," Bahman Hekmatshoar et al., Society for Information Display, 2008 ("Hekmatshoar")
1005	U.S. Patent Publication No. 2009/0015149 ("Lee")
1006	U.S. Patent Publication No. 2004/0079945 ("Weaver")
1007	U.S. Patent 9,088,003 ("Gupta")
1008	U.S. Patent Publication No. 2011/0248309 ("Han")
1009	File History of U.S. Patent Application 13/842,879
1010	Wiley Electrical and Electronics Engineering Dictionary (2004)

CHART OF CLAIMS
[1pre] A pixel structure, comprising:
[1a] a data line and a scan line;
[1b] at least one active device electrically connected with the data line and the scan line;
[1c] a light emitting device electrically connected with the active device, wherein the light emitting device comprises:
[1d] a first electrode layer;
[1e] a light emitting layer disposed on the first electrode layer; and
[1f] a second electrode layer disposed on the light emitting layer, wherein the second electrode layer is electrically connected with the active device; and
[1g] an auxiliary electrode electrically insulated from the active device and disposed at a side of the light emitting device, wherein the auxiliary electrode is electrically connected with the first electrode layer of the light emitting device.
[2pre] The pixel structure according to claim 1, further comprising:
[2a] a first insulating layer covering the active device, and the first electrode layer of the light emitting device being disposed on the first insulating layer;
[2b] a second insulating layer covering the first insulating layer and the first electrode layer of the light emitting device, and the second electrode layer of the light emitting device being disposed on the second insulating layer, wherein the second insulating layer has an opening and a first contact window opening that expose the first electrode layer, and the light emitting layer of the light emitting device is disposed in the opening and the auxiliary electrode is electrically connected with the first electrode layer via the first contact window opening.
[3] The pixel structure according to claim 2, wherein the first insulating layer and the second insulating layer further comprise a second contact window opening that exposes a portion of the active device, and the second electrode layer of the light emitting device is electrically connected with the active device via the second contact window opening.
[4pre] The pixel structure according to claim 1, further comprising:
[4a] a first isolating structure disposed around the second electrode layer of the light emitting device, wherein a first gap exists between the second electrode layer and the first isolating structure; and
[4b] a second isolating structure disposed at a side of the first isolating structure, wherein the auxiliary electrode is disposed between the first isolating structure and the second isolating structure, and the auxiliary electrode is electrically insulated from the first isolating structure and the auxiliary electrode is electrically insulated from the second isolating structure.

[5] The pixel structure according to claim 1, wherein the auxiliary electrode and the second electrode layer of the light emitting device belong to the same layer, and the auxiliary electrode is electrically insulated from the second electrode layer of the light emitting device.

I. INTRODUCTION

BOE Technology Group Co. LTD. ("Petitioner") requests *inter partes* review of claims 1-5 ("Challenged Claims") of U.S. Patent No. 9,406,733 ("733 patent," EX1001), owned by Optronic Sciences LLC ("PO").

This petition relies upon the declaration of R. Jacob Baker, Ph.D., P.E. (EX1003), and copies large portions of that declaration herein.

II. STATEMENT OF PRECISE RELIEF REQUESTED

In accordance with 35 U.S.C. § 311, Petitioner requests cancelation of claims 1-5 of the 733 patent in view of the following grounds:

Ground	Claims	Stat. Basis	Prior Art
1	1	35 U.S.C. § 102	Hekmatshoar
2	1-5	35 U.S.C. § 103	Lee in view of Hekmatshoar or Weaver
3	1	35 U.S.C. § 103	Hekmatshoar in view of Gupta or Han

III. THE 733 PATENT

A. Overview of the 733 Patent

The 733 patent is directed to a pixel structure for solving the purported problem of poor overall luminous uniformity that occurs in traditional electroluminescent devices. EX1001, 1:48-50. The 733 patent discloses a pixel structure 100 that includes a data line DL, a scan line SL, active device T1, active device T2, a capacitor CS, a power line PL, and a light emitting device 130. *Id.*, 2:65-3:1 and Fig. 1.

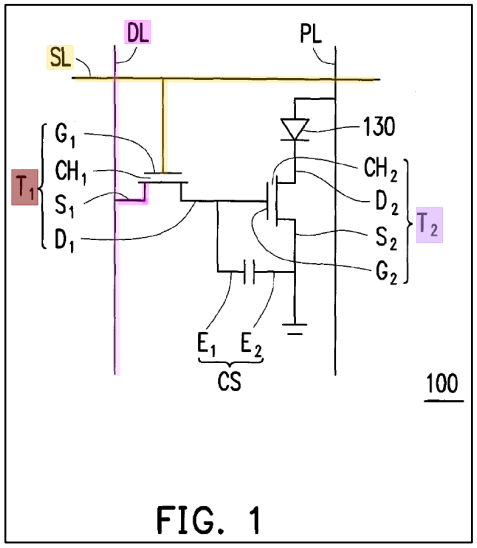

FIG. 1

The light emitting device 130 includes a first electrode layer 132, a light emitting layer 134, and a second electrode layer 136. *Id.*, 4:36-38. The purported novelty is the inclusion of a second auxiliary electrode 460 that is electrically connected with the first electrode layer 132 and disposed at a side of the light emitting device 130. *Id.*, 8:4-13; Fig. 6.

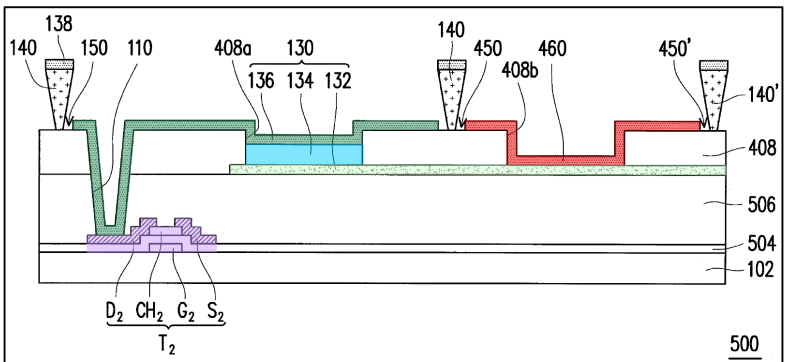

FIG. 6

B. Person of Ordinary Skill in the Art

A person of ordinary skill in the art ("POSITA") at the time of the alleged invention of the 733 patent (September 12, 2013) would have had a Bachelors' degree in electrical engineering or a comparable field of study, plus approximately one or more years of professional experience with electronic and optoelectronic system design. Additional graduate education could substitute for professional experience, and significant experience in the field could substitute for formal education. EX1003, ¶46.

C. Claim Construction Under 37 C.F.R. § 42.104(b)(3)

The Challenged Claims are interpreted using the same claim construction standard that is used to construe the claim in a civil action in federal district court. 37 C.F.R. § 42.100(b).

Petitioner does not contend that its proposed constructions are complete constructions of these limitations or the claims for any other purpose, including for issues that may arise in the related litigation.

Any claim terms not listed below should be construed according to their plain and ordinary meaning to a POSITA at the time of the 733 patent.

1. "auxiliary electrode" (claims 1-2, 4-5)

"Auxiliary electrode" should be construed either broadly as "supplemental electrode" or narrowly as "supplemental electrode to reduce the total resistance of

the pixel structure." EX1003, ¶¶55-59. The broad construction is applied in Grounds 1-2 and the narrow construction is applied in Grounds 2-3.

The claims do not explicitly state what the "auxiliary electrode" is auxiliary to, i.e., the claims do not explicitly recite what function or characteristic existed without the auxiliary electrode that has been supplemented with the auxiliary electrode. If the absence of this recitation in the claim sufficiently begs the question such that a POSITA would have turned to the specification to understand the nature of the claimed "auxiliary electrode," or if other statements in the specification sufficiently limit the term, then a narrow construction is appropriate. The prosecution history provides no guidance on this issue.

In support of the broad construction, the plain meaning of "auxiliary" is "supplemental" and is not limited to any particular type of supplemental functionality. EX1010, p. 51 ("supplementary" or "supplemental" included in each of the definitions of "auxiliary anode," "auxiliary channel," "auxiliary circuit," "auxiliary contacts," "auxiliary device," "auxiliary equipment," "auxiliary function," "auxiliary power," "auxiliary relay"). In the Summary of the Invention section, the 733 patent includes the following sentence:

> Based on the above, in the pixel structure of the invention, the first electrode layer of the light emitting device is electrically connected with the auxiliary electrode.

EX1001, 2:15-17. The Description of the Embodiments section contains similar statements. *Id.*, 4:47-49, 5:63-6:4, 6:53-58; 7:1-5 and 43-45. These statements are consistent with the broad construction that encompasses any supplemental electrode for any purpose. EX1003, ¶57.

In support of the narrow construction, the 733 patent follows the above sentence in the Summary of the Invention section with the following:

> Therefore, the design of the invention that coordinates the first electrode layer of the light emitting device with the auxiliary electrode decreases the resistance of the first electrode layer though parallel connection, <u>so as to significantly reduce the total resistance of the pixel structure</u>, thereby improving the overall luminous uniformity of the display panel.

EX1001, 2:15-23. The Description of the Embodiments section contains similar statements. *Id.*, 5:63-6:8; 7:45-56. To the extent a POSITA reads the claim and finds "auxiliary" ambiguous, such that the POSITA would turn to the specification to understand what makes the claimed auxiliary electrode "auxiliary," these statements would resolve that ambiguity and would limit the claim. Additionally, these statements refer to "the invention" and can limit the term for that reason as well. However, it should be noted that each of the two statements in the Description of the Embodiments section cited above is followed by the explicit disclaimer that "the invention is not limited thereto." *Id.*, 6:8-9; 7:56-57.

Petitioner does not include "decreases the resistance of the first electrode layer" or "decreases the resistance of the first electrode layer through parallel

connection" in the proposed narrow construction because a POSITA would have known that adding an auxiliary electrode cannot literally perform that function. The first electrode layer has a resistance determined by its physical properties (material, dimensions, etc.), which cannot be changed by adding an electrode (even if connected in parallel). A POSITA would have understood that adding an electrode connected in parallel with the first electrode would decrease the resistance of the combined parallel circuit by allowing current to flow in parallel through the first electrode and the added electrode, but would not reduce the resistance of the first electrode itself. Thus, a POSITA would have interpreted this passage in the specification as imprecisely referring to the concept of reducing overall resistance, not the impossibility of reducing the resistance of the unaltered first electrode itself. A construction that literally requires that the auxiliary electrode reduce the resistance of the first electrode itself is not disclosed or enabled by the 733 patent. EX1003, ¶59.

2. "disposed at a side of" (claims 1 and 4)

This phrase should be construed to mean "overlaps in the horizontal direction." EX1003, ¶¶60-63. The '733 patent does not provide a specific definition for this claim term but gives two examples of claim elements being disposed at a side of another claim element. First, the '733 patent discloses that the second auxiliary electrode 460 is "located at a side of the light emitting device

130." EX1001, 7:1-5. Second, the '733 patent discloses that "a second isolating structure 140' that is located at a side of the first isolating structure 140." *Id.*, 7:22-26. In both cases, the elements at issue overlap in the horizontal direction. *Id.*, Fig. 6.

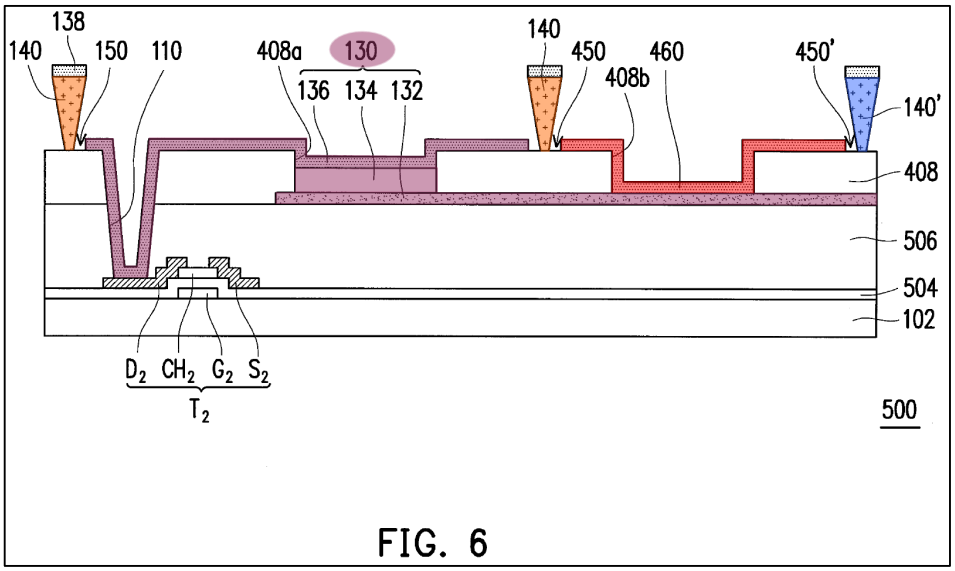

Therefore, "disposed at a side of" should be construed to mean "overlaps in the horizontal direction." EX1003, ¶60.

In the context of claim 1, this phrase means the auxiliary electrode "overlaps in the horizontal direction" with the light emitting device (LED). This phrase should not be interpreted to include a negative limitation that precludes the auxiliary electrode from also vertically overlapping with some part of the LED. This is a comprising claim, so the auxiliary electrode could do both.

Any construction that precludes any amount of overlap in the vertical direction, or requires complete overlap in the horizontal direction, should be

rejected because it would exclude all disclosed embodiments. In the only two embodiments of the 733 patent that include the second auxiliary electrode 460 "at a side" of the light emitting device 130 (which is defined as first electrode layer 132, light emitting layer 134 and second electrode layer 136), there is partial vertical overlap of the second auxiliary electrode 460 and the first electrode layer 132 of the light emitting device 130 (i.e., a portion of the second auxiliary electrode 460 is formed on a portion of the first electrode layer 132). EX1001, Figs. 5 and 6.

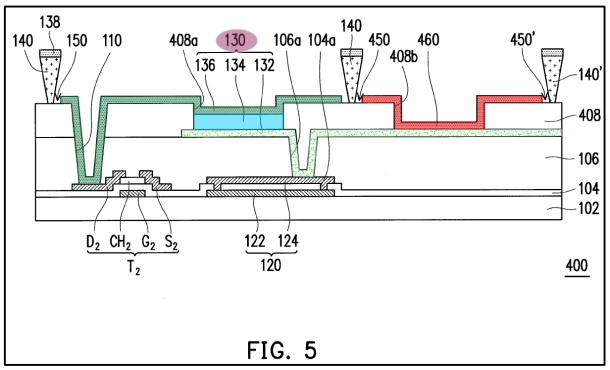

FIG. 5

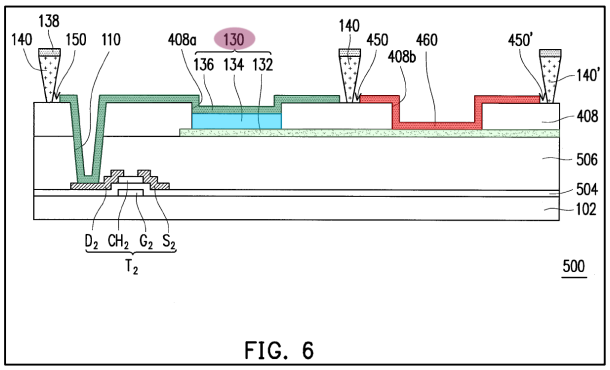

FIG. 6

Further, there is also no complete overlap of the second auxiliary electrode 460 and the LED in the horizontal direction, because there is no overlap of the second auxiliary electrode 460 and the first electrode layer 132 in the horizontal direction. *Id.*

Yet, second auxiliary electrode 460 in Figs. 5 and 6 is disclosed as being "located at a side of the light emitting device 130." *Id.*, 7:1-5; 8:4-8. Therefore, an electrode disposed "at a side of the light emitting device" as used in the 733 patent does not preclude partial vertical overlap of the electrode and at least one of the

layers of the light emitting device, nor does it require complete horizontal overlap of the electrode and all of the layers of the light emitting device. If an electrode disposed "at a side of" precluded any vertical overlap of the electrode with any of the three layers that define the light emitting device 130, or required complete horizontal overlap therebetween, then claim 1 would not read on any of the disclosed embodiments. EX1003, ¶63.

IV. OVERVIEW OF THE PRIOR ART REFERENCES

A. EX1004 - Hekmatshoar

"A novel TFT-OLED integration for OLED-independent pixel programming in amorphous-Si AMOLED pixels," Bahman Hekmatshoar et al., Society for Information Display, 2008 ("Hekmatshoar") was published at least as early as April 3, 2013. *See* EX1009, IDS filed on April 3, 2013 in file history of U.S. Patent Application 13/842,879, submitting Hekmatshoar as Cite No. NPL21. Hekmatshoar is prior art under post-AIA 35 U.S.C. § 102(a)(1).

B. EX1005 - Lee

U.S. Patent Publication No. 2009/0015149 ("Lee"), published on 1/15/2009, is prior art under post-AIA 35 U.S.C. § 102(a)(1).

C. EX1006 - Weaver

U.S. Patent Publication No. 2004/0079945 ("Weaver"), published on 4/29/2004, is prior art under post-AIA 35 U.S.C. § 102(a)(1).

D. EX1007 - Gupta

U.S. Patent No. 9,088,003 ("Gupta"), filed on 3/6/2013, and issued on 7/21/2015, is prior art under post-AIA 35 U.S.C. § 102(a)(2).

E. EX1008 - Han

U.S. Patent Publication No. 2011/0248309 ("Han"), issued on 10/13/2011, is prior art under post-AIA 35 U.S.C. § 102(a)(1).

V. GROUND 1: CLAIM 1 ANTICIPATED BY HEKMATSHOAR

The construction of "auxiliary electrode" applied for Ground 1 is "supplemental electrode."

A. Claim 1

1. [1pre]

To the extent that the preamble is limiting, Hekmatshoar discloses "a pixel structure (Hekmatshoar's a-SI AMOLED pixel)."[1] EX1003, ¶¶71-75.

Hekmatshoar discloses "direct voltage programming of active-matrix organic light-emitting-diode (AMOLED) pixels with n-channel amorphous-Si (a-

[1] The discussion for each claim limitation in this petition begins with a quote of the claim language in which parentheticals have been added which include exemplary arguments and evidence. This quote of the claim language is to orient the reader and the parentheticals are exemplary. Petitioner relies on all arguments and evidence provided with respect to a limitation (and any cross-referenced sections).

Si) TFTs," and specifically "a new 'inverted' integration technique which makes the direct programming possible by connecting the driver n-channel a-Si TFT to the OLED cathode." EX1004, Abstract, p. 183. Fig. 1(c) includes a caption that reads "Circuit schematic of 2-TFT AMOLED pixels:…..(c) new 'inverted' structure with n-channel TFTs (a-Si)." *Id.*, p. 183.

The caption for Fig. 3 reads: "FIGURE 3 – Schematic cross section of the fabricated new "inverted" AMOLED structure of Fig. 1(c), during the evaporation of (a) the organic layers and (b) cathode. *Id.*, p. 184.

The caption for Fig. 6 reads: "FIGURE 6 – Schematic cross section of the "modified" inverted AMOLED pixel, during the evaporation of (a) the organic layers and (b) cathode." *Id.*, p. 186. The embodiment of Fig. 6 is the same as that of Fig. 3, except that "we have modified the integration process by using insulating separators with an overhanging projection (Fig. 6) using a double layer photoresist process." *Id.*; EX1003, ¶74.

Each of the embodiments of Fig. 3(b) or Fig. 6(b), for the pixel structure of Fig. 1(c), separately anticipate claim 1, as set forth below. EX1003, ¶75.

2. [1a]

Hekmatshoar discloses "a data line (line marked Vdata) and a scan line (line marked Vselect)." EX1003, ¶¶76-77.

Hekmatshoar discloses a pixel circuit that includes a line marked Vdata and a line marked Vselect. EX1004, Fig. 1(c).

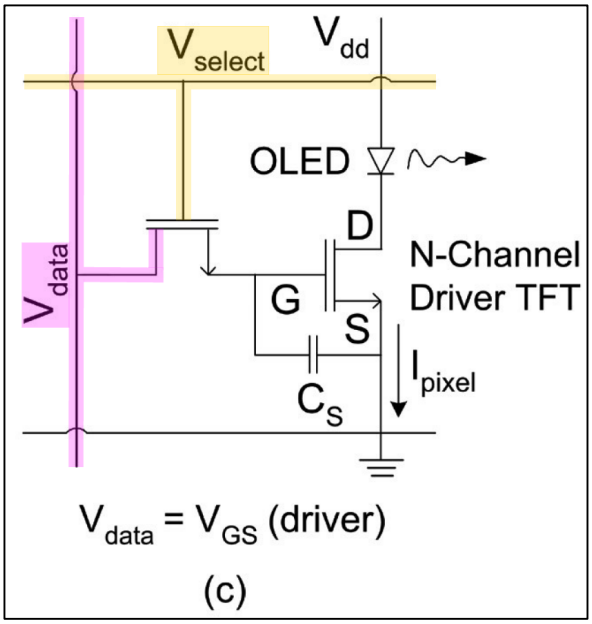

In comparing Fig. 1 of the 733 patent and Fig. 1(c) of Hekmatshoar, the line configurations of the circuit designs are essentially identical in both configuration and function. EX1003, ¶77.

3. [1b]

Hekmatshoar discloses "at least one active device (select transistor and N-Channel Driver TFT) electrically connected with the data line (line marked Vdata) and the scan line (line marked Vselect)." EX1003, ¶¶78-80.

With respect to Figs. 1(c), 3(b) and 6(b), Hekmatshoar discloses active devices which are thin film transistors (unmarked select transistor, and the transistor marked N-Channel Driver TFT which is referred to as the "driver TFT")

that are electrically connected with the line marked Vdata and the line marked Vselect. *Id.*, Fig. 1(c); EX1003, ¶79.

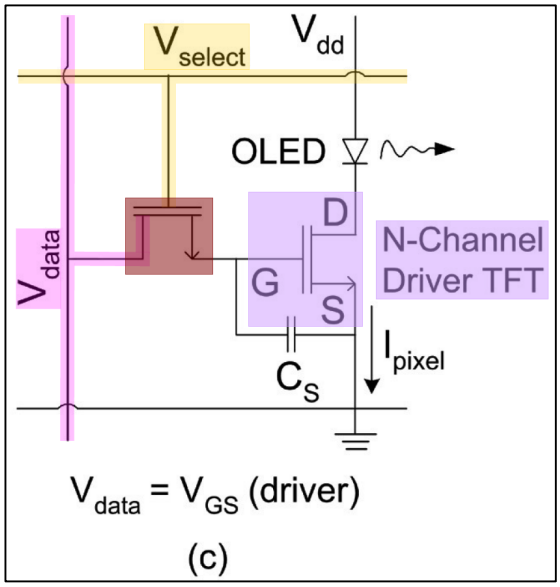

Transistors are active devices. EX1001, 3:33-59.

It should be noted that Hekmatshoar discloses a pixel structure circuit that is identical to the only disclosed pixel structure circuit embodiment in the733 patent. Compare Fig. 1 of the 733 patent (EX1001, Fig. 1) to Fig. 1(c) of Hekmatshoar (EX1004, Fig. 1(c)):

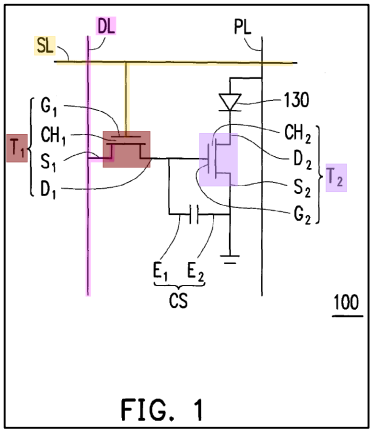

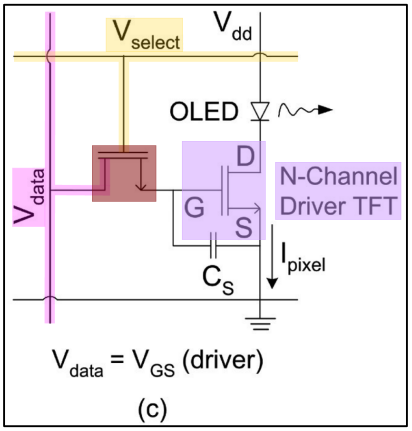

4. [1c]

Hekmatshoar discloses "a light emitting device (OLED) electrically connected with the active device, wherein the light emitting device comprises." EX1003, ¶¶81-83.

Claim 1 does not previously recite "an active device" and therefore "the active device" lacks antecedent basis. Rather, claim 1 previously recites "at least one active device." Therefore, a POSITA would have understood that reciting "the active device" (singular) in claim 1 or in claims dependent thereon refers to one of the "at least one active device" of claim 1 if there is more than one. *Id.* This interpretation is consistent with the 733 specification. EX1001, 2:66-67 ("at least one active device T1 and T2"), 3:7 ("the active device T1"), 3:8-9 ("[t]he active device T2").

Hekmatshoar discloses that "OLEDs" are "organic light-emitting diodes." EX1004, p. 183. Fig. 1(c) shows the OLED is electrically connected to the drain D of the N-Channel Driver TFT, which is an active device. EX1004, Fig. 1(c); EX1003, ¶83.

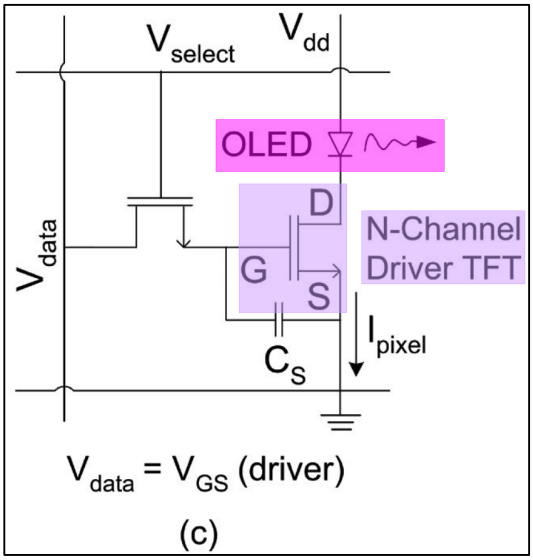

See also Cathode of the OLED electrically connected to the Drain of the N-Channel Driver TFT active device by the Interconnect and TFT/OLED Contact. EX1004, Fig. 3(b) and 6(b).

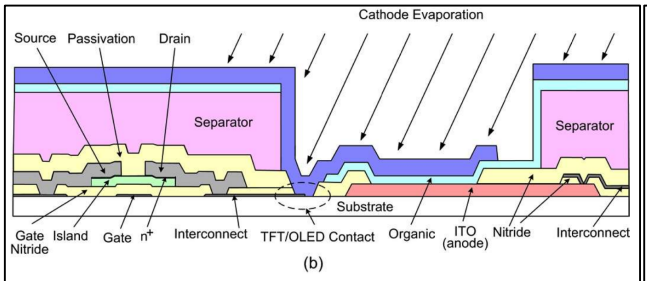

FIGURE 3 — Schematic cross section of the fabricated new "inverted" AMOLED structure of Fig. 1(c), during the evaporation of (a) the organic layers and (b) cathode.

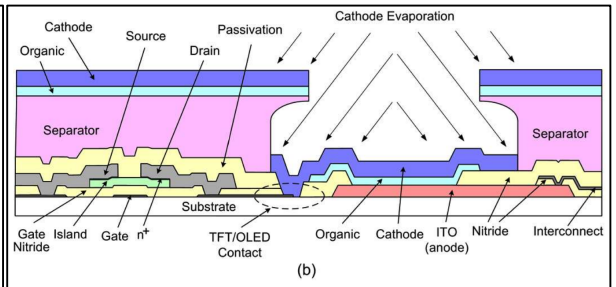

FIGURE 6 — Schematic cross section of the "modified" inverted AMOLED pixel, during the evaporation of (a) the organic layers and (b) cathode.

5. [1d]

Hekmatshoar discloses "a first electrode layer (ITO-anode)." EX1003, ¶¶84-85.

Hekmatshoar discloses "including ITO as the OLED anode." EX1004, p. 185). "The best OLEDs are deposited from anode to cathode, i.e., the anode (e.g., ITO) is deposited first, followed by the organic layers and then the cathode

(bottom-anode OLEDs)." *Id.*, p. 184. Figs. 3(b) and 6(b) show bottom-anode OLEDs, where the ITO-anode is an electrode layer. *Id.*, Figs. 3(b), 6(b); EX1003, ¶85.

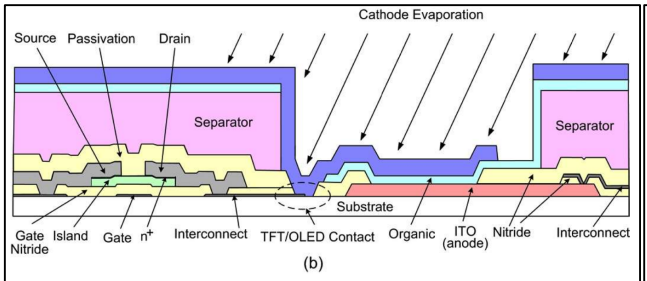

FIGURE 3 — Schematic cross section of the fabricated new "inverted" AMOLED structure of Fig. 1(c), during the evaporation of (a) the organic layers and (b) cathode.

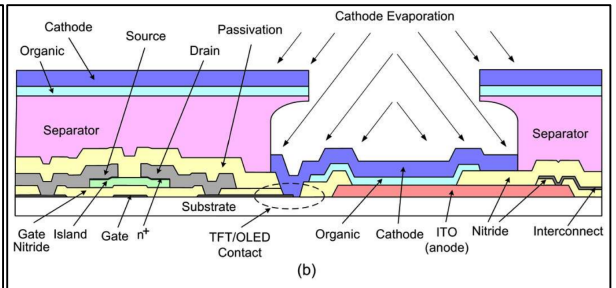

FIGURE 6 — Schematic cross section of the "modified" inverted AMOLED pixel, during the evaporation of (a) the organic layers and (b) cathode.

6. [1e]

Hekmatshoar discloses "a light emitting layer (organic) disposed on the first electrode layer (ITO-anode)." EX1003, ¶¶86-87.

Hekmatshoar discloses "the best OLEDs are deposited from anode to cathode, i.e., the anode (e.g., ITO) is deposited first, followed by the organic layers and then the cathode (bottom-anode OLEDs)." EX1004, p. 184. *See also*:

> "As shown in Fig. 3(a), the organic layers are then evaporated at an angle in such a way that an interconnect extension connected to the driving TFT is not coated with the organic layers, taking advantage of the separator's shadowing effect." *Id.*, p. 185.
>
> "In our experiment, we have used 10-µm-high separators with 5 µn of overhang. As shown in Fig. 6(a), the organic layers are then evaporated at normal incidence and the substrate is rotated during organic evaporation." *Id.*, p. 186.

Figs. 3(b) and 6(b) show bottom-anode OLEDs, where the organic layer is a light emitting layer that is disposed on the ITO-anode layer. *Id.*, Figs. 3(b), 6(b); EX1003, ¶87.

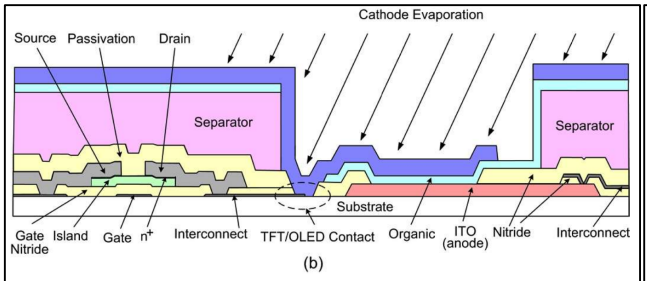

FIGURE 3 — Schematic cross section of the fabricated new "inverted" AMOLED structure of Fig. 1(c), during the evaporation of (a) the organic layers and (b) cathode.

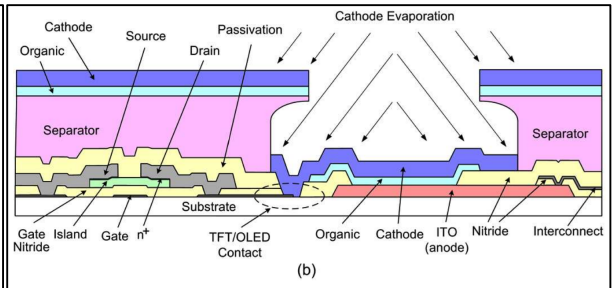

FIGURE 6 — Schematic cross section of the "modified" inverted AMOLED pixel, during the evaporation of (a) the organic layers and (b) cathode.

7. [1f]

Hekmatshoar discloses "a second electrode layer (cathode) disposed on the light emitting layer (organic), wherein the second electrode layer (cathode) is electrically connected (by TFT/OLED Contact, interconnect extension) with the active device (driver TFT)." EX1003, ¶¶88-90.

Claim 1 does not previously recite "an active device" and therefore "the active device" lacks antecedent basis. Rather, claim 1 previously recites "at least one active device." Therefore, a POSITA would have understood that reciting "the active device" (singular) in claim 1 or in claims dependent thereon refers to one of the "at least one active device" of claim 1 if there is more than one. *Id.* This interpretation is consistent with the 733 specification. EX1001, 2:66-67 ("at least one active device T1 and T2"), 3:7 ("the active device T1"), 3:8-9 ("[t]he active device T2").

Hekmatshoar discloses "the best OLEDs are deposited from anode to cathode, i.e., the anode (e.g., ITO) is deposited first, followed by the organic layers and then the cathode (bottom-anode OLEDs)." *Id.*, p. 184. Hekmatshoar discloses the formation the cathode and its electrical connection to the driver TFT (N-Channel Driver TFT) by the Interconnect:

> "Therefore, direct programming of a-Si TFTs requires a new technique for connecting the driver TFT to the OLED cathode instead of the OLED anode, as shown in Fig. 1(c)." *Id.*, p. 184.
>
> "As shown in Fig. 3(a), the organic layers are then evaporated at an angle in such a way that an interconnect extension connected to the driving TFT is not coated with the organic layers." *Id.*, p. 185.
>
> "Then, as shown in Fig. 3(b), the cathode (Mg—Ag/Ag) is evaporated at an angle opposite to the organic evaporation angle to form the OLED cathode and also to contact the interconnect extension." *Id.*
>
> "The cathode is evaporated next at an angle while the substrate is being rotated [Fig. 6(b)], and therefore the OLED cathode is connected to the exposed interconnect and the inverted structure of Fig. 1(c) is realized." *Id.*, p. 187.

Figs. 3(b) and 6(b) show bottom-anode OLEDs, where the cathode is an electrode layer disposed on the light emitting layer (organic), where the cathode is electrically connected to the drain (Drain) of the driver TFT (active device) by the TFT/OLED Contact and Interconnect. *Id.*, Figs. 3(b), 6(b); EX1003, ¶90.

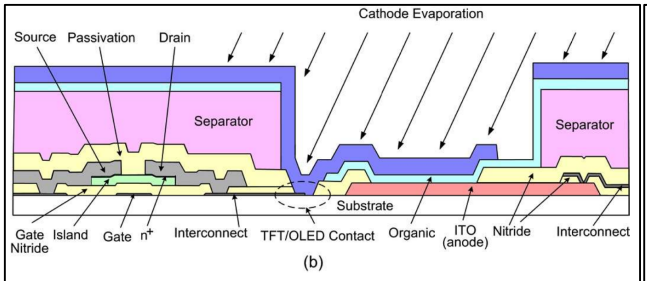

FIGURE 3 — Schematic cross section of the fabricated new "inverted" AMOLED structure of Fig. 1(c), during the evaporation of (a) the organic layers and (b) cathode.

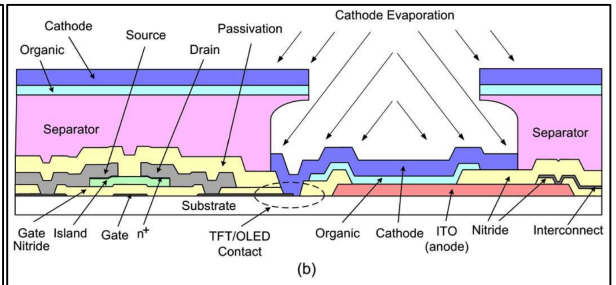

FIGURE 6 — Schematic cross section of the "modified" inverted AMOLED pixel, during the evaporation of (a) the organic layers and (b) cathode.

8. [1g]

Hekmatshoar discloses "an auxiliary electrode (Interconnect) electrically insulated from the active device (driver TFT) and disposed at a side (i.e., the right side) of the light emitting device (OLED that includes layers ITO-anode, organic, cathode), wherein the auxiliary electrode (Interconnect) is electrically connected with the first electrode layer (ITO-anode) of the light emitting device (OLED)." EX1003, ¶¶91-95.

Claim 1 does not previously recite "an active device" and therefore "the active device" lacks antecedent basis. Rather, claim 1 previously recites "at least one active device." Therefore, a POSITA would have understood that reciting "the active device" (singular) in claim 1 or in claims dependent thereon refers to one of the "at least one active device" of claim 1 if there is more than one. *Id.* This interpretation is consistent with the 733 specification. EX1001, 2:66-67 ("at least one active device T1 and T2"), 3:7 ("the active device T1"), 3:8-9 ("[t]he active device T2").

Figs. 3b and 6b of Hekmatshoar disclose the Interconnect is disposed on (and in electrical contact with) the first electrode layer (ITO-anode) of the light emitting device (OLED). EX1004, Figs. 3(b), 6(b).

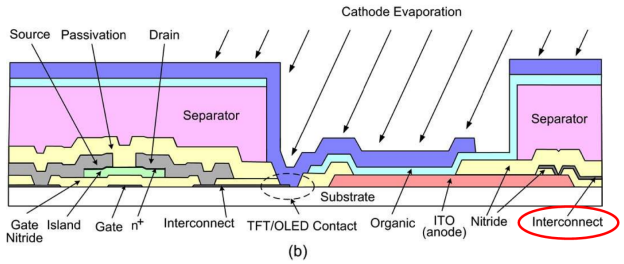

FIGURE 3 — Schematic cross section of the fabricated new "inverted" AMOLED structure of Fig. 1(c), during the evaporation of (a) the organic layers and (b) cathode.

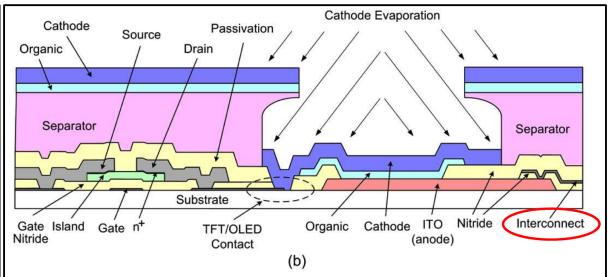

FIGURE 6 — Schematic cross section of the "modified" inverted AMOLED pixel, during the evaporation of (a) the organic layers and (b) cathode.

The Interconnect is electrically insulated from the driver TFT active device by Nitride and Passivation. *Id.* The organic layer is disposed between the ITO-anode (connected to Interconnect) and the cathode (connected to the driver TFT). The organic layer also serves to electrically insulate the Interconnect from the driver TFT for the same reason that light emitting layer 130 of the 733 patent (disposed between first electrode layer 132 which is connected to auxiliary electrode 220, and second electrode layer 136 which is connected to active device T2) serves to electrically insulate the first auxiliary electrode 220 from the active device T2. *See* Fig. 3 of 733 patent. Otherwise, claim 1 would not read on any of the 733 disclosed embodiments.

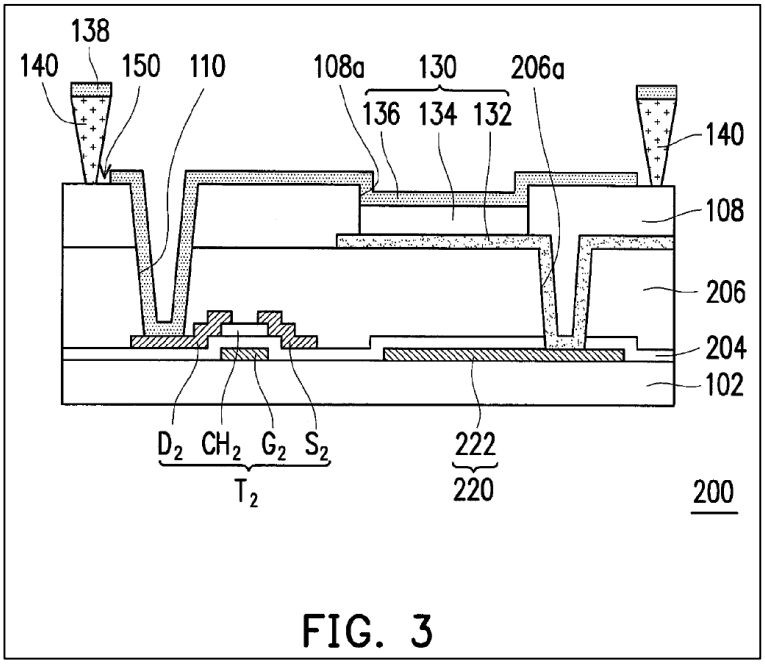

FIG. 3

The 733 patent teaches that this arrangement provides the claimed electrically insulated configuration. EX1001, 4:5-6. Hekmatshoar discloses that the Interconnect is an electrode that is supplemental to other electrodes in the structure. *Id.*; EX1003, ¶93.

The Interconnect is disposed at a side (i.e., the right side) of the light emitting device (OLED that includes layers ITO-anode, organic, cathode). EX1004, Figs. 3(b), 6(b). As shown in Figures 3(b) and 6(b), the Interconnect overlaps in the horizontal direction with at least two if not three of the layers of the OLED, which satisfies this term under the proper construction.

The partial vertical overlap of Hekmatshoar's Interconnect and the ITO-anode of the OLED pixel in Fig. 6(b), or the partial vertical overlap of Hekmatshoar's Interconnect and the ITO-anode and the organic layer of the OLED

pixel in Fig. 3(b), does not preclude a finding that Hekmatshoar discloses the Interconnect is disposed "at a side" of the light emitting device OLED under the proper construction. EX1003, ¶95.

VI. GROUND 2: CLAIMS 1-5 RENDERED OBVIOUS BY LEE IN VIEW OF HEKMATSHOAR OR WEAVER

The construction of "auxiliary electrode" applied for Ground 2 is "supplemental electrode" and "supplemental electrode to reduce the total resistance of the pixel structure."

A. Combination Rationale

It would have been obvious to a POSITA to combine the teachings of Lee with the teachings of Hekmatshoar or Weaver, to modify Lee to utilize the line configuration disclosed in Hekmatshoar for operating its light emitting diode, or the line configuration disclosed in Weaver for operating its light emitting device, in order to operate the light emitting diode of Lee. EX1003, ¶¶97-105.

Lee discloses a light emitting diode with an organic electroluminescent layer 60 disposed between a lower electrode (anode 41) and an upper electrode (cathode 70), with a thin film transistor (TFT) electrically connected to the cathode 70. EX1005, [0024], [0027], Fig. 1. Lee discloses that such organic electroluminescent devices can be used as a pixel of a video display. *Id.*, [0004]. However, Lee does not expressly disclose the line configuration for operating the light emitting diode in such a video display.

Hekmatshoar discloses an organic light-emitting diode (OLED) with an organic layer ("Organic") between a lower electrode ("ITO-anode") and an upper electrode ("Cathode"), with a thin film transistor TFT electrically connected to the upper electrode ("Cathode"). EX1004, pp. 184-186; Figs. 3(b) and 6(b). Hekmatshoar expressly discloses the electrical line configuration for operating the organic light-emitting diode, including the use of a select transistor and a drive transistor. *Id.*, Fig. 1(c).

Weaver discloses an organic light emitting device (OLED) with an organic layer 424 between a lower electrode (anode 406) and an upper electrode (cathode 422), with a thin film transistor 410 electrically connected to the upper electrode. EX1006, [0022], [0026]; Fig. 4. Weaver expressly discloses the electrical line configuration for operating the organic light emitting device, including the use of a select transistor and a drive transistor. *Id.*, Figs. 2 and 3.

It would have been obvious to combine the teachings of Lee and either Hekmatshoar or Weaver to modify Lee to include the use the line configuration of either Hekmatshoar or Weaver to operate the light emitting diode of Lee as a pixel in a video display. EX1003, ¶101.

Lee, Hekmatshoar and Weaver are analogous prior art to the 733 patent, as each relates to organic light emitting devices/diodes with an organic light emitting layer disposed between an anode electrode layer and a cathode electrode layer, and

with a thin film transistor electrically connected to the cathode electrode layer, as set forth above. *Id.*, ¶102.

A POSITA would have understood the problem involved, namely how to configure electrical lines to operate the light emitting diode of Lee as pixels in a video display. To overcome this problem, Hekmatshoar and Weaver both disclose an electrical line configuration for operating organic light emitting diodes/devices. A POSITA would have been motivated to implement the electrical line configuration of Hekmatshoar or of Weaver for the light emitting diode of Lee so that a plurality of light emitting diodes of Lee can be used as pixels of a video display. *Id.*, ¶103.

The modification to Lee could be implemented, for example, by connecting the thin film transistor 41 as a drive transistor and light emitting diode of Lee to the same line configuration (which includes a select transistor) that Hekmatshoar discloses for its thin film transistor and OLED, or to the same line configuration that Weaver discloses for its thin film transistor and OLED. *Id.*, ¶104.

A POSITA would have had a reasonable expectation of success in combining Lee with either Hekmatshoar or Weaver, as all three references disclose thin film transistors electrically connected to the cathode layer of a cathode/organic/anode OLED, and the modifications to Lee to implement the solution taught in Hekmatshoar or Weaver involves modifications of only routine

skill in the art. *Id.*, ¶105. Moreover, because combining the teachings of Lee with Hekmatshoar or Weaver involve known methods, it would have yielded predictable results. *Id.*.

B. Claim 1

1. [1pre]

To the extent that the preamble is limiting, Lee in combination with Hekmatshoar or Weaver renders obvious "a pixel structure (Lee's sub-pixel region of an organic electroluminescent device)." EX1003, ¶¶106-107.

Fig. 1 of Lee shows "a cross sectional view of an organic electroluminescent device." EX1005, [0021], Fig. 1. Buffer layer 50 including buffer pattern 51 "defining a sub-pixel region." *Id.*, [0026]. Such organic electroluminescent devices "may be used as a pixel of a video display or a surface light source." *Id.*, [0004].

2. [1a]

Lee in combination with Hekmatshoar or Weaver renders obvious "a data line (Hekmatshoar's line marked Vdata; Weaver's data line 304) and a scan line (Hekmatshoar's line marked Vselect; Weaver's select line 306)." EX1003, ¶¶108-113.

Hekmatshoar discloses a pixel circuit that includes a line marked Vdata and a line marked Vselect. EX1004, Fig. 1(c).

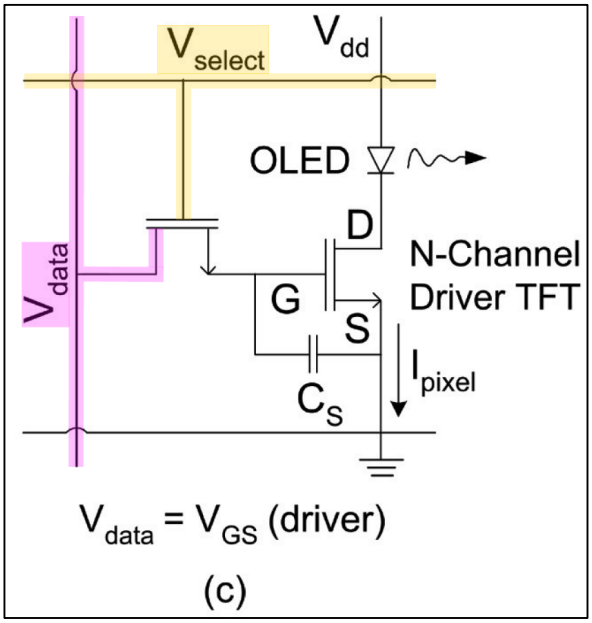

In comparing Fig. 1 of the 733 patent and Fig. 1(c) of Hekmatshoar, the line configurations of the circuit designs are essentially identical in both configuration and function. EX1003, ¶110.

Weaver discloses that each circuit of Fig. 3 is connected to a data line 304 and a select line 306. EX1006, Fig. 3, [0021], *see also*, Fig. 2, [0019] (data line 204 and select line 206). EX1003, ¶111.

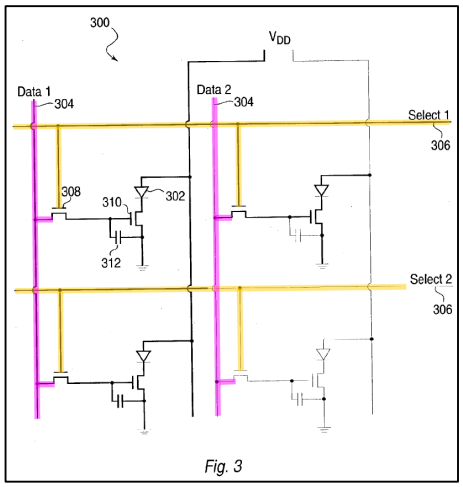

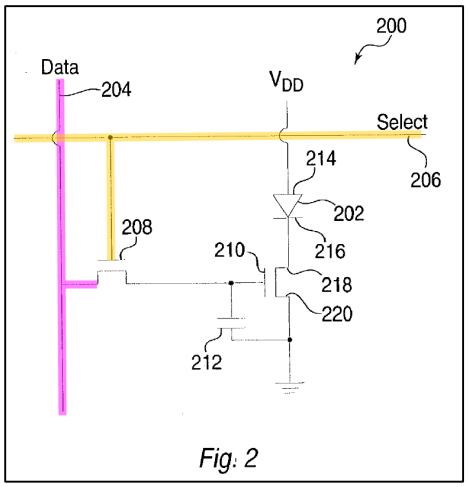

A voltage applied to the select line 306 will turn on transistor 308. *Id.*, Fig. 3, [0017]. In comparing Fig. 1 of the 733 patent and Fig. 2 of Weaver, the line configurations of the circuit designs are essentially identical in both configuration and function. EX1003, ¶112.

It would have been obvious to a POSITA to combine the teachings of Lee with the teachings of Hekmatshoar or Weaver, to utilize Hekmatshoar's line marked Vdata and line marked Vselect, or Weaver's data line 304 and select line 306, for operating the light emitting diode of Lee. *See* Section VI.A (Combination Rational); EX1003, ¶113.

3. [1b]

Lee in combination with Hekmatshoar or Weaver renders obvious "at least one active device (the select transistor from Hekmatshoar or Weaver and Lee's thin film transistor TFT Tr) electrically connected with the data line (Hekmatshoar's line marked Vdata or Weaver's data line 304) and the scan line (Hekmatshoar's line marked Vselect or Weaver's select line 306)." EX1003, ¶¶114-121.

Lee discloses that thin film transistors (TFTs) have been used in active matrix type organic electroluminescent devices. EX1005, [0005]-[0006]. Lee discloses an organic electroluminescent device that includes an active device which is a thin film transistor (TFT Tr). *Id.*, [0021], [0023], Fig. 1; EX1003, ¶115.

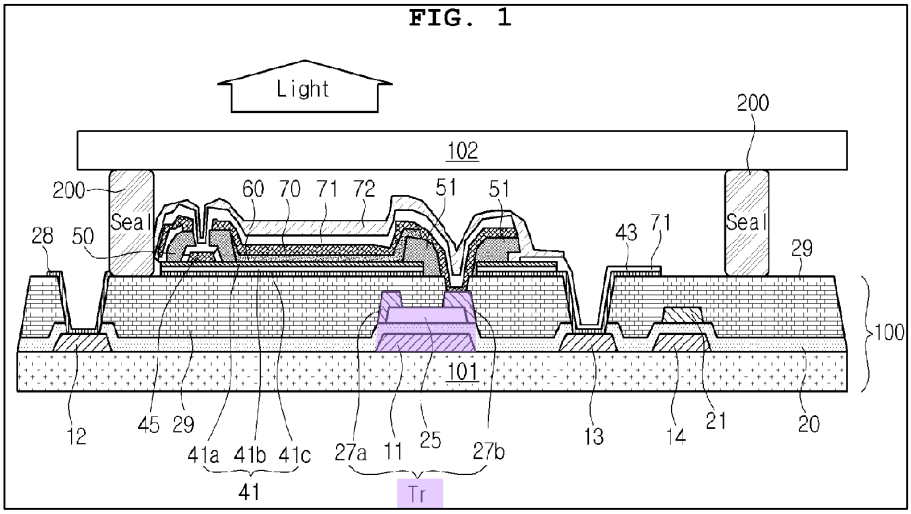

Transistors are active devices. EX1001, 3:33-59.

With respect to Figs. 1(c), 3(b) and 6(b), Hekmatshoar discloses active devices which are thin film transistors (unmarked select transistor, and the transistor marked N-Channel Driver TFT which is referred to as the "driver TFT") that are electrically connected with the line marked Vdata and the line marked Vselect. *Id.*, Fig. 1(c); EX1003, ¶116.

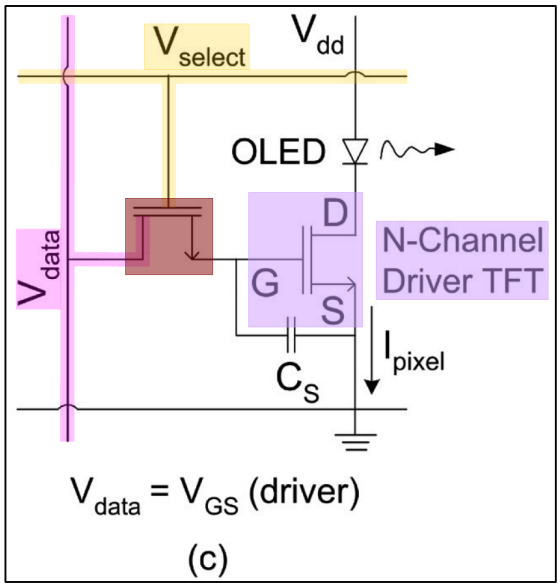

Weaver discloses that each of the circuits in Fig. 3 is a circuit such as that shown in Fig. 2. EX1006, [0021].

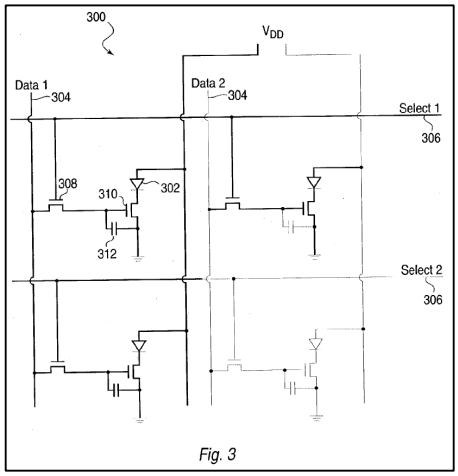

Fig. 3

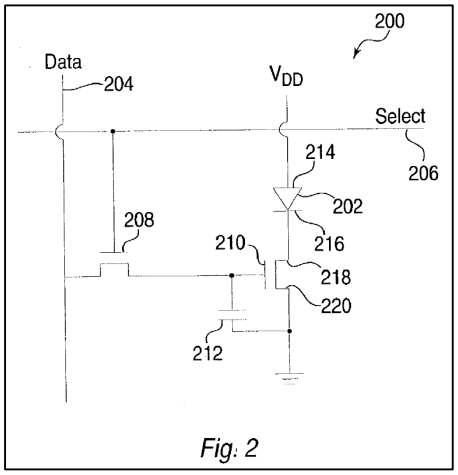

Fig. 2

Weaver also discloses that the OLED 400 and transistor 410 in Fig. 4 may be the elements of an array such as shown in Fig. 3. *Id.*, [0022]. Therefore, transistor 210 in Fig. 2, transistor 310 in Fig. 3 and transistor 410 in Fig. 4 refer to the same transistor. Similarly, transistor 208 in Fig. 2 and transistor 308 in Fig. 3 refer to the same transistor. Further, OLED 202 in Fig. 2, OLED 302 in Fig. 3 and OLED 400 in Fig. 4 refer to the same OLED. Finally, data lines 204 and 304 refer to the same data line and select lines 206 and 306 refer to the same select line. EX1003, ¶118.

Weaver discloses at least one active device (transistor 208/308 and transistor 210/310/410) that are electrically connected with a data line 204/304 and a scan (select) line 206/306. *Id.*, [0019], [0021], Figs. 2-4.

It should be noted that Hekmatshoar and Weaver each discloses a pixel structure circuit that is identical to the only disclosed pixel structure circuit embodiment in the 733 patent. Compare Fig. 1 of the 733 patent (EX1001, Fig. 1) to Fig. 1(c) of Hekmatshoar (EX1004, Fig. 1(c)) and Fig. 2 of Weaver (EX1006, Fig. 2):

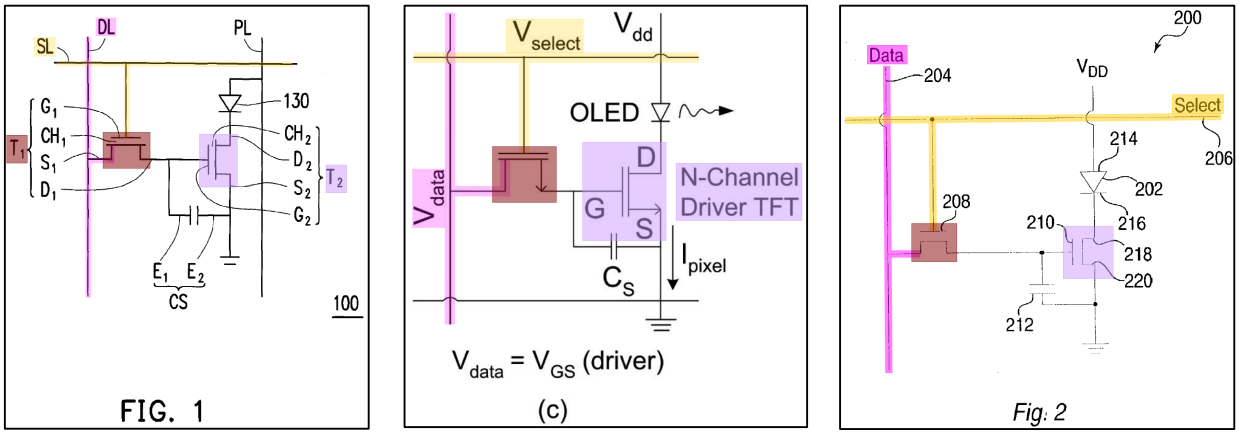

In combining the teachings of Lee with Hekmatshoar and Weaver as set forth above in §VI.B.2, it would have been obvious to a POSITA to electrically connect Lee's active device TFT Tr with the data line and the scan line and select transistor of Hekmatshoar or Weaver, for operating the light emitting diode of Lee. *See* Section VI.A (Combination Rational); EX1003, ¶121.

4. [1c]

Lee in combination with Hekmatshoar or Weaver renders obvious "a light emitting device (Lee's light emitting diode) electrically connected with the active device (Lee's thin film transistor TFT Tr), wherein the light emitting device comprises." EX1003, ¶¶122-124.

Claim 1 does not previously recite "an active device" and therefore "the active device" lacks antecedent basis. Rather, claim 1 previously recites "at least one active device." Therefore, a POSITA would have understood that reciting "the active device" (singular) in claim 1 or in claims dependent thereon refers to one of the "at least one active device" of claim 1 if there is more than one. *Id.* This interpretation is consistent with the 733 specification. EX1001, 2:66-67 ("at least one active device T1 and T2"), 3:7 ("the active device T1"), 3:8-9 ("[t]he active device T2").

Lee discloses a light emitting diode that includes first electrode 41, organic electroluminescent layer 60, and second electrode 70. EX1005, [0027], Fig. 1.

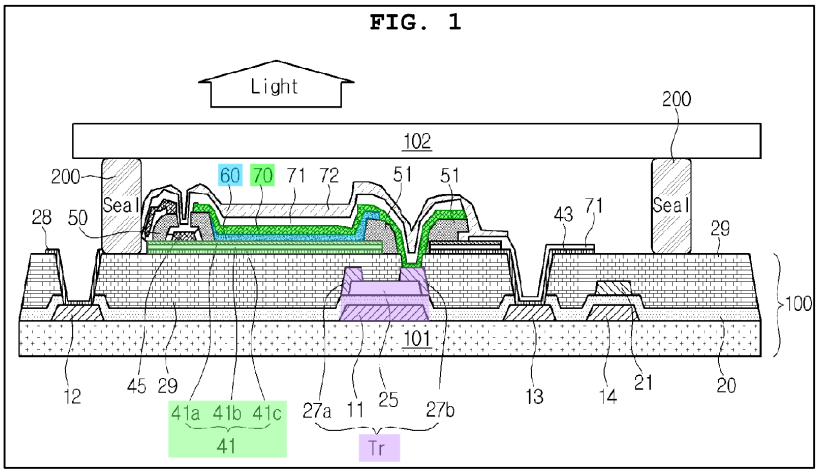

The second electrode 70 is "electrically connected to the drain electrode 27b" of the TFT Tr active device. *Id.*

5. [1d]

Lee in combination with Hekmatshoar or Weaver renders obvious "a first electrode layer (Lee's first electrode 41)." EX1003, ¶¶125-126.

Lee discloses a light emitting diode that includes first electrode 41, organic electroluminescent layer 60, and second electrode 70. EX1005, [0027], Fig. 1. First electrode 41 is "formed with first, second and third electrode layers 41a, 41b, and 41c." *Id.*, Fig. 1.

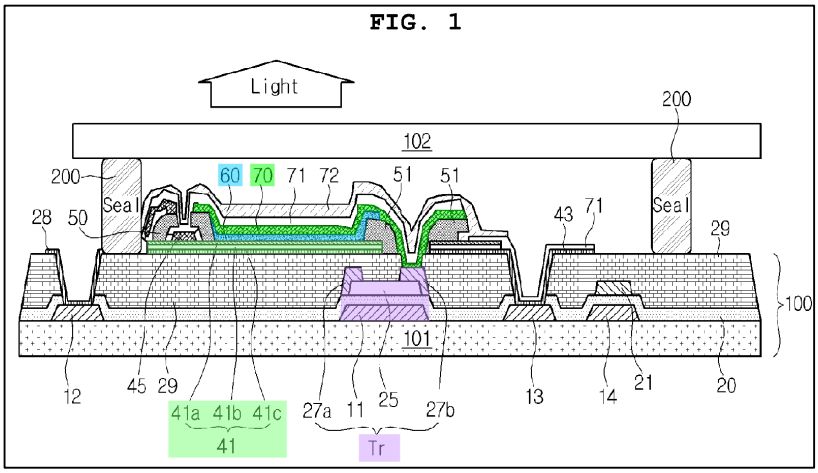

6. [1e]

Lee in combination with Hekmatshoar or Weaver renders obvious "a light emitting layer (Lee's organic electroluminescent layer 60) disposed on the first electrode layer (Lee's first electrode 41)." EX1003, ¶¶127-128.

Lee discloses a light emitting diode that includes first electrode 41, organic electroluminescent layer 60, and second electrode 70. EX1005, [0027], Fig. 1.

The organic electroluminescent layer 60 is disposed on the first electrode 41. *Id.*, Fig. 1.

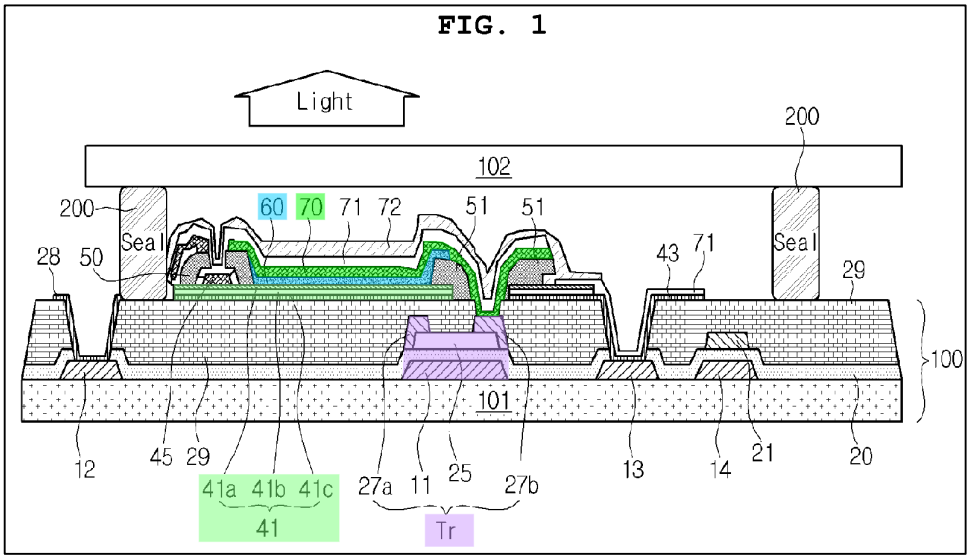

7. [1f]

Lee in combination with Hekmatshoar or Weaver renders obvious "a second electrode layer (Lee's second electrode 70) disposed on the light emitting layer (Lee's organic electroluminescent layer 60), wherein the second electrode layer (Lee's second electrode 70) is electrically connected with the active device (Lee's TFT Tr)." EX1003, ¶¶129-132.

Claim 1 does not previously recite "an active device" and therefore "the active device" lacks antecedent basis. Rather, claim 1 previously recites "at least one active device." Therefore, a POSITA would have understood that reciting "the active device" (singular) in claim 1 or in claims dependent thereon refers to one of the "at least one active device" of claim 1 if there is more than one. *Id.* This

interpretation is consistent with the 733 specification. EX1001, 2:66-67 ("at least one active device T1 and T2"), 3:7 ("the active device T1"), 3:8-9 ("[t]he active device T2").

Lee discloses a light emitting diode that includes first electrode 41, organic electroluminescent layer 60, and second electrode 70. EX1005, [0027], Fig. 1. The second electrode 70 is disposed on the organic electroluminescent layer 60. *Id.*, Fig. 1.

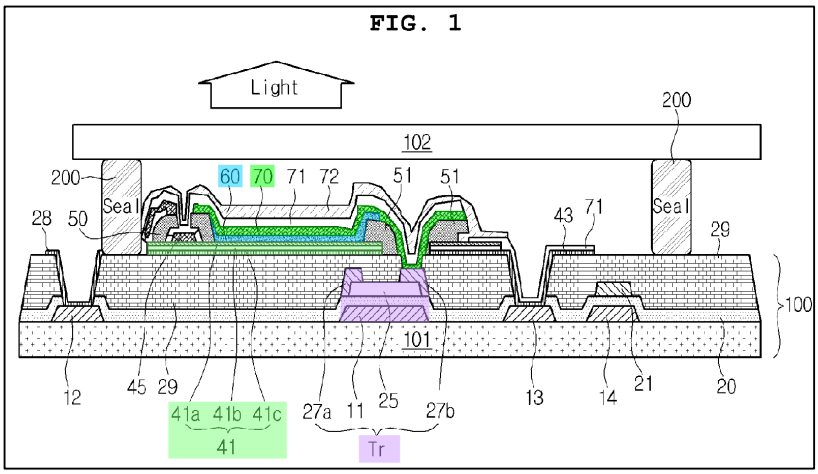

Lee discloses that the active device TFT Tr is constituted by "gate electrode 11, active layer 25, and source and drain electrodes 27a and 27b." *Id.*, [0023]. Further, "A part of the second electrode 70 that is divided in a sub-pixel unit is electrically connected to the drain electrode 27b through a contact hole formed at the region of the drain electrode 27b." *Id.*, [0027]. Therefore, the second electrode 70 is electrically connected to the active device TFT Tr. Ex. 1003, ¶132.

8. [1g]

Lee in combination with Hekmatshoar or Weaver renders obvious "an auxiliary electrode (Lee's electrode pattern 45) electrically insulated from the active device (Lee's TFT Tr) and disposed at a side (i.e., the left side) of the light emitting device (Lee's light emitting diode that includes first electrode 41, organic electroluminescent layer 60, second electrode 70), wherein the auxiliary electrode (electrode pattern 45) is electrically connected with the first electrode layer (first electrode 41) of the light emitting device." EX1003, ¶¶133-139.

Claim 1 does not previously recite "an active device" and therefore "the active device" lacks antecedent basis. Rather, claim 1 previously recites "at least one active device." Therefore, a POSITA would have understood that reciting "the active device" (singular) in claim 1 or in claims dependent thereon refers to one of the "at least one active device" of claim 1 if there is more than one. *Id.* This interpretation is consistent with the 733 specification. EX1001, 2:66-67 ("at least one active device T1 and T2"), 3:7 ("the active device T1"), 3:8-9 ("[t]he active device T2").

Lee discloses a light emitting diode that includes first electrode 41, organic electroluminescent layer 60, and second electrode 70. EX1005, [0027], Fig. 1. Lee discloses "An electrode pattern 45 is formed on the first electrode 41 at a central region of the buffer layer 50." *Id.*, [0027].

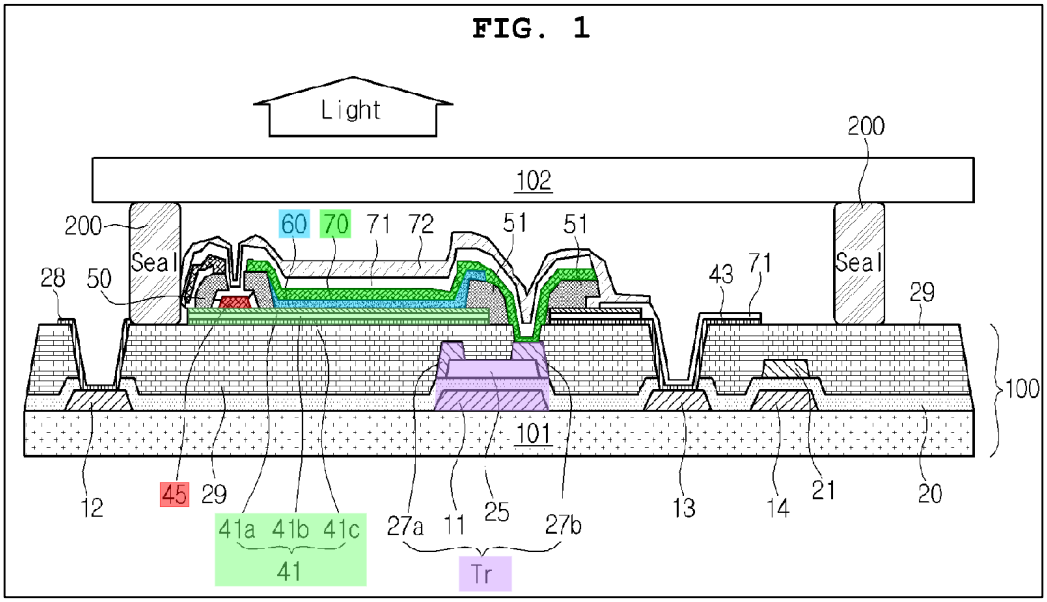

Lee's electrode pattern 45 is electrically connected with the first electrode 41 given they are in physical contact. EX1003, ¶135. Electrode pattern 45 is electrically insulated from TFT Tr by planarization layer 29. EX1005, Fig. 1. A POSITA would have understood that planarization layer 29 is made of insulating material, so that electrical features such as source electrode 27a, drain electrode 27b and first electrode 41 (which are all shown in Fig. 1 in physical contact with planarization layer 29) are not electrically shorted together by planarization layer 29, which would render the device in operatable. EX1003, ¶135.

The organic electroluminescent layer 60 layer is disposed between the first electrode 41 (connected to electrode pattern 45) and the second electrode 70 (connected to the TFT Tr). The organic electroluminescent layer 60 layer also serves to electrically insulate the electrode pattern 45 from the TFT Tr for the same reason that light emitting layer 130 of the 733 patent (disposed between first

electrode layer 132 which is connected to auxiliary electrode 220, and second electrode layer 136 which is connected to active device T2) serves to electrically insulate the first auxiliary electrode 220 from the active device T2. See Fig. 3 of 733 patent. Otherwise, claim 1 would not read on any of the 733 disclosed embodiments.

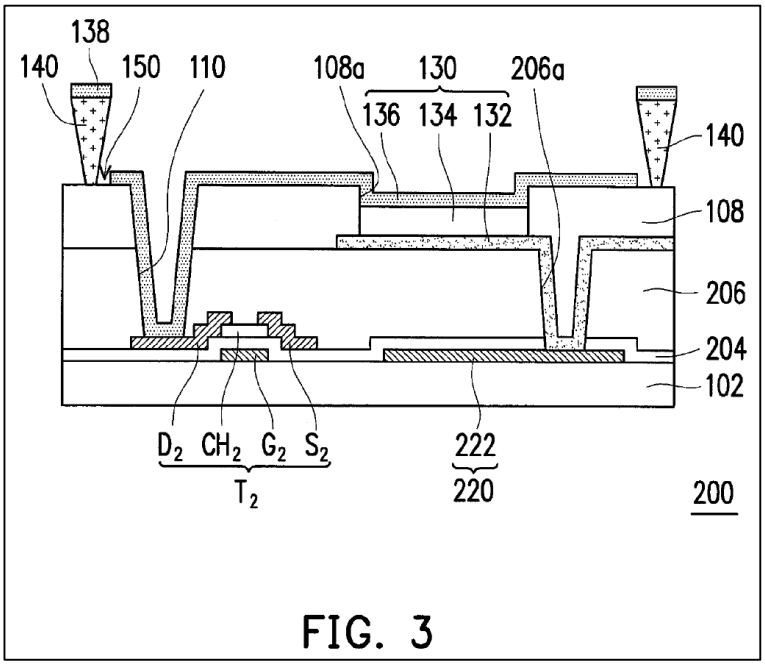

FIG. 3

The 733 patent teaches that this arrangement provides the claimed electrically insulated configuration. EX1001, 4:5-6.

Lee's electrode pattern 45 is disposed at a side (i.e., the left side) of the light emitting device (light emitting diode that includes first electrode 41, organic electroluminescent layer 60, second electrode 70. EX1005, Fig. 1. Specifically, electrode pattern 45 overlaps in the horizontal direction with the organic

electroluminescent layer 60 and second electrode 70 of the light emitting diode which satisfies this term under the proper construction.

The partial vertical overlap of electrode pattern 45 and first electrode 41 does not preclude a finding that Lee discloses the electrode pattern 45 is disposed "at a side" of the light emitting diode under the proper construction. EX1003, ¶138.

Lee's electrode pattern 45 satisfies both proposed constructions for "auxiliary electrode." First, Lee discloses that the electrode pattern 45 is an electrode that is supplemental to other electrodes in the structure. EX1005, Fig. 1; EX1003, ¶139. Second, Lee discloses that the electrode pattern 45 is a supplemental electrode that reduces the total resistance of the pixel structure: "The electrode pattern 45 serves to lower the resistance of the first electrode 41." EX1005, [0038]; EX1003, ¶139. A POSITA would have understood from this teaching of Lee that the lowered resistance of first electrode 41 is a result of the electrode pattern 45 being connected in parallel to at least a portion of the first electrode 41. EX1003, ¶139.

C. Claim 2

1. [2pre]

Lee in combination with Hekmatshoar or Weaver renders obvious "the pixel structure (Lee's modified pixel structure in view of Hekmatshoar or Weaver) according to claim 1, further comprising". *See* claim 1, §VI.B.

2. [2a]

Lee in combination with Hekmatshoar or Weaver renders obvious "a first insulating layer (Lee's planarization layer 29) covering the active device (Lee's thin film transistor TFT Tr), and the first electrode layer (Lee's first electrode 41) of the light emitting device being disposed on the first insulating layer". EX1003, ¶¶141-145.

Parent claim 1 does not previously recite "an active device" and therefore "the active device" lacks antecedent basis. Rather, claim 1 previously recites "at least one active device." Therefore, a POSITA would have understood that reciting "the active device" (singular) in claim 1 or in claims dependent thereon refers to one of the "at least one active device" of claim 1 if there is more than one. *Id.* This interpretation is consistent with the 733 specification. EX1001, 2:66-67 ("at least one active device T1 and T2"), 3:7 ("the active device T1"), 3:8-9 ("[t]he active device T2").

Lee discloses planarization layer 29 covering the thin film transistor TFT Tr. EX1005, Fig. 1.

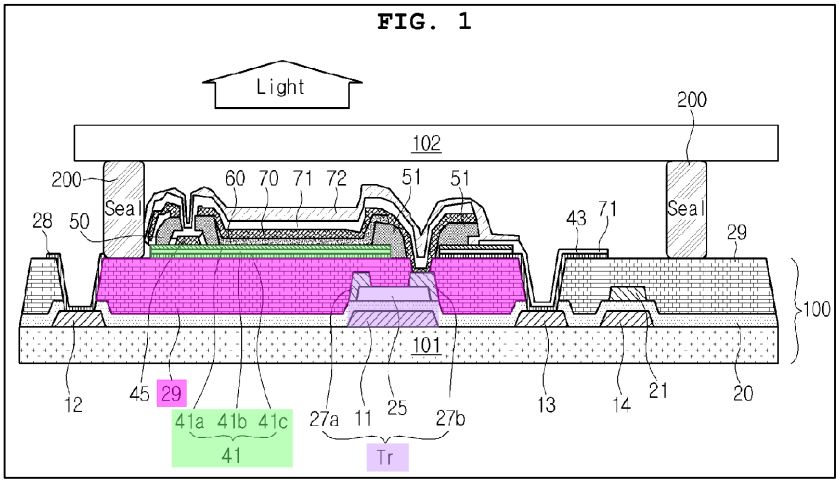

A POSITA would have understood that planarization layer 29 is made of insulating material, so that electrical features such as source electrode 27a, drain electrode 27b and first electrode 41 (which are all shown in Fig. 1 in physical contact with planarization layer 29) are not electrically shorted together by planarization layer 29, which would render the device in operatable. EX1003, ¶144.

Lee's first electrode 41 is disposed on the planarization layer 29. EX1005, Fig. 1. Further, Lee discloses "a first electrode 41 formed with first, second, and third electrode layers 41a, 41b, and 41c is formed on the planarization layer 29." *Id.*, [0024].

3. [2b]

Lee in combination with Hekmatshoar or Weaver renders obvious "a second insulating layer (Lee's buffer layer 50/ buffer pattern 51 layer) covering the first insulating layer (Lee's planarization layer 29) and the first electrode layer (Lee's

first electrode 41) of the light emitting device, and the second electrode layer (Lee's second electrode 70) of the light emitting device being disposed on the second insulating layer (Lee's buffer layer 50/ buffer pattern 51 layer), wherein the second insulating layer has an opening and a first contact window opening that expose the first electrode layer (Lee's first electrode 41), and the light emitting layer (Lee's organic electroluminescent layer 60) of the light emitting device is disposed in the opening and the auxiliary electrode (Lee's electrode pattern 45) is electrically connected with the first electrode layer (Lee's first electrode 41) via the first contact window opening". EX1003, ¶¶146-150.

See Annotated Fig. 1 of Lee:

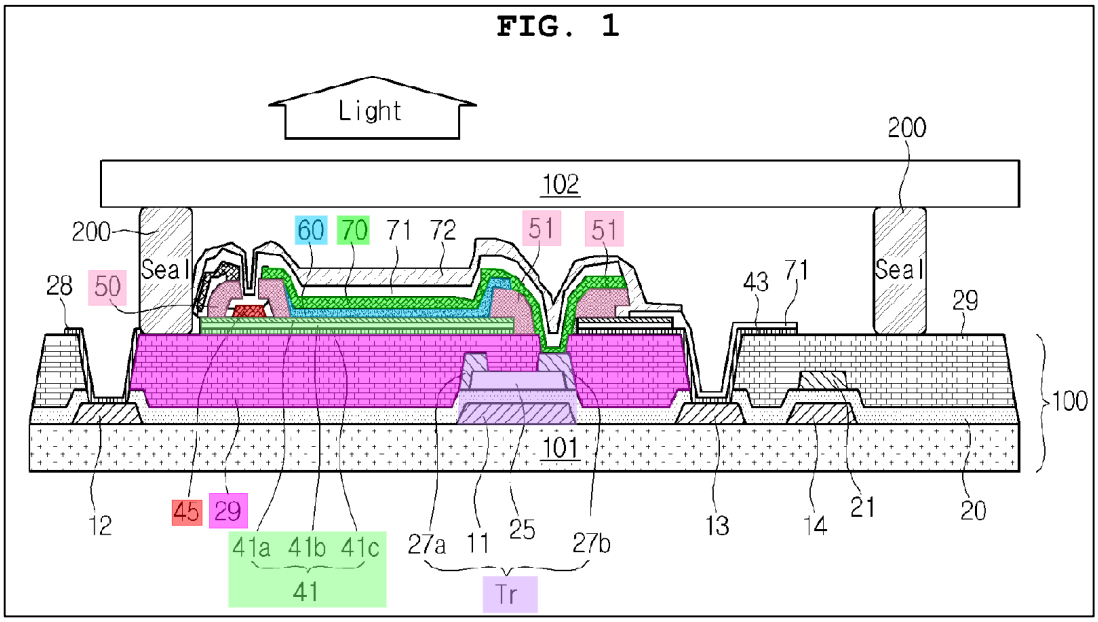

Lee discloses:

"A buffer layer 50 defining a Sub-pixel region is formed by forming a dielectric film on the dielectric substrate 101 and patterning the

> dielectric film. The reference number 51 in FIG. 1 is a buffer pattern indicating a part of the buffer layer 50 defining the sub-pixel region. The buffer pattern 51 is formed together with the buffer layer 50." EX1005, [0026].

A POSITA would have understood that a "dielectric film" is an insulating layer. EX1003, ¶147. A POSITA would also understand that because the buffer layer 50 is formed of a dielectric film that is patterned, and that buffer pattern 51 is "indicating a part of the buffer layer 50" and which is "formed together with buffer layer 50," that buffer layer 50 and buffer pattern 51 are formed from the same dielectric layer, and therefore collectively they are an insulating layer. *Id*.

Fig. 1 of Lee shows the buffer layer 50/ buffer pattern 51 layer covering the planarization layer 29 and the first electrode 41. EX1005, Fig. 1. Fig. 1 of Lee also shows that second electrode 70 of the light emitting device is disposed on the buffer layer 50/ buffer pattern 51 layer. *Id.*

The buffer layer 50/ buffer pattern 51 layer includes an opening (marked as "OPENING" in Fig. 1 of Lee below), which exposes the first electrode 41. The organic electroluminescent layer 60 of Lee's light emitting device is disposed in the "OPENING".

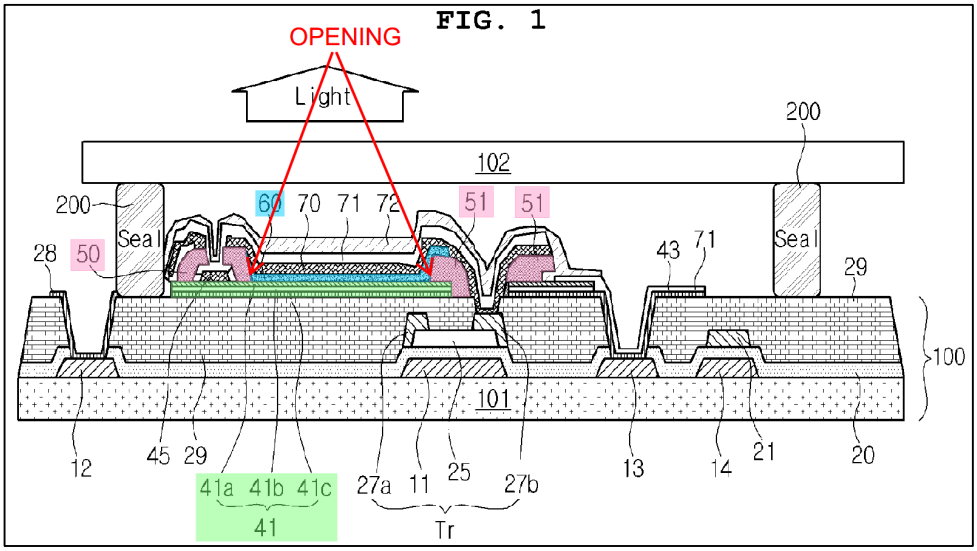

The buffer layer 50/ buffer pattern 51 layer includes a first contact window opening (*see* annotated partial expanded view of Fig. 1 below), which exposes the first electrode 41.

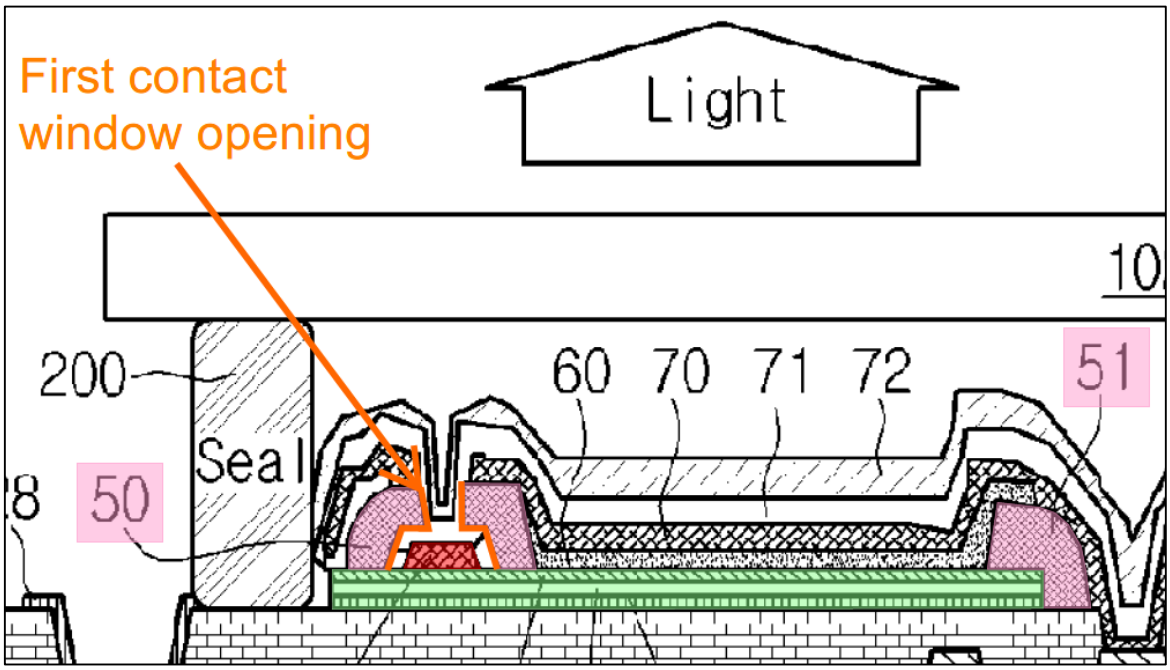

Lee discloses that "an electrode pattern 45 is formed on the first electrode 41 at a central region of the buffer layer 50." *Id.*, [0027]. Fig. 1 shows the electrode

pattern 45 is formed in the first contact window opening. Therefore, Lee discloses that the electrode pattern 45 is electrically connected with the first electrode 41 via the first contact window opening. EX1003, ¶150.

D. Claim 3

Lee in combination with Hekmatshoar or Weaver renders obvious "the pixel structure (Lee's modified pixel structure in view of Hekmatshoar or Weaver) according to claim 2 (*see* claim 2), wherein the first insulating layer (Lee's planarization layer 29) and the second insulating layer (Lee's buffer layer 50/ buffer pattern 51 layer) further comprise a second contact window opening (Lee's contact hole) that exposes a portion of the active device (Lee's TFT Tr), and the second electrode layer (Lee's second electrode 70) of the light emitting device is electrically connected with the active device (Lee's TFT Tr) via the second contact window opening." EX1003, ¶¶151-153.

Parent claims 1-2 does not previously recite "an active device" and therefore "the active device" lacks antecedent basis. Rather, claim 1 previously recites "at least one active device." Therefore, a POSITA would have understood that reciting "the active device" (singular) in claim 1 or in claims dependent thereon refers to one of the "at least one active device" of claim 1 if there is more than one. *Id.* This interpretation is consistent with the 733 specification. EX1001, 2:66-67

("at least one active device T1 and T2"), 3:7 ("the active device T1"), 3:8-9 ("[t]he active device T2").

The planarization layer 29 and the buffer layer 50/ buffer pattern 51 layer includes a second contact window opening (*see* annotated partial expanded view of Fig. 1 below), which exposes the drain electrode 27b portion of the TFT Tr active device.

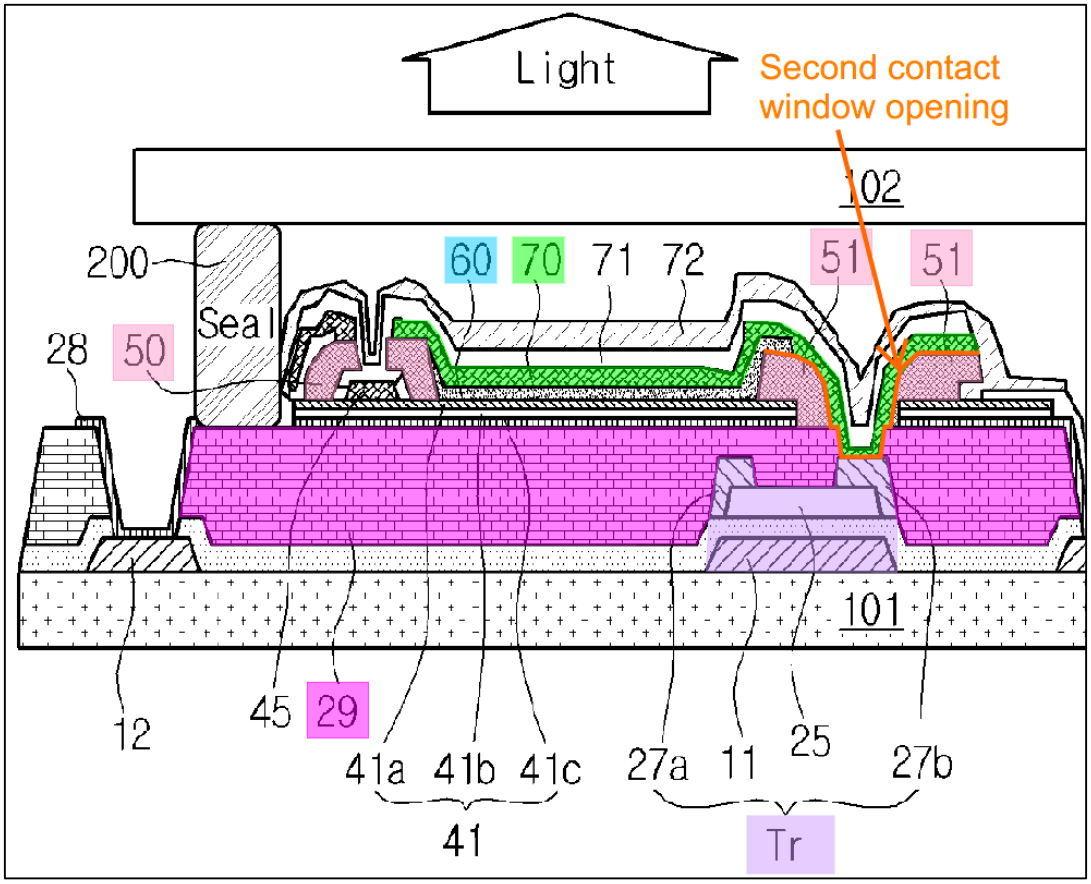

Fig. 1 shows that second electrode 70 is electrically connected with the TFT Tr via the second contact window opening. Lee refers to the second contact window opening as a "contact hole": "A part of the second electrode 70 that is divided in a

sub-pixel unit is electrically connected to the drain electrode 27b through a contact hole formed at the region of the drain electrode 27b." *Id.*, [0027].

E. Claim 4

1. [4pre]

Lee in combination with Hekmatshoar or Weaver renders obvious "the pixel structure (Lee's modified pixel structure in view of Hekmatshoar or Weaver) according to claim 1, further comprising". *See* claim 1, §VI.B.

2. [4a]

Lee in combination with Hekmatshoar or Weaver renders obvious "a first isolating structure (Lee's seal line 200, or alternatively Lee's righthand buffer layer 50 and right hand seal line 200) disposed around the second electrode layer (Lee's second electrode 70) of the light emitting device, wherein a first gap exists between the second electrode layer (Lee's second electrode 70) and the first isolating structure (Lee's seal line 200, or alternatively Lee's righthand buffer layer 50 and right hand seal line 200)". EX1003, ¶¶155-158.

Claim 4 only recites the location of the first isolating structure, but not its structure or function. The 733 patent discloses "A material of the first isolating structure 140 is a photoresist or other suitable materials, for example." EX1001, 5:37-42. However, the 733 patent does not expressly disclose what if anything is being isolated by the first isolating structure. *Id.*, 5:37-62; EX1003, ¶156.

Therefore, a POSITA would have understood that the plain meaning of "first isolating structure" is a first structure of insulation material. EX1003, ¶156.

Fig. 1 of Lee shows seal line 200 disposed around the second electrode 70, with a first gap indicated by the red arrows added to annotated Fig. 1 below between the second electrode 70 and the seal line 200. EX1005, Fig. 1.

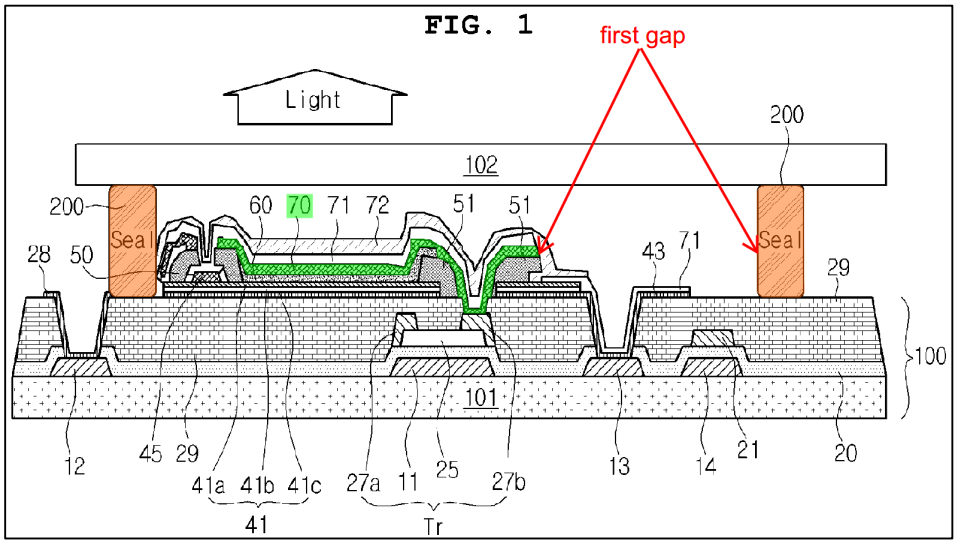

Lee discloses that "a seal line 200 is formed along an edge of a lower substrate 100." *Id.*, [0030]. Moreover, "the seal line 200 is formed on the dielectric substrate 101 by dispensing ultraviolet-setting sealant or thermosetting sealant on the dielectric substrate 101." *Id.*, [0047]. Therefore, seal line 200 is an isolating structure disposed around second electrode 70. *Id.*, Fig. 1; EX1003, ¶157.

Alternately, Fig. 1 of Lee shows the righthand buffer layer 50 and right hand seal line 200 which collectively are disposed around the second electrode 70, with

a first gap indicated by the red arrows added to annotated Fig. 1 below between the second electrode 70 and the seal line 200. EX1005, Fig. 1.

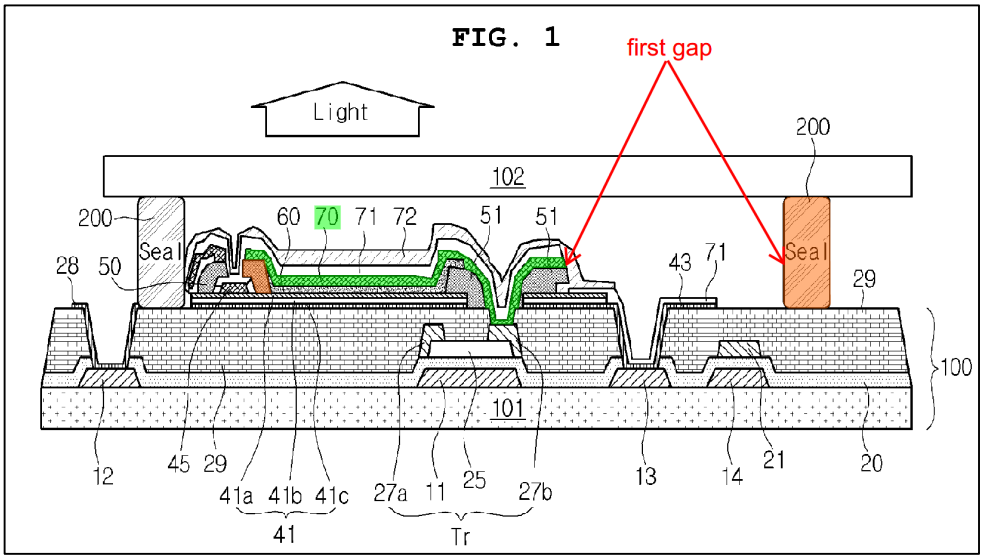

Lee discloses that "a seal line 200 is formed along an edge of a lower substrate 100." *Id.*, [0030]. Moreover, "the seal line 200 is formed on the dielectric substrate 101 by dispensing ultraviolet-setting sealant or thermosetting sealant on the dielectric substrate 101." *Id.*, [0047]. Further, "a buffer layer 50 defining a Sub-pixel region is formed by forming a dielectric film on the dielectric substrate 101 and patterning the dielectric film." *Id.*, [0024]. Therefore, righthand buffer layer 50 and right hand seal line 200 collectively are an isolating structure disposed around second electrode 70. *Id.*, Fig. 1; EX1003, ¶158.

3. [4b]

Lee in combination with Hekmatshoar or Weaver renders obvious "a second isolating structure (Lee's lefthand buffer layer 50) disposed at a side of the first

isolating structure (Lee's seal line 200, or alternatively Lee's righthand buffer layer 50 and right hand seal line 200), wherein the auxiliary electrode (Lee's electrode pattern 45) is disposed between the first isolating structure (Lee's seal line 200, or alternatively Lee's righthand buffer layer 50 and right hand seal line 200) and the second isolating structure (Lee's lefthand buffer layer 50), and the auxiliary electrode (Lee's electrode pattern 45) is electrically insulated from the first isolating structure (Lee's seal line 200, or alternatively Lee's righthand buffer layer 50 and right hand seal line 200) and the auxiliary electrode (Lee's electrode pattern 45) is electrically insulated from the second isolating structure (Lee's lefthand buffer layer 50)". EX1003, ¶¶159-163.

Claim 4 only recites the location of the second isolating structure, but not its structure or function. The 733 patent discloses that "the second isolating structure 140' and the first isolating structure 140 belong to the same layer, for example." EX1001, 7:34-36. The 733 patent further discloses "A material of the first isolating structure 140 is a photoresist or other suitable materials, for example." *Id.*, 5:37-42. However, the 733 patent does not expressly disclose what if anything is being isolated by the second isolating structure. *Id.*, 7:17-36; EX1003, ¶160. Therefore, a POSITA would have understood that the plain meaning of "second isolating structure" is a second structure of insulation material. EX1003, ¶160.

Fig. 1 of Lee shows that lefthand buffer layer 50 is disposed at a side of the seal line 200 (as evidenced in Fig. 1 where there is horizontal overlap between lefthand buffer layer 50 and seal line 200). EX1005, Fig. 1.

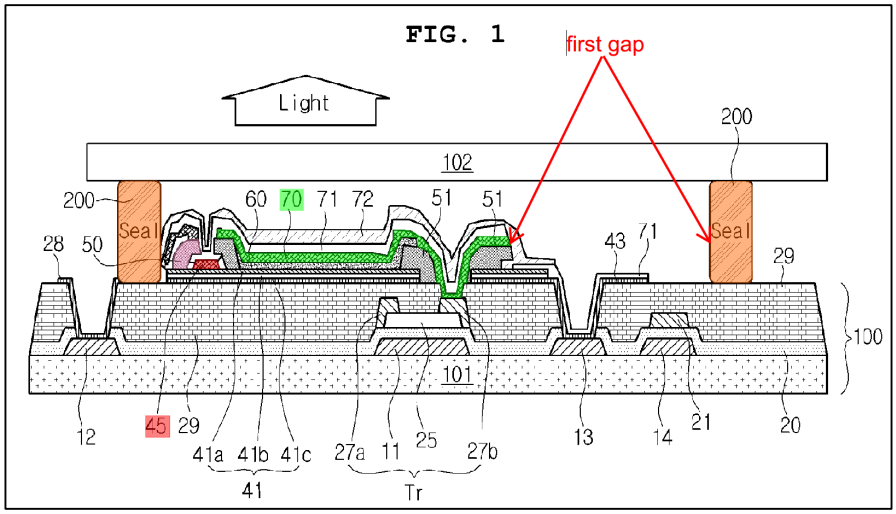

Lee discloses "a buffer layer 50 defining a Sub-pixel region is formed by forming a dielectric film on the dielectric substrate 101 and patterning the dielectric film" *Id.*, [0024]. Therefore, lefthand buffer layer 50 is an isolating structure. *Id.*, Fig. 1; EX1003, ¶162. Fig. 1 shows that electrode pattern 45 is disposed between the seal line 200 and lefthand buffer layer 50). Fig. 1 further shows that electrode pattern 45 is displaced from, and therefore electrically insulated from, Lee's seal line 200 and Lee's lefthand buffer layer 50)". EX1003, ¶162.

Alternately, Fig. 1 of Lee shows lefthand buffer layer 50 disposed at a side of Lee's righthand buffer layer 50 and right hand seal line 200 (as evidenced in Fig. 1 where there is horizontal overlap between lefthand buffer layer 50 and Lee's righthand buffer layer 50 and right hand seal line 200). EX1005, Fig. 1.

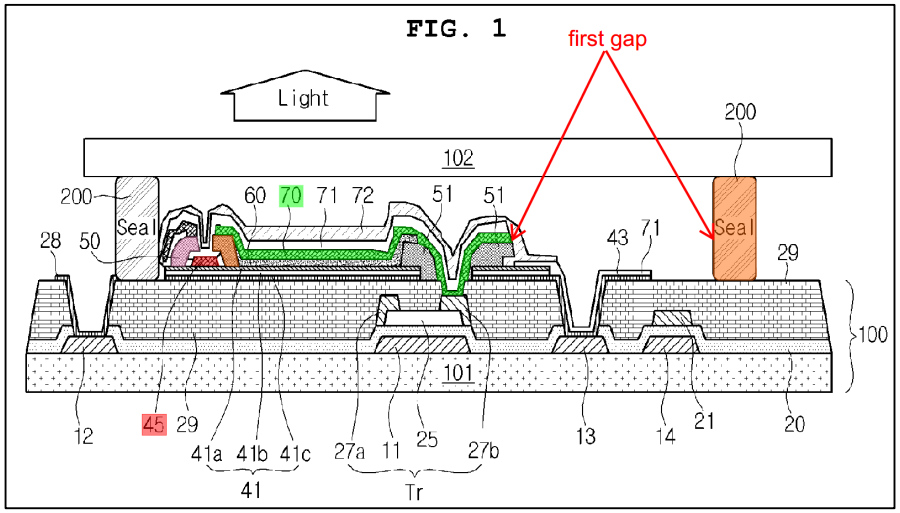

Lee discloses "a buffer layer 50 defining a Sub-pixel region is formed by forming a dielectric film on the dielectric substrate 101 and patterning the dielectric film" *Id.*, [0024]. Therefore, lefthand buffer layer 50 is an isolating structure. *Id.*, Fig. 1; EX1003, ¶163. Fig. 1 shows that electrode pattern 45 is disposed between Lee's righthand buffer layer 50 and right hand seal line 200 and Lee's lefthand buffer layer 50. Fig. 1 further shows electrode pattern 45 is displaced from, and therefore electrically insulated from, Lee's righthand buffer layer 50 and right hand seal line 200 and Lee's lefthand buffer layer 50". EX1003, ¶163.

F. Claim 5

Lee in combination with Hekmatshoar or Weaver renders obvious "the pixel structure (Lee's modified pixel structure in view of Hekmatshoar or Weaver) according to claim 1 (*see* claim 1), wherein the auxiliary electrode (Lee's electrode pattern 45) and the second electrode layer (Lee's second electrode 70) of the light emitting device belong to the same layer, and the auxiliary electrode (Lee's

electrode pattern 45) is electrically insulated from the second electrode layer (Lee's second electrode 70) of the light emitting device". EX1003, ¶¶164-166.

Fig. 1 of Lee shows that the electrode pattern 45 is electrically insulated from the second electrode 70 by buffer layer 50.

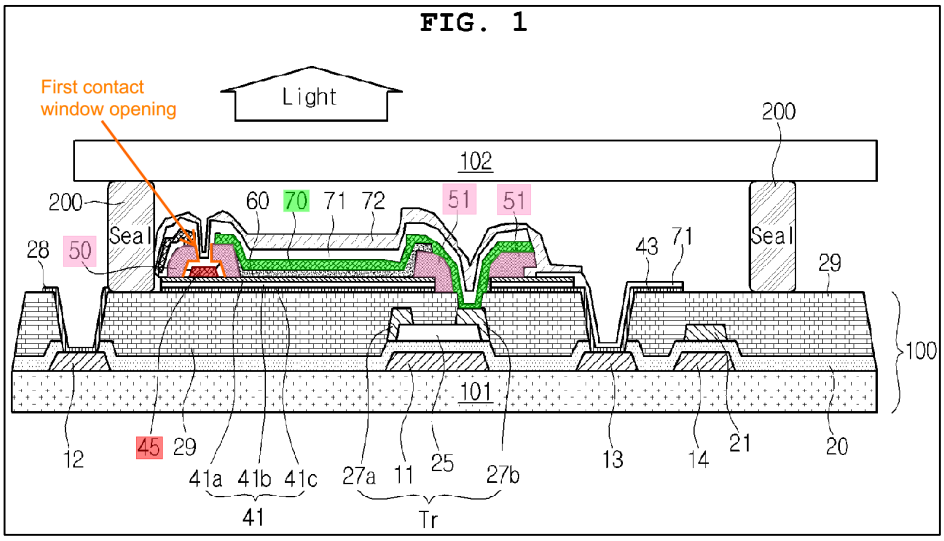

Lee further discloses:

> "When the buffer layer 50 is formed as described above, the organic electroluminescent layer 60 is formed at the sub-pixel region and subsequently a metal layer is formed on the dielectric substrate 101 to form the second electrode 70 on the organic electroluminescent layer 60. The metal layer is separated from the undercut region to form the second electrode 70 in the sub-pixel unit. At this point, the electrode pattern 45 is formed on the first electrode 41 at the undercut region of the buffer layer 50." EX1005, [0038].

A POSITA would have understood that Lee is disclosing that the metal layer deposited to formed second electrode 70 is also deposited through the first contact

window opening of buffer layer 50, which has the undercut region. The undercut region of first contact window opening is what serves to separate the second electrode 70 from the electrode pattern 45. Therefore, a POSITA would have understood that the second electrode 70 and the electrode pattern 45 belong to the same metal layer. EX1003, ¶166.

VII. GROUND 3: CLAIM 1 RENDERED OBVIOUS BY HEKMATSHOAR IN VIEW OF GUPTA OR HAN

The construction of "auxiliary electrode" applied for Ground is "supplemental electrode to reduce the total resistance of the pixel structure."

A. Claim 1

1. [1pre]

See §V.A.1.

2. [1a]

See §V.A.2.

3. [1b]

See §V.A.3.

4. [1c]

See §V.A.4.

5. [1d]

See §V.A.5

6. [1e]

See §V.A.6

7. [1f]

See §V.A.7

8. [1g]

See §V.A.8.

Hekmatshoar in combination with Gupta or Han renders obvious "an auxiliary electrode (Hekmatshoar's Interconnect modified with a parallel connection with ITO-anode) electrically insulated from the active device (TFT) and disposed at a side (i.e., the right side) of the light emitting device (OLED that includes layers ITO-anode, organic, cathode), wherein the auxiliary electrode (Interconnect) is electrically connected with the first electrode layer (ITO-anode) of the light emitting device (OLED)." EX1003, ¶¶168-178.

Figs. 3b and 6b of Hekmatshoar disclose the Interconnect is disposed on (and in electrical contact with) the first electrode layer (ITO-anode) of the light emitting device (OLED). EX1004, Figs. 3(b), 6(b).

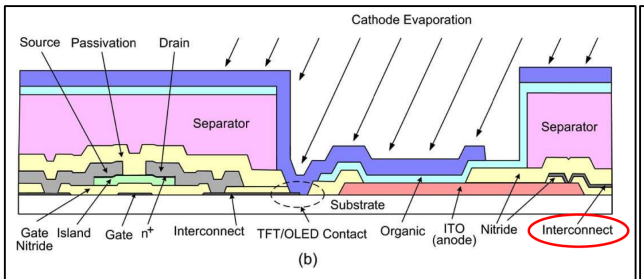

FIGURE 3 — Schematic cross section of the fabricated new "inverted" AMOLED structure of Fig. 1(c), during the evaporation of (a) the organic layers and (b) cathode.

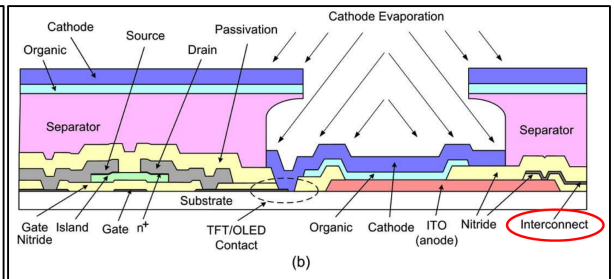

FIGURE 6 — Schematic cross section of the "modified" inverted AMOLED pixel, during the evaporation of (a) the organic layers and (b) cathode.

The Interconnect is disposed at a side (i.e., the right side) of the light emitting device (OLED that includes layers ITO-anode, organic, cathode). EX1004, Figs.

3(b), 6(b). Hekmatshoar discloses that the Interconnect is an electrode that is supplemental to other electrodes in the structure. *Id.*; EX1003, ¶169. Hekmatshoar does not expressly disclose that the Interconnect reduces the total resistance of the pixel structure.

Gupta discloses that an organic light emitting diode (OLED) "generally includes an anode, one or more organic layers, and a cathode." EX1007, 1:25-27. In top emission OLED, light is extracted from the cathode side, where the cathode is optically transparent and the anode is reflective. *Id.*, 1:39-41. Gupta identifies the need to reduce the sheet resistance of the common OLED electrode (indium-tin-oxide (ITO) and/or thin metals) in top emission OLEDs such that less power may be required from a power supply to operate the OLEDs. *Id.*, 1:44-61. Specifically, for inverted top emission OLEDs, "An additional voltage is required from the VDD due to the high sheet resistance 234B on the anode 230 which is the common electrode 232 in the inverted OLED." *Id.*, 8:6-8.

Gupta discloses a solution for an inverted top emission OLED sub-pixel 236 as shown in Fig. 2C, where the anode 230 (having an anode sheet resistance 234B) of the OLED sub-pixel 236 is connected to power supply VDD 202, and "a resistor 238 is added to be in parallel with the anode sheet resistance 234B to reduce the total resistance between anode 230 and VDD 202." *Id.*, 8:3-14, Fig. 2C.

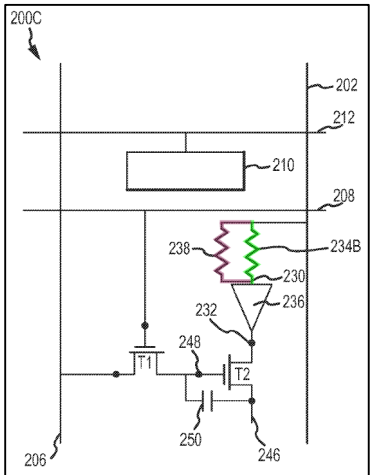

FIG.2C

The resistor 238 may be formed of a conductive mesh or strip. *Id.*, 7:42-43. For top emission AMOLED displays having such a conductive mesh or strip coupled to the common electrode (i.e., the anode 230) to reduce its sheet resistance, the "reduced sheet resistance of the common electrode helps save power consumption in operating the AMOLED displays." *Id.*, 4:55-60. Resistor 238 is a supplemental electrode that reduces the total resistance of the pixel structure that includes OLED sub-pixel 236 by providing an additional electrode (and additional current path) connected in parallel with the anode 230 and its sheet resistance 234B to the power supply VDD 202. EX1003, ¶171. In addition to inverted top emission OLEDs, Gupta also discloses the same solution (adding resistor 238 connected in parallel with the cathode sheet resistance 234) to reduce overall resistance for standard (non-inverted) top emission OLEDs. EX1007, 5:8-9, Figs. 2A and 2B.

Han discloses that an organic light emitting diode (OLED) can include an organic emission layer (EML) between an anode and a cathode, where the organic EML emits light when power is applied between the anode and the cathode. EX1008, [0008]. Specifically, organic EML (emission layer) 730 is interposed between an anode 720 and a cathode 740. *Id.*, [0030]-[0031], Fig. 7A.

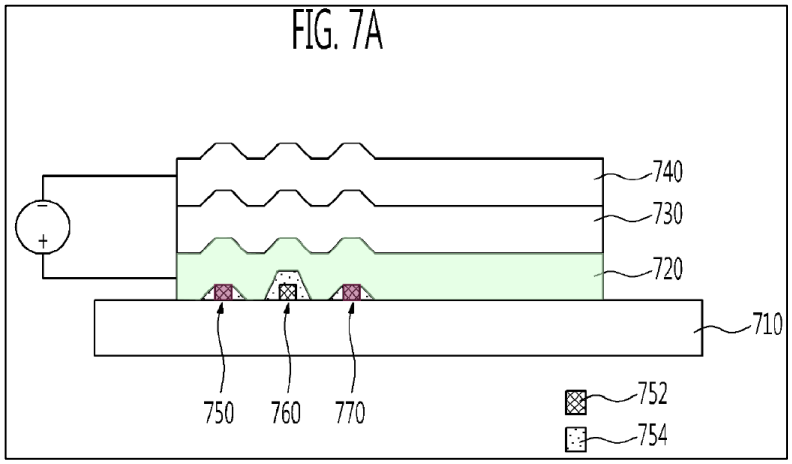

One problem with OLED's is that IR-drop that may occur due to resistance of components such as the anode and the cathode. *Id.*, [0009]. Han discloses a solution that includes the addition of "first and third subsidiary electrodes 750 and 770, which may be bonded to the anode 720 and function to reduce a resistance component of the anode 720." *Id.*, [0032]. Han further discloses that "each of the first and third subsidiary electrodes 750 and 770 may be electrically connected in parallel to the anode 720 in the emission region and function to reduce the influence of IR-drop due to a driving current." *Id.*, [0033]. First and third subsidiary electrodes 750 and 770 are supplemental electrodes that reduce the total

resistance of the pixel structure that includes the OLED by providing additional electrodes (and additional current paths) connected in parallel with the anode 720. EX1003, ¶172.

It would have been obvious to combine the teachings of Hekmatshoar and either Gupta or Han so that the Interconnect of Hekmatshoar is connected in parallel with the ITO-anode to voltage supply line Vdd in order to reduce the overall resistance of the pixel structure that includes the OLED. EX1003, ¶173.

Gupta, Han and Hekmatshoar are analogous prior art to the 733 patent because each relates to organic light emitting devices with an organic light emitting layer disposed between an anode electrode layer and a cathode electrode layer, as well as the surrounding layers and circuits to operate the light emitting devices. *Id.*, ¶174.

A POSITA would have understood the problem involved, namely that higher resistance between the power or ground line to the light emitting device would increase the IR-drop and power consumption to operate the OLEDs. EX1009, 1:58-61; EX1010, [0009]; EX1003, ¶175.

To overcome this problem, Gupta and Han disclose the solution of connecting the auxiliary electrode and the anode in parallel so as to reduce the total resistance of the pixel structure that includes the OLED. EX1003, ¶176. A POSITA would have been motivated to implement the solution of Gupta or Han in

the Hekmatshoar device to lower the resistance and voltage drop between the ITO-anode to voltage supply line Vdd of Hekmatshoar. *Id.*. This is consistent with the teachings of Hekmatshoar, which discloses concerns about uniformity using transparent conductive material (indium tin oxide – ITO) for its anode. EX1004, Abstract, p. 185-7.

The modification to Hekmatshoar could be implemented, for example, by connecting the Interconnection and ITO-anode of the OLED in parallel to the Vdd voltage source of Hekmatshoar. EX1003, ¶177; EX1004, Fig. 1(c).

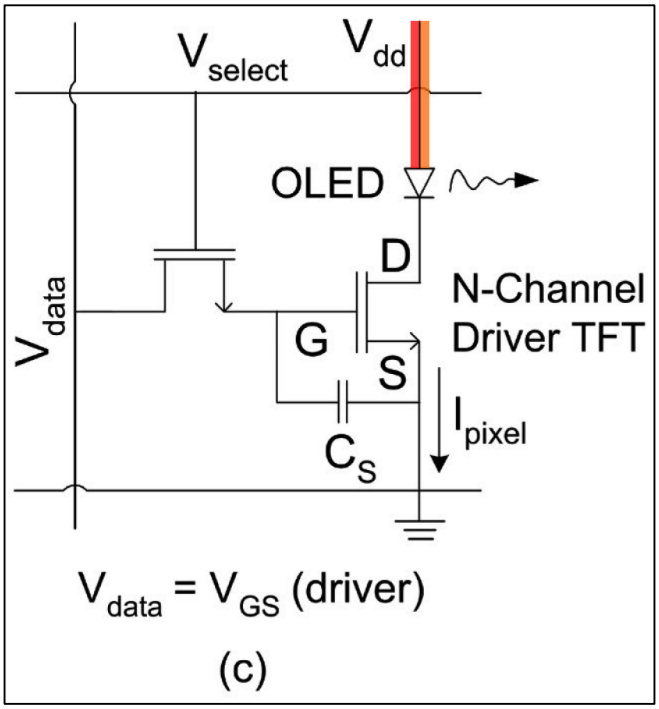

Alternately, the Interconnection could be connected in parallel to just a portion of the ITO-anode, which would still result in the Interconnection serving as a

supplemental electrode to reduce the total resistance of the pixel structure. EX1003, ¶177.

A POSITA would have had a reasonable expectation of success in combining Hekmatshoar with Gupta or Han, as all these references disclose the various electrodes and connections for operating an organic light emitting device with an anode and a cathode and an organic light emitting layer, and the modification to Hekmatshoar to implement the solution taught in Gupta or Han involves modifications of only routine skill in the art. *Id.*, ¶178. Moreover, because combining the teachings of Hekmatshoar and Gupta or Han would involve known methods, it would have yielded predictable results. *Id.*

VIII. DISCRETIONARY DENIAL IS NOT WARRANTED

A. 35 U.S.C. § 314(a) Analysis

The *Fintiv* factors (enumerated below) weigh against discretionary denial. IPR2020-00019, Paper 11, 5-6 (PTAB Mar. 20, 2020) (precedential).

1. Stay

This factor is neutral because no party has requested a stay. *Sand Revolution II, LLC. v. Continental Intermodal Group-Trucking LLC*, IPR2019-01393, Paper 24 at 7 (PTAB June 16, 2020).

2. Trial Date

No trial date has been set yet in the Litigation. Thus, this factor weighs against a discretionary denial.

3. Parallel Proceeding

Petitioner has not yet answered the Complaint. Accordingly, this factor weighs against a discretionary denial.

4. Issue Overlap

Petitioner challenges 5 claims. The Complaint in the Litigation explicitly asserts only 1. Accordingly, this IPR addresses significantly more invalidity issues than the Litigation and, therefore, this factor weighs against a discretionary denial.

5. Same Party

Because Petitioner and the PO are the parties in the Litigation, and because this Board is likely to reach the merits around the same time as the district court, this factor weighs slightly against discretionary denial. *See NVIDIA Corp. v. Invensas Corp.*, IPR2020-00603, Paper 11, at 23.

6. Other Considerations

Other considerations weigh strongly against a discretionary denial. The Challenged Claims are clearly invalid, Petitioners have not previously challenged any related patents based on the references relied upon in this petition, and the patent has never been challenged in a post-issuance proceeding. Thus, this factor weighs against a discretionary denial.

Even if the Board were to determine that *Fintiv* factors on balance weigh in favor of denial, institution should nonetheless be granted because this Petition

satisfies the compelling merits standards. Interim Guidance at 4; *Vizio, Inc. v. Maxell, Ltd.*, IPR2022-01458, Paper 8, at 62.

B. 35 U.S.C. § 325(b) Analysis

Applying the two-part framework discussed in *Advanced Bionics, LLC v. Med-El Elektromedizinische Gerate GMBH*, IPR2019-01469, Pap. 6, *8-9, the Board should not exercise its §325(d) discretion to deny institution.

None of the challenges are substantially the same as those considered during prosecution. In the event that the challenges herein are found to be based on prior art that is the same as or cumulative to prior art considered by the examiner during prosecution, the examiner has made a clear error in allowing the claims over such prior art. This is at least because the challenges in this Petition satisfy the compelling merits standard, and allowing the claims over such prior art is therefore clear error.

IX. COMPLIANCE WITH FORMAL REQUIREMENTS

A. Mandatory Notices Under 37 C.F.R. §§ 42.8(b)(1)-(4)

1. Real Party-In-Interest

BOE Technology Group Co., LTD is the real party-in-interest.

2. Related Matters

The 733 patent is subject to the following actions: *Optronic Sciences LLC v. BOE Technology Group Co., LTD,* 2:23-cv-00549 (EDTX).

3. Lead and Backup Counsel

Lead Counsel	Backup Counsel
Alan A. Limbach Reg. No. 39749 DLA Piper LLP (US) 3203 Hanover Street, Suite 100 Palo Alto, CA 94304-1123 Phone: + 1 650 833 2433 Fax: + 1 650 687 1182 Alan.Limbach@us.dlapiper.com	Brian Erickson Reg. No. 48895 DLA Piper LLP (US) 303 Colorado Street, Suite 3000 Austin, Texas 78701-4653 Phone: + 1 512 457 7000 Fax: + 1 512 721 2263 Brian.Erickson@us.dlapiper.com

4. Service Information

Please address correspondence to counsel at the addresses above. Petitioner consents to electronic service to: dla-boe-optronicsciences-IPR@us.dlapiper.com and the email addresses listed above.

B. Proof of Service on the Patent Owner

In accordance with 37 C.F.R. §§42.6(e) and 42.105, as identified in the attached Certificate of Service, a copy of this Petition in its entirety is being served electronically (by agreement) on counsel for Patent Owner in the District Court Litigation.

C. Power of Attorney

Powers of attorney are being filed with designation of counsel in accordance with 37 C.F.R. § 41.10(b).

D. Standing

In accordance with 37 C.F.R. §42.104(a), Petitioner certifies that the 733 patent is available for *inter partes* review and that Petitioner is not barred or estopped from requesting an *inter partes* review challenging the patent claims on the grounds identified in this Petition.

E. Fees

The undersigned authorizes the Director to charge the fee specified by 37 C.F.R. § 42.15(a) and any additional fees that might be due in connection with this Petition to Deposit Account No. 07-1896.

X. CONCLUSION

All Challenged Claims of the 733 patent should be found unpatentable for the reasons discussed in this Petition.

Respectfully submitted,

/Alan A. Limbach/

Alan A. Limbach
Reg. No. 39749
DLA Piper LLP (US)
3203 Hanover Street, Suite 100
Palo Alto, CA 94304-1123
Phone: + 1 650 833 2433
Fax: + 1 650 687 1182
Alan.Limbach@us.dlapiper.com

Attorney for Petitioner, BOE Technology Group Co., LTD.

CERTIFICATE OF WORD COUNT

Pursuant to 37 C.F.R. § 42.24(d), Petitioner certifies that this petition includes 10,225 words, as measured by Microsoft Word, exclusive of the table of contents, mandatory notices under § 42.8, certificates of service, word count, claim listing, and exhibits.

Date: July 5, 2024

/Alan A. Limbach/
Alan A. Limbach
Reg. No. 39749
DLA Piper LLP (US)
3203 Hanover Street, Suite 100
Palo Alto, CA 94304-1123
Phone: + 1 650 833 2433
Fax: + 1 650 687 1182
Alan.Limbach@us.dlapiper.com

Attorney for Petitioner, BOE Technology Group Co., LTD.

CERTIFICATE OF SERVICE

The undersigned certifies pursuant to 37 C.F.R. §§ 42.6(e) and 42.105 that on July 5, 2024, a true and correct copy of the Petition for Inter Partes Review of U.S. Patent No. 9,406,733 was served by emailing a copy of same (by agreement) to the following attorneys for the Patent Owner:

Benjamin T. Wang (bwang@raklaw.com)

Christian Conkle (cconkle@raklaw.com)

Alexandra Loew (aloew@raklaw.com)

Qi Peter Tong (ptong@raklaw.com)

Respectfully submitted,

/Alan A. Limbach/

Alan A. Limbach
Reg. No. 39749
DLA Piper LLP (US)
3203 Hanover Street, Suite 100
Palo Alto, CA 94304-1123
Phone: + 1 650 833 2433
Fax: + 1 650 687 1182
Alan.Limbach@us.dlapiper.com

Attorney for Petitioner, BOE Technology Group Co., LTD.