(12) INTERNATIONAL APPLICATION PUBLISHED ACCORDING TO THE PATENT COOPERATION TREATY (PCT)

(19) World Intellectual Property Organization
International Bureau

(43) International Date of Publication
July 29, 2004 (07/29/2004)

PCT

(10) International Number of Publication
WO 2004/063042 A2

(51) International Patent Classification[7]: B65D 47/20

(21) International File No.: PCT/AT2004/000010

(22) International Application Date:
January 16, 2004 (01/16/2004)

(25) Filing language: German

(26) Publication language: German

(30) Priority details:
A 52/2003 January 16, 2003 (01/16/2003) AT

(71) Applicant and
(72) Inventor: **DRAZDANSKY, Erich** [AT/AT]; Altstrasse 39, A-2630 Ternitz (AT)

(72) Inventor; and
(75) Inventor/Applicant (*only for US*): **RIBARITS, Peter** [AT/AT], Pelzgasse 13/22, A-1150 Vienna (AT).

(81) Designated States (*if not stated otherwise, for each available national type of protective right*): AE, AG, AL, AM, AT, AU, AZ, BA, BB, BG, BR, BW, BY, BZ, CA, CH, CN, CO, CR, CU, CZ, DE, DK, DM, DZ, EC, EE, EG, ES, FI, GB, GD, GE, GH, GM, HR, HU, ID, IL, IN, IS, JP, KE, KG, KP, KR, KZ, LC, LK, LR, LS, LT, LU, LV, MA, MD, MG, MK, MN, MW, MX, MZ, NA, NI, NO, NZ, OM, PG, PH, PL, PT, RO, RU, SC, SD, SE, SG, SK, SL, SY, TJ, TM, TN, TR, TT, TZ, UA, UG, US, UZ, VC, VN, YU, ZA, ZM, ZW.

(84) Designated States (*if not stated otherwise, for each available regional type of protective right*): ARIPO (BW, GH, GM, KE, LS, MW, MZ, SD, SL, SZ, TZ, UG, ZM, ZW), Eurasian (AM, AZ, BY, KG, KZ, MD, RU, TJ, TM), European (AT, BE, BG, CH, CY, CZ, DE, DK, EE, ES, FI, FR, GB, GR, HU, IE, IT, LU, MC, NL, PT, RO, SE, SI, SK, TR), OAPI (BF, BJ, CF, CG, CI, CM, GA, GN, GQ, GW, ML, MR, NE, SN, TD, TG).

Declarations pursuant to Rule 4.17:
- In view of the authority of the Applicant to apply for and obtain a patent (Rule 4.17, Item ii) for the following designated states: AE, AG, AL, AM, AT, AU, AZ, BA, BB, BG, BR, BW, BY, BZ, CA, CH, CN, CO, CR, CU, CZ, DE, DK, DM, DZ, EC, EE, EG, ES, FI, GB, GD, GE, GH, GM, HR, HU, ID, IL, IN, IS, JP, KE, KG, KP, KR, KZ, LC, LK, LR, LS, LT, LU, LV, MA, MD, MG, MK, MN, MW, MX, MZ, NA, NI, NO, NZ, OM, PG, PH, PL, PT, RO, RU, SC, SD, SE, SG, SK, SL, SY, TJ, TM, TN, TR, TT, TZ, UA, UG, UZ, VC, VN, YU, ZA, ZM, ZW, ARIPO Patent (BW, GH, GM, KE, LS, MW, MZ, SD, SL, SZ, TZ, UG, ZM, ZW), Eurasian Patent (AM, AZ, BY, KG, KZ, MD, RU, TJ, TM), European Patent (AT, BE, BG, CH, CY, CZ, DE, DK, EE, ES, FI, FR, GB, GR, HU, IE, IT, LU, MC, NL, PT, RO, SE, SI, SK, TR), OAPI Patent (BF, BJ, CF, CG, CI, CM, GA, GN, GQ, GW, ML, MR, NE, SN, TD, TG).

[To be continued on the next page]

(54) Title: DRINKING DEVICE

(57) Abstract: The invention relates to a drinking device which enables a drink to be drunk in a pleasant, hygienic manner, and can be both opened and closed with one hand. Said device ensures a completely secure closure and a good dosability, and meets all hygienic and aesthetic requirements. Furthermore, the inventive drinking device cannot be accidentally opened if subjected to pressure by means of the carbonic acid contained in the liquid. Said drink closing element consists of a closing cap (1), a sealed tubular element (2) inserted into said cap, and a drinking spout (3) which is fixed in the lateral parts (11) by two axial pins (4), and in which the sealed tubular element (2) is inserted. The invention is characterized in that when the closing cap (1) is screwed onto the bottle (5), the required tightness is obtained by means of the sealing rings (10), and in that the knobs (8) applied to the lateral parts (11) engage in the recesses (9) on the drinking spout (3). The properties enumerated according to the invention are the pre-requisites for achieving the functions described and the resulting use of said drinking device.

WO 2004/063042 A2

Trove Brands Ex. 1006
IPR Petition - USP 10,676,255

– *Inventor's Declaration (Rule 4.17 Item iv) only for US*

Published:
– *without International Search Report and to be republished upon receipt of the report*

Concerning the explanation of the two-letter code and the other abbreviations, reference is made to the explanations ("Guidance Notes on Codes and Abbreviations") at the beginning of each regular issue of the PCT Gazette.

The invention relates to a device for comfortably drinking and portioning from one of the bottles common today.

In order to nowadays have the possibility of drinking from a bottle, or of pouring liquid into another container, one can either remove the closure and then withdraw the liquid from the normal bottle opening, or one uses a commercially available push-pull closure in which, after the upper drinking part has been pulled out, a dosed amount of liquid can be withdrawn.

However, in both variants, it is required to use both hands for this procedure, where in the first variant, drinking is aesthetically not very attractive, and moreover there are objections due to a lack of hygiene.

The problems of it being required to use both hands is a big disadvantage in particular during cycling, driving a car, and also during diverse activities and sports activities when, for safety reasons or due to functionality, one hand is blocked. Furthermore, it is nowadays very common for beverages to contain carbonic acid.

Though it is not very much, a pressure of at least about 0.6 bar occurs.
When the bottle is agitated, either during transport, during cycling, etc., the push-pull closure can jump up due to the pressure, and the liquid is poured into the surroundings.

The patents present today do not offer a satisfactory solution, mainly with respect to the last listed item:

While in Patent DE 83 35 960 U (Menshen) of March 8, 1984, a toggle lever mounted about the center axis is mentioned, this arrangement is technically by no means suited to absorb the pressure occurring due to the carbonic acid and to guarantee complete tightness. At most, it is designed to portion pasty substances, but not liquids containing a proportion of carbonic acid.

Furthermore, in Patent EP 0452 196 A1 (Peuscet) of October 16, 1991, a portioning system is shown in which, by rotating the closing cap via a thread, a firmly pressed-on valve stem is released. By this opening, or else via a pivoting spout, the cream can be portioned. In the threaded variant, both hands have to be used, and in the spout variant, the tightness for liquids is technically not given.

Equally, in the Patent/Utility Model DE 88 15 614 U1 (Suffa GmbH) of
March 23, 1989, a dispensing device is shown which moves the closing device via a centrically arranged bearing. This arrangement, too, cannot technically guarantee the required tightness.

Similar to the first Patent by Menshen, in Patent DE 26 58 590 A1 of June 29, 1978, a device is shown in which a centrically mounted toggle lever releases or closes a dispensing opening. Here, too, at most a tightness for creamy substances can be achieved.

Patent FR 2 684 354 A1 (L'Oreal) of June 4, 1993, also essentially deals with a

dispensing device for pasty substances.

It is an object of the invention to avoid the aforementioned respective disadvantages and to suggest a drinking device which enables both to open and close it with one hand, which guarantees a completely secure closing, which cannot be accidentally opened in particular in case of a high pressure by activated carbonic acid additives, furthermore enables a good disability, and also meets all hygienic and aesthetic requirements.

This technical problem is solved by a drinking device of the type mentioned in the beginning by the features pointed out in claim 1.

The invention solves the technical problem indicated above by a drinking spout being pivoted at the top in a common closing cap provided with a thread.

Equally, a sealed tubular element of rubber or latex is inserted in both these parts.

If one now wants to drink from this drinking device screwed onto a PET bottle, the following mechanism disclosed according to the patent is initiated.

In the lateral parts placed at the top of the closing cap, the drinking spout is movably mounted by means of both axles. When the drinking spout is pivoted open, the elastic tube inserted therein is straightened and the opening is thus released. The liquid located in the bottle can now be withdrawn via the tube guided in the drinking spout, wherein the tightness is given by screwing the neck of the bottle onto the sealing part of this element.

If now the device is to be closed, by folding down the drinking spout, the tube is bent between the outlet opening of the closing cap and the accommodation in the drinking spout by means of the two webs, and the device is closed.

A securing mechanism is installed to avoid an accidental opening. Two recesses laterally attached in the lateral parts into which the knobs attached to the drinking spout snap in prevent an accidental opening of the drinking spout.

Further advantageous embodiments of the invention are given in the subclaims 2 to 6.

The invention will now be described more in detail with reference to an exemplified embodiment and the enclosed drawings:

Figure 1 shows the drinking device in a perspective view in the position CLOSED and in the position OPENED, screwed onto a bottle. Figure 2 shows the individual components of the drinking device in a perspective view. In Figure 3, the drinking device is shown in a section in the position OPEN and in the position CLOSED, as well as in a top view.

PATENT CLAIMS

1. Drinking device, consisting of a closing cap (1), a sealed tubular element (2) inserted therein, and a drinking spout (3) which is fixed in the lateral parts (11) by two axial pins (4), wherein the sealed tubular element (2) is inserted into the drinking spout (3), characterized in that when the closing cap (1) is screwed onto the bottle (5), the required tightness is obtained by means of the sealing rings (10), and in that the knobs (8) applied to the lateral parts (11) engage in the recesses (9) on the drinking spout (3).

2. Drinking device according to claim 1, characterized in that the sealed tubular element (2) has, in its broad sealing surface, one or several projecting sealing rings (10).

3. Drinking device according to claims 1 and 2, characterized in that the sealed tubular element (2) has a bellow-shaped formation (13) in the tube section.

4. Drinking device according to claims 1 to 3, characterized in that the sealed tubular element (2) is made of rubber or of plastics.

5. Drinking device according to claims 1 to 4, characterized in that the recess (9) is embedded at the lateral parts (11) and the knobs (8) are located on the drinking spout (3).

6. Drinking device according to claims 1 to 5, characterized in that the closing cap (1) can have various thread shapes and diameters and can also have other closing systems, such as bayonet catches or friction closures.

7. Drinking device according to claims 1 to 6, characterized in that in the drinking spout (3), a broadening of the outlet opening (12) enables a snapping of the sealed tubular element (2).

FIG.1

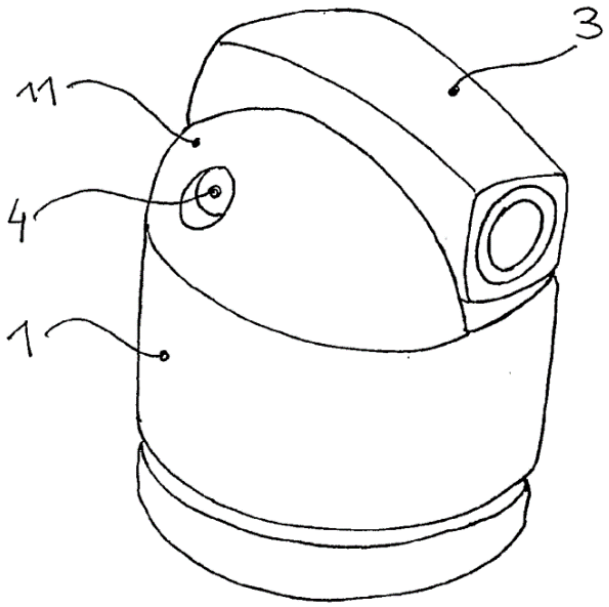

Position: closed

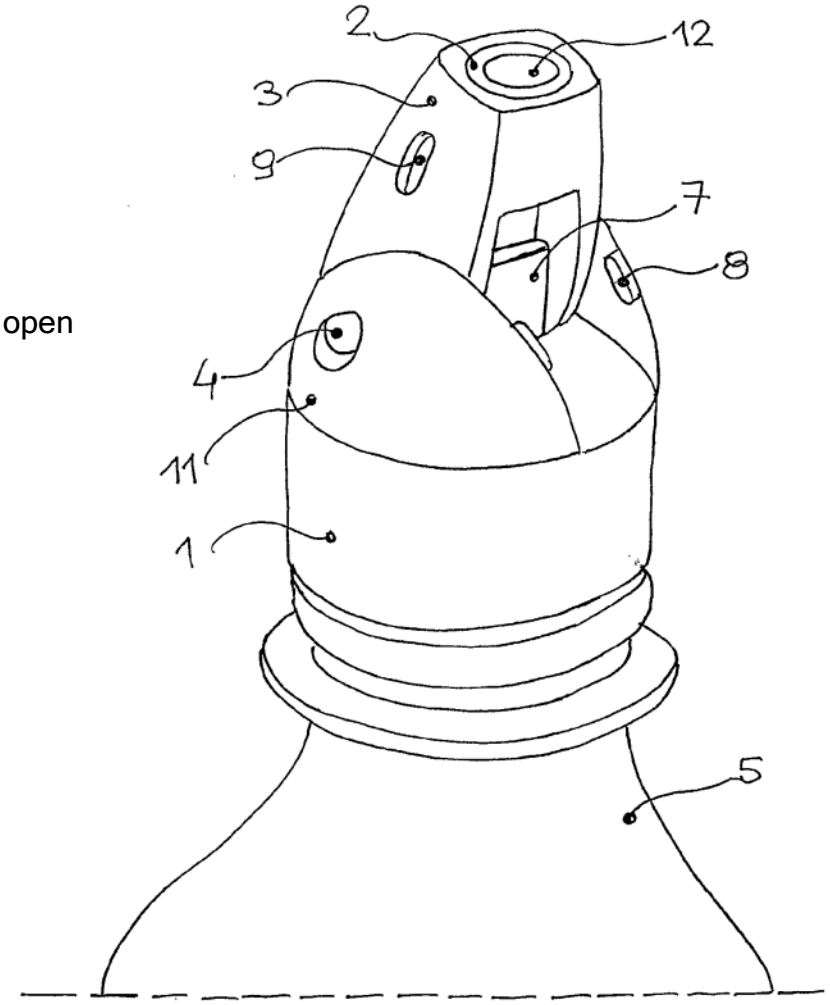

Position: open

FIG.2

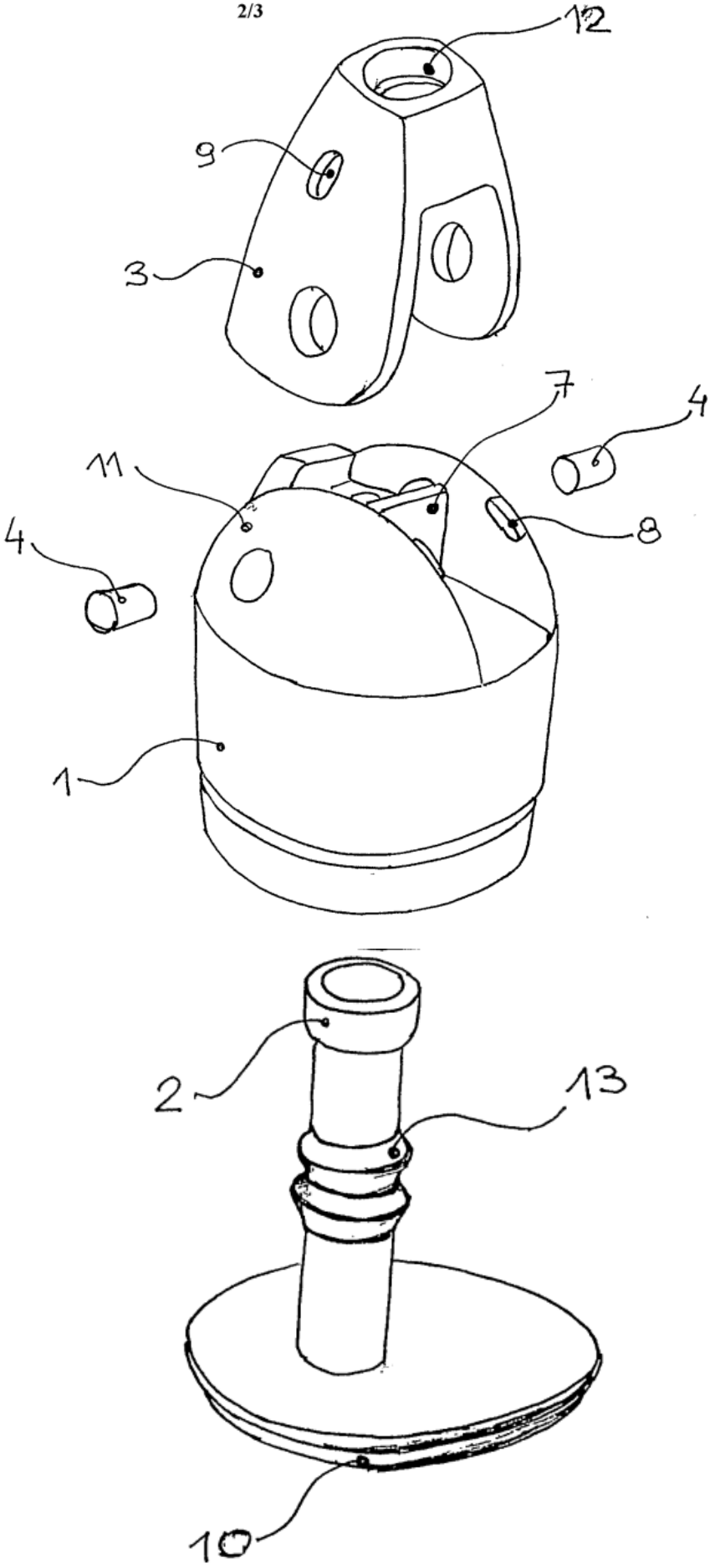

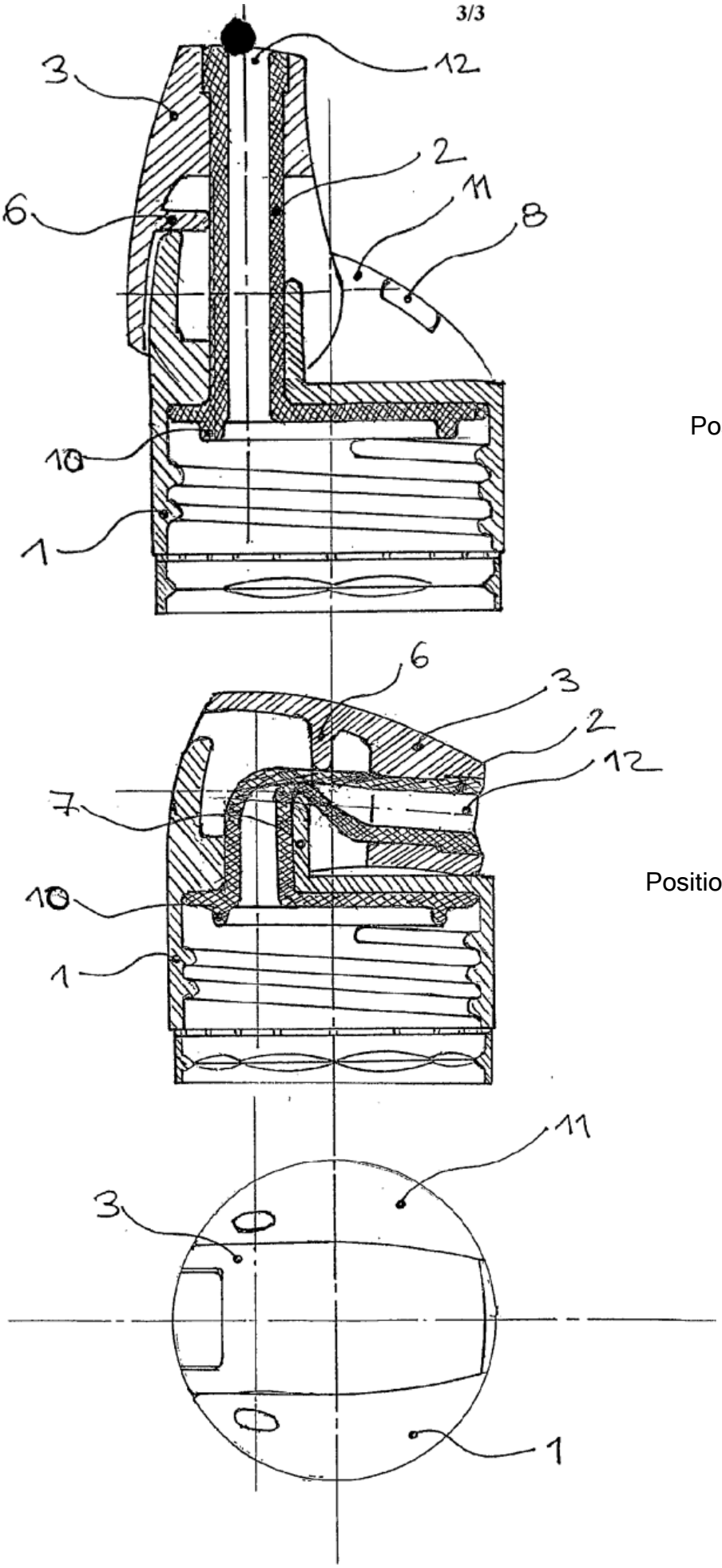

FIG.3

Position: open

Position: closed