Trials@uspto.gov
571-272-7822

Paper 9
Date: January 28, 2025

UNITED STATES PATENT AND TRADEMARK OFFICE

BEFORE THE PATENT TRIAL AND APPEAL BOARD

TROVE BRANDS, LLC,
Petitioner,

v.

CAMELBAK PRODUCTS, LLC,
Patent Owner.

IPR2024-01137
Patent 10,676,255 C1

Before HYUN J. JUNG, CARL M. DEFRANCO, and NATHAN A. ENGELS, *Administrative Patent Judges*.

ENGELS, *Administrative Patent Judge*.

DECISION
Granting Institution of *Inter Partes* Review
35 U.S.C. § 314

CamelBak Products, LLC is the owner of U.S. Patent No. 10,676,255 C1 (Ex. 1001, "the '255 patent"). Trove Brands, LLC filed a Petition for *inter partes* review of the '255 patent, challenging claims 1–7 and 9–23. *See* Paper 1 ("Pet."). CamelBak filed a Preliminary Response. *See* Paper 6 ("Prelim. Resp."). Exercising our jurisdiction under 35 U.S.C. § 314(a), we institute *inter partes* review of the challenged claims.

I. BACKGROUND

A. Related Matters

The '255 patent is the subject of a parallel district court action: *Trove Brands, LLC v. CamelBak Products, LLC*, No. 5:23-cv-04267 (N.D. Cal. Aug. 21, 2023). Pet. 1; Paper 3, 2.

B. Real Parties-in-Interest

Petitioner identifies itself as the real party-in-interest. Pet. 1. Patent Owner identifies itself and Vista Outdoors Inc. as real parties-in-interest. Paper 3, 2.

C. The '255 Patent

The '255 patent is titled "Drink Bottles" and discloses a drink container with cap assembly that includes a resilient mouthpiece pivotally coupled to a base of the cap assembly. Ex. 1001, codes (54), (57). Reproduced below is Figure 25 of the '255 patent as annotated by Petitioner.

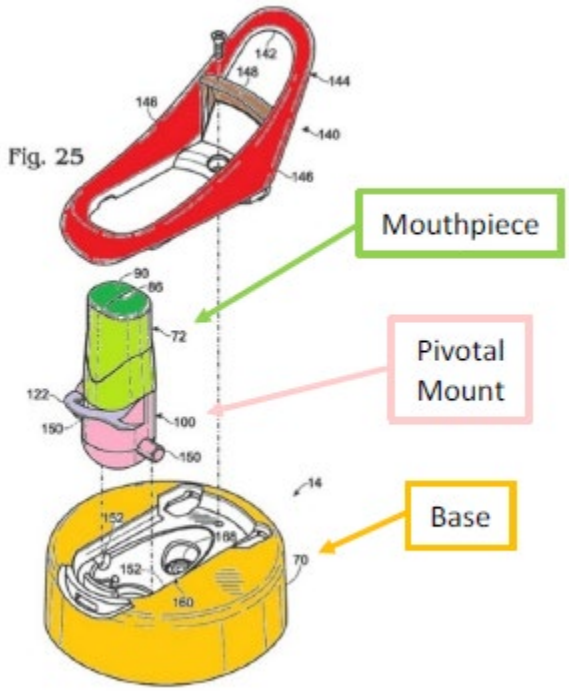

Pet. 11. Petitioner's annotated version of Figure 25 depicts mouthpiece 72 shaded green, pivot mount 100 having protrusions 150 shaded pink, and base 70 shaded yellow.

D. Challenged Claims

Of the challenged claims, claims 1 and 20 are independent. Claim 1, copied below with Petitioner's bracketed labels added, is illustrative of the claimed subject matter. The parties note that independent claim 20 is identical to claim 1 with an additional limitation reciting aspects of a "dust cover." Pet. 16; Prelim. Resp. 7.

1. A drink container comprising:

1[a] a fluid container having a neck with an opening and having an internal compartment sized to hold a volume of potable drink fluid;

1[b] a cap assembly removably coupled to the fluid container to cover the opening, wherein the cap assembly defines a fluid conduit for drink fluid to flow from the fluid container and

through the cap assembly to a user, wherein the fluid conduit includes an inlet through which drink fluid from the fluid container may enter the fluid conduit, and a dispensing outlet through which drink fluid in the fluid conduit may be dispensed from the cap assembly to a user, and further wherein the cap assembly comprises:

1[b][1] a cap assembly base removably coupled to the neck of the fluid container, wherein the cap assembly base is configured to be selectively and repeatedly decoupled from and re-coupled to the neck of the fluid container;

1[b][2] a pivotal mount coupled to the cap assembly base for pivotal movement relative to the cap assembly base, the pivotal mount comprising a mount outlet, wherein the pivotal mount includes a pair of lateral projections, wherein the cap assembly base defines a pair of sockets into which the pair of lateral projections extend;

1[b][3] a resilient mouthpiece engaged with the mount outlet and removably coupled to the pivotal mount for pivotal movement with the pivotal mount relative to the cap assembly base, [1[b][3][i]] wherein the resilient mouthpiece is pivotal about an axis defined by the pair of lateral projections as the pair of lateral projections rotate within the pair of sockets;

1[b][3][ii] wherein the resilient mouthpiece defines a portion of the fluid conduit, including the dispensing outlet;

1[b][3][iii] wherein the resilient mouthpiece and the pivotal mount are configured to be selectively pivoted between a stowed position and a dispensing position, and further in the dispensing position, the dispensing outlet is positioned further away from the cap assembly base than when the resilient mouthpiece and the pivotal mount are in the stowed position;

1[b][3][iv] wherein the resilient mouthpiece is adapted to resiliently compress responsive to compressive forces applied to the resilient mouthpiece by a user's teeth; and

1[b][4] a manual on/off valve having a closed configuration, in which the manual on/off valve obstructs the fluid conduit to restrict drink fluid from flowing between the inlet and the dispensing outlet, and an open configuration, in which the manual on/off valve permits drink fluid to flow through the fluid conduit from the inlet to the dispensing outlet; wherein the manual on/off valve includes a flexible tube that defines a portion of the fluid conduit;

1[b][4][i] wherein when the manual on/off valve is in the closed configuration, the tube is crimped to obstruct the flow of drink fluid through the fluid conduit; and

1[b][4][iii] wherein when the manual on/off valve is in the open configuration, the tube is not crimped and does not obstruct the flow of drink fluid through the fluid conduit.

E. Asserted Challenges

Claims Challenged	35 U.S.C. §[1]	Basis
1, 3–5, 9–11, 13, 18, 19	103	Nakajima[2]
12, 14–16	103	Nakajima, Gardner[3]
1, 9, 11, 13, 17–19	102, 103	Ribarits[4]
2–7, 20–23	103	Ribarits, Panicci,[5] Hughes[6]

[1] The Leahy-Smith America Invents Act ("AIA"), Pub. L. No. 112–29, 125 Stat. 284 (2011), amended 35 U.S.C. § 103, effective March 16, 2013. Both parties state that the challenged claims of the '255 patent claim priority to applications filed in 2005, prior to the AIA. Pet. 17; Prelim. Resp. 13. Accordingly, we apply the pre-AIA version of § 103, but our Decision would not substantively change under the AIA version of § 103.
[2] JP 2002-211613; published July 31, 2002. Ex. 1004 (certified translation).
[3] US 6,070,767; issued June 6, 2000. Ex. 1005.
[4] WO 2004/063042; published July 29, 2004. Ex. 1006.
[5] US 4,485,963; issued Dec. 4, 1984. Ex. 1007.
[6] US 6,523,711 B1; issued Feb. 25, 2003. Ex. 1010.

Pet. 17. Petitioner also relies on the declaration testimony of Glenn E. Vallee, Ph.D. (Ex. 1003), among other evidence.

II. ANALYSIS

A. Discretionary Denial Under 35 U.S.C.§ 314(a)

Institution of *inter partes* review is discretionary. *See Harmonic Inc. v. Avid Tech., Inc.*, 815 F.3d 1356, 1367 (Fed. Cir. 2016) ("the [U.S. Patent and Trademark Office] is permitted, but never compelled, to institute an IPR proceeding"). Patent Owner requests that we exercise our discretion to deny institution under 35 U.S.C. § 314(a), citing *Apple Inc. v. Fintiv Inc.*, IPR2020-00019, Paper 11 (PTAB Mar. 20, 2020) (precedential). Prelim. Resp. 64–76.

Our consideration of discretionary denials is guided by the Director's Interim Procedure for Discretionary Denials in AIA Post-Grant Proceedings with Parallel District Court Litigation, issued on June 21, 2022 ("Memorandum").[7] The Memorandum states that, consistent with *Sotera Wireless, Inc. v. Massimo Corp.*, IPR2020-01019, Paper 12 (PTAB Dec. 1, 2020) (precedential), "the PTAB will not discretionarily deny institution in view of parallel district court litigation where a petitioner presents a stipulation not to pursue in a parallel proceeding the same grounds or any grounds that could have reasonably been raised before the PTAB." Memorandum, 3 (footnote and emphasis omitted).

[7] *Available at* https://www.uspto.gov/sites/default/files/documents/interim_proc_discretionary_denials_aia_parallel_district_court_litigation_memo_20220621_.pdf.

Here, Petitioner filed a *Sotera* stipulation. Paper 7. Accordingly, following the Memorandum, we do not exercise our discretion to deny institution.

B. Legal Standards

"In an [*inter partes* review], the petitioner has the burden from the onset to show with particularity why the patent it challenges is unpatentable." *Harmonic Inc. v. Avid Tech., Inc.*, 815 F.3d 1356, 1363 (Fed. Cir. 2016) (citing 35 U.S.C. § 312(a)(3) (requiring *inter partes* review petitions to identify "with particularity . . . the evidence that supports the grounds for the challenge to each claim")). This burden of persuasion does not shift to Patent Owner. *See Dynamic Drinkware, LLC v. Nat'l Graphics, Inc.*, 800 F.3d 1375, 1378 (Fed. Cir. 2015) (citing *Tech. Licensing Corp. v. Videotek, Inc.*, 545 F.3d 1316, 1326–27 (Fed. Cir. 2008)) (discussing the burden of proof in *inter partes* review).

A patent claim is unpatentable under 35 U.S.C. § 103 if the differences between the claimed subject matter and the prior art are "such that the subject matter as a whole would have been obvious at the time the invention was made to a person having ordinary skill in the art to which said subject matter pertains." *KSR Int'l Co. v. Teleflex Inc.*, 550 U.S. 398, 406 (2007). The question of obviousness is resolved based on underlying factual determinations, including: (1) the scope and content of the prior art; (2) any differences between the claimed subject matter and the prior art; (3) the level of skill in the art; and (4) objective evidence of nonobviousness,[8] i.e.,

[8] The present record contains no arguments regarding objective evidence of nonobviousness.

secondary considerations. *See Graham v. John Deere Co.*, 383 U.S. 1, 17–18 (1966).

C. Level of Ordinary Skill in the Art

Petitioner contends that a person of ordinary skill in the art would have had "an undergraduate degree in mechanical engineering or equivalent coursework, and a year or more of experience in designing, prototyping, and/or manufacturing fluid containers or similar products." Pet. 18 (citing Ex. 1003 ¶ 26). Patent Owner states that it applies the level of skill set forth in the Petition. Prelim. Resp. 35. At this stage, we apply Petitioner's proposed definition, as it appears reasonable and consistent with the level of skill reflected in the asserted prior art and the '255 patent.

D. Claim Construction

We construe claims using the principles set forth in *Phillips v. AWH Corp.*, 415 F.3d 1303, 1312–17 (Fed. Cir. 2005) (en banc) and related cases. 37 C.F.R. § 42.100(b) (2021). Under that precedent, the words of a claim are generally given their "ordinary and customary meaning," which is the meaning the term would have to a person of ordinary skill at the time of the invention, in the context of the entire patent including the specification. *Phillips*, 415 F.3d at 1312–13.

Petitioner states that no claim terms require construction but that "[i]n certain circumstances, . . . th[e] Petition is based on [Patent Owner]'s allegations that the '255 patent covers Petitioner's Owala Flip (For Kids) product and the scope of the claims as asserted by [Patent Owner] in the co-pending district court litigation." Pet. 19 (citing Ex. 1013).

Patent Owner contends that "adapted to" in independent claims 1 and 20 means "'designed or configured to' and is not satisfied by mere

hypothetical capability." Prelim. Resp. 36; *see* Prelim. Resp. 36–41. We address Patent Owner's arguments below with our discussion of Petitioner's Ribartis-based arguments.

Based on the current record, however, we determine that it is not necessary to provide an express interpretation of any claim terms at this stage of the proceeding. *See Realtime Data, LLC v. Iancu*, 912 F.3d 1368 (Fed. Cir. 2019) ("The Board is required to construe 'only those terms . . . that are in controversy, and only to the extent necessary to resolve the controversy.'" (quoting *Vivid Techs., Inc. v. Am. Sci. & Eng'g, Inc.*, 200 F.3d 795, 803 (Fed. Cir. 1999)).

E. Alleged Obviousness

1. Nakajima-based Challenges

Petitioner presents claim-by-claim, limitation-by-limitation comparisons of claims 1, 3–5, 9–11, 13, 18, and 19 to Nakajima (Pet. 21–51) and of claims 12 and 14–16 to the combination of Nakajima and Gardner, including reasons for combining the references' teachings (Pet. 51–64). Patent Owner primarily addresses Petitioner's showings for Limitation 1[b][3][i] of independent claim 1 as representative of the alleged deficiencies in Nakajima-based challenges. Prelim. Resp. 41–50. We address the parties' arguments and evidence below.

a. Petitioner's Showings

Petitioner contends Nakajima discloses a drink container having a mouthpiece (Pet. 21), a cap assembly (Pet. 22–23), a cap assembly base (Pet. 24), and a pivotal mount (Pet. 24–27). Among other things, Petitioner provides an annotated version of Nakajima's Figure 1, reproduced below, to illustrate its contentions regarding the pivotal mount.

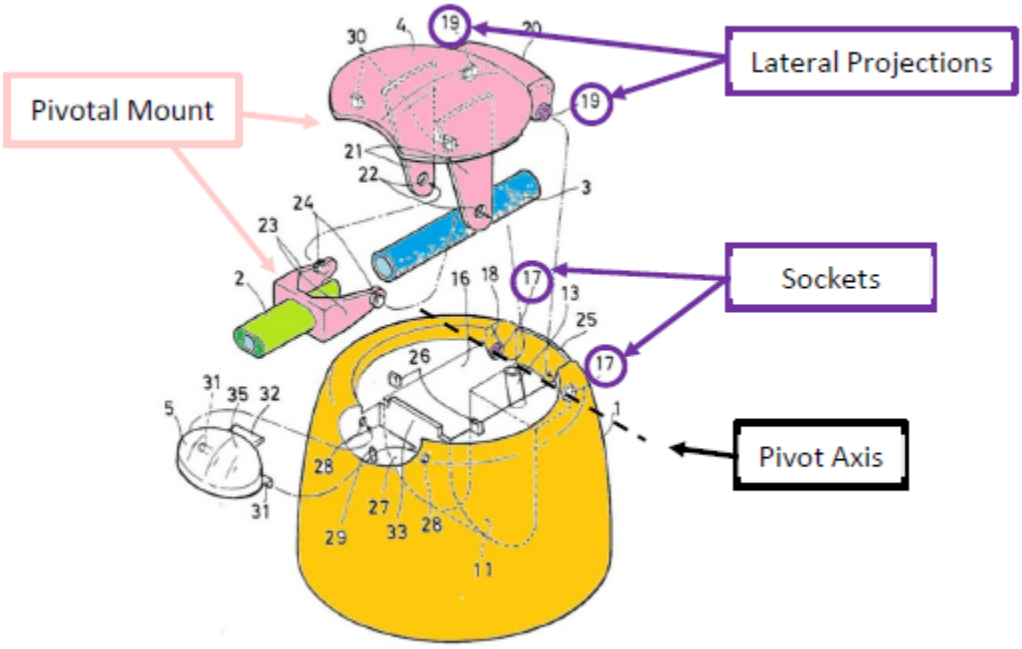

Pet. 27. Petitioner's annotated version of Nakajima's Figure 1 is an exploded view of a cap assembly depicting a two-piece pivotal mount colored pink having lateral protrusions 19 that are rotatably fitted into a corresponding pair of sockets 17 of base 1, colored yellow. Pet. 27. A dashed line indicates a pivot axis, and Petitioner states that a person of ordinary skill in the art "would have understood the hinge shafts and recesses comprise a pair of lateral projections and sockets that define an axis of rotation of the pivotal mount." Pet. 17 (citing Ex. 1003 ¶ 84).

Petitioner also contends Nakajima describes a resilient mouthpiece satisfying each claim requirement. Among other things, Petitioner contends that although Nakajima describes its mouthpiece and arms as a single component, it would have been obvious to a person of ordinary skill to form the component in two removably coupled parts, a mouthpiece and "a bracket potion with arms 23 configured to pivot when the cap assembly is opened (the 'pivotal mount')." Pet. 28. According to Petitioner, "[d]ue to its

engagement with the pivotal mount, Nakajima's mouthpiece 'moves up and down in conjunction with the opening and closing of the lid." Pet. 29.

Regarding Limitation 1[b][3][i], which recites "wherein the resilient mouthpiece is pivotal about an axis defined by the pair of lateral projections as the pair of lateral projections rotate within the pair of sockets," Petitioner states that Nakajima's pivotal mount pivots about the axis defined by the lateral projections, citing the annotated version of Figure 1, reproduced above. Pet. 33. Petitioner additionally cites annotated versions of Nakajima's Figures 2 and 3, reproduced below.

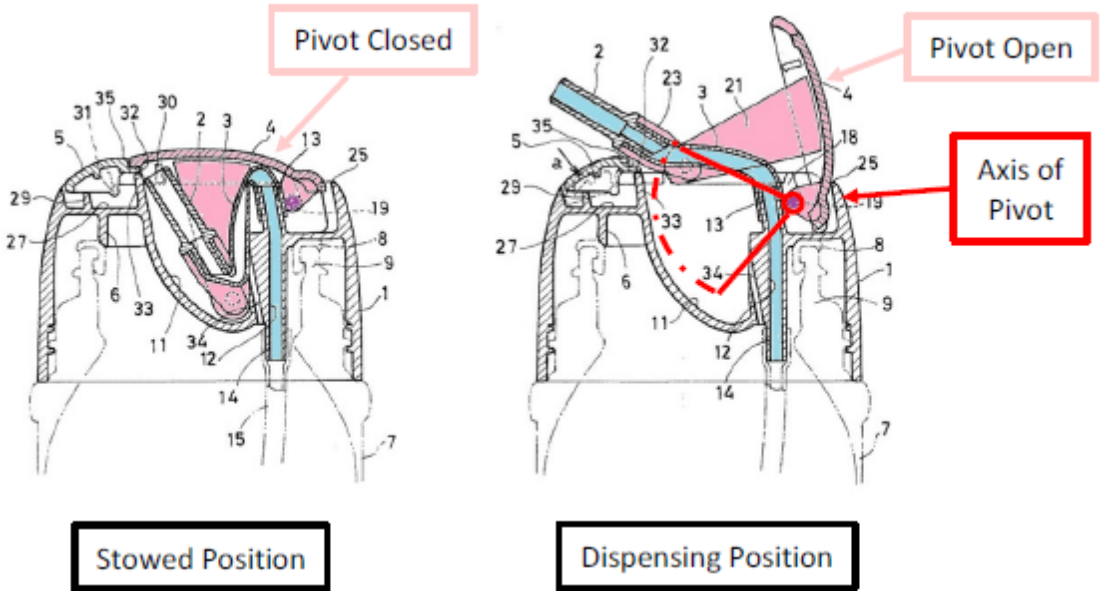

Pet. 34. Petitioner's annotated versions of Figures 2 and 3 depict Nakajima's cap assembly in a "Pivot Closed"/"Stowed Position," and a "Pivot Open"/"Dispensing Position." Petitioner additionally labels lateral protrusions 19 as "Axis of Pivot." According to Petitioner, "[b]ecause the mouthpiece is coupled to the lid, it 'moves up and down in conjunction with the opening and closing of the lid.' Thus, Nakajima's mouthpiece pivots about the axis defined by the lateral projections." Pet. 35 (citing Ex. 1003 ¶ 103).

b. Patent Owner's Arguments

Patent Owner contends Petitioner fails to show that Nakajima satisfies Limitation 1[b][3][i]. First, Patent Owner argues Nakajima's "*mouthpiece* does not pivot with the alleged *pivotal mount*." Prelim. Resp. 43. Further, Patent Owner argues "if Nakajima's mouthpiece can be described as 'pivotal,' it is not pivotal about the axis mapped to the recited 'axis defined by the pair of lateral projections as the pair of lateral projections rotate within the pair of sockets.'" Prelim. Resp. 43. According to Patent Owner, "Nakajima's lid 4 (the alleged *pivotal mount*) pivots in a clockwise direction about the axis defined by the hinge shafts 19 (the alleged *axis*) when it opens, but the alleged *resilient mouthpiece* does not pivot with the alleged *pivotal mount* about the axis." Prelim. Resp. 44. Further, Petitioner argues that "[i]nstead, the *mouthpiece* moves up, and then forward, and any pivoting by the mouthpiece is about a different axis entirely—defined by the protrusions 24, *not* the hinge shafts 19. Moreover, that pivoting is not *with the pivotal mount* because it is in a counter-clockwise direction—the opposite direction from the lid's (*i.e.*, *the pivotal mount's*) pivotal movement." Prelim. Resp. 44–45.

Reproduced below are Patent Owner's versions of Nakajima's Figures 2 and 3, annotated to illustrate Patent Owner's arguments.

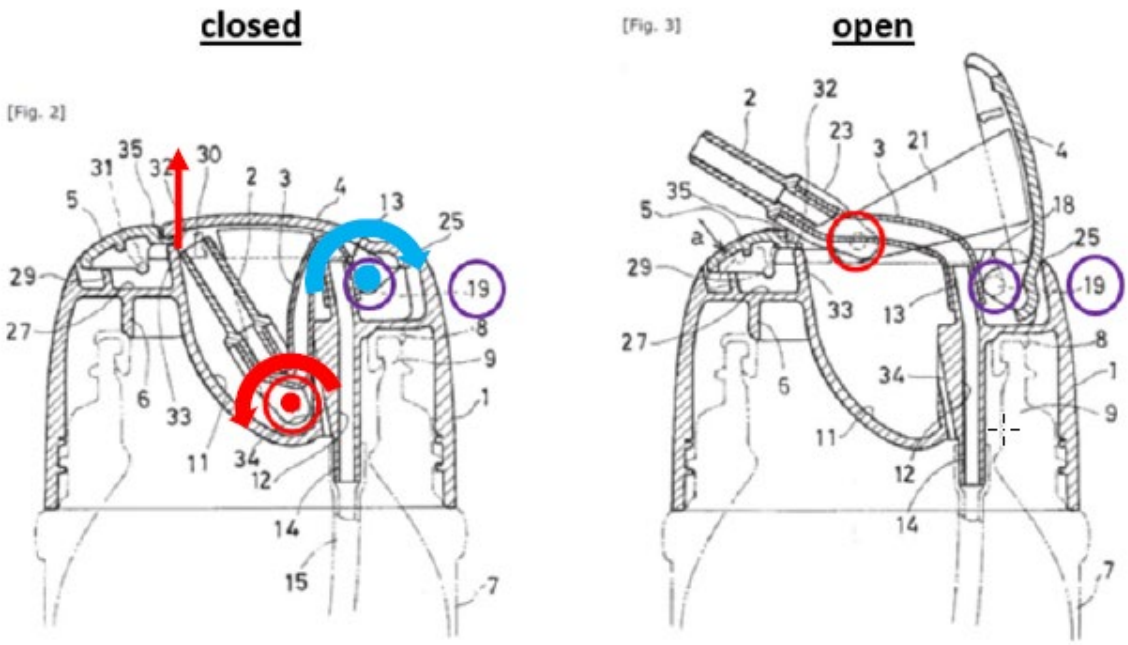

Prelim. Resp. 45. Patent Owner's annotated versions of Figures 2 and 3 include a red arrow around protrusions 24 indicating counterclockwise rotation and a blue arrow around hinge shafts 19 indicating clockwise rotation. Patent Owner's annotations also include a red arrow pointing upward, and Patent Owner argues "Najakima's up-and-down movement is not 'pivotal movement about' the axis defined by the lateral projections, as claimed." Prelim. Resp. 46. Finally, Patent Owner argues "Nakajima parallels the Reexamination Specialists' mapping of McDonough during reexamination [where] the patentee distinguished up-and-down movement from the pivotal movement required by the claims." Prelim. Resp. 46 (citing Ex. 1012, 16–16, 30–35; Ex. 2001, 845–846). Reproduced below are Figures 2 and 3 of McDonough,[9] as cited in the Preliminary Response.

[9] US 2005/0029271 A1; published Feb. 10, 2005. Ex. 2008.

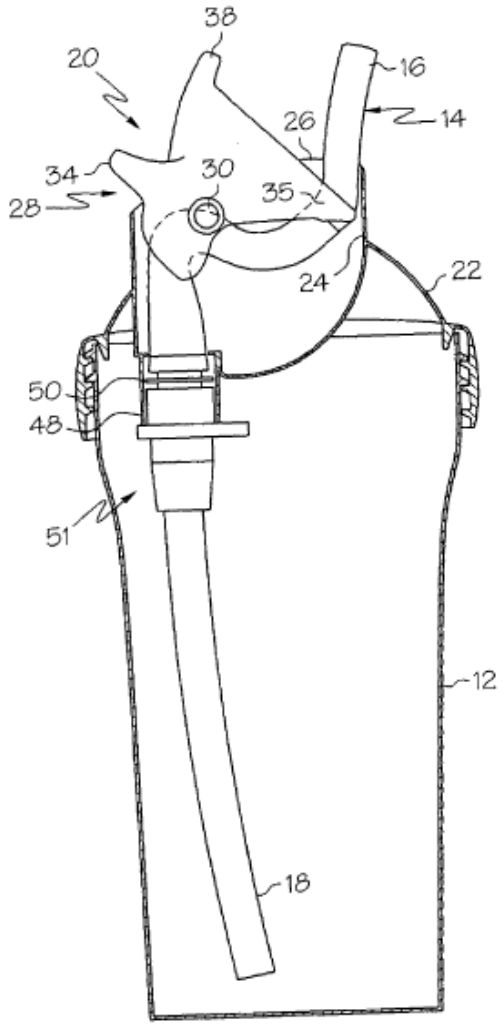

FIG. 2

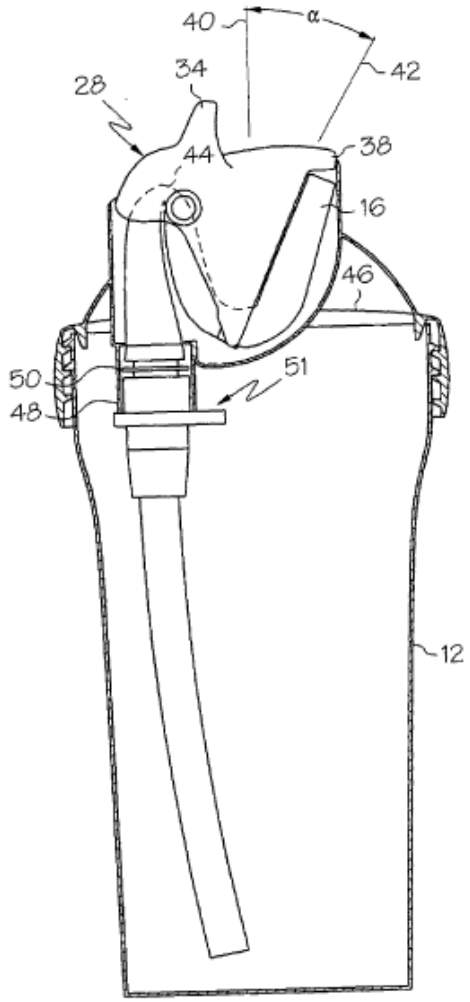

FIG. 3

Prelim. Resp. 47. Figures 2 and 3 of McDonough are cross-section depictions of a drinking container 12 having lid 22, flexible straw 14, straw positioning mechanism 20, and drinking end 16. Ex. 2008 ¶¶ 21–23.

c. Discussion

At this stage, we preliminarily determine Petitioner has shown that Nakajima teaches or reasonably suggests each element of claim 1, but we encourage the parties to develop the record regarding the meaning of

"pivotal about an axis" as recited in Limitation 1[b][3][i] during the trial phase. As cited by Petitioner, from the closed position, for example, the Nakajima's mouthpiece would appear to move based on clockwise rotation about hinge shaft 19. Pet. 35. Patent Owner appears correct that at some point in the opening (or closing) process, Nakajima's mouthpiece additionally moves based on rotation about protrusions 25. Prelim. Resp. 44–45. At this stage, we preliminarily determine that such additional rotation is not foreclosed by the plain language of the claims.

We note that Nakajima bears at least some similarities to McDonough, which the Patentee distinguished during the re-examination of the '255 patent. Notably, though, the Patentee presented multiple arguments to distinguish McDonough, arguing for example that McDonough's drinking end (mouthpiece) 16 is not coupled to straw positioning mechanism (pivotal mount) 20 (Ex. 2001, 635–636) and separately arguing that "portion 16 of the straw in McDonough (mapped to the resilient mouthpiece) is not <u>pivotal about an axis defined by the pair of lateral projections</u> as the pair of lateral projections rotate within the pair of sockets, as required by the claims" (Ex. 2001, 638). *See also* Ex. 2001, 639–641. It is not clear on the current record if or how this prosecution history and any other relevant intrinsic evidence impacts the scope of claim 1, and the parties are encouraged to brief this issue during the trial phase.

d. Conclusion

Having reviewed the evidence currently of record, for the reasons explained above, we determine Petitioner has shown a reasonably likelihood that it would prevail in showing that claim 1 is unpatentable in view of Nakajima. Accordingly, we institute *inter partes* review of all challenged claims based on each ground asserted in the Petition.

2. Ribarits-based Grounds

Petitioner presents claim-by-claim, limitation-by-limitation comparisons of claims 1, 9, 11, 13, and 17–19 to Ribartis (Pet. 65–83) and of claims 2–7 and 20–23 to the combination of Ribartis, Panicci, and Hughes, including reasons for combining the references' teachings (Pet. 83–99). Patent Owner argues, and we preliminarily agree, that Petitioner does not "show that the alleged *mouthpiece* in Ribartis is 'adapted to resiliently compress responsive to compressive forces applied to the resilient mouthpiece by a user's teeth,'" as required by each challenged claim. Prelim. Resp. 51.

Petitioner's relevant contentions regarding Ribartis's mouthpiece are depicted in the annotated versions of Ribartis's Figure 1, reproduced below.

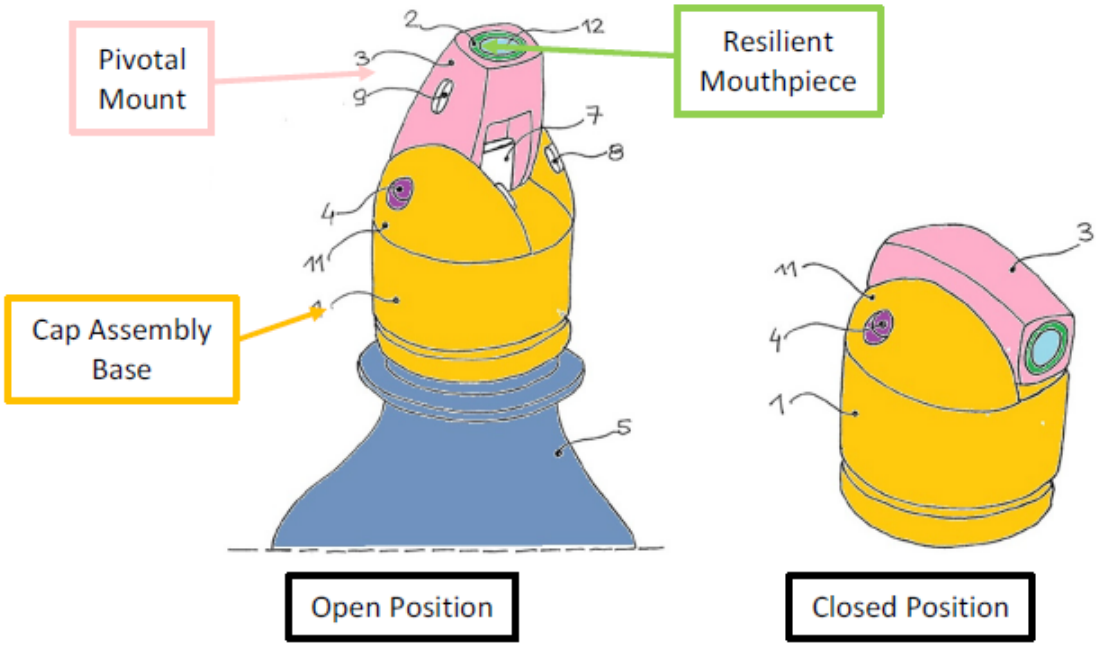

Pet. 65. Petitioner's annotated version of Figure 1 depicts what Petitioner contends to be the cap assembly base (colored yellow), the pivotal mount (colored pink), and the resilient mouthpiece (colored green). Petitioner states that Ribartis's mouthpiece is the end portion of a tubular element

made of rubber or latex (Pet. 71–72), but Ribartis's mouthpiece is surrounded by the pivotal mount. Even accepting that a person of ordinary skill would have understood that rubber and latex are resilient materials, Petitioner does not adequately explain how Ribartis's mouthpiece "is adapted to resiliently compress responsive to compressive forces, such as the compressive forces applied by a user's teeth," considering that Ribartis's mouthpiece is surrounded by the pivotal mount. At this stage, we decline to construe "adapted to" because we preliminarily determine that Petitioner has not shown that Ribartis satisfies the plain language of the claims.

III. CONCLUSION

For the above reasons, we determine that Trove demonstrates a reasonable likelihood that it would prevail in showing that at least one of the Challenged Claims is unpatentable. Accordingly, we institute on all the challenges as raised in the petition. *See* 37 C.F.R. § 42.108(a), (c); *PGS Geophysical AS v. Iancu*, 891 F.3d 1354, 1360 (Fed. Cir. 2018) (citing *SAS Inst., Inc. v. Iancu*, 138 S. Ct. 1348, 1359–60 (2018)).

IV. ORDER

Accordingly, it is:

ORDERED that an *inter partes* review of claims 1–7 and 9–23 of the '255 patent is *instituted*; and

FURTHER ORDERED that, pursuant to 35 U.S.C. § 314(c) and 37 C.F.R. § 42.4(b), notice is hereby given of the institution of trial, which will commence on the entry date of this Decision.

FOR PETITIONER:

Ali S. Razai
Joseph F. Jennings
Cheryl T. Burgess
Jared Bunker
KNOBBE, MARTENS, OLSON & BEAR, LLP
2azr@knobbe.com
2jfj@knobbe.com
2ctb@knobbe.com
2jcb@knobbe.com

FOR PATENT OWNER:

Ryan Schletzbaum
Jason Mudd
SHOOK HARDY & BACON LLP
rschletzbaum@shb.com
jmudd@shb.com