Trials@uspto.gov
571-272-7822

Paper 34
Date: January 15, 2026

UNITED STATES PATENT AND TRADEMARK OFFICE

BEFORE THE PATENT TRIAL AND APPEAL BOARD

TROVE BRANDS, LLC,
Petitioner,

v.

CAMELBAK PRODUCTS, LLC,
Patent Owner.

IPR2024-01137
Patent 10,676,255 C1

Before LINDA E. HORNER, HYUN J. JUNG, and CARL M. DEFRANCO, *Administrative Patent Judges*.

DEFRANCO, *Administrative Patent Judge*.

JUDGMENT
Final Written Decision
Determining No Challenged Claims Unpatentable
35 U.S.C. § 318(a)

CamelBak Products, LLC ("CamelBak") is the owner of U.S. Patent No. 10,676,255 C1 (Exs. 1001 (original patent), 1002 (reexamination certificate), collectively, "the '255 patent"). Trove Brands, LLC ("Trove") filed a Petition for *inter partes* review of claims 1–7 and 9–23 of the '255 patent. *See* Paper 2 ("Pet."). We instituted *inter partes* review of all claims as challenged in the petition. Paper 9 ("Inst. Dec.). In due course, CamelBak filed a patent owner response. Paper 19 ("PO Resp."). Trove followed with a reply. Paper 22 ("Pet. Reply"). And CamelBak filed a sur-reply. Paper 23 ("PO Sur-Reply"). We held an oral hearing, a transcript of which is in the record. Paper 33 ("Hrg. Tr.").

We have jurisdiction under 35 U.S.C. § 6. This Final Written Decision is entered pursuant to 35 U.S.C. § 318(a) and 37 C.F.R. § 42.73. For the reasons below, we determine that Trove fails to demonstrate that claims 1–7 and 9–23 of the '255 patent are unpatentable.

I. BACKGROUND

A. Related Matters

The '255 patent is the subject of a parallel district court action: *Trove Brands, LLC d/b/a The Blender Bottle Company v. CamelBak Products, LLC*, No. 5:23-cv-04267 (N.D. Cal. Aug. 21, 2023). *See* Pet. 1; Paper 3, 2. That case is currently stayed pending final outcome of this *inter partes* review.

The '255 patent was also the subject of an *ex parte* reexamination proceeding before the Office, namely, Reexamination Request No. 90/015,192 (filed Jan. 18, 2023). *See* Pet. 13–14. The reexamination resulted in issuance of an *Ex Parte* Reexamination Certificate (Ex. 1002),

which amended independent claim 1 and added claims 20–23, of which claim 20 is independent.

B. Real Parties-in-Interest

Trove identifies itself as the real party-in-interest. Pet. 1. CamelBak identifies itself and Vista Outdoor Inc. as real parties-in-interest. Paper 3, 2.

C. Overview of the '255 Patent

The '255 patent "relates generally to drink bottles, and more particularly to drink bottles with bite-actuated mouthpieces." Ex. 1001, 1:30–32. Annotated Figures 1 and 2 of the '255 patent, reproduced below, are perspective views of a bite-actuated drink bottle according to the present invention. *Id.* at 1:54–57.

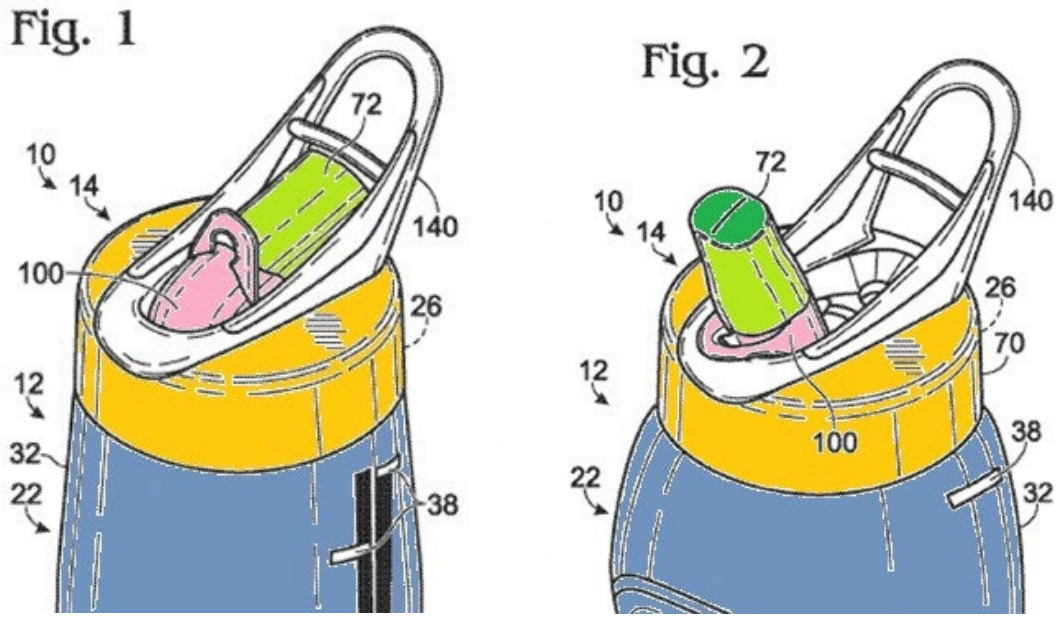

As shown, the drink bottle includes fluid container 12 (blue) provided with cap assembly 14 that includes resilient, bite-actuated mouthpiece 72 (green) and pivotal mount 100 (pink) to which the mouthpiece is attached for pivotal movement between a stowed position (Figure 1) and a dispensing position (Figure 2). *Id.* at 2:65–67, 3:17–28. In the dispensing position, "the mouthpiece is oriented in a suitable position from which a user may draw

drink fluid from the drink bottle through mouthpiece 72 *when the user bites upon the mouthpiece*." *Id.* at 3:21–25 (emphasis added).

More specifically, annotated Figure 25 of the '255 patent, reproduced below, illustrates a "pivotal mounting mechanism" for mouthpiece 72 and pivotal mount 100 to which the mouthpiece is attached. *Id.* at 16:57–58.

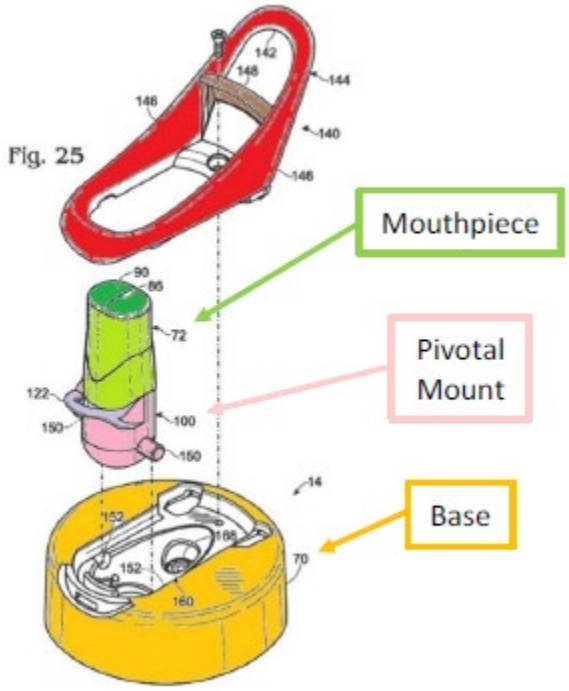

Annotated Figure 25 is an exploded isometric view of the cap assembly. *Id.* at 2:47–48. As shown, pivotal mount 100 (pink) includes a pair of lateral projections 150 that are received into a pair of corresponding sockets 152 defined by portions of base 70 (yellow) and handle 140 (red) of the cap assembly. *Id.* at 16:59–61. Notably, the pair of lateral projections "are *rotatable* within the sockets, and thereby function as *rotatable* supports, or axles," about which the pivotal mount and attached mouthpiece "may be pivotally moved relative to the base of the cap assembly." *Id.* at 16:61–65 (emphases added).

D. Challenged Claims

Of the challenged claims, claims 1 and 20 are independent. Claim 1, as amended during reexamination of the ’255 patent, is illustrative of the claimed subject matter and reproduced below (with emphasis added for limitations in dispute and paragraph numbering added for clarity[1]). The parties agree that independent claim 20, newly added during reexamination, is identical to claim 1, except for an additional limitation related to a “dust cover.” *See* Pet. 16; Paper 6, at 7.

> 1. A drink container comprising:
>
> [1.a] a fluid container having a neck with an opening and having an internal compartment sized to hold a volume of potable drink fluid;
>
> [1.b] a cap assembly removably coupled to the fluid container to cover the opening, wherein the cap assembly defines a fluid conduit for drink fluid to flow from the fluid container and through the cap assembly to a user, wherein the fluid conduit includes an inlet through which drink fluid from the fluid container may enter the fluid conduit, and a dispensing outlet through which drink fluid in the fluid conduit may be dispensed from the cap assembly to a user, and further wherein the cap assembly comprises:
>
> > [1.b.1] a cap assembly base removably coupled to the neck of the fluid container, wherein the cap assembly base is configured to be selectively and repeatedly decoupled from and re-coupled to the neck of the fluid container;
> >
> > [1.b.2] a pivotal mount coupled to the cap assembly base for pivotal movement relative to the cap assembly base, the pivotal mount comprising a mount outlet, wherein the pivotal mount includes a pair of lateral projections, wherein the cap assembly base defines a pair of sockets into which the pair of lateral projections extend;

[1] The paragraph numbering tracks the numbering as assigned to the claim limitations in the petition. *See* Pet. 14–15.

[1.b.3] a resilient mouthpiece engaged with the mount outlet and removably coupled to the pivotal mount for pivotal movement with the pivotal mount relative to the cap assembly base, ***[1.b.3.i] wherein the resilient mouthpiece is pivotal about an axis defined by the pair of lateral projections as the pair of lateral projections rotate within the pair of sockets*;**

[1.b.3.ii] wherein the resilient mouthpiece defines a portion of the fluid conduit, including the dispensing outlet;

[1.b.3.iii] wherein the resilient mouthpiece and the pivotal mount are configured to be selectively pivoted between a stowed position and a dispensing position, and further in the dispensing position, the dispensing outlet is positioned further away from the cap assembly base than when the resilient mouthpiece and the pivotal mount are in the stowed position;

[1.b.3.iv] wherein the resilient mouthpiece is adapted to resiliently compress responsive to compressive forces applied to the resilient mouthpiece by a user's teeth; and

[1.b.4] a manual on/off valve having a closed configuration, in which the manual on/off valve obstructs the fluid conduit to restrict drink fluid from flowing between the inlet and the dispensing outlet, and an open configuration, in which the manual on/off valve permits drink fluid to flow through the fluid conduit from the inlet to the dispensing outlet; [1.b.4.i] wherein the manual on/off valve includes a flexible tube that defines a portion of the fluid conduit;

[1.b.4.ii] wherein when the manual on/off valve is in the closed configuration, the tube is crimped to obstruct the flow of drink fluid through the fluid conduit; and

[1.b.4.iii] wherein when the manual on/off valve is in the open configuration, the tube is not crimped and does not obstruct the flow of drink fluid through the fluid conduit.

Ex. 1002, 1:22–2:16.

E. Asserted Challenges

Claims Challenged	35 U.S.C. §	Basis
1, 3–5, 9–11, 13, 18, 19	103	Nakajima[2]
12, 14–16	103	Nakajima, Gardner[3]
1, 9, 11, 13, 17–19	103	Ribarits[4]
2–7, 20–23	103	Ribarits, Panicci,[5] Hughes[6]

In further support of these challenges, Trove relies on the declaration testimony of Glenn E. Vallee, Ph.D. *See* Ex. 1003. CamelBak, in turn, relies on the declaration testimony of Michael Jobin. *See* Ex. 2016. The parties also submit cross-examination testimony from each of these expert witnesses. *See* Ex. 1018 (cross of Mr. Jobin); Ex. 2025 (cross of Dr. Vallee).

II. ANALYSIS

A. Level of Ordinary Skill in the Art

Trove contends that a person of ordinary skill in the art "would have had an undergraduate degree in mechanical engineering or equivalent coursework, and a year or more of experience in designing, prototyping, and/or manufacturing fluid containers or similar products" and that "[m]ore work experience may substitute for a lower level of education, and vice versa." Pet. 18 (citing Ex. 1003 ¶ 26). While CamelBak offers a "slightly different" level of skill in the art, it nonetheless "discerns no material difference between the definitions provided by the parties for purposes of the

[2] JP 2002-211613, published July 31, 2002 (Ex. 1004, "Nakajima").
[3] US 6,070,767, issued June 6, 2000 (Ex. 1005, "Gardner").
[4] WO 2004/063042, published July 29, 2004 (Ex. 1006, "Ribarits").
[5] US 4,485,963, issued Dec. 4, 1984 (Ex. 1007, "Panicci").
[6] US 6,523,711 B1, issued Feb. 25, 2003 (Ex. 1010, "Hughes").

Board's decision on the patentability of the '255 patent." PO Resp. 14–15. That being the case, we adopt Trove's proposed definition of the level of skill in the art, as it is reasonable and consistent with what is reflected in the asserted prior art and the specification of the '255 patent.

B. Claim Construction

In its petition, Trove states that "no claim terms require construction to resolve the invalidity challenges here." Pet. 19 (citing *Nidec Motor Corp. v. Zhongshan Broad Ocean Motor Co. Ltd.*, 868 F.3d 1013, 1017 (Fed. Cir. 2017)). CamelBak, in contrast, proposes constructions for several claim limitations, namely, those reciting that:

> (1) the resilient mouthpiece is "coupled to the pivotal mount for pivotal movement with the pivotal mount";
>
> (2) the resilient mouthpiece is "pivotal about an axis defined by the pair of lateral projections as the pair of lateral projections rotate within the pair of sockets"; and
>
> (3) the resilient mouthpiece is "adapted to resiliently compress responsive to compressive forces applied to the resilient mouthpiece by a user's teeth."

PO Resp. 15–44. We need only construe the second and third of those claim limitations, as their construction is dispositive.

1. "wherein the resilient mouthpiece is pivotal about an axis defined by the pair of lateral projections as the pair of lateral projections rotate within the pair of sockets"

Both independent claims 1 and 20 recite "wherein the resilient mouthpiece is pivotal about an axis defined by the pair of lateral projections as the pair of lateral projections rotate within the pair of sockets." Ex. 1002, 1:51–54 (limitation [1.b.3.i]), 2:44–47. Although we determined at the institution stage that Trove demonstrated a reasonable likelihood that Nakajima discloses or otherwise suggests this limitation, we encouraged the

parties to further develop the record regarding the meaning of this limitation at the trial phase. *See* Inst. Dec. 14–15; *see also id.* at 15 (again encouraging the parties to address how any relevant intrinsic evidence, including the prosecution history, might impact our construction of this limitation).

With that in mind, CamelBak argues that this limitation should be construed to mean that the resilient mouthpiece "moves with *rotational motion about an axis of rotation* defined by the pair of lateral projections as the pair of lateral projections rotate within the pair of sockets." PO Resp. 15 (emphasis added). In support, CamelBak explains that, "rotational motion about the axis of rotation defined by the lateral projections requires *maintaining a constant distance/radius* between the mouthpiece and the axis of rotation defined by the lateral projections" of the pivotal mount. *Id.* (citing Ex. 2016 ¶ 56) (emphasis added). According to CamelBak, "[t]his construction requiring rotational motion about an axis of rotation is confirmed by the plain claim language, specification, and file history of the '255 patent, as well as extrinsic evidence in the form of dictionary definitions and expert opinion." *Id.* at 16.

Trove, in turn, "does not dispute that the plain and ordinary meaning of 'pivotal' can *include*[] 'movement with rotational motion,'" but argues that "there is no basis for requiring that such [rotational] movement must maintain a constant distance/radius between the mouthpiece and the axis of rotation defined by the lateral projections." Pet. Reply 3. According to Trove, CamelBak's proposed construction "is a thinly veiled attempt to import limitations from specific embodiments in an effort to avoid the prior art." *Id.*

CamelBak has the better position, as confirmed by both the intrinsic and extrinsic evidence of record.

a. Plain Language

At the outset, we note that the claims recite that the mouthpiece "is pivotal about an axis defined by the pair of lateral projections as [they] *rotate* within the pair of sockets." Ex. 1002, 1:51–54, 2:44–48 (emphasis added). So, by explicitly using the word "rotate" in conjunction with the mouthpiece's pivotal movement, the plain language of the claims informs us that "pivotal about an axis" means rotational motion. Indeed, Trove's own expert confirmed as much on cross-examination.

> Q [by CamelBak's counsel] So when the claims used the term pivotal about an axis, do you understand that to mean rotational about an axis of rotation?
>
> A [by Trove's expert] I think that's correct. It pivots about an axis. Again, about an axis, at least one.
>
> * * *
>
> Q So would you agree that the lateral projections define an axis of rotation as the lateral projections rotate within the pair of sockets?
>
> A Yes. It is an axis of rotation.
>
> Q And the mouthpiece is pivotal about this axis of rotation, correct?
>
> A Yeah. Again, it says it's pivotal about an axis of rotation. . . .
>
> Q And specifically it's the axis of rotation we just established in the prior question which is the axis of rotation defined by the pair of lateral projections, correct?
>
> A Correct. So one of those axes has to be the axis defined by the pair of lateral projection.

Ex. 2025, 56:19–57:1,[7] 59:3–20; *see also id.* at 38:1–39:2 (confirming that the '255 patent's reference to "pivotal movement" is "referring to rotational

[7] As do the parties, we reference the pagination of the transcript itself, rather than the pagination of the exhibit.

movement"); 104:5–21 ("Q So would you agree that a pivot axis is synonymous with an axis of rotation? A Yes.")

Indisputably, then, the claimed pivotal axis defined by the pair of lateral projections is an *axis of rotation*, and the claimed pivotal movement about that axis is *rotational motion*. That being the case, the only issue left to decide is whether such rotational motion, as claimed, requires maintaining a constant distance or radius relative to the axis of rotation defined by the pivotal mount's lateral projections, as CamelBak advocates. We find that both the specification and prosecution history of the '255 patent support such a construction.

b. Specification and Drawings

In describing the ability to adjust the "rotational orientation" of mouthpiece (Ex. 1001, 7:54–60), the specification explains that the lateral projections on the pivotal mount are "rotatable within the sockets, and thereby function as rotatable supports, or axles, upon which the mount and any attached mouthpiece may be pivotally moved relative to the base of the cap assembly, such as between stowed and dispensing configurations" (*id.* at 16:57–66). Annotated Figures 1 and 2 of the '255 patent, reproduced below, illustrate the rotational motion of the pivotal mount and attached mouthpiece, while annotated Figure 25 of the '255 patent, also reproduced below, depicts the mechanism for achieving that rotational motion.

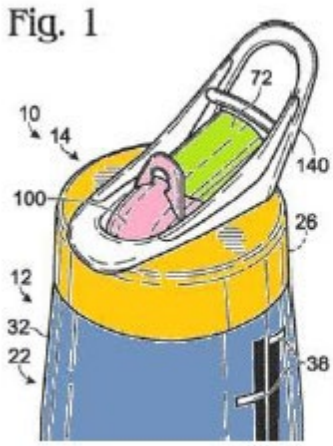

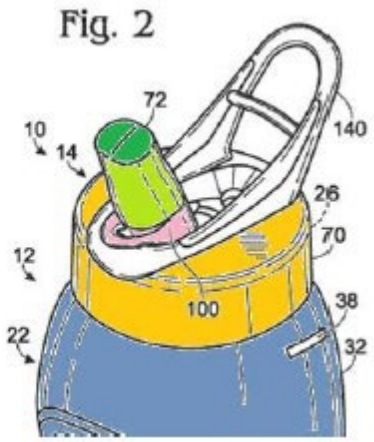

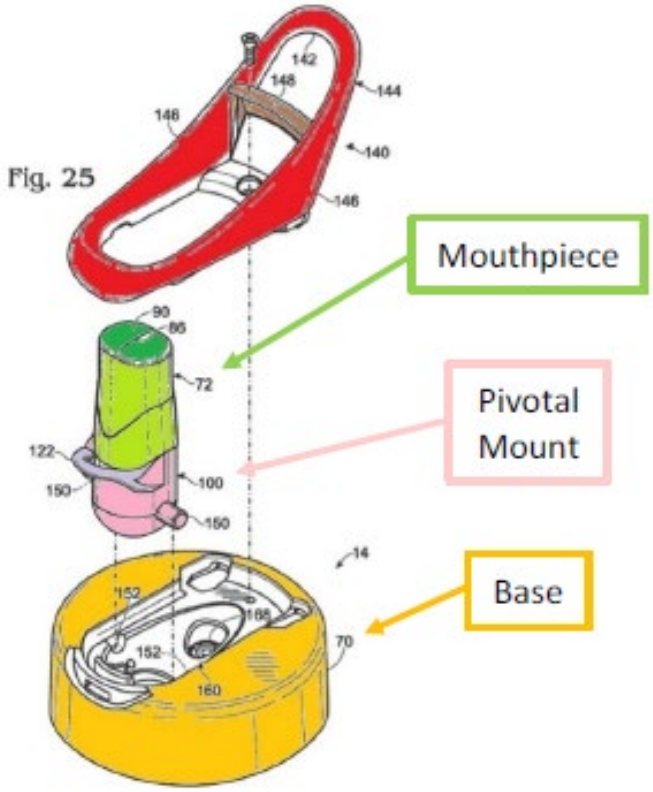

As shown above in Figures 1 and 2, pivotal mount 100 (pink) and attached mouthpiece 72 (green) rotate between a stowed position (Fig. 1) and a dispensing position (Fig. 2) relative to base 70 (yellow). And, as shown in Figure 25, lateral projections 150 on the pivotal mount are received within sockets 152 on the base for rotational motion about the axis defined by the lateral projections rotating within the sockets. Notably, both lateral

projections 150 and corresponding sockets 152 have a cylindrical shape, meaning the pivotal mount and mouthpiece inevitably would rotate along a circular path of fixed radius.

Elsewhere, the specification similarly describes the mouthpiece's rotation along a distinctly circular path. Specifically, as CamelBak correctly notes, "in every embodiment of the '255 patent, the *pivotal mount* and the *resilient mouthpiece* pivot together in a circular path (i.e., with constant radius) about the axis of rotation defined by the lateral projections." PO Resp. 20–21 (citing Ex. 1001, 7:54–60, 7:25–33, 9:19–26, Figs. 1, 2, 6, 7, 21–29; Ex. 2016 ¶ 64). In support, CamelBak submits Figures 6 and 7 of the '255 patent, reproduced below. *Id.* at 21.

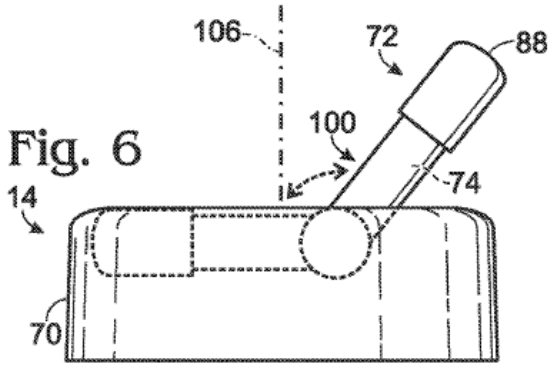

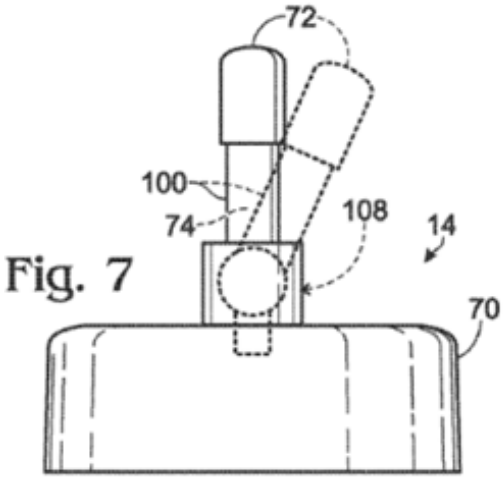

Figure 6, above left, depicts an embodiment where mouthpiece 72 and pivotal mount 100 rotate about an axis of rotation defined by a *circular* joint (dashed circle) within base 70 of the cap assembly. *See* Ex. 1001, 7:21–48. Similarly, Figure 7, above right, depicts another embodiment where mouthpiece 72 and pivotal mount 100 rotate about an axis of rotation defined by a *circular* joint above base 70 of the cap assembly. *See id.* at 7:49–60.

Based on those multiple disclosures and figures, we agree with CamelBak that the specification appears to describes the mouthpiece's rotational motion about the pivotal axis solely in the context of a circular path of fixed radius. Thus, taken together, the specification and drawings of the '255 patent support that rotational motion in the context of claims 1 and 20 means that the mouthpiece maintains a circular path of constant radius throughout its rotation about the pivotal axis defined by the lateral projections.

c. Reexamination History

Although not dispositive in and of itself, the reexamination history of the '255 patent further informs the proper construction of this limitation. During reexamination, the Examiner rejected claim 1 based on McDonough.[8] *See* Ex. 2001, 587–592. To overcome this rejection, CamelBak distinguished the up-and-down translational motion of McDonough's mouthpiece from the rotational motion of the mouthpiece required by the claims. *See id.* at 637–639.

More specifically, CamelBak annotated Figure 7 of the '255 patent, as reproduced below, to overlay a circular path of constant radius on the figure to explain how the claimed mouthpiece is "pivotal about an axis defined by the pair of lateral projections as [they] rotate within the pair of sockets." *See id.* at 637.

[8] US 2005/0029271 A1, published Feb. 10, 2005 (Ex. 2008, "McDonough").

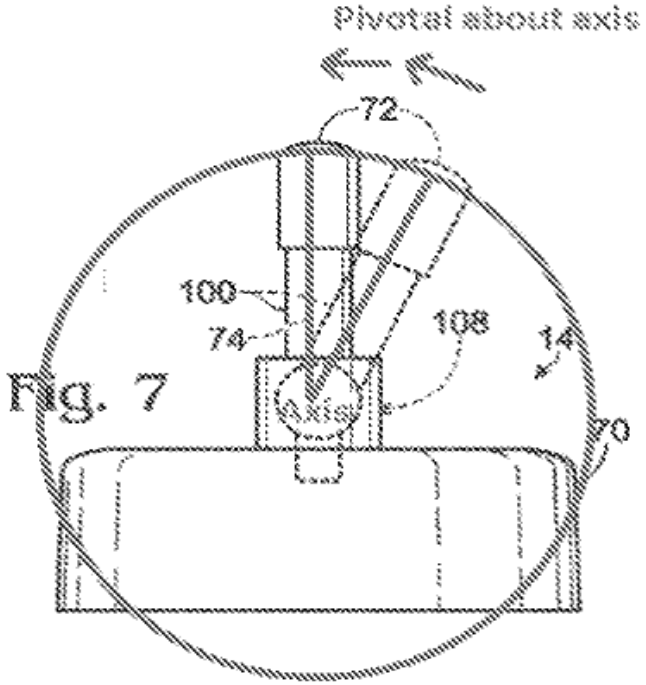

As shown above, CamelBak labeled joint 108 as the "Axis" and drew a circle around the "Axis," as well as two lines of equal length between the "Axis" and the circle's edge, to indicate that rotational motion of mouthpiece 72 follows a distinctly circular path of constant radius. In doing so, CamelBak explained: "As shown above, the *mouthpiece* 72 is *pivotal about an axis* defined by the pair of lateral projections as they rotate." *Id*. (emphasis in original).

After indicating that rotational motion of the claimed mouthpiece requires following a circular path of constant radius, CamelBak then distinguished the movement of McDonough's mouthpiece by annotating Figures 2 and 3 of McDonough, as reproduced below. *Id.* at 638.

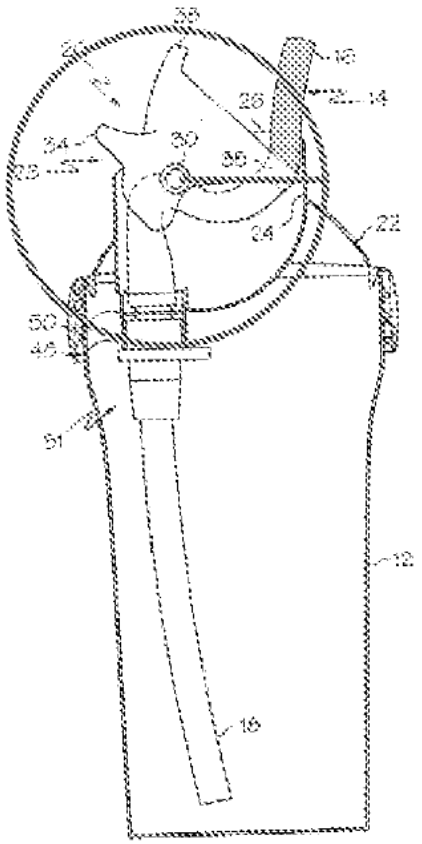

FIG. 2

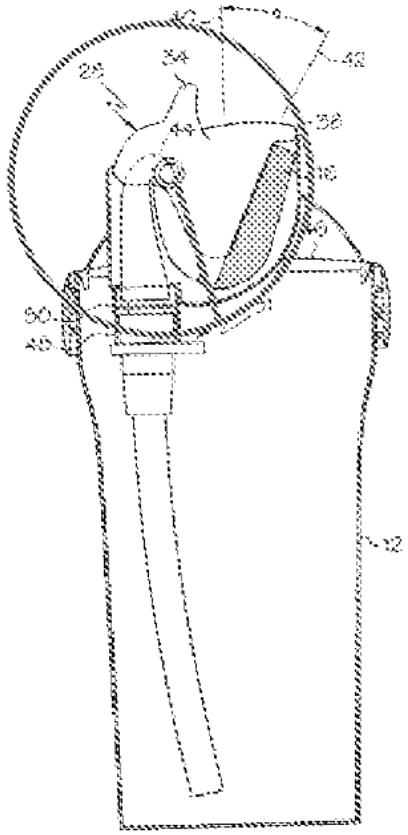

FIG. 3

As shown above, CamelBak overlaid a circle around McDonough's positioning member 20 (mapped to the claimed "pivotal mount") to show how its rotation about axis 30 results in the straw's drinking end 16 (mapped to the claimed "mouthpiece") following an up-and-down path rather than a circular path. *See id.* The absence of a circular path is shown by the fact that the mouthpiece moves downward from a position outside the circle's radius (Fig. 2) to a position inside the circle's radius (Fig. 3). Indeed, Camelback argued that, because "the end portion 16 of the straw is pulled downwards," McDonough's mouthpiece "is not '*pivotal about an axis defined by the pair of lateral projections*' as required by the claims." *Id.* at 638–39 (emphasis in original).

Annotated Figures 2 and 3 from the original version of McDonough, reproduced below, more clearly illustrate CamelBak's argument during reexamination to distinguish McDonough's movement from that of the claimed invention. *See* Ex. 2008, Figs. 2, 3 (red annotations added).

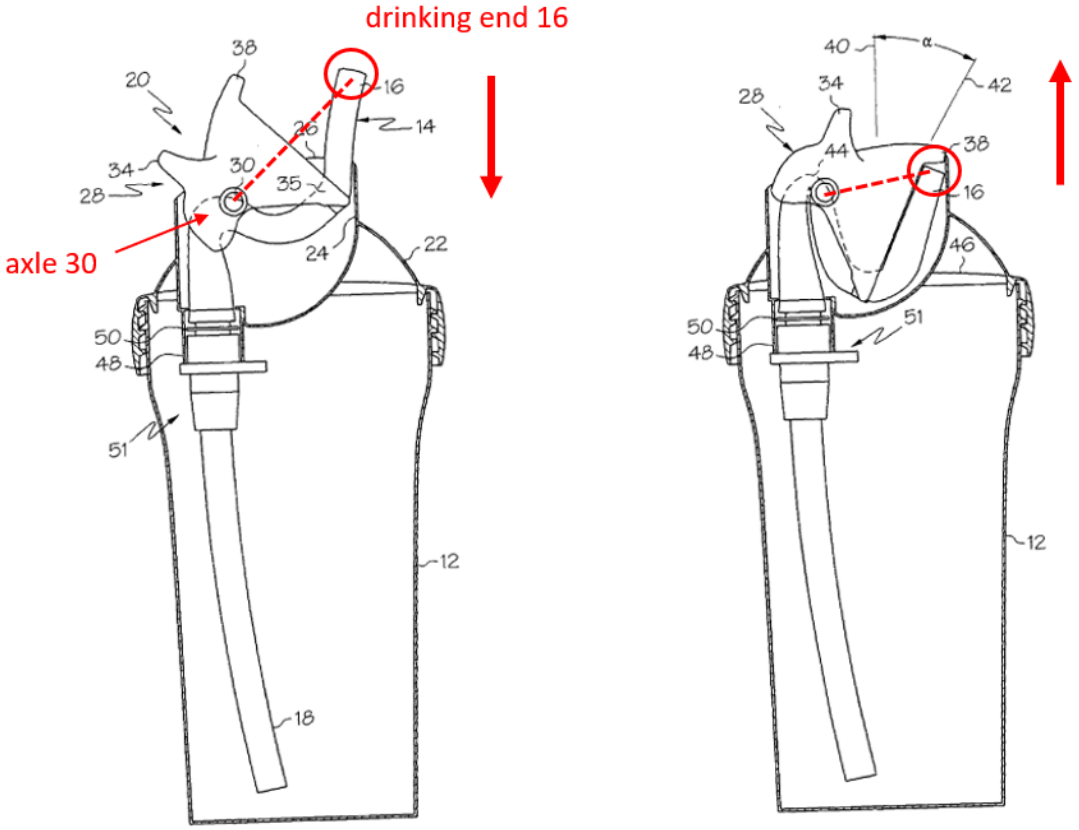

FIG. 2 FIG. 3

As shown above, McDonough's mouthpiece—drinking end 16—does not move in a circular path that maintains a constant radius about the axis of rotation defined by McDonough's axle 30, but instead engages in up-and-down translational motion (red arrows) relative to axle 30. Thus, we understand CamelBak's arguments during reexamination to have distinguished the purely rotational (i.e., circular) motion of the claimed mouthpiece from a mouthpiece that moves with a translational component relative to the pivotal axis.

In sum, this reexamination history shows that, by distinguishing over the translational motion of McDonough's mouthpiece, CamelBak limited the claimed mouthpiece to one that (1) maintains a circular path of constant radius about the pivotal mount's axis of rotation, and (2) does not include a path that has a translational component relative to the pivotal axis. *See Fenner Investments, Ltd. v. Cellco Partnership*, 778 F.3d 1320, 1323 & 1325 (Fed. Cir. 2015) ("Any explanation, elaboration, or qualification presented by the inventor during patent examination is relevant, for the role of claim construction is to capture the scope of the actual invention that is disclosed, described, and patented.") (internal quotation marks omitted); *CVI/Beta Ventures, Inc. v. Tura LP*, 112 F.3d 1146, 1158 (Fed. Cir. 1997) ("[T]hrough statements made during prosecution *or reexamination* an applicant for a patent or a patent owner, as the case may be, may commit to a particular meaning for a patent term, which meaning is then binding in litigation.") (emphasis added); *see also Univ. of Massachusetts v. L'Oreal S.A.*, 36 F.4th 1374, 1379 (Fed. Cir. 2022) ("The prosecution history, in particular, may be critical in interpreting disputed claim terms, and even where prosecution history statements do not rise to the level of unmistakable disavowal, they do inform the claim construction.") (internal quotations omitted).

d. Technical Definition of "Rotational Motion"

The extrinsic evidence also supports construing the rotational motion of claims 1 and 20 as limited to a circular path of constant radius about the pivotal axis. As mentioned above, the claims indisputably require that the mouthpiece engage in *rotational motion* about the pivotal axis defined by the pivotal mount's lateral projections. As such, CamelBak submits expert testimony that one of ordinary skill in the art "would have understood that

rotational motion is a type of motion in which all points of a rigid body maintain a constant distance from an imaginary axis (i.e. an axis of rotation) and rotate in circular paths about a common axis . . . ." PO Resp. 32–33 (citing Ex. 2016 ¶ 73). In support of that testimony, CamelBak's expert cites common technical treatises explaining that: (1) rotation of a rigid body about an "axis of rotation" requires that "every point of the body moves in a circle whose center lies on the axis of rotation, and every point moves through the same angle during a particular time interval" (Ex. 2023, at 29); and (2) "[w]hen a rigid body rotates about a fixed axis, every particle in the body moves in a circular path that lies in a plane perpendicular to the axis and is centered on the axis" (Ex. 2026, at 28). Ex. 2016 ¶ 73; *see also* Ex. 2027, at 2 ("Rotational motion . . . has to be circular") and Ex. 2022, at 1 ("A rotational motion . . . is a type of motion in which all points of a rigid body maintain a constant distance from an imaginary axis and rotate in circular paths about a common axis with a common velocity.").

That testimony by CamelBak's expert stands unrebutted, and we find it credible and consistent with the evidence of record. The only argument Trove musters in reply to this extrinsic evidence is that, because the '255 patent's mouthpiece is "resilient" and "not rigid," then "its points would not be expected to maintain a constant distance from the axis of rotation during movement and use." *See* Pet. Reply 6–7; *see also id.* at 8 ("Such deformation would cause parts of the mouthpiece to deviate from maintaining a constant distance from the axis of rotation."). But, as CamelBak correctly notes, the '255 patent specifies that, in the absence of compressive force from the user's teeth, the claimed mouthpiece is in "its closed, or sealed, configuration" and "maintains its shape" such that "it can

be assumed to a be a rigid body" during rotation about its pivotal axis. PO Sur-Reply 5–6 (citing Ex. 1001, 8:50–51; 8:64–9:6).

We find CamelBak's argument persuasive and supported by the specification. Trove submits no evidence to the contrary. Thus, we find that the extrinsic evidence additionally supports CamelBak's proposed construction of the "pivotal about an axis" limitation.

e. Conclusion

Taken together, the intrinsic and extrinsic evidence demonstrates that the proper construction of "wherein the resilient mouthpiece is pivotal about an axis defined by the pair of lateral projections as the pair of lateral projections rotate within the pair of sockets" is that the mouthpiece maintains a circular path of constant radius throughout its rotation about the pivotal axis defined by the lateral projections.

2. "wherein the resilient mouthpiece is adapted to resiliently compress responsive to compressive forces applied to the resilient mouthpiece by a user's teeth"

Both independent claims 1 and 20 of the '255 patent recite "wherein the resilient mouthpiece is adapted to resiliently compress responsive to compressive forces applied to the resilient mouthpiece by a user's teeth." Ex. 1002, 1:64–66 (limitation [1.b.3.iv]), 2:57–59.

CamelBak contends that "the use of the words 'adapted to' in this limitation requires more than a mere theoretical capability of the mouthpiece to compress." PO Resp. 40 (citing *Aspex Eyewear, Inc. v. Marchon Eyewear, Inc.*, 672 F.3d 1335, 1349 (Fed. Cir. 2012)). Rather, according to CamelBak, "the resilient mouthpiece must be designed or configured to resiliently compress responsive to compressive forces applied to the resilient mouthpiece by a user's teeth, and it is not sufficient that a resilient

mouthpiece can be made to be capable of such, e.g., by modification." *Id.* at 39–40. Construing "adapted to" in this manner, CamelBak argues, is consistent not only with the '255 patent specification's use of the phrase, but also with its generally understood meaning of "made to," "designed to," or "configured to." *See In re Man Mach. Interface Techs. LLC*, 822 F.3d 1282, 1286 (Fed. Cir. 2016) ("We have noted that the phrase 'adapted to' generally means 'made to,' 'designed to,' or 'configured to,' . . .."); *In re Giannelli*, 739 F.3d 1375, 1379 (Fed. Cir. 2014) (similar); *Aspex Eyewear*, 672 F.3d at 1349 (similar).

Trove, in turn, argues that this limitation recites only that the mouthpiece "possesses a particular degree of 'resilient[] compress[ability],'" and "[t]he remainder of the limitation simply describes what the structure *might do*, not a required condition." Pet. Reply 14–15. As such, Trove contends that CamelBak's proposed construction "improperly narrows the claim to require the mouthpiece to be reachable by a user's teeth." *Id.* at 15. Under Trove's proposed construction, then, this limitation "does not require a bite-actuated structure—only that the mouthpiece *can* compress if such forces are applied." *Id.* (emphasis added)

We find that the intrinsic evidence more clearly supports CamelBak's proposed construction. Here, the specification and figures of the '255 patent describe specific structural attributes indicating that "adapted to" has a narrow meaning that requires the resilient mouthpiece be designed or configured to be bite-actuated, as opposed to a broader meaning that simply requires the mouthpiece be capable of being compressed based on the nature of the material from which it is made. For instance, as described in the '255 patent,

> in a dispensing configuration . . . the mouthpiece is oriented in a suitable position from which a user may draw drink fluid from the drink bottle through mouthpiece 72 when the user bites upon the mouthpiece . . . [whereas] in a stowed configuration, . . . the mouthpiece is positioned closer to the base of the cap than in the dispensing configuration . . . corresponding to an orientation in which the mouthpiece is not suitably positioned for a user to bite upon the mouthpiece.

Ex. 1001, 3:21–34, Figs. 1, 2. Indeed, Figures 1 and 2, reproduced below, depict just such stowed and dispensing configurations.

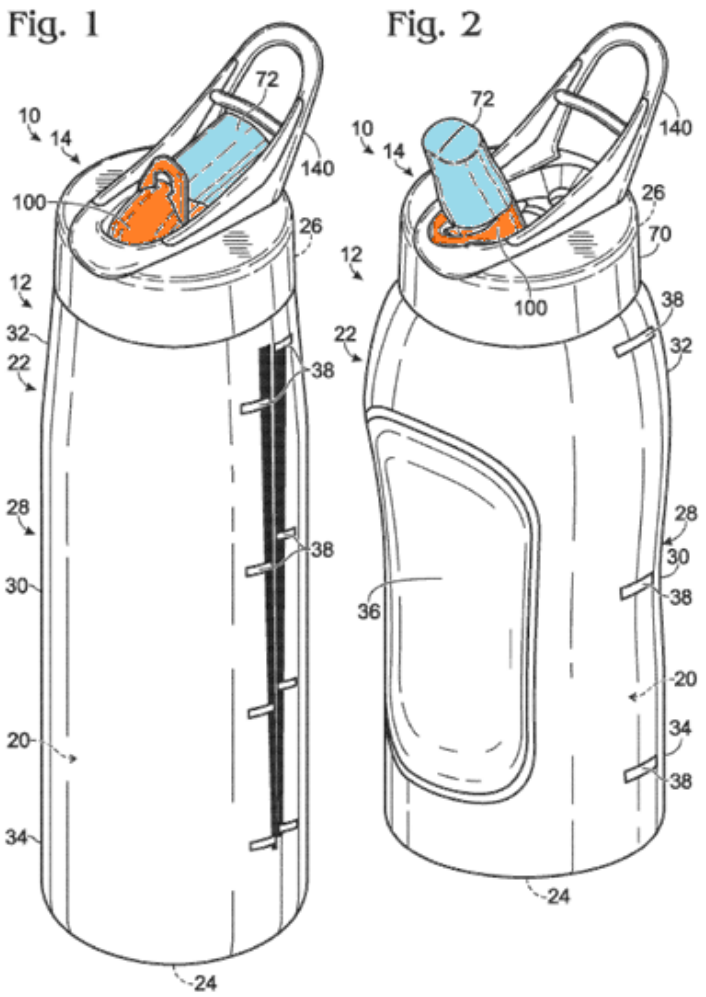

As shown, mouthpiece 72 is designed and configured to extend beyond pivotal mount 100 such that the mouthpiece is exposed to compressive forces applied by a user's teeth, as required by claims 1 and 20.

Indeed, the specification repeatedly refers to the mouthpiece as "bite-actuated mouthpiece 72" for selectively dispensing fluid therethrough. *See, e.g., id.* at 6:38–40 ("Cap assembly 14 further includes a mouthpiece, such as a bite-actuated mouthpiece 72, which is adapted to selectively permit drink fluid to flow therethrough."); *id.* at 6:65–7:1 ("As discussed, cap assembly 14 defines a fluid conduit 74 that extends from the fluid container to the bite-actuated mouthpiece so that drink fluid from container 12 may be selectively dispensed through mouthpiece 72.").

Moreover, numerous other figures of the '255 patent depict specific configurations enabling the resilient mouthpiece to be bitten by a user's teeth. For instance, Figures 10–15 of the '255 patent, reproduced below, illustrate several examples of "a suitable construction for bite-actuated mouthpiece 72." *Id.* at 8:16–19.

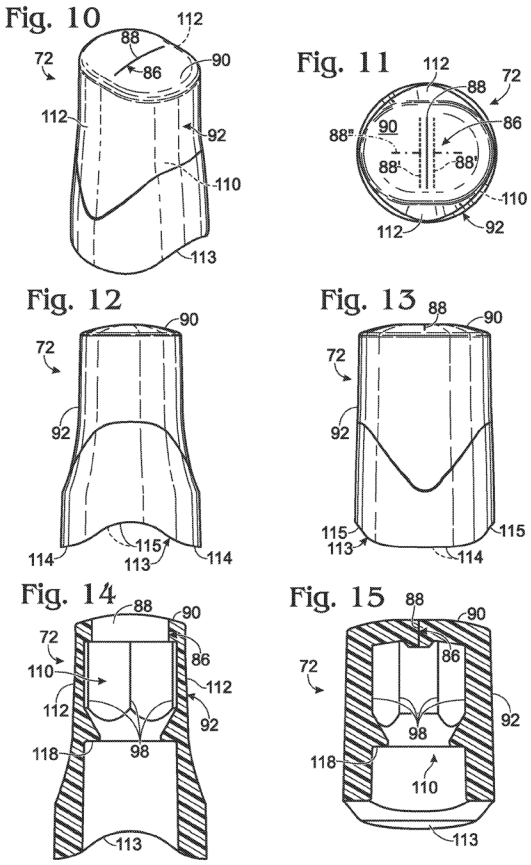

As shown and described, the bite-actuated mouthpiece consists of "valve, 72," which includes "a dispensing outlet, or opening, 86 that is defined by a slit 88 that extends through the dispensing face 90 of the mouthpiece." *Id.* at 8:14–22. In even greater detail, the specification describes the design and configuration of the bite-actuated mouthpiece—

> The sidewalls, or wall structure, 92 of the mouthpiece may be described as including one or more bite regions 112, which refer to opposed regions upon which a user may bite or otherwise apply compressive forces to urge the mouthpiece from its closed configuration to a dispensing configuration. . . .
>
> Mouthpiece 72 is resilient and biased to its closed configuration, such as is shown in FIGS. 10–15. In use, the mouthpiece is adapted to be configured to the dispensing configuration by a user placing the mouthpiece in the user's mouth and biting upon or otherwise compressing the appropriate portions of the sidewalls 92 of the mouthpiece, such as bite regions 112, to deform the mouthpiece to a position where the slit or opening is no longer sealed and instead defines a fluid pathway through which drink fluid may flow. . . . Mouthpiece 72 may be referred to as a self-sealing valve, or valve assembly, because the mouthpiece is constructed to automatically return to its closed, or sealed, configuration when the compressive forces, such as may be applied by a user's teeth or mouth, are no longer applied to maintain the mouthpiece in its dispensing configuration.

Ex. 1001, 8:33–9:3.

Those detailed descriptions demonstrate that "adapted to," as recited in claims 1 and 20, means that the resilient mouthpiece is specifically designed and configured to dispense fluid as a result of a user biting the mouthpiece, rather than merely being "capable of" being compressed. *See Giannelli*, 739 F.3d at 1379–80. Indeed, as disclosed, a distinct benefit of the resilient mouthpiece being bite-actuated "is that a user may position the drink bottle (and mouthpiece) to a desired drinking orientation, and even a

partially or completely inverted orientation, without drink fluid being dispensed from the mouthpiece" until the user bites upon the mouthpiece to commence fluid flow through self-sealing valve to the user. *Id.* at 10:9–19. Thus, the intrinsic evidence, i.e., the specification and figures of the '255 patent, confirm that the phrase "adapted to" means "designed or configured to" and is not satisfied by mere hypothetical capability. That is, as claimed, the resilient mouthpiece is designed or configured to compress based on actual forces applied by a user's teeth, as opposed to merely being capable of compression based on the inherent nature of the mouthpiece's material.

C. Obviousness

1. Ground 1—Obviousness Based on Nakajima

Trove argues that independent claim 1, and its dependent claims 3–5, 9–11, 13, 18, and 19, are unpatentable as obvious over Nakajima. *See* Pet. 19–51. CamelBak, in turn, disputes Trove's showing that Nakajima teaches claim 1's limitation 1[b][3][i] (as identified above in § I.D), which recites "*wherein the resilient mouthpiece is pivotal about an axis defined by the pair of lateral projections as the pair of lateral projections rotate within the pair of sockets*." *See* PO Resp. 45–65.

We begin with Trove's showing for claim 1. At the outset, we note that the parties agree that Nakajima discloses a cap assembly for a fluid container that includes the following components of claim 1:

> a cap assembly base,
>
> a pivotal mount provided with a pair of lateral projections,
>
> a pair of sockets in the cap assembly base into which the pair of lateral projections fit, and
>
> a resilient mouthpiece coupled to the pivotal mount and configured to be selectively pivoted between a stowed position and a dispensing position.

See PO Resp. 45, 65 (identifying only two deficiencies[9] with Trove's showing as to Nakajima); *see also* Hrg. Tr. 33:9–16 (same). Instead, the parties' dispute centers on whether Nakajima's resilient mouthpiece is "pivotal about an axis defined by the pair of lateral projections as [they] rotate within the pair of sockets," as required by claim 1.

In particular, Trove annotates Figures 1 and 3 of Nakajima, reproduced below, to illustrate how Nakajima satisfies the limitations of claim 1, including the disputed limitation relating to the mouthpiece's rotation about a pivotal axis defined by the pivotal mount's lateral projections. *See* Pet. 24–35.

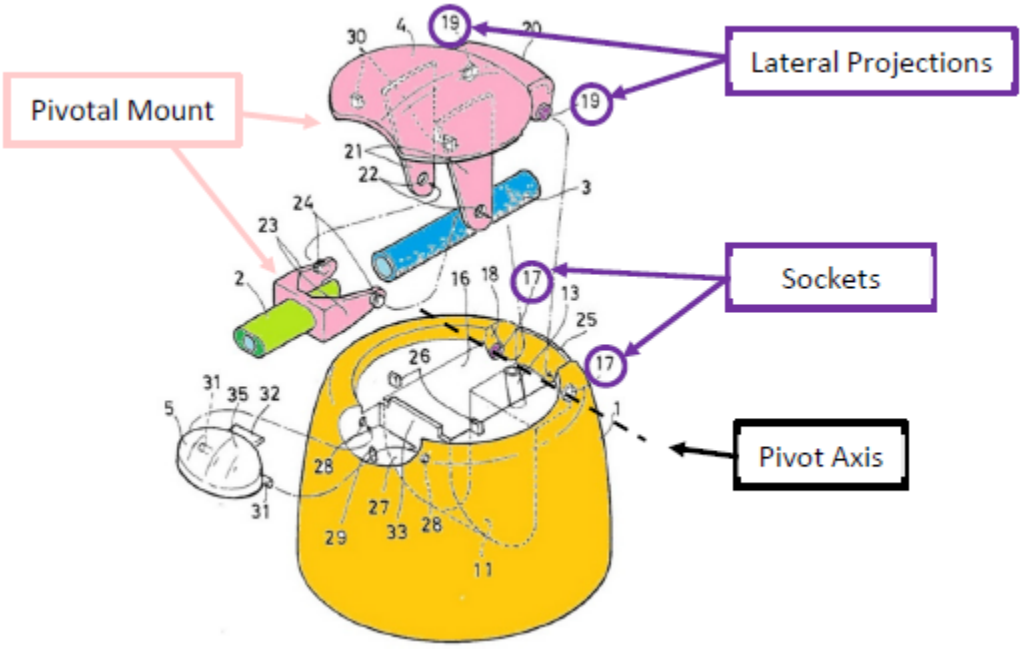

Annotated Figure 1 is an exploded perspective view of Nakajima's cap assembly. Trove identifies two aspects of Nakajima's cap assembly — lid 4 and arms 23 (collectively, pink)—as forming the claimed "pivotal

[9] Although CamelBak argues two deficiencies with Trove's showing, we address only one of those deficiencies, as it is dispositive.

mount." *Id.* at 24–27. Trove then identifies Nakajima's mouthpiece 2 (green), which is coupled to lid 4 via arms 23, as corresponding to the claimed "mouthpiece." *Id.* at 28–30. Particularly noteworthy is Trove's identification of a pivot axis (black dash line), as defined by Nakajima's sockets 17 and lateral projections 19 (collectively, purple), which Trove relies on to meet the disputed limitation reciting that the mouthpiece "is pivotal about an axis defined by the pair of lateral projections as the pair of lateral projections rotate within the pair of sockets." *Id.* at 33–35.

Trove additionally annotates Figure 3 of Nakajima, reproduced below, in alleging that Nakajima's mouthpiece 2 has an axis of rotation that corresponds to a pivotal axis defined by a pair of lateral projections as they rotate within a pair of sockets on the cap assembly's base, as claimed. *Id.* at 33–34.

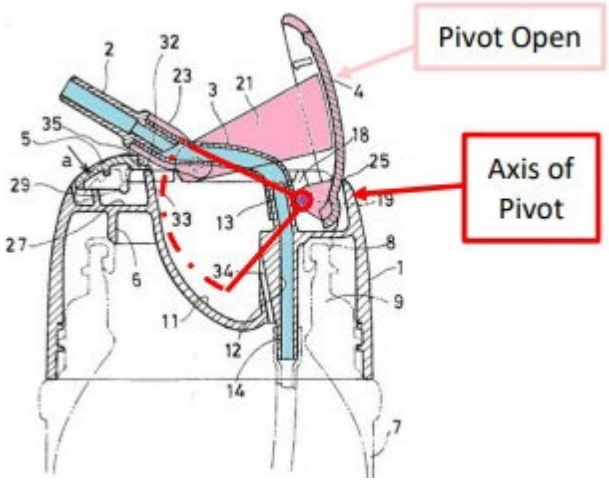

Annotated Figure 3 is a cross-sectional view of the assembled cap assembly depicting Nakajima's mouthpiece 2 in a dispensing position when lid 4 (pink) is rotated about an "Axis of Pivot" (red). According to Trove, the axis of pivot about which Nakajima's lid 4 rotates is also an axis of rotation for Nakajima's mouthpiece 2 "[b]ecause the mouthpiece is coupled to the lid." *Id.* at 34–35. And "[b]ecause the mouthpiece is coupled to the

lid," Trove explains, "it '*moves up and down* in conjunction with the opening and closing of the lid.'" *Id.* at 35 (quoting Ex. 1004 ¶ 3) (emphasis added). On that basis alone, Trove and its expert surmise that "Nakajima's mouthpiece pivots about the axis defined by the lateral projections." *Id.* (citing Ex. 1003 ¶ 103).

Although we agree with Trove that Nakajima's mouthpiece engages in up-and-down movement *relative to the pivot axis* identified in Trove's annotated figures, we disagree that Nakajima's mouthpiece is "*pivotal about an axis defined by the pair of lateral projections as [they] rotate within the pair of sockets*," as required by claim 1. As discussed above, the proper construction of this claim limitation requires that the mouthpiece moves with *rotational motion in a circular path of constant radius about the pivotal axis defined by the pair of lateral projections*. *See supra* § II.B.1. Nakajima, on the other hand, discloses that its mouthpiece moves with translational motion, i.e., up-and-down movement, relative to the pivotal axis defined by lateral projections 19 of Nakajima's lid 4—"[T]he mouthpiece *moves up and down* in conjunction with the opening and closing of the lid." Ex. 1004 ¶ 3 (emphasis added); *see also id.*, Abstract ("[T]he mouthpiece 2 moves up and down in conjunction with the opening and closing of the lid 4."). Indeed, although Trove relies exclusively on Nakajima's disclosure of up-and-down movement for the mouthpiece, Trove never explains how such up-and-down movement equates to rotational motion required by the disputed limitation of claim 1. Nor can it.

As shown in annotated Figures 1 and 3 above, Trove indisputably maps Nakajima's lid 4 to the claimed "pivotal mount" and maps the lid's lateral projections 19 to the claimed "axis." *See* Pet. 34 (citing Ex. 1004, annotating Figs. 1, 3 to show the claimed "axis"); *see also* Ex. 2025, 102:4–

103:11 (Trove's expert confirming as much). And, as shown by those annotated figures, as Nakajima's lid 4 (pink) opens, it engages in *clockwise rotational motion* about the axis (black) defined by Nakajima's lateral projections 19. However, where Nakajima's lid 4 rotates clockwise about the axis identified by Trove, Nakajima's mouthpiece 2 (green) moves in an entirely different manner relative to that axis. Importantly, as disclosed and shown, Nakajima's mouthpiece moves up and forward, i.e., counter-clockwise, when the lid 4 opens. *See* Ex. 1004 ¶ 14 ("[T]he mouthpiece 2 can protrude diagonally upward and forward . . . when the lid 4 is opened"). According to CamelBak's expert, this movement by Nakajima's mouthpiece "is translational motion," as opposed to the rotational motion of Nakajima's lid 4. Ex. 2016 ¶ 88 (citing 1004 ¶ 3). We find this expert testimony reasonable and consistent with Nakajima's disclosures.

Moreover, to the extent Nakajima's mouthpiece exhibits any rotational motion, it occurs solely about a second, and different, pivot axis for the mouthpiece. In particular, CamelBak's expert annotates (in red) Nakajima's previously-annotated Figure 1, as reproduced below, to show this second pivot axis, which is defined by Nakajima's protrusions 24, not Nakajima's lateral projections 19. *See* Ex. 2016 ¶ 88.

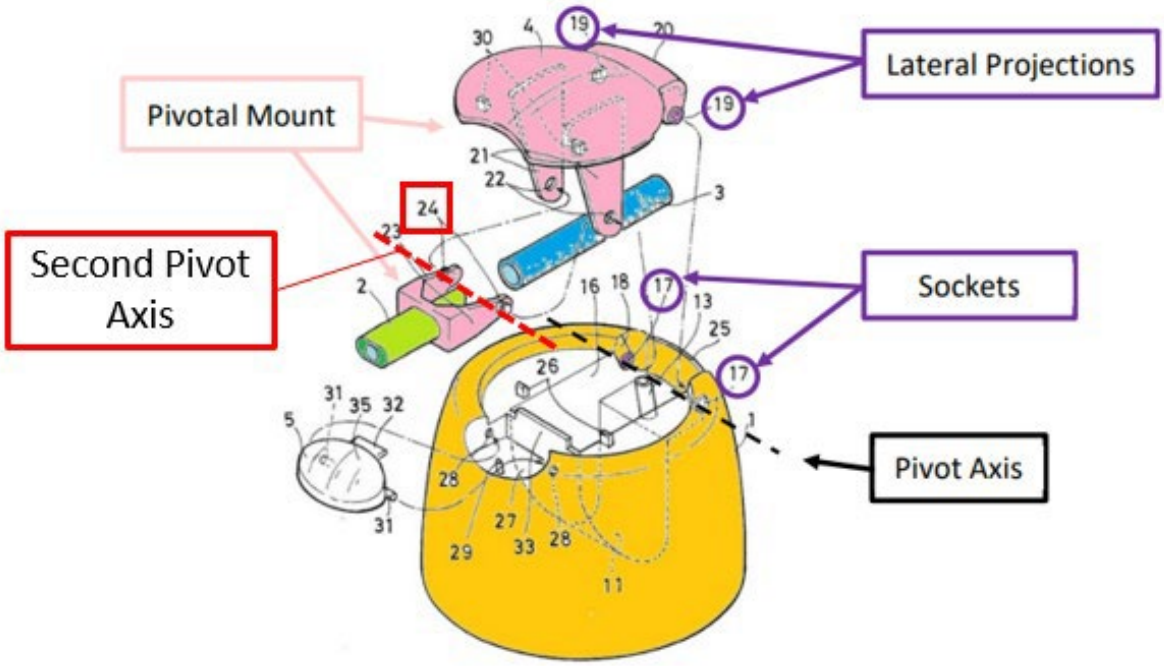

As shown above, the second pivot axis (red dashed line) defined by Nakajima's protrusions 24 is the axis about which Nakajima's mouthpiece (green) actually rotates, which is different than the pivotal axis (black) defined by Nakajima's lateral projections 19 and identified by Trove as the claimed "axis." *See* Ex. 2016 ¶ 88 (citing Ex. 1004 ¶ 16). Thus, at best, Nakajima's mouthpiece is rotatable about a separate axis defined by Nakajima's protrusions 24, *not* the axis defined by Nakajima's lateral projections 19 that Trove concedes is the claimed "axis."

Additionally persuasive are annotated versions of Nakajima's Figures 2 and 3, reproduced below, that CamelBak's expert submits to illustrate how the axis of rotation defined by Nakajima's protrusions 24 is "completely" different than the axis of rotation defined by Nakajima's lateral projections 19. Ex. 2016 ¶ 89 (annotating Ex. 1004, Figs. 2–3).

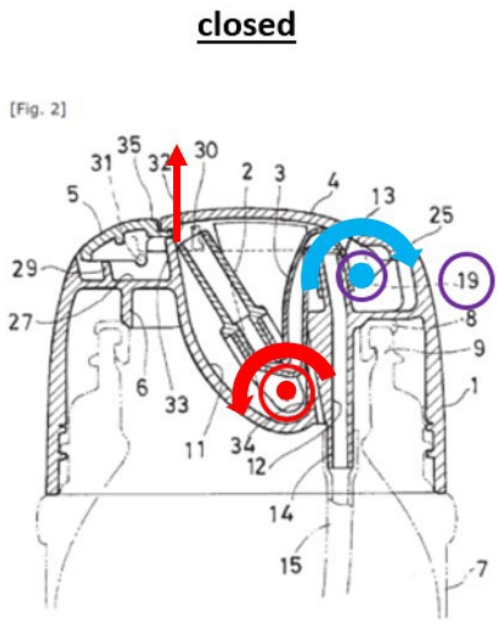

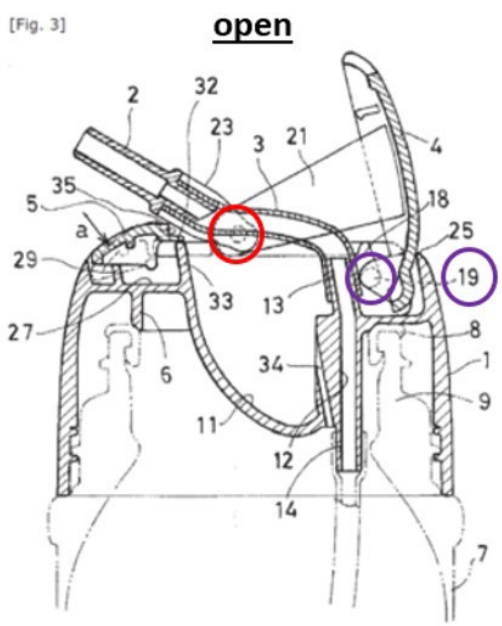

As shown above, the red annotations indicate that Nakajima's mouthpiece *2 moves in an upward path and with counter-clockwise rotation* about the axis defined by Nakajima's protrusions 24 as lid 4 approaches a fully open position, whereas the blue annotations indicate a *purely circular path of clockwise rotation* for lid 4 about the axis defined by Nakajima's lateral projections 19. *See id.* Thus, the axis of rotation (red), about which Nakajima's mouthpiece 2 actually rotates, is not the same as the axis of rotation (blue) defined by Nakajima's lateral projections 19, which indisputably corresponds to the claimed "axis."

As construed earlier, the requirement that the claimed mouthpiece is "pivotal about an axis defined by the pair of lateral projections as [they] rotate within the pair of sockets" means that it moves with rotational motion along a circular path that maintains a constant radius about the axis defined by the lateral projections. *See supra* § II.B.1. CamelBak's expert credibly testifies that Nakajima fails to satisfy this construction because its mouthpiece moves in a non-circular, up-and-down translational path relative

to that axis of rotation without any point on the mouthpiece ever maintaining a constant distance or radius *from the axis of rotation defined by Nakajima's lateral projections 19*. *See* Ex. 2016 ¶¶ 91–92. We find that testimony persuasive and consistent with Nakajima's disclosure.

Neither Trove nor its expert ever rebuts that testimony by CamelBak's expert. *See* Pet. Reply 19–21 (citing only Ex. 1003 ¶¶ 88, 102–103, as submitted with the original petition, without any citation to a rebuttal declaration). Nor does Trove otherwise offer any explanation or evidentiary support for its conclusion that Nakajima's up-and-down translational motion somehow constitutes the rotational motion required by claim 1, as properly construed.[10] *See id.* Indeed, in its reply, Trove argues only that CamelBak's "novel claim construction" of the rotational motion required by claim 1 "finds no support in the intrinsic and extrinsic record." *See id.* at 19. But, because we find that, when properly construed, the claimed rotational motion means the mouthpiece maintains a circular path of constant radius about the axis defined by the pair of lateral projections, we reject Trove's argument as unavailing. And, although we agree with Trove that Nakajima's mouthpiece eventually engages in rotational motion about a "Second Pivot Axis" as Nakajima's lid 4 approaches an open position (*id.* at 21), that rotational motion is about a different axis of rotation—one defined by Nakajima's protrusions 24 rather than the claimed axis defined by Nakajima's lateral projections 19. As a result, Nakajima's mouthpiece fails

[10] In its petition, Trove relies *solely* on Nakajima's disclosure that mouthpiece 2 "*moves up and down* in conjunction with the opening and closing of the lid" before concluding, without further explanation, that "Nakajima's mouthpiece pivots about the axis defined by the lateral projections." Pet. 34–35 (quoting Ex. 1004 ¶ 3) (emphasis added).

to meet the rotational motion "about an axis defined by the pair of lateral projections" that claim 1 requires.

Thus, for all the above reasons, Trove does not persuade us, by a preponderance of the evidence, that independent claim 1 is unpatentable as obvious over Nakajima.

One last, and significant, point on this issue. During the hearing, Trove repeatedly argued, for the first time, that Nakajima satisfies our narrower construction of the "pivotal about an axis" limitation—requiring that the mouthpiece rotates along a circular path of constant radius—because Nakajima's mouthpiece 2 "pivots clockwise" with lid 4 "during early opening" of the lid, that is, "the moments immediately following the opening from the stowed position." Hrg. Tr. 7:8–8:11; *see also id.* at 11:1–12:19 ("[W]hen in the stowed position, the mouthpiece and the lid are in the cavity in such a way that they are moving together . . . around 19. So it's the bundling together and the together movement *during the early stages* from the stowed position that does have that rotational component." (emphasis added)); 14:3–11 (same); 15:15–17 (same); 16:6–9 (same); 19:1–3 (same); 19:18–21 (same); 20:11–21 ("During the – so stowed position to early opening, during those first moments, we would say even, then there is a maintained distance relative to that axis, which would satisfy [a narrower construction]").

Trove contends this argument "echoes" a statement from our institution decision, and, thus, is properly and timely made. Hrg. Tr. 58:12–16. Granted, our institution decision stated that "from the closed position, for example, the Nakajima's mouthpiece would appear to move based on clockwise rotation about hinge shaft 19." Inst. Dec. 15. But no further

explanation is given for that statement,[11] and the parties were encouraged to further develop the record on this issue. *Id.* at 14–15. Thus, it was incumbent upon Trove, *in its reply brief*, to explain how Nakajima's mouthpiece engages in clockwise rotational motion about hinge shaft 19. It did not.

Nowhere does Trove's reply brief raise the argument that "clockwise" rotation of Nakajima's mouthpiece during "early opening" of the lid satisfies the "pivotal about an axis" limitation of the claims. *See* Pet. Reply 19–21. Indeed, Trove's reply brief focuses exclusively on: *first*, attacking CamelBak's so-called "novel claim construction" (a construction that we adopt here) (Pet. Reply 19); and, *second*, arguing that Nakajima's mouthpiece meets the "pivotal about an axis" limitation because it pivots about a "Second Pivot Axis" defined by Nakajima's protrusions 24 rather than the claimed pivotal axis defined by Nakajima's lateral projections 19 (*id.* at 21). Nor does Trove's petition fare any better—it does not even rely on *rotational motion* of Nakajima's mouthpiece to meet this limitation, i.e., "Limitation 1[b][3][i]," and instead argues that, "[b]ecause the mouthpiece is coupled to the lid, it '*moves up and down* in conjunction with the opening and closing of the lid.'" Pet. 33–35 (quoting Ex. 1004 ¶ 3 (emphasis added)).

Otherwise, Trove's petition and reply brief are silent as to any mention of *clockwise* rotation of the mouthpiece, let alone during the initial stage of the lid's opening. Moreover, when Trove was asked during the hearing to point to anything in either Nakajima or its expert's declaration

[11] Whether to institute is a "binary choice," where the Director need only "say yes or no to: an inter partes review." *SAS Institute, Inc. v. Iancu*, 584 U.S. 357, 364–65 (2018).

that might support this belated argument, it could not do so with any specificity.

> [PTAB Judge]: Let me ask, what – does your expert testify as to the – what happens in the early dispensing position?
>
> [Trove's Counsel]: I don't recollect our expert discussing early opening in detail.
>
> * * *
>
> [PTAB Judge]: And there's not – and there's nothing in Nakajima that talks about movement in that early dispensing position?
>
> [Trove's Counsel]: Yeah. That - my recollection is – it's mostly with respect to these Figures here. And unfortunately, for the detailed understanding of the entire flow of the movement here, what's simply illustrated in Figures 2 and 3 is the fully-closed, stowed position and then the fully-open, dispensing position. But it's the -
>
> [PTAB Judge]: It doesn't talk about what happens in between those two positions?
>
> [Trove's Counsel]: It discusses – how would I say? So the – it discusses the opening process and how you would transition between Figures 2 and 3. But it's not providing a level of precision around precisely where the mouthpiece is going to be at various points between the stowed and dispensing positions shown in [Figures] 2 and 3.

See Hrg. Tr. 60:24–61:23.

In fact, as discussed earlier, the only mention in Nakajima of the mouthpiece's initial movement is that "the mouthpiece 2 *moves up and down* in conjunction with the opening and closing of the lid 4." Ex. 1004, Abstract (emphasis added); *see also id.* at ¶ 3 (same). And, as shown in Nakajima's Figure 3, only when the mouthpiece approaches a dispensing position does Nakajima disclose the mouthpiece as having engaged in rotational motion, and, even then, only about protrusions 24, not lateral projections 19 (as

mapped to the claimed axis of rotation). That being the case, we reject Trove's belated argument as not only untimely, but also as unsupported by the evidence of record.

In sum, after reviewing the parties' arguments and the evidence of record, we determine that Trove has not shown, by a preponderance of the evidence, that independent claim 1, or the challenged claims depending therefrom, are unpatentable as obvious based on Nakajima.

2. Ground 2—Obviousness Based on Nakajima and Gardner

For this ground, Trove argues that claims 12 and 14–16, which depend directly or indirectly from claim 1, are unpatentable as obvious over Nakajima in combination with Gardner. *See* Pet. 51–64. In this challenge, Trove relies on Gardner solely for teaching the additional limitations of these dependent claims, but does not otherwise rely on Gardner to cure the deficiency of Nakajima that we found in its challenge of claim 1 from which these claims depend. *See id.* at 53–64. Thus, for the same reasons discussed above with respect to Ground 1, Trove's Ground 2 likewise fails.

3. Ground 3—Obviousness Based on Ribarits

Trove argues that claims 1, 9, 11, 13, and 17–19 are unpatentable as obvious over Ribarits alone. Pet. 65. In doing so, Trove presents a claim-by-claim and limitation-by-limitation mapping of these challenged claims to Ribarits. *See id.* at 67–83.

CamelBak, in turn, argues that this challenge fails because Ribarits's mouthpiece is not "adapted to resiliently compress responsive to compressive forces applied to the resilient mouthpiece by a user's teeth," as required by independent claim 1. PO Resp. 69. Instead, according to CamelBak, the configuration of Ribarits's drink bottle "prevents a user from

applying a bite force to the alleged *resilient mouthpiece* to resiliently compress it." *Id.* at 74 (citing Ex. 2016 ¶ 119).

We begin with Trove's showing. Trove annotates Figure 1 of Ribarits, reproduced below, to illustrate how Ribarits's drinking bottle includes a cap assembly that meets key components of claim 1. *See* Pet. 65.

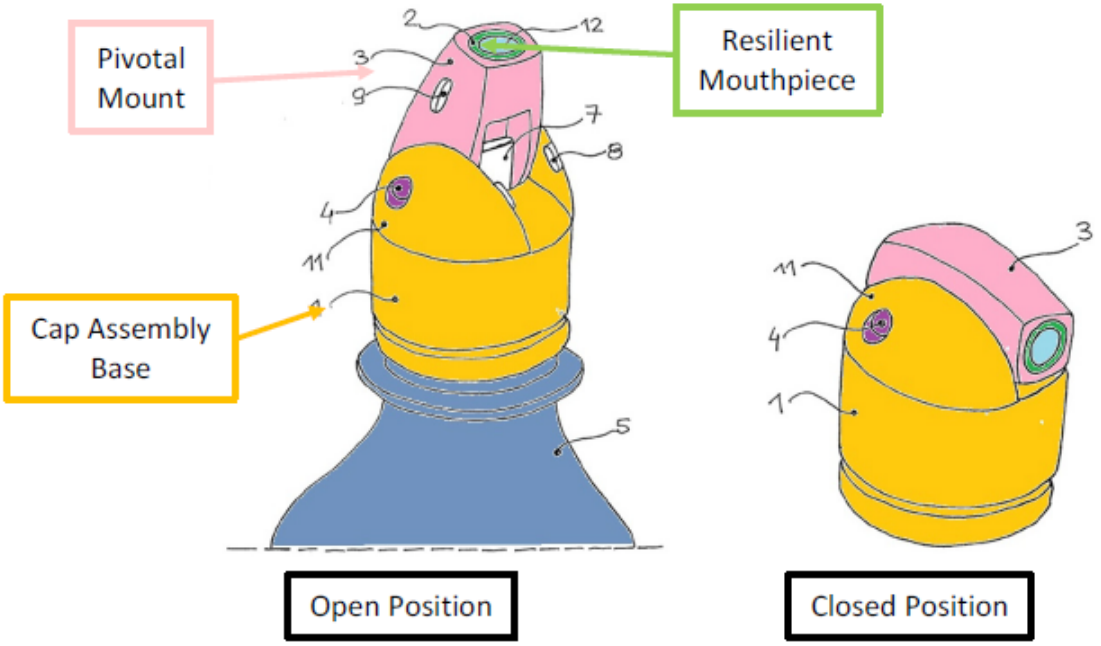

Annotated Figure 1 is a perspective view of Ribarits's drinking bottle with the cap assembly in an open position (left-side figure) and closed position (right-side figure). As shown, annotated Figure 1 depicts what Trove contends is the claimed "cap assembly base" (yellow), "pivotal mount" (pink), and "resilient mouthpiece" (green). According to Trove, "[t]he resilient mouthpiece of Ribarits is the *end portion* of the 'tubular element of rubber or latex.'" *Id.* at 71–72 (emphasis added).

Trove also annotates Figure 3 of Ribarits, reproduced below, to illustrate how Ribarits's mouthpiece (green) constitutes the end portion of tubular element 2 (blue). *See id.* at 73.

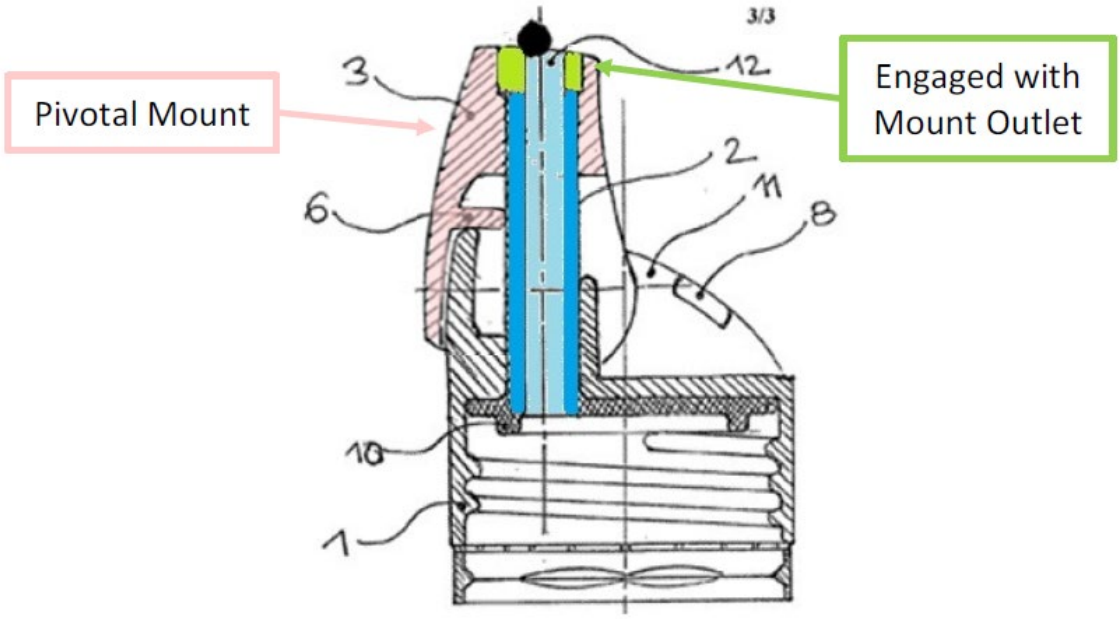

Annotated Figure 3 is a cross-sectional view of what Trove contends is the claimed "pivotal mount," i.e., drink spout 3 (pink), and the claimed "resilient mouthpiece," i.e., the end portion (green) of tubular element 2 (blue).[12] As shown, the circumference of the mouthpiece (green) is surrounded by the pivotal mount (pink), and the end of the mouthpiece is flush with the end of the pivotal mount.

Trove offers two arguments in attempting to show that Ribarits's mouthpiece is "adapted to resiliently compress responsive to compressive forces applied to the resilient mouthpiece by a user's teeth," as required by claim 1. *First*, Trove argues that this limitation is met merely by the fact that Ribarits's mouthpiece is made of a compressible material, i.e., "rubber or latex." Pet. 76. According to Trove, the "adapted to" language in this claim limitation "does not require a bite-actuated structure" and only requires that the mouthpiece be "capable of" compression by a user's teeth,

[12] The black dot in the figure appears to be a printing error in the original published patent. *See* Ex. 1006, Fig. 3.

and, thus, is met because Ribarits's mouthpiece "can compress *if such forces are applied*." Pet. Reply 15 (emphasis added); *see also id.* at 26 (arguing, "[o]nce the correct claim construction is applied, there is no dispute that Ribarits discloses this limitation").

But, as discussed above, we construed "adapted to" to mean that the resilient mouthpiece is *designed or configured to* compress based on actual forces applied by a user's teeth, as opposed to mere capability of being compressed based on the nature of the mouthpiece's material. *See supra* § II.B.2. In other words, the proper construction of "adapted to" excludes a mouthpiece that is merely hypothetically capable of being exposed to a user's bite, such as through modification or disassembly. Thus, Trove's first argument fails for the simple reason that Trove applies the wrong construction.

Second, Trove contends that, even assuming our construction, Ribarits still meets this limitation. *See* Pet. Reply 26–27. In particular, Trove argues that, despite the fact that Ribarits's mouthpiece may be surrounded about its circumference by the pivotal mount, it "is not 'surrounded' on the side from which the user drinks. This matters because, during use, a user would position teeth against that exposed portion of [the mouthpiece]." *Id.* at 27. To show as much, Trove submits annotated Figure 3 of Ribarits, reproduced below. *See id.*

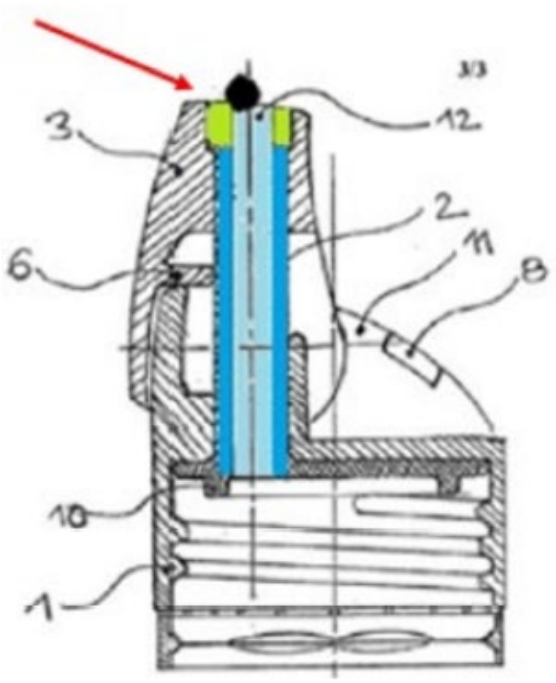

Annotated Figure 3 is a cross-sectional view of Ribarits's cap assembly depicting a red arrow pointing to what Trove contends is the exposed portion of Ribarits's mouthpiece (green). According to Trove, "[t]his exposed configuration results in the user's teeth applying compressive forces directly to the unshielded portion of Ribarits' mouthpiece." *Id.*

That argument fails, however, because it is based on pure conjecture. Although Trove cites the testimony of CamelBak's expert as support for its argument, Trove is mistaken. *See id.* (citing Ex. 2016 ¶ 119; Ex. 1018, 34:23–35:8). CamelBak's expert actually said the very opposite, namely, that Ribarits's drink spout 3, which Trove indisputably maps to the claimed "pivotal mount," would *prevent* a user's teeth and lips from applying compressive force to Ribarits's tubular element 2, whose end portion Trove maps to the claimed "mouthpiece"—

> In fact, Ribarits appears to be intentionally designed to prohibit the type of deformation of the mouthpiece required by

> the ’255 patent claims. The drink spout 3 [i.e., the claimed “pivotal mount”] completely surrounds the tubular element 2 [i.e., the claimed “mouthpiece”], indicating that it is meant to *protect* the tubular element from any deformation caused by the user’s teeth.

Ex. 2016 ¶ 119. Moreover, on cross-examination, CamelBak’s expert reiterated that, as configured, Ribarits’s drink spout 3 (i.e., pivotal mount) prevents a user from biting the mouthpiece despite its exposure to the user’s mouth—

> Q. [by Trove’s counsel] . . . Is it your understanding that a user would need to bite drinking spout 3 [which Trove maps to the claimed “pivotal mount”] to drink from it?
>
> A. [by CamelBak’s expert] No, but the drinking spout is engaged by both the teeth and the lips. I mean, they come together as a package. So when you are using this drinking spout, it’s certainly conceivable that one would bite it, but nothing would happen. That’s the point. The drinking spout prevents the tube from being inadvertently closed during the drinking process. I think that’s what a POSITA would understand this structure to do. . . . What’s presented to me [in Ribarits] is a structure which does protect the tube from compression during the drinking process.

Ex. 1018, 34:23–35:21.

If anything, that testimony by CamelBak’s expert reasonably shows that, even if the end portion of Ribarits’s mouthpiece 2 is exposed to the user’s mouth, its configuration within Ribarits’s drink spout 3 nonetheless shields mouthpiece from being bitten by the user during the drinking process. That is because, as shown above in Trove’s annotated Figures 1 and 3 from Ribarits, not only is the mouthpiece (green) surrounded by the pivotal mount (pink), but the end of the mouthpiece is flush with, and does not extend past, the pivotal mount, thereby preventing it from being exposed to a user’s bite. As such, Ribarits’s mouthpiece cannot be “adapted to

resiliently compress responsive to compressive forces applied to the resilient mouthpiece by a user's teeth" if it is prevented from receiving those compressive forces in the first place. Based on that deficiency, Trove fails to demonstrate, by preponderance of the evidence, that independent claim 1, and claims 9, 11, 13, and 17–19 depending therefrom, are unpatentable as obvious over Ribarits.

4. Ground 4—Obviousness Based on Ribarits, Panicci, and Hughes

Trove argues that claims 2–7 and 20–23 are unpatentable as obvious over Ribarits in combination with Panicci and Hughes. *See* Pet. 83–99. In challenging dependent claims 2–7, however, Trove does not rely on either Panicci or Hughes to cure the deficiency of Ribarits that we found in its challenge of independent claim 1. Nor, in challenging independent claim 20 and dependent claims 21–23, does Trove cure the deficiency with Ribarits, relying on "the same reasons discussed in Ground 3 above" with respect to Ribarits's alleged disclosure of limitations overlapping with claim 1 and on Panicci and Hughes solely for the additional limitation of "a dust cover." *See id.* at 97–99. Thus, for the same reasons that Trove's Ground 3 fails, so does Ground 4.

III. CONCLUSION

Claims	35 U.S.C. §	Basis	Claims Shown Unpatentable	Claims Not Shown Unpatentable
1, 3–5, 9–11, 13, 18, 19	103	Nakajima		1, 3–5, 9–11, 13, 18, 19
12, 14–16	103	Nakajima, Gardner		12, 14–16
1, 9, 11, 13, 17–19	103	Ribarits		1, 9, 11, 13, 17–19
2–7, 20–23	103	Ribarits, Panicci, Hughes		2–7, 20–23
Overall Outcome				1–7, 9–23

IV. ORDER

Accordingly, it is hereby:

ORDERED that claims 1–7 and 9–23 of U.S. Patent 10,676,255 C1 have not been shown to be unpatentable under 35 U.S.C. § 103; and

FURTHER ORDERED that, because this is a Final Written Decision, the parties to the proceeding seeking judicial review of the decision must comply with the notice and service requirements of 37 C.F.R. § 90.2.

FOR PETITIONER:

Ali S. Razai
Dion M. Bregman
Alexander B. Stein
Jacob L. Peterson
MORGAN, LEWIS & BOCKIUS LLP
ali.razai@morganlewis.com
dion.bregman@morganlewis.com
alexander.stein@morganlewis.com
jacob.peterson@morganlewis.com

FOR PATENT OWNER:

Ryan Schletzbaum
Jason Mudd
SHOOK HARDY & BACON LLP
rschletzbaum@shb.com
jmudd@shb.com