Trials@uspto.gov
571.272.7822

Paper No. 18
Entered: April 27, 2021

UNITED STATES PATENT AND TRADEMARK OFFICE

BEFORE THE PATENT TRIAL AND APPEAL BOARD

LENOVO (UNITED STATES) INC.,
Petitioner,

v.

NOKIA TECHNOLOGIES OY,
Patent Owner.

IPR2020-01685, IPR2021-00035, IPR2021-00036 (Patent 6,950,469 B2);
IPR2021-00037, IPR2021-00038, IPR2021-00039 (Patent 7,280,599 B2);
IPR2021-00040, IPR2021-00041, IPR2021-00042,
IPR2021-00043 (Patent 8,036,273 B2)[1]

Before BARBARA A. PARVIS, JENNIFER MEYER CHAGNON, and MONICA S. ULLAGADDI, *Administrative Patent Judges.*

CHAGNON, *Administrative Patent Judge.*

DECISION
Settlement Prior to Institution of Trial
37 C.F.R. § 42.74

---

[1] This Order applies to each of the listed proceedings. The parties are not authorized to use this style heading for any subsequent papers.

I. INTRODUCTION

With the Board's authorization, Petitioner and Patent Owner (collectively, "the Parties") filed a Joint Motion to terminate each of the above-identified proceedings. Paper 18[2] ("Mot."). Along with each Joint Motion, the Parties filed a copy of a confidential Settlement Agreement (Ex. 1020) and Patent Agreement Terms (Ex. 1021 ("Term Sheet")), as well as a Joint Request to Treat the Settlement Agreement as Business Confidential Information pursuant to 35 U.S.C. § 317(b) and 37 C.F.R. § 42.74(c) (Paper 20 ("Joint Request")).

II. DISUCSSION

In the Joint Motion, the Parties represent that they "have executed a settlement agreement that resolves all of their disputes concerning U.S. Patent Nos. 6,950,469, 7,280,599, and 8,036,273." Mot. 3. The Parties further represent that "a true and correct copy of the Litigation Settlement Agreement has been filed." *Id.* at 4; Ex. 1020. The Settlement Agreement references a Term Sheet, which also has been filed. Mot. 4; Ex. 1021. The Parties note that the Settlement Agreement "references another potential agreement, but the parties have not entered into that agreement as of this filing, and there are no other agreements between the parties." Mot. 4. The Parties, thus, confirm "that the documents filed as Exhibits 1020 [(i.e., the Settlement Agreement)] and 1021 [(i.e., the Term Sheet)] represent all

[2] For purposes of expediency, we cite to Papers and Exhibits filed in IPR2020-01685. Corresponding Papers and Exhibits were filed in each of the captioned proceedings, as shown in the Appendix.

Patent Owner's Exhibit 2003, p. 2
Amazon et al v. Nokia
IPR2024-01139

agreements made in connection with, or in contemplation of, the termination of this proceeding. All such agreements have been filed with the Board as required by 35 U.S.C. § 317(b) and 37 C.F.R. § 42.74(b)." *Id.*

This proceeding is still in its preliminary stages. We have not entered a decision on whether to institute *inter partes* review in these proceedings. In view of the early stage of these proceedings and the settlement between the parties, we determine that good cause exists to terminate these proceedings with respect to the parties.

We also have reviewed the Settlement Agreement and Term Sheet, and we determine that the Settlement Agreement and Term Sheet contain business confidential information regarding the terms of the settlement, and that good cause exists to treat the Settlement Agreement and Term Sheet as business confidential information under 37 C.F.R. § 42.74(c).

This Order does not constitute a final written decision pursuant to 35 U.S.C. § 318(a).

According, it is

ORDERED that the parties' Joint Request to treat the Settlement Agreement and Term Sheet as business confidential information under 37 C.F.R. § 42.74(c) is *granted* in each of the captioned proceedings, and the Settlement Agreement and Term Sheet shall be kept separate from the files of respective U.S. Patent Nos. 6,950,469 B2, 7,280,599B2, and 8,036,273 B2, and made available only to Federal Government agencies on written request, or to any person on a showing of good cause, pursuant to 35 U.S.C. § 317(b) and 37 C.F.R. § 42.74(c); and

IPR2020-01685, IPR2021-00035, IPR2021-00036 (Patent 6,950,469 B2);
IPR2021-00037, IPR2021-00038, IPR2021-00039 (Patent 7,280,599 B2);
IPR2021-00040, IPR2021-00041, IPR2021-00042,
IPR2021-00043 (Patent 8,036,273 B2)

FURTHER ORDERED that the parties' Joint Motion to Terminate is *granted* in each of the captioned proceedings; the Petition in each of IPR2020-01685, IPR2021-00035, IPR2021-00036, IPR2021-00037, IPR2021-00038, IPR2021-00039, IPR2021-00040, IPR2021-00041, IPR2021-00042, and IPR2021-00043 is dismissed; and the captioned proceedings are *terminated.*

Patent Owner's Exhibit 2003, p. 4
Amazon et al v. Nokia
IPR2024-01139

IPR2020-01685, IPR2021-00035, IPR2021-00036 (Patent 6,950,469 B2);
IPR2021-00037, IPR2021-00038, IPR2021-00039 (Patent 7,280,599 B2);
IPR2021-00040, IPR2021-00041, IPR2021-00042,
IPR2021-00043 (Patent 8,036,273 B2)

APPENDIX

Proceeding	Joint Motion	Joint Request	Settlement Agreement	Term Sheet
IPR2020-01685	Paper 18	Paper 20	Ex. 1020	Ex. 1021
IPR2021-00035	Paper 16	Paper 17	Ex. 1120	Ex. 1121
IPR2021-00036	Paper 15	Paper 17	Ex. 1220	Ex. 1221
IPR2021-00037	Paper 15	Paper 16	Ex. 1018	Ex. 1019
IPR2021-00038	Paper 15	Paper 16	Ex. 1119	Ex. 1120
IPR2021-00039	Paper 15	Paper 16	Ex. 1218	Ex. 1219
IPR2021-00040	Paper 15	Paper 16	Ex. 1018	Ex. 1019
IPR2021-00041	Paper 15	Paper 16	Ex. 1118	Ex. 1119
IPR2021-00042	Paper 17	Paper 18	Ex. 1218	Ex. 1219
IPR2021-00043	Paper 15	Paper 16	Ex. 1319	Ex. 1320

Patent Owner's Exhibit 2003, p. 5
Amazon et al v. Nokia
IPR2024-01139

IPR2020-01685, IPR2021-00035, IPR2021-00036 (Patent 6,950,469 B2);
IPR2021-00037, IPR2021-00038, IPR2021-00039 (Patent 7,280,599 B2);
IPR2021-00040, IPR2021-00041, IPR2021-00042,
IPR2021-00043 (Patent 8,036,273 B2)

PETITIONER:

Grant Rowan
Joseph Haag
Haixia Lin
Jonathan Knight
WILMER CUTLER PICKERING HALE AND DORR LLP
grant.rowan@wilmerhale.com
joseph.haag@wilmerhale.com
haixia.lin@wilmerhale.com
jonathan.knight@wilmerhale.com

PATENT OWNER:

David Frist
John Haynes
Nicholas Tsui
ALSTON & BIRD LLP
david.frist@alston.com
john.haynes@alston.com
nick.tsui@alston.com

Richard Kamprath
Theodore Stevenson, III
MCKOOL SMITH, P.C.
rkamprath@mckoolsmith.com
tstevenson@mckoolsmith.com

Patent Owner's Exhibit 2003, p. 6
Amazon et al v. Nokia
IPR2024-01139

AO 120 (Rev. 08/10)

TO: Mail Stop 8 Director of the U.S. Patent and Trademark Office P.O. Box 1450 Alexandria, VA 22313-1450	REPORT ON THE FILING OR DETERMINATION OF AN ACTION REGARDING A PATENT OR TRADEMARK

In Compliance with 35 U.S.C. § 290 and/or 15 U.S.C. § 1116 you are hereby advised that a court action has been filed in the U.S. District Court Eastern District of North Carolina on the following

☐ Trademarks or ☑ Patents. (☐ the patent action involves 35 U.S.C. § 292.):

DOCKET NO.	DATE FILED	U.S. DISTRICT COURT
5:19-CV-427-BO	9/25/2019	Eastern District of North Carolina

PLAINTIFF	DEFENDANT
Nokia Technologies Oy	Lenovo (Shanghai) Electronics Technology Co., Ltd. et al

PATENT OR TRADEMARK NO.	DATE OF PATENT OR TRADEMARK	HOLDER OF PATENT OR TRADEMARK
1 6,856,701		
2 6,950,469		
3 6,968,005		
4 7,263,125		
5 7,280,599		

In the above—entitled case, the following patent(s)/ trademark(s) have been included:

DATE INCLUDED	INCLUDED BY ☐ Amendment ☐ Answer ☐ Cross Bill ☐ Other Pleading	
PATENT OR TRADEMARK NO.	DATE OF PATENT OR TRADEMARK	HOLDER OF PATENT OR TRADEMARK
1 7,532,808		
2 7,724,818		
3 8,036,273		
4 8,144,764		
5 9,800,891		

In the above—entitled case, the following decision has been rendered or judgement issued:

DECISION/JUDGEMENT

CLERK	(BY) DEPUTY CLERK	DATE
PETER A. MOORE, JR.	Joann Rudd, Deputy	9/26/2019

Copy 1—Upon initiation of action, mail this copy to Director Copy 3—Upon termination of action, mail this copy to Director
Copy 2—Upon filing document adding patent(s), mail this copy to Director Copy 4—Case file copy

Patent Owner's Exhibit 2003, p. 7
Amazon et al v. Nokia
IPR2024-01139

AO 120 (Rev. 08/10)

TO: Mail Stop 8 Director of the U.S. Patent and Trademark Office P.O. Box 1450 Alexandria, VA 22313-1450	REPORT ON THE FILING OR DETERMINATION OF AN ACTION REGARDING A PATENT OR TRADEMARK

In Compliance with 35 U.S.C. § 290 and/or 15 U.S.C. § 1116 you are hereby advised that a court action has been filed in the U.S. District Court Eastern District of North Carolina on the following

☐ Trademarks or ☑ Patents. (☐ the patent action involves 35 U.S.C. § 292.):

DOCKET NO.	DATE FILED	U.S. DISTRICT COURT
5:19-CV-427-BO	9/25/2019	Eastern District of North Carolina

PLAINTIFF	DEFENDANT
Nokia Technologies Oy	Lenovo (Shanghai) Electronics Technology Co., Ltd. et al

PATENT OR TRADEMARK NO.	DATE OF PATENT OR TRADEMARK	HOLDER OF PATENT OR TRADEMARK
1 6,856,701		
2 6,950,469		
3 6,968,005		
4 7,263,125		
5 7,280,599		

In the above—entitled case, the following patent(s)/ trademark(s) have been included:

DATE INCLUDED	INCLUDED BY ☐ Amendment ☐ Answer ☐ Cross Bill ☐ Other Pleading	
PATENT OR TRADEMARK NO.	DATE OF PATENT OR TRADEMARK	HOLDER OF PATENT OR TRADEMARK
1 7,532,808		
2 7,724,818		
3 8,036,273		
4 8,144,764		
5 9,800,891		

In the above—entitled case, the following decision has been rendered or judgement issued:

DECISION/JUDGEMENT

CLERK	(BY) DEPUTY CLERK	DATE
PETER A. MOORE, JR.	Joann Rudd, Deputy	9/26/2019

Copy 1—Upon initiation of action, mail this copy to Director Copy 3—Upon termination of action, mail this copy to Director
Copy 2—Upon filing document adding patent(s), mail this copy to Director Copy 4—Case file copy

Patent Owner's Exhibit 2003, p. 8
Amazon et al v. Nokia
IPR2024-01139

UNITED STATES PATENT AND TRADEMARK OFFICE

CERTIFICATE OF CORRECTION

PATENT NO. : 7,280,599 B2
APPLICATION NO. : 11/090717
DATED : October 9, 2007
INVENTOR(S) : Karczewicz et al.

It is certified that error appears in the above-identified patent and that said Letters Patent is hereby corrected as shown below:

In column 46, line 39, in claim 3, delete "second" and insert --and--, therefor.

In column 47, line 47, in claim 12, delete "2_N" and insert --2^N--, therefor.

In column 51, line 44, in claim 34, delete "zero" and insert --2^N--, therefor.

In column 50, line 56, in claim 27, delete "23" and insert --44--, therefor.

In column 50, line 58, in claim 28, delete "26" and insert --46--, therefor.

Signed and Sealed this

Fourteenth Day of July, 2009

John Doll

JOHN DOLL
Acting Director of the United States Patent and Trademark Office

SPE RESPONSE FOR CERTIFICATE OF CORRECTION

DATE 2/24/09

Paper No.: —

TO SPE OF : ART UNIT 2621

SUBJECT : Request for Certificate of Correction for Appl. No.: 11/090717 Patent No.: 7280599 B2

Please respond to this request for a certificate of correction within 7 days.

FOR IFW FILES:

Please review the requested changes/corrections as shown in the **COCIN** document(s) in the IFW application image. No new matter should be introduced, nor should the scope or meaning of the claims be changed.

Please complete the response (see below) and forward the completed response to scanning using document code **COCX**.

FOR PAPER FILES:

Please review the requested changes/corrections as shown in the attached certificate of correction. Please complete this form (see below) and forward it with the file to:

Certificates of Correction Branch (CofC)
South Tower - 9A22
Palm Location 7580

Virginia Tolbert
Certificates of Correction Branch
703-308-9390 ext. 113

Thank You For Your Assistance

The request for issuing the above-identified correction(s) is hereby:
Note your decision on the appropriate box.

- ☑ **Approved** — **All** changes apply.
- ☐ **Approved in Part** — Specify below which changes **do not** apply.
- ☐ **Denied** — State the reasons for denial below.

Comments: none

Mehrdad Dastouri
Digitally signed by Mehrdad Dastouri
DN: cn=Mehrdad Dastouri, c=US, o=USPTO, ou=AU2621, email=mehrdad.dastouri@uspto.gov
Reason: I am approving this document
Date: 2009.06.17 17:30:06 -04'00'

SPE

2621
Art Unit

Patent Owner's Exhibit 2003, p. 10
Amazon et al v. Nokia
IPR2024-01139

SPE RESPONSE FOR CERTIFICATE OF CORRECTION

DATE 2/24/09

Paper No.: —

TO SPE OF : ART UNIT 2621

SUBJECT : Request for Certificate of Correction for Appl. No.: 11/090717 Patent No.: 7280599 B2

Please respond to this request for a certificate of correction within 7 days.

FOR IFW FILES:

Please review the requested changes/corrections as shown in the **COCIN** document(s) in the IFW application image. No new matter should be introduced, nor should the scope or meaning of the claims be changed.

Please complete the response (see below) and forward the completed response to scanning using document code **COCX**.

FOR PAPER FILES:

Please review the requested changes/corrections as shown in the attached certificate of correction. Please complete this form (see below) and forward it with the file to:

Certificates of Correction Branch (CofC)
South Tower - 9A22
Palm Location 7580

Virginia Tolbert
Certificates of Correction Branch
703-308-9390 ext. 113

Thank You For Your Assistance

The request for issuing the above-identified correction(s) is hereby:
Note your decision on the appropriate box.

- ☐ **Approved** — **All** changes apply.
- ☐ **Approved in Part** — Specify below which changes **do not** apply.
- ☐ **Denied** — State the reasons for denial below.

Comments: _____

SPE
Art Unit

Patent Owner's Exhibit 2003, p. 11
Amazon et al v. Nokia
IPR2024-01139

Practitioners Docket No. 982-010567-US (PAR) *PATENT*

IN THE UNITED STATES PATENT AND TRADEMARK OFFICE

Patent Number: 7,280,599 B2

Issued: October 09, 2007

Name of Patentee: Karczewicz et al.

Title of Invention: METHOD FOR SUB-PIXEL VALUE INTERPOLATION

Commissioner for Patents
P.O. Box 1450
Alexandria, VA 22313-1450

ATTENTION: Decision and Certificate of Correction
Branch of the Patent Issue Division

REQUEST FOR CERTIFICATE OF CORRECTION OF PATENT FOR PTO MISTAKE (37 C.F.R. 1.322(a))

1. Attached, is Form PTO-1050.

2. The exact page and line number where the errors are shown correctly in the application file are:

All errors are shown correctly in the Amendment under 37 CFR 1.312 that was filed on August 15, 2007. The respective claim and line numbers are as follows:

Page 4, in claim 53, line 2.

Page 6, in claim 61, line 5.

Page 13, in claim 81, line 5.

Page 16, in claim 97, line 2.

Page 16, in claim 99, line 2.

3. Please send the Certificate to:

Name: Geza C. Ziegler, Jr.

Address: Customer No. 2512

Patent Owner's Exhibit 2003, p. 12
Amazon et al v. Nokia
IPR2024-01139

Signature of assignee or person authorized to sign on behalf of assignee

Geza C. Ziegler, Jr.

(*type or print name of authorized person signing*)

Attorney of Record

Title of authorized person signing

Patent Owner's Exhibit 2003, p. 13
Amazon et al v. Nokia
IPR2024-01139

UNITED STATES PATENT AND TRADEMARK OFFICE
CERTIFICATE OF CORRECTION

Patent No.: 7,280,599 B2

Application No.: 11/090,717

Issue Date: 10/09/2007

Inventor(s): Karczewicz et al.

It is certified that an error or errors appear in the above-identified patent and that said Letters Patent is hereby corrected as shown below:

In column 46, line 39, in claim 3, delete "second" and insert --and--, therefor.

In column 47, line 47, in claim 12, delete "2_N" and insert --2^N--, therefor.

In column 51, line 44, in claim 34, delete "zero" and insert --2^N--, therefor.

In column 50, line 26, in claim 27, delete "23" and insert --44--, therefor.

In column 50, line 28, in claim 28, delete "26" and insert --46--, therefor.

MAILING ADDRESS OF SENDER (Please do not use customer number below):

Perman & Green, LLP
425 Post Road
Fairfield, CT 06824

Electronic Acknowledgement Receipt

EFS ID:	4756421
Application Number:	11090717
International Application Number:	
Confirmation Number:	6454
Title of Invention:	METHOD FOR SUB-PIXEL VALUE INTERPOLATION
First Named Inventor/Applicant Name:	Marta Karczewicz
Correspondence Address:	Perman & Green - 425 Post Road - Fairfield CT 06430-6232 US 2032591800 -
Filer:	GEZA C ZIEGLER JR/Fran Snow
Filer Authorized By:	GEZA C ZIEGLER JR
Attorney Docket Number:	442-010567-US (C01)
Receipt Date:	09-FEB-2009
Filing Date:	25-MAR-2005
Time Stamp:	13:17:32
Application Type:	Utility under 35 USC 111(a)

Payment information:

Submitted with Payment	no

File Listing:

Document Number	Document Description	File Name	File Size(Bytes)/ Message Digest	Multi Part /.zip	Pages (if appl.)
1	Miscellaneous Incoming Letter	LtrCallingAttntoErrorLtrsPatent090209.pdf	33082 ebc669708eb66f43496cb30138200a76e8d609b9	no	1
Warnings:					
Information:					
2	Request for Certificate of Correction	RequestCertCorrection090209.pdf	34503 234f02faaf06f6e4e80ce06647463e11c23af02f	no	2
Warnings:					
Information:					
3	Request for Certificate of Correction	CertCorrection090209.pdf	22351 e7b4b272f0118c4e79dc75e62fca4bf509341d94	no	1
Warnings:					
Information:					
		Total Files Size (in bytes):	89936		

This Acknowledgement Receipt evidences receipt on the noted date by the USPTO of the indicated documents, characterized by the applicant, and including page counts, where applicable. It serves as evidence of receipt similar to a Post Card, as described in MPEP 503.

<u>New Applications Under 35 U.S.C. 111</u>
If a new application is being filed and the application includes the necessary components for a filing date (see 37 CFR 1.53(b)-(d) and MPEP 506), a Filing Receipt (37 CFR 1.54) will be issued in due course and the date shown on this Acknowledgement Receipt will establish the filing date of the application.

<u>National Stage of an International Application under 35 U.S.C. 371</u>
If a timely submission to enter the national stage of an international application is compliant with the conditions of 35 U.S.C. 371 and other applicable requirements a Form PCT/DO/EO/903 indicating acceptance of the application as a national stage submission under 35 U.S.C. 371 will be issued in addition to the Filing Receipt, in due course.

<u>New International Application Filed with the USPTO as a Receiving Office</u>
If a new international application is being filed and the international application includes the necessary components for an international filing date (see PCT Article 11 and MPEP 1810), a Notification of the International Application Number and of the International Filing Date (Form PCT/RO/105) will be issued in due course, subject to prescriptions concerning national security, and the date shown on this Acknowledgement Receipt will establish the international filing date of the application.

PATENT

Practitioner's Docket No. 982-010567-US (C01)

IN THE UNITED STATES PATENT AND TRADEMARK OFFICE

Patent Number: US 7,280,599 B2

Issued: October 9, 2007

Name of Patentee: Karczewicz et al.

Title: METHOD FOR SUB-PIXEL VALUE INTERPOLATION

Commissioner of Patents
P.O. Box 1450
Alexandria, VA 22313-1450

LETTER CALLING ATTENTION TO ERROR IN PATENT

It is respectfully requested that this letter, calling attention to the following error(s) in this patent, be made of record in the patent file:

In Column 46, line 22, in claim 1, delete "bounded rectangular" and insert --rectangular bounded--, therefor.

In Column 48, line 3, in claim 16, delete "0" and insert --zero--, therefor.

In Column 49, line 2, in claim 21, delete "with " and insert --within--, therefor.

In Column 50, line 16, in claim 22, delete "bounded rectangular" and insert --rectangular bounded--, therefor.

In Column 50, line 36, in claim 25, delete "23" and insert --26--, therefor.

In Column Column 52, line 17, in claim 39, delete "0" and insert --zero--, therefor.

SIGNATURE OF PRACTITIONER

Reg. No. 44,004

Geza C. Ziegler, Jr.
(type or print name of practitioner)

Tel. No. (203) 259-1800

PERMAN & GREEN, LLP
P.O. Address

Customer No.: 2512

425 Post Road, Fairfield, CT 06824

NOTE: Letters which merely call attention to errors in patents, with a request that the letter be made of record in the patented file, will not be acknowledged" MPEP § 1480.

(Letter Calling Attention to Error in Patent [14-4)

11/090717

C of C

OIPE IAP10
OCT 29 2007
PATENT & TRADEMARK OFFICE

PATENT

Practitioner's Docket No. 982-010567-US (C01)

IN THE UNITED STATES PATENT AND TRADEMARK OFFICE

Patent Number: US 7,280,599 B2

Issued: October 9, 2007

Name of Patentee: Karczewicz et al.

Title: METHOD FOR SUB-PIXEL VALUE INTERPOLATION

Certificate
NOV 09 2007
of Correction

Commissioner of Patents
P.O. Box 1450
Alexandria, VA 22313-1450

LETTER CALLING ATTENTION TO ERROR IN PATENT

It is respectfully requested that this letter, calling attention to the following error(s) in this patent, be made of record in the patent file:

In column 46, line 39, in claim 3, delete "second" and insert --and--, therefor.

In column 47, line 47, in claim 12, delete "2_N" and insert –2^N.--, therefor.

In column 51, line 44, in claim 34, delete "zero" and insert --2^N. --, therefor.

In column 45, lines 57-58, in claim 1, delete "L equal zero" and insert –L equal to zero--, therefor.

In column 48, line 43, in claim 20, delete "L equal zero" and insert –L equal to zero--, therefor.

In column 49, line 18, in claim 21, delete "L equal zero" and insert –L equal to zero--, therefor.

In column 49, line 64, in claim 22, delete "L equal zero" and insert –L equal to zero--, therefor.

In column 50, line 56, in claim 27, delete "claim **23**" and insert –claim **44**--, therefor.

In column 50, line 58, in claim 22, delete "claim **26**" and insert –claim **46**--, therefor.

SIGNATURE OF PRACTITIONER

Reg. No. 44,004

Geza C. Ziegler, Jr.
(type or print name of practitioner)

Tel. No. (203) 259-1800

PERMAN & GREEN, LLP
P.O. Address

Customer No.: 2512

425 Post Road, Fairfield, CT 06824

NOTE: Letters which merely call attention to errors in patents, with a request that the letter be made of record in the patented file, will not be acknowledged" MPEP § 1480.

(Letter Calling Attention to Error in Patent [14-4)

UNITED STATES PATENT AND TRADEMARK OFFICE

UNITED STATES DEPARTMENT OF COMMERCE
United States Patent and Trademark Office
Address: COMMISSIONER FOR PATENTS
P.O. Box 1450
Alexandria, Virginia 22313-1450
www.uspto.gov

APPLICATION NO.	ISSUE DATE	PATENT NO.	ATTORNEY DOCKET NO.	CONFIRMATION NO.
11/090,717	10/09/2007	7280599	442-010567-US (C01)	6454

7590 09/19/2007

Perman & Green
425 Post Road
Fairfield, CT 06430-6232

ISSUE NOTIFICATION

The projected patent number and issue date are specified above.

Determination of Patent Term Adjustment under 35 U.S.C. 154 (b)
(application filed on or after May 29, 2000)

The Patent Term Adjustment is 239 day(s). Any patent to issue from the above-identified application will include an indication of the adjustment on the front page.

If a Continued Prosecution Application (CPA) was filed in the above-identified application, the filing date that determines Patent Term Adjustment is the filing date of the most recent CPA.

Applicant will be able to obtain more detailed information by accessing the Patent Application Information Retrieval (PAIR) WEB site (http://pair.uspto.gov).

Any questions regarding the Patent Term Extension or Adjustment determination should be directed to the Office of Patent Legal Administration at (571)-272-7702. Questions relating to issue and publication fee payments should be directed to the Customer Service Center of the Office of Patent Publication at (571)-272-4200.

APPLICANT(s) (Please see PAIR WEB site http://pair.uspto.gov for additional applicants):

Marta Karczewicz, Irving, TX;
Antti Olli Hallapuro, Tampere, FINLAND;

Patent Owner's Exhibit 2003, p. 20
Amazon et al v. Nokia
IPR2024-01139

HD

UNITED STATES PATENT AND TRADEMARK OFFICE

UNITED STATES DEPARTMENT OF COMMERCE
United States Patent and Trademark Office
Address: COMMISSIONER FOR PATENTS
P.O. Box 1450
Alexandria, Virginia 22313-1450
www.uspto.gov

APPLICATION NO.	FILING DATE	FIRST NAMED INVENTOR	ATTORNEY DOCKET NO.	CONFIRMATION NO.
11/090,717	03/25/2005	Marta Karczewicz	442-010567-US (C01)	6454

7590 09/04/2007

Perman & Green
425 Post Road
Fairfield, CT 06430-6232

EXAMINER
AN, SHAWN S

ART UNIT	PAPER NUMBER
2621	

MAIL DATE	DELIVERY MODE
09/04/2007	PAPER

Please find below and/or attached an Office communication concerning this application or proceeding.

The time period for reply, if any, is set in the attached communication.

Response to Rule 312 Communication	Application No.	Applicant(s)	
	11/090,717	KARCZEWICZ ET AL.	
	Examiner	Art Unit	
	Shawn S. An	2621	

-- The MAILING DATE of this communication appears on the cover sheet with the correspondence address --

1. ☒ The amendment filed on *15 August 2007* under 37 CFR 1.312 has been considered, and has been:

a) ☒ entered.

b) ☐ entered as directed to matters of form not affecting the scope of the invention.

c) ☐ disapproved because the amendment was filed after the payment of the issue fee.
Any amendment filed after the date the issue fee is paid must be accompanied by a petition under 37 CFR 1.313(c)(1) and the required fee to withdraw the application from issue.

d) ☐ disapproved. See explanation below.

e) ☐ entered in part. See explanation below.

SHAWN AN
PRIMARY EXAMINER

Patent Owner's Exhibit 2003, p. 22
Amazon et al v. Nokia
IPR2024-01139

PART B - FEE(S) TRANSMITTAL

Complete and send this form, together with applicable fee(s), to: Mail **Mail Stop ISSUE FEE**
Commissioner for Patents
P.O. Box 1450
Alexandria, Virginia 22313-1450
or Fax (571)-273-2885

INSTRUCTIONS: This form should be used for transmitting the ISSUE FEE and PUBLICATION FEE (if required). Blocks 1 through 5 should be completed where appropriate. All further correspondence including the Patent, advance orders and notification of maintenance fees will be mailed to the current correspondence address as indicated unless corrected below or directed otherwise in Block 1, by (a) specifying a new correspondence address; and/or (b) indicating a separate "FEE ADDRESS" for maintenance fee notifications.

CURRENT CORRESPONDENCE ADDRESS (Note: Use Block 1 for any change of address)

7590 05/15/2007

Perman & Green
425 Post Road
Fairfield, CT 06430-6232

Note: A certificate of mailing can only be used for domestic mailings of the Fee(s) Transmittal. This certificate cannot be used for any other accompanying papers. Each additional paper, such as an assignment or formal drawing, must have its own certificate of mailing or transmission.

Certificate of Mailing or Transmission
I hereby certify that this Fee(s) Transmittal is being deposited with the United States Postal Service with sufficient postage for first class mail in an envelope addressed to the Mail Stop ISSUE FEE address above, or being facsimile transmitted to the USPTO (571) 273-2885, on the date indicated below.

(Depositor's name)
(Signature)
(Date)

APPLICATION NO.	FILING DATE	FIRST NAMED INVENTOR	ATTORNEY DOCKET NO.	CONFIRMATION NO.
11/090,717	03/25/2005	Marta Karczewicz	442-010567-US (C01)	6454

TITLE OF INVENTION: METHOD FOR SUB-PIXEL VALUE INTERPOLATION

APPLN. TYPE	SMALL ENTITY	ISSUE FEE DUE	PUBLICATION FEE DUE	PREV. PAID ISSUE FEE	TOTAL FEE(S) DUE	DATE DUE
nonprovisional	NO	$1400	$300	$0	$1700	08/15/2007

EXAMINER	ART UNIT	CLASS-SUBCLASS
AN, SHAWN S	2621	375-240170

1. Change of correspondence address or indication of "Fee Address" (37 CFR 1.363).
☐ Change of correspondence address (or Change of Correspondence Address form PTO/SB/122) attached.
☐ "Fee Address" indication (or "Fee Address" Indication form PTO/SB/47; Rev 03-02 or more recent) attached. **Use of a Customer Number is required.**

2. For printing on the patent front page, list
(1) the names of up to 3 registered patent attorneys or agents OR, alternatively,
(2) the name of a single firm (having as a member a registered attorney or agent) and the names of up to 2 registered patent attorneys or agents. If no name is listed, no name will be printed.

1 _____
2 PERMAN & GREEN, LLP
3 _____

3. ASSIGNEE NAME AND RESIDENCE DATA TO BE PRINTED ON THE PATENT (print or type)

PLEASE NOTE: Unless an assignee is identified below, no assignee data will appear on the patent. If an assignee is identified below, the document has been filed for recordation as set forth in 37 CFR 3.11. Completion of this form is NOT a substitute for filing an assignment.

(A) NAME OF ASSIGNEE: NOKIA CORPORATION

(B) RESIDENCE: (CITY and STATE OR COUNTRY): Espoo, Finland

Please check the appropriate assignee category or categories (will not be printed on the patent): ☐ Individual XXX ☐ Corporation or other private group entity ☐ Government

4a. The following fee(s) are submitted:
XX ☐ Issue Fee
XX ☐ Publication Fee (No small entity discount permitted)
☐ Advance Order - # of Copies _____

4b. Payment of Fee(s): **(Please first reapply any previously paid issue fee shown above)**
☐ A check is enclosed.
☐ Payment by credit card. Form PTO-2038 is attached.
☒ The Director is hereby authorized to charge the required fee(s), any deficiency, or credit any overpayment, to Deposit Account Number 16-1350 (enclose an extra copy of this form).

5. **Change in Entity Status** (from status indicated above)
☐ a. Applicant claims SMALL ENTITY status. See 37 CFR 1.27. ☐ b. Applicant is no longer claiming SMALL ENTITY status. See 37 CFR 1.27(g)(2).

NOTE: The Issue Fee and Publication Fee (if required) will not be accepted from anyone other than the applicant; a registered attorney or agent; or the assignee or other party in interest as shown by the records of the United States Patent and Trademark Office.

Authorized Signature _____ Date 15 August 2007

Typed or printed name Geza C. Ziegler, Jr. Registration No. 44,004

This collection of information is required by 37 CFR 1.311. The information is required to obtain or retain a benefit by the public which is to file (and by the USPTO to process) an application. Confidentiality is governed by 35 U.S.C. 122 and 37 CFR 1.14. This collection is estimated to take 12 minutes to complete, including gathering, preparing, and submitting the completed application form to the USPTO. Time will vary depending upon the individual case. Any comments on the amount of time you require to complete this form and/or suggestions for reducing this burden, should be sent to the Chief Information Officer, U.S. Patent and Trademark Office, U.S. Department of Commerce, P.O. Box 1450, Alexandria, Virginia 22313-1450. DO NOT SEND FEES OR COMPLETED FORMS TO THIS ADDRESS. SEND TO: Commissioner for Patents, P.O. Box 1450, Alexandria, Virginia 22313-1450.

Under the Paperwork Reduction Act of 1995, no persons are required to respond to a collection of information unless it displays a valid OMB control number.

Patent Owner's Exhibit 2003, p. 23
Amazon et al v. Nokia
IPR2024-01139

Electronic Patent Application Fee Transmittal

Application Number:	11090717
Filing Date:	25-Mar-2005
Title of Invention:	METHOD FOR SUB-PIXEL VALUE INTERPOLATION
First Named Inventor/Applicant Name:	Marta Karczewicz
Filer:	GEZA C ZIEGLER JR/Shannon D'Amico
Attorney Docket Number:	442-010567-US (C01)

Filed as Large Entity

Utility Filing Fees

Description	Fee Code	Quantity	Amount	Sub-Total in USD($)
Basic Filing:				
Pages:				
Claims:				
Miscellaneous-Filing:				
Petition:				
Patent-Appeals-and-Interference:				
Post-Allowance-and-Post-Issuance:				
Utility Appl issue fee	1501	1	1400	1400
Publ. Fee- early, voluntary, or normal	1504	1	300	300

Description	Fee Code	Quantity	Amount	Sub-Total in USD($)
Extension-of-Time:				
Miscellaneous:				
			Total in USD ($)	**1700**

Electronic Acknowledgement Receipt

EFS ID:	2086695
Application Number:	11090717
International Application Number:	
Confirmation Number:	6454
Title of Invention:	METHOD FOR SUB-PIXEL VALUE INTERPOLATION
First Named Inventor/Applicant Name:	Marta Karczewicz
Correspondence Address:	Perman & Green - 425 Post Road - Fairfield CT 06430-6232 US 2032591800 -
Filer:	GEZA C ZIEGLER JR/Shannon D'Amico
Filer Authorized By:	GEZA C ZIEGLER JR
Attorney Docket Number:	442-010567-US (C01)
Receipt Date:	15-AUG-2007
Filing Date:	25-MAR-2005
Time Stamp:	16:02:58
Application Type:	Utility under 35 USC 111(a)

Payment information:

Submitted with Payment	yes
Payment was successfully received in RAM	$1700
RAM confirmation Number	1130

Patent Owner's Exhibit 2003, p. 26
Amazon et al v. Nokia
IPR2024-01139

Deposit Account	161350
The Director of the USPTO is hereby authorized to charge indicated fees and credit any overpayment as follows: Charge any Additional Fees required under 37 C.F.R. Section 1.16 and 1.17	

File Listing:

Document Number	Document Description	File Name	File Size(Bytes) /Message Digest	Multi Part /.zip	Pages (if appl.)
1		312Amendment.pdf	598578 878a4e1ce85f70ca49d98f6b6ba05a614f447394	yes	18
	Multipart Description/PDF files in .zip description				
	Document Description		**Start**	**End**	
	Amendment after Notice of Allowance (Rule 312)		1	1	
	Claims		2	16	
	Applicant Arguments/Remarks Made in an Amendment		17	18	
Warnings:					
Information:					
2	Issue Fee Payment (PTO-85B)	IssueFeeTransmittal.pdf	91778 73a74f7dfd53467ba1caaa5864c8ce98da325201	no	1
Warnings:					
Information:					
3	Fee Worksheet (PTO-06)	fee-info.pdf	8308 2f3ca0e6751696650ff8e4b2936e9ad0d84d5917	no	2
Warnings:					
Information:					
		Total Files Size (in bytes):	698664		

This Acknowledgement Receipt evidences receipt on the noted date by the USPTO of the indicated documents, characterized by the applicant, and including page counts, where applicable. It serves as evidence of receipt similar to a Post Card, as described in MPEP 503.

New Applications Under 35 U.S.C. 111
If a new application is being filed and the application includes the necessary components for a filing date (see 37 CFR 1.53(b)-(d) and MPEP 506), a Filing Receipt (37 CFR 1.54) will be issued in due course and the date shown on this Acknowledgement Receipt will establish the filing date of the application.

National Stage of an International Application under 35 U.S.C. 371
If a timely submission to enter the national stage of an international application is compliant with the conditions of 35 U.S.C. 371 and other applicable requirements a Form PCT/DO/EO/903 indicating acceptance of the application as a national stage submission under 35 U.S.C. 371 will be issued in addition to the Filing Receipt, in due course.

New International Application Filed with the USPTO as a Receiving Office
If a new international application is being filed and the international application includes the necessary components for an international filing date (see PCT Article 11 and MPEP 1810), a Notification of the International Application Number and of the International Filing Date (Form PCT/RO/105) will be issued in due course, subject to prescriptions concerning national security, and the date shown on this Acknowledgement Receipt will establish the international filing date of the application.

IN THE UNITED STATES PATENT AND TRADEMARK OFFICE

APPLICANT(s):	Karczewicz et al.	CONF. NO.	6454
SERIAL NO.:	11/090,717	ART UNIT:	2621
FILING DATE:	Herewith	EXAMINER:	An, Shawn S
TITLE:	METHOD FOR SUB-PIXEL VALUE INTERPOLATION		
ATTORNEY DOCKET NO.:	982-010567-US (C01)		

MAIL STOP ISSUE
Commissioner of Patents
P.O. Box 1450
Alexandria, VA 22313-1450

AMENDMENT UNDER 37 CFR 1.312

I. INTRODUCTION

This Amendment is being submitted with the payment of the Issue Fee. It is respectfully requested that the following amendments be made to the Application:

II. CLAIM AMENDMENTS

1-49 (Cancelled)

50. (Previously Presented) A method for sub-pixel value interpolation to determine values for sub-pixels situated within a rectangular bounded region defined by four corner pixels with no intermediate pixels between the corners, the pixels and sub-pixels being arranged in rows and columns, the pixel and sub-pixel locations being representable mathematically within the rectangular bounded region using the co-ordinate notation $K/2^N$, $L/2^N$, K and L being positive integers having respective values between zero and 2^N, N being a positive integer greater than one and representing a particular degree of sub-pixel value interpolation, the method comprising:

interpolating a sub-pixel value for a sub-pixel having co-ordinates with odd values of both K and L, according to a predetermined choice of a weighted average of the value of a nearest-neighbouring pixel and the value of the sub-pixel situated at co-ordinates 1/2, 1/2, and a weighted average of the values of a pair of diagonally-opposed sub-pixels having co-ordinates with even values of both K and L, including zero, situated within a quadrant of the rectangular bounded region defined by corner pixels having co-ordinates 1/2, 1/2 and the nearest neighbouring pixel;

interpolating sub-pixel values for sub-pixels having co-ordinates with K equal to an even value and L equal zero and sub-pixels having co-ordinates with K equal to zero and L equal to an even value, used in the interpolation of the sub-pixels having co-ordinates with odd values of both K and L, using weighted sums of the values of pixels located in rows and columns respectively; and

Patent Owner's Exhibit 2003, p. 30
Amazon et al v. Nokia
IPR2024-01139

interpolating sub-pixel values for sub-pixels having co-ordinates with even values of both K and L, used in the interpolation of sub-pixel values for the sub-pixels having co-ordinates with odd values of both K and L, using a predetermined choice of either a weighted sum of the values of sub-pixels having co-ordinates with K equal to an even value and L equal to zero and the values of sub-pixels having corresponding co-ordinates in immediately adjacent rectangular bounded regions, or a weighted sum of the values of sub-pixels having co-ordinates with K equal to zero and L equal to an even value and the values of sub-pixels having corresponding co-ordinates in immediately adjacent bounded rectangular regions.

51. (Previously Presented) A method according to claim 50, comprising using a first and a second weight in the weighted average chosen to interpolate the sub-pixel value for a sub-pixel having co-ordinates with odd values of both K and L, wherein when the chosen weighted average is that involving the value of a nearest neighbouring pixel and the value of the sub-pixel situated at co-ordinates 1/2, 1/2, selecting the relative magnitudes of the first and second weights to be inversely proportional to the respective straight-line diagonal distances of the nearest-neighbouring pixel and the sub-pixel situated at co-ordinates 1/2, 1/2 to the sub-pixel having co-ordinates with odd values of both K and L whose value is being interpolated.

52. (Previously Presented) A method according to claim 50, comprising using a first and a second weight in the weighted average chosen to interpolate the sub-pixel value for a sub-pixel having co-ordinates with odd values of both K and L, wherein when the chosen weighted average is that involving the values of a pair of diagonally-opposed sub-pixels having co-ordinates with even values of both K and L, selecting the relative magnitudes of the first and second weights to be inversely proportional to the respective straight-line diagonal distances of the sub-pixels having co-ordinates with even values of

Patent Owner's Exhibit 2003, p. 31
Amazon et al v. Nokia
IPR2024-01139

both K and L to the sub-pixel having co-ordinates with odd values of both K and L whose value is being interpolated.

53. (Currently Amended) A method according to claim 51, comprising using first and second weights with equal values when the nearest-neighbouring pixel and ~~second~~ sub-pixel situated at co-ordinates 1/2, 1/2 are equidistant from the sub-pixel having co-ordinates with odd values of both K and L whose value is being interpolated.

54. (Previously Presented) A method according to claim 52, comprising using first and second weights with equal values when the sub-pixels having co-ordinates with even values of both K and L are equidistant from the sub-pixel having co-ordinates with odd values of both K and L whose value is being interpolated.

55. (Previously Presented) A method according to claim 50, comprising interpolating sub-pixel values for sub-pixels having co-ordinates with even values of both K and L, used in interpolation of sub-pixel values for the sub-pixels having co-ordinates with odd values of both K and L, using a weighted sum of the values of sub-pixels having co-ordinates with K equal to an even value and L equal to zero and the values of sub-pixels having corresponding co-ordinates in immediately adjacent rectangular bounded regions when the value of a sub-pixel having co-ordinates with K equal to an even value and L equal to an odd value is also required.

56. (Previously Presented) A method according to claim 50, comprising interpolating sub-pixel values for sub-pixels having co-ordinates with even values of both K and L, used in interpolation of sub-pixel values for the sub-pixels having co-ordinates with odd values of both K and L, using a weighted sum of the values of sub-pixels having co-

Patent Owner's Exhibit 2003, p. 32
Amazon et al v. Nokia
IPR2024-01139

ordinates with K equal to zero and L equal to an even value and the values of sub-pixels having corresponding co-ordinates in immediately adjacent rectangular bounded regions when the value of a sub-pixel having co-ordinates with K equal to an odd value and L equal to an even value is also required.

57. (Previously Presented) A method according to claim 50, comprising interpolating sub-pixel values for sub-pixels having co-ordinates with K equal to an odd value O and L equal to an even value E, not including zero or 2^N, by taking an average of the value of a first sub-pixel having co-ordinates with K equal to the even value O - 1 and L equal to E and a second sub-pixel having co-ordinates with K equal to the even value O + 1 and L equal to E.

58. (Previously Presented) A method according to claim 50, comprising interpolating a sub-pixel value for a sub-pixel having co-ordinates with K equal to 1 and L equal to zero, by taking an average of the value of a pixel having co-ordinates with K equal to zero and L equal to zero, and a sub-pixel having co-ordinates with K equal to 2 and L equal to zero.

59. (Previously Presented) A method according to claim 50, comprising interpolating a sub-pixel value for a sub-pixel having co-ordinates with K equal to 2^N - 1 and L equal to zero, by taking an average of the value of a pixel having co-ordinates with K equal to 2^N and L equal to zero, and a sub-pixel having co-ordinates with K equal to 2^N - 2 and L equal to zero.

60. (Previously Presented) A method according to claim 50, comprising interpolating a sub-pixel value for a sub-pixel having co-ordinates with K equal to 1 and L equal to 2^N,

Patent Owner's Exhibit 2003, p. 33
Amazon et al v. Nokia
IPR2024-01139

by taking an average of the value of a pixel having co-ordinates with K equal to zero and L equal to 2^N, and a sub-pixel having co-ordinates with K equal to 2 and L equal to 2^N.

61. (Currently Amended) A method according to claim 50, comprising interpolating a sub-pixel value for a sub-pixel having co-ordinates with K equal to $2^N - 1$ and L equal to 2^N, by taking an average of the value of a pixel having co-ordinates with K equal to 2^N and L equal to 2^N, and a sub-pixel having co-ordinates with K equal to $2^N - 2$ and L equal to ~~N~~ $\underline{2^N}$.

62. (Previously Presented) A method according to claim 50, comprising interpolating sub-pixel values for sub-pixels having co-ordinates with K equal to an even value E, not including zero or 2^N, and L equal to an odd value O, by taking an average of the value of a first sub-pixel having co-ordinates with K equal to E and L equal to the even value O - 1 and a second sub-pixel having co-ordinates with K equal to E and L equal to the even value O + 1.

63. (Previously Presented) A method according to claim 50, comprising interpolating a sub-pixel value for a sub-pixel having co-ordinates with K equal to zero and L equal to 1, by taking an average of the value of a pixel having co-ordinates with K equal to zero and L equal to zero, and a sub-pixel having co-ordinates with K equal to zero and L equal to 2.

64. (Previously Presented) A method according to claim 50, comprising interpolating a sub-pixel value for a sub-pixel having co-ordinates with K equal to 2^N and L equal to 1, by taking an average of the value of a pixel having co-ordinates with K equal to 2^N and L equal to zero, and a sub-pixel having co-ordinates with K equal to zero and L equal to 2.

Patent Owner's Exhibit 2003, p. 34
Amazon et al v. Nokia
IPR2024-01139

65. (Previously Presented) A method according to claim 50, comprising interpolating a sub-pixel value for a sub-pixel having co-ordinates with K equal to 0 and L equal to 2^N - 1, by taking an average of the value of a pixel having co-ordinates with K equal to zero and L equal to 2^N, and a sub-pixel having co-ordinates with K equal to zero and L equal to 2^N - 2.

66. (Previously Presented) A method according to claim 50, comprising interpolating a sub-pixel value for a sub-pixel having co-ordinates with K equal to 2^N and L equal to 2^N - 1, by taking an average of the value of a pixel having co-ordinates with K equal to 2^N and L equal to 2^N, and a sub-pixel having co-ordinates with K equal to 2^N and L equal to 2^N - 2.

67. (Previously Presented) A method according to claim 50, comprising interpolating a sub-pixel value for the sub-pixel having co-ordinates with K equal to 2^N - 1 and L equal to 2^N - 1, by taking a weighted average of the values of the four corner pixels that define the rectangular bounded region.

68. (Previously Presented) A method according to claim 50, comprising selecting a value for N from a list consisting of the values 2, 3, and 4.

69. (Previously Presented) A method for quarter resolution sub-pixel value interpolation to determine values for sub-pixels situated within a rectangular bounded region defined by four corner pixels with no intermediate pixels between the corners, the pixels and sub-pixels being arranged in rows and columns, the pixel and sub-pixel locations being representable mathematically within the rectangular bounded region using the co-ordinate notation K/4, L/4, K and L being positive integers having respective values between zero and 4, the method comprising:

Patent Owner's Exhibit 2003, p. 35
Amazon et al v. Nokia
IPR2024-01139

interpolating a sub-pixel value for a sub-pixel having co-ordinates with both K and L equal to 1 or 3, according to a predetermined choice of a weighted average of the value of a nearest-neighbouring pixel and the value of the sub-pixel situated at co-ordinates 2/4, 2/4, and a weighted average of the values of a pair of diagonally-opposed sub-pixels having co-ordinates with both K and L equal to zero, 2 or 4, situated within a quadrant of the rectangular bounded region defined by corner pixels having co-ordinates 2/4, 2/4 and the nearest neighbouring pixel;

interpolating sub-pixel values for sub-pixels having co-ordinates with K equal to 2 and L equal zero and sub-pixels having co-ordinates with K equal to zero and L equal to 2, used in the interpolation of the sub-pixels having co-ordinates with both K and L equal to 1 or 3, using weighted sums of the values of pixels located in rows and columns respectively; and

interpolating a sub-pixel value for the sub-pixel having co-ordinates with both K and L equal to 2, used in the interpolation of sub-pixel values for the sub-pixels having co-ordinates with both K and L equal to 1 or 3, using a predetermined choice of either a weighted sum of the values of the sub-pixel having co-ordinates with K equal to 2 and L equal to zero and the values of sub-pixels having corresponding co-ordinates in immediately adjacent rectangular bounded regions, or a weighted sum of the value of the sub-pixel having co-ordinates with K equal to zero and L equal to 2 and the values of sub-pixels having corresponding co-ordinates in immediately adjacent rectangular bounded regions.

70. (Previously Presented) A method for eighth resolution sub-pixel value interpolation to determine values for sub-pixels situated within a rectangular bounded region defined by four corner pixels with no intermediate pixels between the corners, the pixels and sub-pixels being arranged in rows and columns, the pixel and sub-pixel locations being representable mathematically with the rectangular bounded region using the co-ordinate

Patent Owner's Exhibit 2003, p. 36
Amazon et al v. Nokia
IPR2024-01139

notation K/8, L/8, K and L being positive integers having respective values between zero and 8, the method comprising:

interpolating a sub-pixel value for a sub-pixel having co-ordinates with both K and L equal to 1, 3, 5 or 7, according to a predetermined choice of a weighted average of the value of a nearest-neighbouring pixel and the value of the sub-pixel situated at co-ordinates 4/8, 4/8, and a weighted average of the values of a pair of diagonally-opposed sub-pixels having co-ordinates with both K and L equal to zero, 2, 4, 6 or 8, situated within a quadrant of the rectangular bounded region defined by corner pixels having co-ordinates 4/8, 4/8 and the nearest neighbouring pixel;

interpolating sub-pixel values for sub-pixels having co-ordinates with K equal to 2, 4 or 6 and L equal zero and sub-pixels having co-ordinates with K equal to zero and L equal to 2, 4 or 6, used in the interpolation of the sub-pixels having co-ordinates with both K and L equal to 1, 3, 5 or 7, using weighted sums of the values of pixels located in rows and columns respectively; and

interpolating sub-pixel values for sub-pixels having co-ordinates with both K and L equal to 2, 4 or 6, used in the interpolation of sub-pixel values for the sub-pixels having co-ordinates with both K and L equal to 1, 3, 5 or 7, using a predetermined choice of either a weighted sum of the values of sub-pixels having co-ordinates with K equal to 2, 4 or 6 and L equal to zero and the values of sub-pixels having corresponding co-ordinates in immediately adjacent rectangular bounded regions or a weighted sum of the values of sub-pixels having co-ordinates with K equal to zero and L equal to 2, 4 or 6 and the values of sub-pixels having corresponding co-ordinates in immediately adjacent rectangular bounded regions.

Patent Owner's Exhibit 2003, p. 37
Amazon et al v. Nokia
IPR2024-01139

71. (Previously Presented) An apparatus for sub-pixel value interpolation, the apparatus being operable to determine values for sub-pixels situated within a rectangular bounded region defined by four corner pixels with no intermediate pixels between the corners, the pixels and sub-pixels being arranged in rows and columns, the pixel and sub-pixel locations being representable mathematically within the rectangular bounded region using the co-ordinate notation $K/2^N$, $L/2^N$, K and L being positive integers having respective values between zero and 2^N, N being a positive integer greater than one and representing a particular degree of sub-pixel value interpolation, the apparatus comprising:

circuitry operable to interpolate a sub-pixel value for a sub-pixel having co-ordinates with odd values of both K and L, according to a predetermined choice of a weighted average of the value of a nearest-neighbouring pixel and the value of the sub-pixel situated at co-ordinates 1/2, 1/2, and a weighted average of the values of a pair of diagonally-opposed sub-pixels having co-ordinates with even values of both K and L, including zero, situated within a quadrant of the rectangular bounded region defined by corner pixels having co-ordinates 1/2, 1/2 and the nearest neighbouring pixel;

circuitry operable to interpolate sub-pixel values for sub-pixels having co-ordinates with K equal to an even value and L equal zero and sub-pixels having co-ordinates with K equal to zero and L equal to an even value, used in the interpolation of the sub-pixels having co-ordinates with odd values of both K and L, using weighted sums of the values of pixels located in rows and columns respectively; and

circuitry operable to interpolate sub-pixel values for sub-pixels having co-ordinates with even values of both K and L, used in the interpolation of sub-pixel values for the sub-pixels having co-ordinates with odd values of both K and L, using a predetermined choice of either a weighted sum of the values of sub-pixels having

Patent Owner's Exhibit 2003, p. 38
Amazon et al v. Nokia
IPR2024-01139

co-ordinates with K equal to an even value and L equal to zero and the values of sub-pixels having corresponding co-ordinates in immediately adjacent rectangular bounded regions, or a weighted sum of the values of sub-pixels having co-ordinates with K equal to zero and L equal to an even value and the values of sub-pixels having corresponding co-ordinates in immediately adjacent bounded rectangular regions.

72. (Previously Presented) An apparatus according to claim 71, wherein the apparatus is operable to use a first and a second weight in the weighted average chosen to interpolate the sub-pixel value for a sub-pixel having co-ordinates with odd values of both K and L, wherein when the chosen weighted average is that involving the value of a nearest neighbouring pixel and the value of the sub-pixel situated at co-ordinates 1/2, 1/2, the apparatus is operable to select the relative magnitudes of the first and second weights to be inversely proportional to the respective straight-line diagonal distances of the nearest-neighbouring pixel and the sub-pixel situated at co-ordinates 1/2, 1/2 to the sub-pixel having co-ordinates with odd values of both K and L whose value is being interpolated.

73. (Previously Presented) An apparatus according to claim 71, wherein the apparatus is operable to use a first and a second weight in the weighted average chosen to interpolate the sub-pixel value for a sub-pixel having co-ordinates with odd values of both K and L, wherein when the chosen weighted average is that involving the values of a pair of diagonally-opposed sub-pixels having co-ordinates with even values of both K and L, the apparatus is operable to select the relative magnitudes of the first and second weights to be inversely proportional to the respective straight-line diagonal distances of the sub-pixels having co-ordinates with even values of both K and L to the sub-pixel having co-ordinates with odd values of both K and L whose value is being interpolated.

Patent Owner's Exhibit 2003, p. 39
Amazon et al v. Nokia
IPR2024-01139

74. (Currently Amended) An apparatus according to claim 72, wherein the apparatus is operable to use first and second weights with equal values when the nearest-neighbouring pixel and ~~second~~ sub-pixel situated at co-ordinates 1/2, 1/2 are equidistant from the sub-pixel having co-ordinates with odd values of both K and L whose value is being interpolated.

75. (Previously Presented) An apparatus according to claim 72, wherein the apparatus is operable to use first and second weights with equal values when the sub-pixels having co-ordinates with even values of both K and L are equidistant from the sub-pixel having co-ordinates with odd values of both K and L whose value is being interpolated.

76. (Previously Presented) An apparatus according to claim 71, wherein the apparatus is operable to interpolate sub-pixel values for sub-pixels having co-ordinates with even values of both K and L, used in interpolation of sub-pixel values for the sub-pixels having co-ordinates with odd values of both K and L, using a weighted sum of the values of sub-pixels having co-ordinates with K equal to an even value and L equal to zero and the values of sub-pixels having corresponding co-ordinates in immediately adjacent rectangular bounded regions when the value of a sub-pixel having co-ordinates with K equal to an even value and L equal to an odd value is also required.

77. (Previously Presented) An apparatus according to claim 71, wherein the apparatus is operable to interpolate sub-pixel values for sub-pixels having co-ordinates with even values of both K and L, used in interpolation of sub-pixel values for the sub-pixels having co-ordinates with odd values of both K and L, using a weighted sum of the values of sub-pixels having co-ordinates with K equal to zero and L equal to an even value and the values of sub-pixels having corresponding co-ordinates in immediately adjacent rectangular bounded regions when the value of a sub-pixel having co-ordinates with K equal to an odd value and L equal to an even value is also required.

Patent Owner's Exhibit 2003, p. 40
Amazon et al v. Nokia
IPR2024-01139

78. (Previously Presented) An apparatus according to claim 71, wherein the apparatus is operable to interpolate sub-pixel values for sub-pixels having co-ordinates with K equal to an odd value O and L equal to an even value E, not including zero or 2^N, by taking an average of the value of a first sub-pixel having co-ordinates with K equal to the even value O - 1 and L equal to E and a second sub-pixel having co-ordinates with K equal to the even value O + 1 and L equal to E.

79. (Previously Presented) An apparatus according to claim 71, wherein the apparatus is operable to interpolate a sub-pixel value for a sub-pixel having co-ordinates with K equal to 1 and L equal to zero, by taking an average of the value of a pixel having co-ordinates with K equal to zero and L equal to zero, and a sub-pixel having co-ordinates with K equal to 2 and L equal to zero.

80. (Previously Presented) An apparatus according to claim 71, wherein the apparatus is operable to interpolate a sub-pixel value for a sub-pixel having co-ordinates with K equal to 2^N - 1 and L equal to zero, by taking an average of the value of a pixel having co-ordinates with K equal to 2^N and L equal to zero, and a sub-pixel having co-ordinates with K equal to 2^N - 2 and L equal to zero.

81. (Previously Presented) An apparatus according to claim 71, wherein the apparatus is operable to interpolate a sub-pixel value for a sub-pixel having co-ordinates with K equal to 1 and L equal to 2^N, by taking an average of the value of a pixel having co-ordinates with K equal to zero and L equal to 2^N, and a sub-pixel having co-ordinates with K equal to 2 and L equal to 2^N.

82. (Currently Amended) An apparatus according to claim 71, wherein the apparatus is operable to interpolate a sub-pixel value for a sub-pixel having co-ordinates with K

Patent Owner's Exhibit 2003, p. 41
Amazon et al v. Nokia
IPR2024-01139

equal to 2^N - 1 and L equal to 2^N, by taking an average of the value of a pixel having co-ordinates with K equal to 2^N and L equal to 2^N, and a sub-pixel having co-ordinates with K equal to 2^N - 2 and L equal to ~~N~~ $\underline{2^N}$.

83. (Previously Presented) An apparatus according to claim 71, wherein the apparatus is operable to interpolate sub-pixel values for sub-pixels having co-ordinates with K equal to an even value E, not including zero or 2^N, and L equal to an odd value O, by taking an average of the value of a first sub-pixel having co-ordinates with K equal to E and L equal to the even value O - 1 and a second sub-pixel having co-ordinates with K equal to E and L equal to the even value O + 1.

84. (Previously Presented) An apparatus according to claim 71, wherein the apparatus is operable to interpolate a sub-pixel value for a sub-pixel having co-ordinates with K equal to zero and L equal to 1, by taking an average of the value of a pixel having co-ordinates with K equal to zero and L equal to zero, and a sub-pixel having co-ordinates with K equal to zero and L equal to 2.

85. (Previously Presented) An apparatus according to claim 71, wherein the apparatus is operable to interpolate a sub-pixel value for a sub-pixel having co-ordinates with K equal to 2^N and L equal to 1, by taking an average of the value of a pixel having co-ordinates with K equal to 2^N and L equal to zero, and a sub-pixel having co-ordinates with K equal to zero and L equal to 2.

86. (Previously Presented) An apparatus according to claim 71, wherein the apparatus is operable to interpolate a sub-pixel value for a sub-pixel having co-ordinates with K equal to 0 and L equal to 2^N - 1, by taking an average of the value of a pixel having co-

Patent Owner's Exhibit 2003, p. 42
Amazon et al v. Nokia
IPR2024-01139

ordinates with K equal to zero and L equal to 2^N, and a sub-pixel having co-ordinates with K equal to zero and L equal to $2^N - 2$.

87. (Previously Presented) An apparatus according to claim 71, wherein the apparatus is operable to interpolate a sub-pixel value for a sub-pixel having co-ordinates with K equal to 2^N and L equal to $2^N - 1$, by taking an average of the value of a pixel having co-ordinates with K equal to 2^N and L equal to 2^N, and a sub-pixel having co-ordinates with K equal to 2^N and L equal to $2^N - 2$.

88. (Previously Presented) An apparatus according to claim 71, wherein the apparatus is operable to interpolate a sub-pixel value for the sub-pixel having co-ordinates with K equal to $2^N - 1$ and L equal to $2^N - 1$, by taking a weighted average of the values of the four corner pixels that define the rectangular bounded region.

89. (Previously Presented) An apparatus according to claim 71, wherein N is set equal to 2.

90. (Previously Presented) An apparatus according to claim 71, wherein N is set equal to 3.

91. (Previously Presented) A video encoder comprising an apparatus for sub-pixel value interpolation according to claim 71.

92. (Previously Presented) A still image encoder comprising an apparatus for sub-pixel value interpolation according to claim 71.

Patent Owner's Exhibit 2003, p. 43
Amazon et al v. Nokia
IPR2024-01139

93. (Previously Presented) A video decoder comprising an apparatus for sub-pixel value interpolation according to claim 71.

94. (Previously Presented) A still image decoder comprising an apparatus for sub-pixel value interpolation according to claim 71.

95. (Currently Amended) A codec comprising a video encoder according to claim ~~72~~ 91 and a video decoder according to claim ~~73~~ 93.

96. (Currently Amended) A codec comprising a still image encoder according to claim ~~93~~ 92 and a still image decoder according to claim 94.

97. (Currently Amended) A communications terminal comprising a video encoder according to claim ~~72~~ 91.

98. (Currently Amended) A communications terminal comprising a still image encoder according to claim ~~93~~ 92.

99. (Currently Amended) A communications terminal comprising a video decoder according to claim ~~73~~ 93.

100. (Currently Amended) A communications terminal comprising a still image decoder according to claim ~~95~~ 94.

Patent Owner's Exhibit 2003, p. 44
Amazon et al v. Nokia
IPR2024-01139

III. REMARKS

1. Claims 53, 61, 74 and 82 are amended to correct antecedent basis and grammatical errors.

In claims 53 and 74 there is no antecedent basis for "second" sub-pixel.

In claims 61 and 82 "N" should be "2^N".

Claims 95-100 are amended to reflect the proper claim dependencies.

These amendments are needed for proper protection of the claimed subject matter and require no substantial amount of additional work on the part of the United States Patent and Trademark Office.

No matter is being introduced in the claims.

The Commissioner is hereby authorized to charge for payment of any fees associated with this communication or credit any over payment to Deposit Account No. 16-1350.

Respectfully submitted,

Geza C. Ziegler, Jr.
Reg. No. 44,004

15 August 2007
Date

PERMAN & GREEN, LLP
425 Post Road
Fairfield, CT 06824
(203) 259-1800
Customer No.: 2512

Patent Owner's Exhibit 2003, p. 45
Amazon et al v. Nokia
IPR2024-01139

CERTIFICATE OF ELECTRONIC FILING

I hereby certify that this correspondence is being transmitted electronically on the date indicated below addressed to the Mail Stop ISSUE FEE, Commissioner of Patents, P.O. Box 1450, Alexandria, VA 22313-1450.

Date: 15 August 2007 Signature: Shannon D'Amico

Shannon D'Amico

Patent Owner's Exhibit 2003, p. 46
Amazon et al v. Nokia
IPR2024-01139

Figure 13a shows a notation for describing pixel and sub-pixel locations specific to TML6;

Figure 13b shows interpolation of a half resolution sub-pixels;

Figure 13c shows interpolation of a half resolution sub-pixels;

fgm 5/30/07

Figure 14a shows a notation for describing pixel and sub-pixel locations specific to the invention;

Figure 14b shows interpolation of a half resolution sub-pixels according to the invention;

Figure 14c shows interpolation of a half resolution sub-pixels according to the invention;

Figure 15 shows possible choices of diagonal interpolation for sub-pixels;

Figure 16 shows the half resolution sub-pixel values required to calculate other half resolution sub-pixel values;

Figure 17a shows the half resolution sub-pixel values that must be calculated in order to interpolate values for quarter resolution sub-pixels in an image block using the interpolation method of TML5;

Figure 17b shows the half resolution sub-pixel values that must be calculated in order to interpolate values for quarter resolution sub-pixels in an image block using the interpolation method according to the invention;

Figures 18a shows the numbers of half resolution sub-pixels that must be calculated in order to obtain values for quarter resolution sub-pixels within an image block using the sub-pixel value interpolation method according to TML5;

Figure 18b shows the numbers of half resolution sub-pixels that must be calculated in order to obtain values for quarter resolution sub-pixels within an image block using the sub-pixel value interpolation method according to the invention;

Figure 19 shows a numbering scheme for each of the 15 sub-pixel positions;

Patent Owner's Exhibit 2003, p. 47
Amazon et al v. Nokia
IPR2024-01139

UNITED STATES PATENT AND TRADEMARK OFFICE

UNITED STATES DEPARTMENT OF COMMERCE
United States Patent and Trademark Office
Address: COMMISSIONER FOR PATENTS
P.O. Box 1450
Alexandria, Virginia 22313-1450
www.uspto.gov

NOTICE OF ALLOWANCE AND FEE(S) DUE

7590 05/15/2007

Perman & Green
425 Post Road
Fairfield, CT 06430-6232

EXAMINER
AN, SHAWN S

ART UNIT	PAPER NUMBER
2621	

DATE MAILED: 05/15/2007

APPLICATION NO.	FILING DATE	FIRST NAMED INVENTOR	ATTORNEY DOCKET NO.	CONFIRMATION NO.
11/090,717	03/25/2005	Marta Karczewicz	442-010567-US (C01)	6454

TITLE OF INVENTION: METHOD FOR SUB-PIXEL VALUE INTERPOLATION

APPLN. TYPE	SMALL ENTITY	ISSUE FEE DUE	PUBLICATION FEE DUE	PREV. PAID ISSUE FEE	TOTAL FEE(S) DUE	DATE DUE
nonprovisional	NO	$1400	$300	$0	$1700	08/15/2007

THE APPLICATION IDENTIFIED ABOVE HAS BEEN EXAMINED AND IS ALLOWED FOR ISSUANCE AS A PATENT. PROSECUTION ON THE MERITS IS CLOSED. THIS NOTICE OF ALLOWANCE IS NOT A GRANT OF PATENT RIGHTS. THIS APPLICATION IS SUBJECT TO WITHDRAWAL FROM ISSUE AT THE INITIATIVE OF THE OFFICE OR UPON PETITION BY THE APPLICANT. SEE 37 CFR 1.313 AND MPEP 1308.

THE ISSUE FEE AND PUBLICATION FEE (IF REQUIRED) MUST BE PAID WITHIN THREE MONTHS FROM THE MAILING DATE OF THIS NOTICE OR THIS APPLICATION SHALL BE REGARDED AS ABANDONED. THIS STATUTORY PERIOD CANNOT BE EXTENDED. SEE 35 U.S.C. 151. THE ISSUE FEE DUE INDICATED ABOVE DOES NOT REFLECT A CREDIT FOR ANY PREVIOUSLY PAID ISSUE FEE IN THIS APPLICATION. IF AN ISSUE FEE HAS PREVIOUSLY BEEN PAID IN THIS APPLICATION (AS SHOWN ABOVE), THE RETURN OF PART B OF THIS FORM WILL BE CONSIDERED A REQUEST TO REAPPLY THE PREVIOUSLY PAID ISSUE FEE TOWARD THE ISSUE FEE NOW DUE.

HOW TO REPLY TO THIS NOTICE:

I. Review the SMALL ENTITY status shown above.

If the SMALL ENTITY is shown as YES, verify your current SMALL ENTITY status:

A. If the status is the same, pay the TOTAL FEE(S) DUE shown above.

B. If the status above is to be removed, check box 5b on Part B - Fee(s) Transmittal and pay the PUBLICATION FEE (if required) and twice the amount of the ISSUE FEE shown above, or

If the SMALL ENTITY is shown as NO:

A. Pay TOTAL FEE(S) DUE shown above, or

B. If applicant claimed SMALL ENTITY status before, or is now claiming SMALL ENTITY status, check box 5a on Part B - Fee(s) Transmittal and pay the PUBLICATION FEE (if required) and 1/2 the ISSUE FEE shown above.

II. PART B - FEE(S) TRANSMITTAL, or its equivalent, must be completed and returned to the United States Patent and Trademark Office (USPTO) with your ISSUE FEE and PUBLICATION FEE (if required). If you are charging the fee(s) to your deposit account, section "4b" of Part B - Fee(s) Transmittal should be completed and an extra copy of the form should be submitted. If an equivalent of Part B is filed, a request to reapply a previously paid issue fee must be clearly made, and delays in processing may occur due to the difficulty in recognizing the paper as an equivalent of Part B.

III. All communications regarding this application must give the application number. Please direct all communications prior to issuance to Mail Stop ISSUE FEE unless advised to the contrary.

IMPORTANT REMINDER: Utility patents issuing on applications filed on or after Dec. 12, 1980 may require payment of maintenance fees. It is patentee's responsibility to ensure timely payment of maintenance fees when due.

Patent Owner's Exhibit 2003, p. 48
Amazon et al v. Nokia
IPR2024-01139

PTOL-85 (Rev. 07/06) Approved for use through 04/30/2007.

PART B - FEE(S) TRANSMITTAL

Complete and send this form, together with applicable fee(s), to: Mail **Mail Stop ISSUE FEE**
Commissioner for Patents
P.O. Box 1450
Alexandria, Virginia 22313-1450
or Fax (571)-273-2885

INSTRUCTIONS: This form should be used for transmitting the ISSUE FEE and PUBLICATION FEE (if required). Blocks 1 through 5 should be completed where appropriate. All further correspondence including the Patent, advance orders and notification of maintenance fees will be mailed to the current correspondence address as indicated unless corrected below or directed otherwise in Block 1, by (a) specifying a new correspondence address; and/or (b) indicating a separate "FEE ADDRESS" for maintenance fee notifications.

CURRENT CORRESPONDENCE ADDRESS (Note: Use Block 1 for any change of address)

7590 05/15/2007

Perman & Green
425 Post Road
Fairfield, CT 06430-6232

Note: A certificate of mailing can only be used for domestic mailings of the Fee(s) Transmittal. This certificate cannot be used for any other accompanying papers. Each additional paper, such as an assignment or formal drawing, must have its own certificate of mailing or transmission.

Certificate of Mailing or Transmission

I hereby certify that this Fee(s) Transmittal is being deposited with the United States Postal Service with sufficient postage for first class mail in an envelope addressed to the Mail Stop ISSUE FEE address above, or being facsimile transmitted to the USPTO (571) 273-2885, on the date indicated below.

(Depositor's name)

(Signature)

(Date)

APPLICATION NO.	FILING DATE	FIRST NAMED INVENTOR	ATTORNEY DOCKET NO.	CONFIRMATION NO.
11/090,717	03/25/2005	Marta Karczewicz	442-010567-US (C01)	6454

TITLE OF INVENTION: METHOD FOR SUB-PIXEL VALUE INTERPOLATION

APPLN. TYPE	SMALL ENTITY	ISSUE FEE DUE	PUBLICATION FEE DUE	PREV. PAID ISSUE FEE	TOTAL FEE(S) DUE	DATE DUE
nonprovisional	NO	$1400	$300	$0	$1700	08/15/2007

EXAMINER	ART UNIT	CLASS-SUBCLASS
AN, SHAWN S	2621	375-240170

1. Change of correspondence address or indication of "Fee Address" (37 CFR 1.363).

☐ Change of correspondence address (or Change of Correspondence Address form PTO/SB/122) attached.

☐ "Fee Address" indication (or "Fee Address" Indication form PTO/SB/47; Rev 03-02 or more recent) attached. **Use of a Customer Number is required.**

2. For printing on the patent front page, list

(1) the names of up to 3 registered patent attorneys or agents OR, alternatively,

(2) the name of a single firm (having as a member a registered attorney or agent) and the names of up to 2 registered patent attorneys or agents. If no name is listed, no name will be printed.

1_____

2_____

3_____

3. ASSIGNEE NAME AND RESIDENCE DATA TO BE PRINTED ON THE PATENT (print or type)

PLEASE NOTE: Unless an assignee is identified below, no assignee data will appear on the patent. If an assignee is identified below, the document has been filed for recordation as set forth in 37 CFR 3.11. Completion of this form is NOT a substitute for filing an assignment.

(A) NAME OF ASSIGNEE (B) RESIDENCE: (CITY and STATE OR COUNTRY)

Please check the appropriate assignee category or categories (will not be printed on the patent) : ☐ Individual ☐ Corporation or other private group entity ☐ Government

4a. The following fee(s) are submitted:

☐ Issue Fee

☐ Publication Fee (No small entity discount permitted)

☐ Advance Order - # of Copies _____

4b. Payment of Fee(s): **(Please first reapply any previously paid issue fee shown above)**

☐ A check is enclosed.

☐ Payment by credit card. Form PTO-2038 is attached.

☐ The Director is hereby authorized to charge the required fee(s), any deficiency, or credit any overpayment, to Deposit Account Number _____ (enclose an extra copy of this form).

5. **Change in Entity Status** (from status indicated above)

☐ a. Applicant claims SMALL ENTITY status. See 37 CFR 1.27.

☐ b. Applicant is no longer claiming SMALL ENTITY status. See 37 CFR 1.27(g)(2).

NOTE: The Issue Fee and Publication Fee (if required) will not be accepted from anyone other than the applicant; a registered attorney or agent; or the assignee or other party in interest as shown by the records of the United States Patent and Trademark Office.

Authorized Signature _____ Date _____

Typed or printed name _____ Registration No. _____

This collection of information is required by 37 CFR 1.311. The information is required to obtain or retain a benefit by the public which is to file (and by the USPTO to process) an application. Confidentiality is governed by 35 U.S.C. 122 and 37 CFR 1.14. This collection is estimated to take 12 minutes to complete, including gathering, preparing, and submitting the completed application form to the USPTO. Time will vary depending upon the individual case. Any comments on the amount of time you require to complete this form and/or suggestions for reducing this burden, should be sent to the Chief Information Officer, U.S. Patent and Trademark Office, U.S. Department of Commerce, P.O. Box 1450, Alexandria, Virginia 22313-1450. DO NOT SEND FEES OR COMPLETED FORMS TO THIS ADDRESS. SEND TO: Commissioner for Patents, P.O. Box 1450, Alexandria, Virginia 22313-1450.

Under the Paperwork Reduction Act of 1995, no persons are required to respond to a collection of information unless it displays a valid OMB control number.

Patent Owner's Exhibit 2003, p. 49
Amazon et al v. Nokia
IPR2024-01139

UNITED STATES PATENT AND TRADEMARK OFFICE

UNITED STATES DEPARTMENT OF COMMERCE
United States Patent and Trademark Office
Address: COMMISSIONER FOR PATENTS
P.O. Box 1450
Alexandria, Virginia 22313-1450
www.uspto.gov

APPLICATION NO.	FILING DATE	FIRST NAMED INVENTOR	ATTORNEY DOCKET NO.	CONFIRMATION NO.
11/090,717	03/25/2005	Marta Karczewicz	442-010567-US (C01)	6454

7590 05/15/2007

Perman & Green
425 Post Road
Fairfield, CT 06430-6232

EXAMINER
AN, SHAWN S

ART UNIT	PAPER NUMBER
2621	

DATE MAILED: 05/15/2007

Determination of Patent Term Adjustment under 35 U.S.C. 154 (b)
(application filed on or after May 29, 2000)

The Patent Term Adjustment to date is 260 day(s). If the issue fee is paid on the date that is three months after the mailing date of this notice and the patent issues on the Tuesday before the date that is 28 weeks (six and a half months) after the mailing date of this notice, the Patent Term Adjustment will be 260 day(s).

If a Continued Prosecution Application (CPA) was filed in the above-identified application, the filing date that determines Patent Term Adjustment is the filing date of the most recent CPA.

Applicant will be able to obtain more detailed information by accessing the Patent Application Information Retrieval (PAIR) WEB site (http://pair.uspto.gov).

Any questions regarding the Patent Term Extension or Adjustment determination should be directed to the Office of Patent Legal Administration at (571)-272-7702. Questions relating to issue and publication fee payments should be directed to the Customer Service Center of the Office of Patent Publication at 1-(888)-786-0101 or (571)-272-4200.

PTOL-85 (Rev. 07/06) Approved for use through 04/30/2007.

Patent Owner's Exhibit 2003, p. 50
Amazon et al v. Nokia
IPR2024-01139

Notice of Allowability	Application No.	Applicant(s)	
	11/090,717	KARCZEWICZ ET AL.	
	Examiner	Art Unit	
	Shawn S. An	2621	

-- The MAILING DATE of this communication appears on the cover sheet with the correspondence address--

All claims being allowable, PROSECUTION ON THE MERITS IS (OR REMAINS) CLOSED in this application. If not included herewith (or previously mailed), a Notice of Allowance (PTOL-85) or other appropriate communication will be mailed in due course. **THIS NOTICE OF ALLOWABILITY IS NOT A GRANT OF PATENT RIGHTS.** This application is subject to withdrawal from issue at the initiative of the Office or upon petition by the applicant. See 37 CFR 1.313 and MPEP 1308.

1. ☒ This communication is responsive to 5/7/07.

2. ☒ The allowed claim(s) is/are 50-100.

3. ☐ Acknowledgment is made of a claim for foreign priority under 35 U.S.C. § 119(a)-(d) or (f).
   a) ☐ All b) ☐ Some* c) ☐ None of the:
      1. ☐ Certified copies of the priority documents have been received.
      2. ☐ Certified copies of the priority documents have been received in Application No. _____ .
      3. ☐ Copies of the certified copies of the priority documents have been received in this national stage application from the International Bureau (PCT Rule 17.2(a)).

   * Certified copies not received: _____.

Applicant has THREE MONTHS FROM THE "MAILING DATE" of this communication to file a reply complying with the requirements noted below. Failure to timely comply will result in ABANDONMENT of this application.
THIS THREE-MONTH PERIOD IS NOT EXTENDABLE.

4. ☐ A SUBSTITUTE OATH OR DECLARATION must be submitted. Note the attached EXAMINER'S AMENDMENT or NOTICE OF INFORMAL PATENT APPLICATION (PTO-152) which gives reason(s) why the oath or declaration is deficient.

5. ☐ CORRECTED DRAWINGS (as "replacement sheets") must be submitted.
   (a) ☐ including changes required by the Notice of Draftsperson's Patent Drawing Review (PTO-948) attached
      1) ☐ hereto or 2) ☐ to Paper No./Mail Date _____.
   (b) ☐ including changes required by the attached Examiner's Amendment / Comment or in the Office action of Paper No./Mail Date _____.

   Identifying indicia such as the application number (see 37 CFR 1.84(c)) should be written on the drawings in the front (not the back) of each sheet. Replacement sheet(s) should be labeled as such in the header according to 37 CFR 1.121(d).

6. ☐ DEPOSIT OF and/or INFORMATION about the deposit of BIOLOGICAL MATERIAL must be submitted. Note the attached Examiner's comment regarding REQUIREMENT FOR THE DEPOSIT OF BIOLOGICAL MATERIAL.

Attachment(s)

1. ☐ Notice of References Cited (PTO-892)
2. ☐ Notice of Draftperson's Patent Drawing Review (PTO-948)
3. ☐ Information Disclosure Statements (PTO/SB/08), Paper No./Mail Date _____
4. ☐ Examiner's Comment Regarding Requirement for Deposit of Biological Material
5. ☐ Notice of Informal Patent Application
6. ☐ Interview Summary (PTO-413), Paper No./Mail Date _____ .
7. ☒ Examiner's Amendment/Comment
8. ☒ Examiner's Statement of Reasons for Allowance
9. ☐ Other _____.

Patent Owner's Exhibit 2003, p. 51
Amazon et al v. Nokia
IPR2024-01139

EXAMINER'S AMENDMENT

1. An Examiner's amendment to the record appears below. Should the changes and/or additions be unacceptable to Applicant, an amendment may be filed as provided by 37 CFR 1.312. To ensure consideration of such an amendment, it MUST be submitted no later than the payment of the issue fee.

IN THE CLAIMS:

A) Please amend claim 96 as follows:

96. (Currently Amended) A codec comprising a still image encoder according to claim 93 and a still image decoder according to claim ~~45~~ 94.

REMARKS:

Claim 96 has been amended as discussed above, as authorized by Applicant's attorney, Geza Ziegler, Jr. (44,004) on May 10, 2007.

2. Any inquiry concerning this communication or earlier communications from the Examiner should be directed to *Shawn S. An* whose telephone number is 571-272-7324.

SHAWN AN
PRIMARY EXAMINER

5/10/07

Reasons for Allowance

Response to Amendment

1. As per Applicant's instruction as filed on 5/07/07, claims 1-49 have been canceled, and claims 50-100 have been newly added.

Statement of Reasons for Allowance

2. Claims 50-100 are allowed as having incorporated the similar novel features as the parent patent (# 6950469) independent claims.

The prior art of record fails to anticipate or make obvious the novel features as specified in claims 50 and 69-71.

Any comments considered necessary by applicant must be submitted no later than the payment of the issue fee and, to avoid processing delays, should preferably accompany the issue fee. Such submissions should be clearly labeled "Comments on Statement of Reasons for Allowance."

Conclusion

3. Any inquiry concerning this communication or earlier communications from the Examiner should be directed to *Shawn S. An* whose telephone number is 571-272-7324.

4. Information regarding the status of an application may be obtained from the Patent Application Information Retrieval (PAIR) system. Status information for published applications may be obtained from either Private PAIR or Public PAIR. Status information for unpublished applications is available through Private PAIR only. For more information about the PAIR system, see http://pair-direct.uspto.gov. Should you have questions on access to the Private PAIR system, contact the Electronic Business Center (EBC) at 866-217-9197 (toll-free).

5. The fax phone number for the organization where this application or proceeding is assigned is 703-872-9306.

SHAWN AN
PRIMARY EXAMINER

5/10/07

UNITED STATES PATENT AND TRADEMARK OFFICE

UNITED STATES DEPARTMENT OF COMMERCE
United States Patent and Trademark Office
Address: COMMISSIONER FOR PATENTS
P.O. Box 1450
Alexandria, Virginia 22313-1450
www.uspto.gov

Bib Data Sheet

CONFIRMATION NO. 6454

SERIAL NUMBER	FILING OR 371(c) DATE	CLASS	GROUP ART UNIT	ATTORNEY DOCKET NO.
11/090,717	03/25/2005 RULE	375	2621	442-010567-US (C01)

APPLICANTS

Marta Karczewicz, Irving, TX;
Antti Olli Hallapuro, Tampere, FINLAND;

**** CONTINUING DATA ****************************

This application is a CON of 09/954,608 09/17/2001 PAT 6,950,469

**** FOREIGN APPLICATIONS ***********************

IF REQUIRED, FOREIGN FILING LICENSE GRANTED
** 04/28/2005

		STATE OR COUNTRY	SHEETS DRAWING	TOTAL CLAIMS	INDEPENDENT CLAIMS
Foreign Priority claimed	☐ yes ☑ no	TX	26	~~20~~ 50	~~3~~ 4
35 USC 119 (a-d) conditions met	☐ yes ☑ no ☐ Met after Allowance				
Verified and Acknowledged	Examiner's Signature Initials				

ADDRESS
Perman & Green
425 Post Road
Fairfield, CT06430-6232

TITLE

Method for sub-pixel value interpolation

FILING FEE RECEIVED		
3000	FEES: Authority has been given in Paper No. _____ to charge/credit DEPOSIT ACCOUNT No. _____ for following:	☐ All Fees ☐ 1.16 Fees (Filing) ☐ 1.17 Fees (Processing Ext. of time) ☐ 1.18 Fees (Issue) ☐ Other _____ ☐ Credit

Issue Classification	Application/Control No.	Applicant(s)/Patent under Reexamination	
	11/090,717	KARCZEWICZ ET AL.	
	Examiner	Art Unit	
	Shawn S. An	2621	

ISSUE CLASSIFICATION

ORIGINAL						CROSS REFERENCE(S)						
CLASS				SUBCLASS	CLASS	SUBCLASS (ONE SUBCLASS PER BLOCK)						
375				240.17	375	240.16	240.12	240.14	240.15			
INTERNATIONAL CLASSIFICATION					382	238	236	239				
H	0	4	B	1/66								
				/								
				/								
				/								
				/								

(Assistant Examiner) (Date)	SHAWN S. AN 5/10/2007	Total Claims Allowed: 51
(Legal Instruments Examiner) (Date) 5/14/07	(Primary Examiner) (Date)	O.G. Print Claim(s): 1 / O.G. Print Fig.: 7

☐ Claims renumbered in the same order as presented by applicant ☐ CPA ☐ T.D. ☐ R.1.47

Final	Original	Final	Original	Final	Original	Final	Original	Final	Original	Final	Original	Final	Original
	1		31	12	61	44	91		121		151		181
	2		32	13	62	45	92		122		152		182
	3		33	14	63	46	93		123		153		183
	4		34	15	64	48	94		124		154		184
	5		35	16	65	49	95		125		155		185
	6		36	17	66	51	96		126		156		186
	7		37	18	67	27	97		127		157		187
	8		38	19	68	47	98		128		158		188
	9		39	20	69	28	99		129		159		189
	10		40	21	70	50	100		130		160		190
	11		41	22	71		101		131		161		191
	12		42	23	72		102		132		162		192
	13		43	26	73		103		133		163		193
	14		44	24	74		104		134		164		194
	15		45	25	75		105		135		165		195
	16		46	29	76		106		136		166		196
	17		47	30	77		107		137		167		197
	18		48	31	78		108		138		168		198
	19		49	32	79		109		139		169		199
	20	1	50	33	80		110		140		170		200
	21	2	51	34	81		111		141		171		201
	22	4	52	35	82		112		142		172		202
	23	3	53	36	83		113		143		173		203
	24	5	54	37	84		114		144		174		204
	25	6	55	38	85		115		145		175		205
	26	7	56	39	86		116		146		176		206
	27	8	57	40	87		117		147		177		207
	28	9	58	41	88		118		148		178		208
	29	10	59	42	89		119		149		179		209
	30	11	60	43	90		120		150		180		210

Patent Owner's Exhibit 2003 p. 56
Amazon et al v. Nokia
IPR2024-01139

Index of Claims	Application/Control No.	Applicant(s)/Patent under Reexamination
	11/090,717	KARCZEWICZ ET AL.
	Examiner: Shawn S. An	Art Unit: 2621

√	Rejected	–	(Through numeral) Cancelled	N	Non-Elected	A	Appeal
=	Allowed	÷	Restricted	I	Interference	O	Objected

Claim Final	Claim Original	Date 5/9/07							
	1								
	2								
	3								
	4								
	5								
	6								
	7								
	8								
	9								
	10								
	11								
	12								
	13								
	14								
	15								
	16								
	17								
	18								
	19								
	20								
	21								
	22								
	23								
	24								
	25								
	26								
	27								
	28								
	29								
	30								
	31								
	32								
	33								
	34								
	35								
	36								
	37								
	38								
	39								
	40								
	41								
	42								
	43								
	44								
	45								
	46								
	47								
	48								
	49								
1	50	=							

Claim Final	Claim Original	Date 5/9/07							
2	51	=							
4	52	=							
3	53	=							
5	54	=							
6	55	=							
7	56	=							
8	57	=							
9	58	=							
10	59	=							
11	60	=							
12	61	=							
13	62	=							
14	63	=							
15	64	=							
16	65	=							
17	66	=							
18	67	=							
19	68	=							
20	69	=							
21	70	=							
22	71	=							
23	72	=							
26	73	=							
24	74	=							
25	75	=							
29	76	=							
30	77	=							
31	78	=							
32	79	=							
33	80	=							
34	81	=							
35	82	=							
36	83	=							
37	84	=							
38	85	=							
39	86	=							
40	87	=							
41	88	=							
42	89	=							
43	90	=							
44	91	=							
45	92	=							
46	93	=							
48	94	=							
49	95	=							
51	96	=							
27	97	=							
47	98	=							
28	99	=							
50	100	=							

Claim Final	Claim Original	Date							
	101								
	102								
	103								
	104								
	105								
	106								
	107								
	108								
	109								
	110								
	111								
	112								
	113								
	114								
	115								
	116								
	117								
	118								
	119								
	120								
	121								
	122								
	123								
	124								
	125								
	126								
	127								
	128								
	129								
	130								
	131								
	132								
	133								
	134								
	135								
	136								
	137								
	138								
	139								
	140								
	141								
	142								
	143								
	144								
	145								
	146								
	147								
	148								
	149								
	150								

Search Notes	Application/Control No.	Applicant(s)/Patent under Reexamination	
	11/090,717	KARCZEWICZ ET AL.	
	Examiner	Art Unit	
	Shawn S. An	2621	

SEARCHED			
Class	Subclass	Date	Examiner
375	240.17	5/9/2007	SA
	240.16		SA
	240.12		SA
	240.14		SA
	240.15		SA
382	238		SA
	236		SA
	239		SA

INTERFERENCE SEARCHED			
Class	Subclass	Date	Examiner
375	**240.17**	5/9/2007	**SA**
	240.16		SA
	240.12		SA
382/238 382/236			SA

SEARCH NOTES (INCLUDING SEARCH STRATEGY)		
	DATE	EXMR

IN THE UNITED STATES PATENT AND TRADEMARK OFFICE

APPLICANT(s):	Karczewicz et al.	CONF. NO.	6454
SERIAL NO.:	11/090,717	ART UNIT:	2621
FILING DATE:	Herewith	EXAMINER:	An, Shawn S
TITLE:	METHOD FOR SUB-PIXEL VALUE INTERPOLATION		
ATTORNEY DOCKET NO.:	982-010567-US (C01)		

Mail Stop Amendment
Commissioner of Patents
P.O. Box 1450
Alexandria, VA 22313-1450

AMENDMENT

I. INTRODUCTION

This is in response to the Office Action mailed February 9, 2007 in regard to the above-identified patent application. Reconsideration of the rejection is respectfully solicited in light of the following amendment and remarks.

Please amend the Application as follows:

II. CLAIM AMENDMENTS

1-49 (Cancelled)

50. (New) A method for sub-pixel value interpolation to determine values for sub-pixels situated within a rectangular bounded region defined by four corner pixels with no intermediate pixels between the corners, the pixels and sub-pixels being arranged in rows and columns, the pixel and sub-pixel locations being representable mathematically within the rectangular bounded region using the co-ordinate notation $K/2^N$, $L/2^N$, K and L being positive integers having respective values between zero and 2^N, N being a positive integer greater than one and representing a particular degree of sub-pixel value interpolation, the method comprising:

interpolating a sub-pixel value for a sub-pixel having co-ordinates with odd values of both K and L, according to a predetermined choice of a weighted average of the value of a nearest-neighbouring pixel and the value of the sub-pixel situated at co-ordinates 1/2, 1/2, and a weighted average of the values of a pair of diagonally-opposed sub-pixels having co-ordinates with even values of both K and L, including zero, situated within a quadrant of the rectangular bounded region defined by corner pixels having co-ordinates 1/2, 1/2 and the nearest neighbouring pixel;

interpolating sub-pixel values for sub-pixels having co-ordinates with K equal to an even value and L equal zero and sub-pixels having co-ordinates with K equal to zero and L equal to an even value, used in the interpolation of the sub-pixels having co-ordinates with odd values of both K and L, using weighted sums of the values of pixels located in rows and columns respectively; and

Patent Owner's Exhibit 2003, p. 60
Amazon et al v. Nokia
IPR2024-01139

interpolating sub-pixel values for sub-pixels having co-ordinates with even values of both K and L, used in the interpolation of sub-pixel values for the sub-pixels having co-ordinates with odd values of both K and L, using a predetermined choice of either a weighted sum of the values of sub-pixels having co-ordinates with K equal to an even value and L equal to zero and the values of sub-pixels having corresponding co-ordinates in immediately adjacent rectangular bounded regions, or a weighted sum of the values of sub-pixels having co-ordinates with K equal to zero and L equal to an even value and the values of sub-pixels having corresponding co-ordinates in immediately adjacent bounded rectangular regions.

51. (New) A method according to claim 50, comprising using a first and a second weight in the weighted average chosen to interpolate the sub-pixel value for a sub-pixel having co-ordinates with odd values of both K and L, wherein when the chosen weighted average is that involving the value of a nearest neighbouring pixel and the value of the sub-pixel situated at co-ordinates 1/2, 1/2, selecting the relative magnitudes of the first and second weights to be inversely proportional to the respective straight-line diagonal distances of the nearest-neighbouring pixel and the sub-pixel situated at co-ordinates 1/2, 1/2 to the sub-pixel having co-ordinates with odd values of both K and L whose value is being interpolated.

52. (New) A method according to claim 50, comprising using a first and a second weight in the weighted average chosen to interpolate the sub-pixel value for a sub-pixel having co-ordinates with odd values of both K and L, wherein when the chosen weighted average is that involving the values of a pair of diagonally-opposed sub-pixels having co-ordinates with even values of both K and L, selecting the relative magnitudes of the first and second weights to be inversely proportional to the respective straight-line diagonal distances of the sub-pixels having co-ordinates with even values of both K and L to the

Patent Owner's Exhibit 2003, p. 61
Amazon et al v. Nokia
IPR2024-01139

sub-pixel having co-ordinates with odd values of both K and L whose value is being interpolated.

53. (New) A method according to claim 51, comprising using first and second weights with equal values when the nearest-neighbouring pixel and second sub-pixel situated at co-ordinates 1/2, 1/2 are equidistant from the sub-pixel having co-ordinates with odd values of both K and L whose value is being interpolated.

54. (New) A method according to claim 52, comprising using first and second weights with equal values when the sub-pixels having co-ordinates with even values of both K and L are equidistant from the sub-pixel having co-ordinates with odd values of both K and L whose value is being interpolated.

55. (New) A method according to claim 50, comprising interpolating sub-pixel values for sub-pixels having co-ordinates with even values of both K and L, used in interpolation of sub-pixel values for the sub-pixels having co-ordinates with odd values of both K and L, using a weighted sum of the values of sub-pixels having co-ordinates with K equal to an even value and L equal to zero and the values of sub-pixels having corresponding co-ordinates in immediately adjacent rectangular bounded regions when the value of a sub-pixel having co-ordinates with K equal to an even value and L equal to an odd value is also required.

56. (New) A method according to claim 50, comprising interpolating sub-pixel values for sub-pixels having co-ordinates with even values of both K and L, used in interpolation of sub-pixel values for the sub-pixels having co-ordinates with odd values of both K and L, using a weighted sum of the values of sub-pixels having co-ordinates with K equal to

Patent Owner's Exhibit 2003, p. 62
Amazon et al v. Nokia
IPR2024-01139

zero and L equal to an even value and the values of sub-pixels having corresponding co-ordinates in immediately adjacent rectangular bounded regions when the value of a sub-pixel having co-ordinates with K equal to an odd value and L equal to an even value is also required.

57. (New) A method according to claim 50, comprising interpolating sub-pixel values for sub-pixels having co-ordinates with K equal to an odd value O and L equal to an even value E, not including zero or 2^N, by taking an average of the value of a first sub-pixel having co-ordinates with K equal to the even value O - 1 and L equal to E and a second sub-pixel having co-ordinates with K equal to the even value O + 1 and L equal to E.

58. (New) A method according to claim 50, comprising interpolating a sub-pixel value for a sub-pixel having co-ordinates with K equal to 1 and L equal to zero, by taking an average of the value of a pixel having co-ordinates with K equal to zero and L equal to zero, and a sub-pixel having co-ordinates with K equal to 2 and L equal to zero.

59. (New) A method according to claim 50, comprising interpolating a sub-pixel value for a sub-pixel having co-ordinates with K equal to 2^N - 1 and L equal to zero, by taking an average of the value of a pixel having co-ordinates with K equal to 2^N and L equal to zero, and a sub-pixel having co-ordinates with K equal to 2^N - 2 and L equal to zero.

60. (New) A method according to claim 50, comprising interpolating a sub-pixel value for a sub-pixel having co-ordinates with K equal to 1 and L equal to 2^N, by taking an average of the value of a pixel having co-ordinates with K equal to zero and L equal to 2^N, and a sub-pixel having co-ordinates with K equal to 2 and L equal to 2^N.

Patent Owner's Exhibit 2003, p. 63
Amazon et al v. Nokia
IPR2024-01139

61. (New) A method according to claim 50, comprising interpolating a sub-pixel value for a sub-pixel having co-ordinates with K equal to $2^N - 1$ and L equal to 2^N, by taking an average of the value of a pixel having co-ordinates with K equal to 2^N and L equal to 2^N, and a sub-pixel having co-ordinates with K equal to $2^N - 2$ and L equal to N.

62. (New) A method according to claim 50, comprising interpolating sub-pixel values for sub-pixels having co-ordinates with K equal to an even value E, not including zero or 2^N, and L equal to an odd value O, by taking an average of the value of a first sub-pixel having co-ordinates with K equal to E and L equal to the even value O - 1 and a second sub-pixel having co-ordinates with K equal to E and L equal to the even value O + 1.

63. (New) A method according to claim 50, comprising interpolating a sub-pixel value for a sub-pixel having co-ordinates with K equal to zero and L equal to 1, by taking an average of the value of a pixel having co-ordinates with K equal to zero and L equal to zero, and a sub-pixel having co-ordinates with K equal to zero and L equal to 2.

64. (New) A method according to claim 50, comprising interpolating a sub-pixel value for a sub-pixel having co-ordinates with K equal to 2^N and L equal to 1, by taking an average of the value of a pixel having co-ordinates with K equal to 2^N and L equal to zero, and a sub-pixel having co-ordinates with K equal to zero and L equal to 2.

65. (New) A method according to claim 50, comprising interpolating a sub-pixel value for a sub-pixel having co-ordinates with K equal to 0 and L equal to $2^N - 1$, by taking an average of the value of a pixel having co-ordinates with K equal to zero and L equal to 2^N, and a sub-pixel having co-ordinates with K equal to zero and L equal to $2^N - 2$.

Patent Owner's Exhibit 2003, p. 64
Amazon et al v. Nokia
IPR2024-01139

66. (New) A method according to claim 50, comprising interpolating a sub-pixel value for a sub-pixel having co-ordinates with K equal to 2^N and L equal to $2^N - 1$, by taking an average of the value of a pixel having co-ordinates with K equal to 2^N and L equal to 2^N, and a sub-pixel having co-ordinates with K equal to 2^N and L equal to $2^N - 2$.

67. (New) A method according to claim 50, comprising interpolating a sub-pixel value for the sub-pixel having co-ordinates with K equal to $2^N - 1$ and L equal to $2^N - 1$, by taking a weighted average of the values of the four corner pixels that define the rectangular bounded region.

68. (New) A method according to claim 50, comprising selecting a value for N from a list consisting of the values 2, 3, and 4.

69. (New) A method for quarter resolution sub-pixel value interpolation to determine values for sub-pixels situated within a rectangular bounded region defined by four corner pixels with no intermediate pixels between the corners, the pixels and sub-pixels being arranged in rows and columns, the pixel and sub-pixel locations being representable mathematically within the rectangular bounded region using the co-ordinate notation K/4, L/4, K and L being positive integers having respective values between zero and 4, the method comprising:

interpolating a sub-pixel value for a sub-pixel having co-ordinates with both K and L equal to 1 or 3, according to a predetermined choice of a weighted average of the value of a nearest-neighbouring pixel and the value of the sub-pixel situated at co-ordinates 2/4, 2/4, and a weighted average of the values of a pair of diagonally-opposed sub-pixels having co-ordinates with both K and L equal to zero, 2 or 4, situated within a quadrant of the rectangular bounded region defined by corner pixels having co-ordinates 2/4, 2/4 and the nearest neighbouring pixel;

Patent Owner's Exhibit 2003, p. 65
Amazon et al v. Nokia
IPR2024-01139

interpolating sub-pixel values for sub-pixels having co-ordinates with K equal to 2 and L equal zero and sub-pixels having co-ordinates with K equal to zero and L equal to 2, used in the interpolation of the sub-pixels having co-ordinates with both K and L equal to 1 or 3, using weighted sums of the values of pixels located in rows and columns respectively; and

interpolating a sub-pixel value for the sub-pixel having co-ordinates with both K and L equal to 2, used in the interpolation of sub-pixel values for the sub-pixels having co-ordinates with both K and L equal to 1 or 3, using a predetermined choice of either a weighted sum of the values of the sub-pixel having co-ordinates with K equal to 2 and L equal to zero and the values of sub-pixels having corresponding co-ordinates in immediately adjacent rectangular bounded regions, or a weighted sum of the value of the sub-pixel having co-ordinates with K equal to zero and L equal to 2 and the values of sub-pixels having corresponding co-ordinates in immediately adjacent rectangular bounded regions.

70. (New) A method for eighth resolution sub-pixel value interpolation to determine values for sub-pixels situated within a rectangular bounded region defined by four corner pixels with no intermediate pixels between the corners, the pixels and sub-pixels being arranged in rows and columns, the pixel and sub-pixel locations being representable mathematically with the rectangular bounded region using the co-ordinate notation K/8, L/8, K and L being positive integers having respective values between zero and 8, the method comprising:

interpolating a sub-pixel value for a sub-pixel having co-ordinates with both K and L equal to 1, 3, 5 or 7, according to a predetermined choice of a weighted average of the value of a nearest-neighbouring pixel and the value of the sub-pixel situated at co-ordinates 4/8, 4/8, and a weighted average of the values of a pair of diagonally-opposed sub-pixels having co-ordinates with both K and L equal to

Patent Owner's Exhibit 2003, p. 66
Amazon et al v. Nokia
IPR2024-01139

zero, 2, 4, 6 or 8, situated within a quadrant of the rectangular bounded region defined by corner pixels having co-ordinates 4/8, 4/8 and the nearest neighbouring pixel;

interpolating sub-pixel values for sub-pixels having co-ordinates with K equal to 2, 4 or 6 and L equal zero and sub-pixels having co-ordinates with K equal to zero and L equal to 2, 4 or 6, used in the interpolation of the sub-pixels having co-ordinates with both K and L equal to 1, 3, 5 or 7, using weighted sums of the values of pixels located in rows and columns respectively; and

interpolating sub-pixel values for sub-pixels having co-ordinates with both K and L equal to 2, 4 or 6, used in the interpolation of sub-pixel values for the sub-pixels having co-ordinates with both K and L equal to 1, 3, 5 or 7, using a predetermined choice of either a weighted sum of the values of sub-pixels having co-ordinates with K equal to 2, 4 or 6 and L equal to zero and the values of sub-pixels having corresponding co-ordinates in immediately adjacent rectangular bounded regions or a weighted sum of the values of sub-pixels having co-ordinates with K equal to zero and L equal to 2, 4 or 6 and the values of sub-pixels having corresponding co-ordinates in immediately adjacent rectangular bounded regions.

71. (New) An apparatus for sub-pixel value interpolation, the apparatus being operable to determine values for sub-pixels situated within a rectangular bounded region defined by four corner pixels with no intermediate pixels between the corners, the pixels and sub-pixels being arranged in rows and columns, the pixel and sub-pixel locations being representable mathematically within the rectangular bounded region using the co-ordinate notation $K/2^N$, $L/2^N$, K and L being positive integers having respective values between zero and 2^N, N being a positive integer greater than one and representing a particular degree of sub-pixel value interpolation, the apparatus comprising:

Patent Owner's Exhibit 2003, p. 67
Amazon et al v. Nokia
IPR2024-01139

circuitry operable to interpolate a sub-pixel value for a sub-pixel having co-ordinates with odd values of both K and L, according to a predetermined choice of a weighted average of the value of a nearest-neighbouring pixel and the value of the sub-pixel situated at co-ordinates 1/2, 1/2, and a weighted average of the values of a pair of diagonally-opposed sub-pixels having co-ordinates with even values of both K and L, including zero, situated within a quadrant of the rectangular bounded region defined by corner pixels having co-ordinates 1/2, 1/2 and the nearest neighbouring pixel;

circuitry operable to interpolate sub-pixel values for sub-pixels having co-ordinates with K equal to an even value and L equal zero and sub-pixels having co-ordinates with K equal to zero and L equal to an even value, used in the interpolation of the sub-pixels having co-ordinates with odd values of both K and L, using weighted sums of the values of pixels located in rows and columns respectively; and

circuitry operable to interpolate sub-pixel values for sub-pixels having co-ordinates with even values of both K and L, used in the interpolation of sub-pixel values for the sub-pixels having co-ordinates with odd values of both K and L, using a predetermined choice of either a weighted sum of the values of sub-pixels having co-ordinates with K equal to an even value and L equal to zero and the values of sub-pixels having corresponding co-ordinates in immediately adjacent rectangular bounded regions, or a weighted sum of the values of sub-pixels having co-ordinates with K equal to zero and L equal to an even value and the values of sub-pixels having corresponding co-ordinates in immediately adjacent bounded rectangular regions.

72. (New) An apparatus according to claim 71, wherein the apparatus is operable to use a first and a second weight in the weighted average chosen to interpolate the sub-

Patent Owner's Exhibit 2003, p. 68
Amazon et al v. Nokia
IPR2024-01139

pixel value for a sub-pixel having co-ordinates with odd values of both K and L, wherein when the chosen weighted average is that involving the value of a nearest neighbouring pixel and the value of the sub-pixel situated at co-ordinates 1/2, 1/2, the apparatus is operable to select the relative magnitudes of the first and second weights to be inversely proportional to the respective straight-line diagonal distances of the nearest-neighbouring pixel and the sub-pixel situated at co-ordinates 1/2, 1/2 to the sub-pixel having co-ordinates with odd values of both K and L whose value is being interpolated.

73. (New) An apparatus according to claim 71, wherein the apparatus is operable to use a first and a second weight in the weighted average chosen to interpolate the sub-pixel value for a sub-pixel having co-ordinates with odd values of both K and L, wherein when the chosen weighted average is that involving the values of a pair of diagonally-opposed sub-pixels having co-ordinates with even values of both K and L, the apparatus is operable to select the relative magnitudes of the first and second weights to be inversely proportional to the respective straight-line diagonal distances of the sub-pixels having co-ordinates with even values of both K and L to the sub-pixel having co-ordinates with odd values of both K and L whose value is being interpolated.

74. (New) An apparatus according to claim 72, wherein the apparatus is operable to use first and second weights with equal values when the nearest-neighbouring pixel and second sub-pixel situated at co-ordinates 1/2, 1/2 are equidistant from the sub-pixel having co-ordinates with odd values of both K and L whose value is being interpolated.

75. (New) An apparatus according to claim 72, wherein the apparatus is operable to use first and second weights with equal values when the sub-pixels having co-ordinates with even values of both K and L are equidistant from the sub-pixel having co-ordinates with odd values of both K and L whose value is being interpolated.

Patent Owner's Exhibit 2003, p. 69
Amazon et al v. Nokia
IPR2024-01139

76. (New) An apparatus according to claim 71, wherein the apparatus is operable to interpolate sub-pixel values for sub-pixels having co-ordinates with even values of both K and L, used in interpolation of sub-pixel values for the sub-pixels having co-ordinates with odd values of both K and L, using a weighted sum of the values of sub-pixels having co-ordinates with K equal to an even value and L equal to zero and the values of sub-pixels having corresponding co-ordinates in immediately adjacent rectangular bounded regions when the value of a sub-pixel having co-ordinates with K equal to an even value and L equal to an odd value is also required.

77. (New) An apparatus according to claim 71, wherein the apparatus is operable to interpolate sub-pixel values for sub-pixels having co-ordinates with even values of both K and L, used in interpolation of sub-pixel values for the sub-pixels having co-ordinates with odd values of both K and L, using a weighted sum of the values of sub-pixels having co-ordinates with K equal to zero and L equal to an even value and the values of sub-pixels having corresponding co-ordinates in immediately adjacent rectangular bounded regions when the value of a sub-pixel having co-ordinates with K equal to an odd value and L equal to an even value is also required.

78. (New) An apparatus according to claim 71, wherein the apparatus is operable to interpolate sub-pixel values for sub-pixels having co-ordinates with K equal to an odd value O and L equal to an even value E, not including zero or 2^N, by taking an average of the value of a first sub-pixel having co-ordinates with K equal to the even value O - 1 and L equal to E and a second sub-pixel having co-ordinates with K equal to the even value O + 1 and L equal to E.

79. (New) An apparatus according to claim 71, wherein the apparatus is operable to interpolate a sub-pixel value for a sub-pixel having co-ordinates with K equal to 1 and L equal to zero, by taking an average of the value of a pixel having co-ordinates with K

Patent Owner's Exhibit 2003, p. 70
Amazon et al v. Nokia
IPR2024-01139

equal to zero and L equal to zero, and a sub-pixel having co-ordinates with K equal to 2 and L equal to zero.

80. (New) An apparatus according to claim 71, wherein the apparatus is operable to interpolate a sub-pixel value for a sub-pixel having co-ordinates with K equal to $2^N - 1$ and L equal to zero, by taking an average of the value of a pixel having co-ordinates with K equal to 2^N and L equal to zero, and a sub-pixel having co-ordinates with K equal to $2^N - 2$ and L equal to zero.

81. (New) An apparatus according to claim 71, wherein the apparatus is operable to interpolate a sub-pixel value for a sub-pixel having co-ordinates with K equal to 1 and L equal to 2^N, by taking an average of the value of a pixel having co-ordinates with K equal to zero and L equal to 2^N, and a sub-pixel having co-ordinates with K equal to 2 and L equal to 2^N.

82. (New) An apparatus according to claim 71, wherein the apparatus is operable to interpolate a sub-pixel value for a sub-pixel having co-ordinates with K equal to $2^N - 1$ and L equal to 2^N, by taking an average of the value of a pixel having co-ordinates with K equal to 2^N and L equal to 2^N, and a sub-pixel having co-ordinates with K equal to $2^N - 2$ and L equal to N.

83. (New) An apparatus according to claim 71, wherein the apparatus is operable to interpolate sub-pixel values for sub-pixels having co-ordinates with K equal to an even value E, not including zero or 2^N, and L equal to an odd value O, by taking an average of the value of a first sub-pixel having co-ordinates with K equal to E and L equal to the even value O - 1 and a second sub-pixel having co-ordinates with K equal to E and L equal to the even value O + 1.

Patent Owner's Exhibit 2003, p. 71
Amazon et al v. Nokia
IPR2024-01139

84. (New) An apparatus according to claim 71, wherein the apparatus is operable to interpolate a sub-pixel value for a sub-pixel having co-ordinates with K equal to zero and L equal to 1, by taking an average of the value of a pixel having co-ordinates with K equal to zero and L equal to zero, and a sub-pixel having co-ordinates with K equal to zero and L equal to 2.

85. (New) An apparatus according to claim 71, wherein the apparatus is operable to interpolate a sub-pixel value for a sub-pixel having co-ordinates with K equal to 2^N and L equal to 1, by taking an average of the value of a pixel having co-ordinates with K equal to 2^N and L equal to zero, and a sub-pixel having co-ordinates with K equal to zero and L equal to 2.

86. (New) An apparatus according to claim 71, wherein the apparatus is operable to interpolate a sub-pixel value for a sub-pixel having co-ordinates with K equal to 0 and L equal to $2^N - 1$, by taking an average of the value of a pixel having co-ordinates with K equal to zero and L equal to 2^N, and a sub-pixel having co-ordinates with K equal to zero and L equal to $2^N - 2$.

87. (New) An apparatus according to claim 71, wherein the apparatus is operable to interpolate a sub-pixel value for a sub-pixel having co-ordinates with K equal to 2^N and L equal to $2^N - 1$, by taking an average of the value of a pixel having co-ordinates with K equal to 2^N and L equal to 2^N, and a sub-pixel having co-ordinates with K equal to 2^N and L equal to $2^N - 2$.

88. (New) An apparatus according to claim 71, wherein the apparatus is operable to interpolate a sub-pixel value for the sub-pixel having co-ordinates with K equal to $2^N - 1$

Patent Owner's Exhibit 2003, p. 72
Amazon et al v. Nokia
IPR2024-01139

and L equal to $2^N - 1$, by taking a weighted average of the values of the four corner pixels that define the rectangular bounded region.

89. (New) An apparatus according to claim 71, wherein N is set equal to 2.

90. (New) An apparatus according to claim 71, wherein N is set equal to 3.

91. (New) A video encoder comprising an apparatus for sub-pixel value interpolation according to claim 71.

92. (New) A still image encoder comprising an apparatus for sub-pixel value interpolation according to claim 71.

93. (New) A video decoder comprising an apparatus for sub-pixel value interpolation according to claim 71.

94. (New) A still image decoder comprising an apparatus for sub-pixel value interpolation according to claim 71.

95. (New) A codec comprising a video encoder according to claim 72 and a video decoder according to claim 73.

96. (New) A codec comprising a still image encoder according to claim 93 and a still image decoder according to claim 45.

Patent Owner's Exhibit 2003, p. 73
Amazon et al v. Nokia
IPR2024-01139

97. (New) A communications terminal comprising a video encoder according to claim 72.

98. (New) A communications terminal comprising a still image encoder according to claim 93.

99. (New) A communications terminal comprising a video decoder according to claim 73.

100. (New) A communications terminal comprising a still image decoder according to claim 95.

Patent Owner's Exhibit 2003, p. 74
Amazon et al v. Nokia
IPR2024-01139

II. REMARKS

1. Claims 1 – 49 are cancelled without prejudice. Claims 50 – 100 are new.

2. Claims 50 – 100 should overcome the double patenting rejection.

It is respectfully submitted that all of the claims now present in the application are clearly novel and patentable over the prior art of record, and are in proper form for allowance. Accordingly, favorable reconsideration and allowance is respectfully requested. Should any unresolved issues remain, the Examiner is invited to call Applicants' attorney at the telephone number indicated below.

The Commissioner is hereby authorized to charge $1,550 for (31) extra claims and $200 for (1) extra dependent claim along with payment for any other fees associated with this communication or credit any over payment to Deposit Account No. 16-1350.

Respectfully submitted,

Geza C. Ziegler, Jr.
Reg. No. 44,004

4 May 2007
Date

PERMAN & GREEN, LLP
425 Post Road
Fairfield, CT 06824
(203) 259-1800
Customer No.: 2512

Patent Owner's Exhibit 2003, p. 75
Amazon et al v. Nokia
IPR2024-01139

CERTIFICATE OF ELECTRONIC FILING

I hereby certify that this correspondence is being transmitted electronically on the date indicated below addressed to the Mail Stop AMENDMENT, Commissioner of Patents, P.O. Box 1450, Alexandria, VA 22313-1450.

Date: 5/7/07

Signature: Carolina Rodriguez

Carolina Rodriguez
Name

Patent Owner's Exhibit 2003, p. 76
Amazon et al v. Nokia
IPR2024-01139

Electronic Patent Application Fee Transmittal

Application Number:	11090717
Filing Date:	25-Mar-2005
Title of Invention:	Method for sub-pixel value interpolation
First Named Inventor/Applicant Name:	Marta Karczewicz
Filer:	GEZA C ZIEGLER JR/Carolina Rodriguez
Attorney Docket Number:	442-010567-US (C01)

Filed as Large Entity

Utility Filing Fees

Description	Fee Code	Quantity	Amount	Sub-Total in USD($)
Basic Filing:				
Pages:				
Claims:				
Claims in excess of 20	1202	31	50	1550
Independent claims in excess of 3	1201	1	200	200
Miscellaneous-Filing:				
Petition:				
Patent-Appeals-and-Interference:				
Post-Allowance-and-Post-Issuance:				

Description	Fee Code	Quantity	Amount	Sub-Total in USD($)
Extension-of-Time:				
Miscellaneous:				
			Total in USD ($)	**1750**

Electronic Acknowledgement Receipt

EFS ID:	1748232
Application Number:	11090717
International Application Number:	
Confirmation Number:	6454
Title of Invention:	Method for sub-pixel value interpolation
First Named Inventor/Applicant Name:	Marta Karczewicz
Correspondence Address:	Perman & Green - 425 Post Road - Fairfield CT 06430-6232 US 2032591800 -
Filer:	GEZA C ZIEGLER JR/Carolina Rodriguez
Filer Authorized By:	GEZA C ZIEGLER JR
Attorney Docket Number:	442-010567-US (C01)
Receipt Date:	07-MAY-2007
Filing Date:	25-MAR-2005
Time Stamp:	09:57:19
Application Type:	Utility

Payment information:

Submitted with Payment	yes
Payment was successfully received in RAM	$1750
RAM confirmation Number	1673

Patent Owner's Exhibit 2003, p. 79
Amazon et al v. Nokia
IPR2024-01139

Deposit Account	161350

The Director of the USPTO is hereby authorized to charge indicated fees and credit any overpayment as follows:

Charge any Additional Fees required under 37 C.F.R. Section 1.16 and 1.17

File Listing:

Document Number	Document Description	File Name	File Size(Bytes)	Multi Part /.zip	Pages (if appl.)
1		Amendment_070507.pdf	543695	yes	18

Multipart Description/PDF files in .zip description

Document Description	Start	End
Amendment - After Non-Final Rejection	1	1
Claims	2	16
Applicant Arguments/Remarks Made in an Amendment	17	18

Warnings:

Information:

2	Fee Worksheet (PTO-06)	fee-info.pdf	8299	no	2

Warnings:

Information:

Total Files Size (in bytes):	551994

This Acknowledgement Receipt evidences receipt on the noted date by the USPTO of the indicated documents, characterized by the applicant, and including page counts, where applicable. It serves as evidence of receipt similar to a Post Card, as described in MPEP 503.

New Applications Under 35 U.S.C. 111
If a new application is being filed and the application includes the necessary components for a filing date (see 37 CFR 1.53(b)-(d) and MPEP 506), a Filing Receipt (37 CFR 1.54) will be issued in due course and the date shown on this Acknowledgement Receipt will establish the filing date of the application.

National Stage of an International Application under 35 U.S.C. 371
If a timely submission to enter the national stage of an international application is compliant with the conditions of 35 U.S.C. 371 and other applicable requirements a Form PCT/DO/EO/903 indicating acceptance of the application as a national stage submission under 35 U.S.C. 371 will be issued in addition to the Filing Receipt, in due course.

New International Application Filed with the USPTO as a Receiving Office
If a new international application is being filed and the international application includes the necessary components for an international filing date (see PCT Article 11 and MPEP 1810), a Notification of the International Application Number and of the International Filing Date (Form PCT/RO/105) will be issued in due course, subject to prescriptions concerning national security, and the date shown on this Acknowledgement Receipt will establish the international filing date of the application.

PTO/SB/06 (08-03)
Approved for use through 7/31/2006. OMB 0651-0032
U.S. Patent and Trademark Office; U.S. DEPARTMENT OF COMMERCE
Under the Paperwork Reduction Act of 1995, no persons are required to respond to a collection of information unless it displays a valid OMB control number.

PATENT APPLICATION FEE DETERMINATION RECORD

Substitute for Form PTO-875

Application or Docket Number: 11/690,717

CLAIMS AS FILED – PART I

FOR	(Column 1) NUMBER FILED	(Column 2) NUMBER EXTRA	SMALL ENTITY RATE	SMALL ENTITY FEE	OR	OTHER THAN SMALL ENTITY RATE	OTHER THAN SMALL ENTITY FEE
BASIC FEE (37 CFR 1.16(a))				$____	OR		300.00
TOTAL CLAIMS (37 CFR 1.16(c))	49 minus 20 =	* 29	X $____ =		OR	X $____ =	500.00
INDEPENDENT CLAIMS (37 CFR 1.16(b))	11 minus 3 =	* 8	X $____ =		OR	X $____ =	200.00
MULTIPLE DEPENDENT CLAIM PRESENT (37 CFR 1.16(d))			+ $____ =		OR	+ $____ =	
* If the difference in column 1 is less than zero, enter "0" in column 2.			TOTAL		OR	TOTAL	1000.00

CLAIMS AS AMENDED – PART II

Amdt. 3/25/05

AMENDMENT A

	(Column 1) CLAIMS REMAINING AFTER AMENDMENT		(Column 2) HIGHEST NUMBER PREVIOUSLY PAID FOR	(Column 3) PRESENT EXTRA	SMALL ENTITY RATE	SMALL ENTITY ADDITIONAL FEE	OR	OTHER THAN SMALL ENTITY RATE	OTHER THAN SMALL ENTITY ADDITIONAL FEE
Total (37 CFR 1.16(c))	* 20	Minus	** 8	=	X $____ =		OR	X $____ =	
Independent (37 CFR 1.16(b))	* 3	Minus	*** 0	=	X $____ =		OR	X $____ =	
FIRST PRESENTATION OF MULTIPLE DEPENDENT CLAIM (37 CFR 1.16(d))					+ $____ =		OR	+ $____ =	
					TOTAL ADD'L FEE		OR	TOTAL ADD'L FEE	1000.00

cancel claim 21-49
5/2/07

AMENDMENT B

	(Column 1) CLAIMS REMAINING AFTER AMENDMENT		(Column 2) HIGHEST NUMBER PREVIOUSLY PAID FOR	(Column 3) PRESENT EXTRA	RATE	ADDITIONAL FEE	OR	RATE	ADDITIONAL FEE
Total (37 CFR 1.16(c))	* 50	Minus	** 20	= 36	X $____ =		OR	X $____ =	
Independent (37 CFR 1.16(b))	* 4	Minus	*** 3	= 1	X $____ =		OR	X $____ =	
FIRST PRESENTATION OF MULTIPLE DEPENDENT CLAIM (37 CFR 1.16(d))					+ $____ =		OR	+ $____ =	
					TOTAL ADD'L FEE		OR	TOTAL ADD'L FEE	

AMENDMENT C

	(Column 1) CLAIMS REMAINING AFTER AMENDMENT		(Column 2) HIGHEST NUMBER PREVIOUSLY PAID FOR	(Column 3) PRESENT EXTRA	RATE	ADDITIONAL FEE	OR	RATE	ADDITIONAL FEE
Total (37 CFR 1.16(c))	*	Minus	**	=	X $____ =		OR	X $____ =	
Independent (37 CFR 1.16(b))	*	Minus	***	=	X $____ =		OR	X $____ =	
FIRST PRESENTATION OF MULTIPLE DEPENDENT CLAIM (37 CFR 1.16(d))					+ $____ =		OR	+ $____ =	
					TOTAL ADD'L FEE		OR	TOTAL ADD'L FEE	

* If the entry in column 1 is less than the entry in column 2, write "0" in column 3.
** If the "Highest Number Previously Paid For" IN THIS SPACE is less than 20, enter "20".
*** If the "Highest Number Previously Paid For" IN THIS SPACE is less than 3, enter "3".
The "Highest Number Previously Paid For" (Total or Independent) is the highest number found in the appropriate box in column 1.

This collection of information is required by 37 CFR 1.16. The information is required to obtain or retain a benefit by the public which is to file (and by the USPTO to process) an application. Confidentiality is governed by 35 U.S.C. 122 and 37 CFR 1.14. This collection is estimated to take 12 minutes to complete, including gathering, preparing, and submitting the completed application form to the USPTO. Time will vary depending upon the individual case. Any comments on the amount of time you require to complete this form and/or suggestions for reducing this burden, should be sent to the Chief Information Officer, U.S. Patent and Trademark Office, U.S. Department of Commerce, P.O. Box 1450, Alexandria, VA 22313-1450. DO NOT SEND FEES OR COMPLETED FORMS TO THIS ADDRESS. SEND TO: Commissioner for Patents, P.O. Box 1450, Alexandria, VA 22313-1450.

If you need assistance in completing the form, call 1-800-PTO-9199 and select option 2.

Application size fee
$250.00
paid

UNITED STATES PATENT AND TRADEMARK OFFICE

UNITED STATES DEPARTMENT OF COMMERCE
United States Patent and Trademark Office
Address: COMMISSIONER FOR PATENTS
P.O. Box 1450
Alexandria, Virginia 22313-1450
www.uspto.gov

APPLICATION NO.	FILING DATE	FIRST NAMED INVENTOR	ATTORNEY DOCKET NO.	CONFIRMATION NO.
11/090,717	03/25/2005	Marta Karczewicz	442-010567-US (C01)	6454

7590 02/09/2007

Perman & Green
425 Post Road
Fairfield, CT 06430-6232

EXAMINER
AN, SHAWN S

ART UNIT	PAPER NUMBER
2621	

SHORTENED STATUTORY PERIOD OF RESPONSE	MAIL DATE	DELIVERY MODE
3 MONTHS	02/09/2007	PAPER

Please find below and/or attached an Office communication concerning this application or proceeding.

If NO period for reply is specified above, the maximum statutory period will apply and will expire 6 MONTHS from the mailing date of this communication.

Office Action Summary	Application No.	Applicant(s)
	11/090,717	KARCZEWICZ ET AL.
	Examiner	Art Unit
	Shawn S. An	2621

-- The MAILING DATE of this communication appears on the cover sheet with the correspondence address --

Period for Reply

A SHORTENED STATUTORY PERIOD FOR REPLY IS SET TO EXPIRE 3 MONTH(S) OR THIRTY (30) DAYS, WHICHEVER IS LONGER, FROM THE MAILING DATE OF THIS COMMUNICATION.

- Extensions of time may be available under the provisions of 37 CFR 1.136(a). In no event, however, may a reply be timely filed after SIX (6) MONTHS from the mailing date of this communication.
- If NO period for reply is specified above, the maximum statutory period will apply and will expire SIX (6) MONTHS from the mailing date of this communication.
- Failure to reply within the set or extended period for reply will, by statute, cause the application to become ABANDONED (35 U.S.C. § 133). Any reply received by the Office later than three months after the mailing date of this communication, even if timely filed, may reduce any earned patent term adjustment. See 37 CFR 1.704(b).

Status

1)☒ Responsive to communication(s) filed on 25 March 2005.

2a)☐ This action is **FINAL**. 2b)☒ This action is non-final.

3)☐ Since this application is in condition for allowance except for formal matters, prosecution as to the merits is closed in accordance with the practice under *Ex parte Quayle*, 1935 C.D. 11, 453 O.G. 213.

Disposition of Claims

4)☒ Claim(s) 1-20 is/are pending in the application.

4a) Of the above claim(s) _____ is/are withdrawn from consideration.

5)☐ Claim(s) _____ is/are allowed.

6)☒ Claim(s) 1-20 is/are rejected.

7)☐ Claim(s) _____ is/are objected to.

8)☐ Claim(s) _____ are subject to restriction and/or election requirement.

Application Papers

9)☐ The specification is objected to by the Examiner.

10)☒ The drawing(s) filed on 20 June 2005 is/are: a)☒ accepted or b)☐ objected to by the Examiner.

Applicant may not request that any objection to the drawing(s) be held in abeyance. See 37 CFR 1.85(a).

Replacement drawing sheet(s) including the correction is required if the drawing(s) is objected to. See 37 CFR 1.121(d).

11)☐ The oath or declaration is objected to by the Examiner. Note the attached Office Action or form PTO-152.

Priority under 35 U.S.C. § 119

12)☐ Acknowledgment is made of a claim for foreign priority under 35 U.S.C. § 119(a)-(d) or (f).

a)☐ All b)☐ Some * c)☐ None of:

1.☐ Certified copies of the priority documents have been received.

2.☐ Certified copies of the priority documents have been received in Application No. _____.

3.☐ Copies of the certified copies of the priority documents have been received in this National Stage application from the International Bureau (PCT Rule 17.2(a)).

* See the attached detailed Office action for a list of the certified copies not received.

Attachment(s)

1) ☒ Notice of References Cited (PTO-892)

2) ☐ Notice of Draftsperson's Patent Drawing Review (PTO-948)

3) ☒ Information Disclosure Statement(s) (PTO/SB/08) Paper No(s)/Mail Date 3/25/05.

4) ☐ Interview Summary (PTO-413) Paper No(s)/Mail Date. _____ .

5) ☐ Notice of Informal Patent Application

6) ☐ Other: _____.

Patent Owner's Exhibit 2003, p. 83
Amazon et al v. Nokia
IPR2024-01139

DETAILED ACTION

Response to Preliminary Amendment

1. As per Applicant's instructions as filed on 3/25/05, claims 21-49 have been canceled.

Double Patenting

2. The nonstatutory double patenting rejection is based on a judicially created doctrine grounded in public policy (a policy reflected in the statute) so as to prevent the unjustified or improper timewise extension of the "right to exclude" granted by a patent and to prevent possible harassment by multiple assignees. See *In re Goodman*, 11 F.3d 1046, 29 USPQ2d 2010 (Fed. Cir. 1993); *In re Longi*, 759 F.2d 887, 225 USPQ 645 (Fed. Cir. 1985); *In re Van Ornum*, 686 F.2d 937, 214 USPQ 761 (CCPA 1982); *In re Vogel*, 422 F.2d 438, 164 USPQ 619 (CCPA 1970); and, *In re Thorington*, 418 F.2d 528, 163 USPQ 644 (CCPA 1969).

A timely filed terminal disclaimer in compliance with 37 CFR 1.321© may be used to overcome an actual or provisional rejection based on a nonstatutory double patenting ground provided the conflicting application or patent is shown to be commonly owned with this application. See 37 CFR 1.130(b).

Effective January 1, 1994, a registered attorney or agent of record may sign a terminal disclaimer. A terminal disclaimer signed by the assignee must fully comply with 37 CFR 3.73(b).

3. Claims 1-20 are rejected under the judicially created doctrine of double patenting over claims 1-20 of U. S. Patent No. 6,950,469 B2, respectively, since the claims, if allowed, would improperly extend the "right to exclude" already granted in the patent.

The subject matter claimed in the instant application is fully disclosed in the patent and is covered by the patent since the patent and the application are claiming common subject matter, as follows:

Claims 1-20 recite all of the subject matter as recited in the patented claims 1-20. Therefore, the claims 1-20 have been rejected in view of double patenting.

Furthermore, there is no apparent reason why applicant was prevented from presenting claims corresponding to those of the instant application during prosecution of the application, which matured into a patent. See In re Schneller, 397 F.2d 350, 158 USPQ 210 (CCPA 1968). See also MPEP § 804.

Conclusion

4. Any inquiry concerning this communication or earlier communications from the Examiner should be directed to *Shawn S. An* whose telephone number is 571-272-7324.

5. The fax phone number for the organization where this application or proceeding is assigned is 571-273-8300.

6. Information regarding the status of an application may be obtained from the Patent Application Information Retrieval (PAIR) system. Status information for published applications may be obtained from either Private PAIR or Public PAIR. Status information for unpublished applications is available through Private PAIR only. For more information about the PAIR system, see http://pair-direct.uspto.gov. Should you have questions on access to the Private PAIR system, contact the Electronic Business Center (EBC) at 866-217-9197 (toll-free).

SHAWN AN
PRIMARY EXAMINER

2/03/07

INFORMATION DISCLOSURE CITATION FORM FOR PATENT APPLICATION (FORM PTO-1449) (Substitute)	Docket No.: 442-010567-US (C01) Serial No.:
	Applicant(s): Karczewicz et al.
	Filing Date: Herewith Group:

U.S. PATENTS

Initials	Patent Number	Issue Date	Name	Class	Sub-class	Filing date
SP	US 4,937,666	6/26/90	Yang	358	136	12/4/89
SP	US 5,452,377	9/19/95	Igarashi	382	238	4/01/92
SP	US 5,488,419	1/30/96	Hui et al.	348	402	3/15/93
SP	US 5,521,642	5/28/96	Park	348	409	10/7/93
SP	US 5,568,597	10/22/96	Nakayama et al.	395	132	5/20/94
SP	US 5,570,436	10/29/96	Fukushima et al.	382	300	12/8/94
SP	US 5,844,616	12/01/98	Collet et al.	348	441	5/28/94
SP	US 5,901,248	5/4/99	Fandrianto et al.	382	236	8/6/96
SP	US 6,219,464 B1	4/17/01	Greggain et al	382	298	8/24/99
	US 6,252,576 B1	6/26/01	Nottingham	345	127	8/6/98

U.S. PATENT PUBLICATIONS

Initials	Publication No.	Pub. Date	Name	Class	Sub-class	Filing Date
SP	2002/0064229	5/30/02	Nakaya	375	240.17	11/28/01

FOREIGN PATENT DOCUMENTS

Initials	Document Number	Date	Country	Name	Translation? Yes/No/n/a
SP	WO 99/04574	1/28/99	PCT	Robert Bosch GMBH	No
SP	EP 0,576,290 A2	12/29/93	Europe	Sony Corporation	N/a
SP	GB 2,205,707	12/14/88	United Kingdom	Sony Corporation	N/a

OTHER DOCUMENTS (Title, Author, Date, Pages, Etc., if known)

SP	FPM 21.3, "An Interpolator for HD-MAC Decoder", Chao et al.
SP	"Directional Interpolation for Magnetic Resonance Angiography Data", Mehran Mashfeghi, IEEE Transactions on Medical Imaging, Vol. 12, No. 2, June 1993.
not found →	Document Q15-K-59, "H.26L Test Model Long Term Number 5 (TML-5)
	draft0"" ITU, Study Group 16.
SP	Document VCEG-L20, "Complexity Reduced Motion Compensated Prediction with 1/8-pel Displacement Vector Resolution", ITU, Study Group 16.
SP	English translation of Japanese publication No. Hei 6-14739.
SP	Japanese Patent Document No. JP 62-039920

Examiner's Signature: Date Considered: 2/3/07

Initial if reference was considered, whether or not citation is in conformance with MPEP. Mark through citation if not considered. Include a copy of this citation form with your next correspondence to the Applicant(s).

Customer No.: 2512

Notice of References Cited	Application/Control No. 11/090,717	Applicant(s)/Patent Under Reexamination KARCZEWICZ ET AL.	
	Examiner Shawn S. An	Art Unit 2621	Page 1 of 1

U.S. PATENT DOCUMENTS

*		Document Number Country Code-Number-Kind Code	Date MM-YYYY	Name	Classification
*	A	US-6,950,469 B2	09-2005	Karczewicz et al.	375/240.17
	B	US-			
	C	US-			
	D	US-			
	E	US-			
	F	US-			
	G	US-			
	H	US-			
	I	US-			
	J	US-			
	K	US-			
	L	US-			
	M	US-			

FOREIGN PATENT DOCUMENTS

*		Document Number Country Code-Number-Kind Code	Date MM-YYYY	Country	Name	Classification
	N					
	O					
	P					
	Q					
	R					
	S					
	T					

NON-PATENT DOCUMENTS

*		Include as applicable: Author, Title Date, Publisher, Edition or Volume, Pertinent Pages)
	U	
	V	
	W	
	X	

*A copy of this reference is not being furnished with this Office action. (See MPEP § 707.05(a).)
Dates in MM-YYYY format are publication dates. Classifications may be US or foreign.

Index of Claims

Application/Control No.	Applicant(s)/Patent under Reexamination
11/090,717	KARCZEWICZ ET AL.
Examiner	**Art Unit**
Shawn S. An	2621

√	Rejected	–	(Through numeral) Cancelled	N	Non-Elected	A	Appeal
=	Allowed	÷	Restricted	I	Interference	O	Objected

Claim Final	Claim Original	Date 2/3/07							
	1	√							
	2								
	3								
	4								
	5								
	6								
	7								
	8								
	9								
	10								
	11								
	12								
	13								
	14								
	15								
	16								
	17								
	18								
	19								
	20	√							
	21								
	22								
	23								
	24								
	25								
	26								
	27								
	28								
	29								
	30								
	31								
	32								
	33								
	34								
	35								
	36								
	37								
	38								
	39								
	40								
	41								
	42								
	43								
	44								
	45								
	46								
	47								
	48								
	49								
	50								

Claim Final	Claim Original	Date							
	51								
	52								
	53								
	54								
	55								
	56								
	57								
	58								
	59								
	60								
	61								
	62								
	63								
	64								
	65								
	66								
	67								
	68								
	69								
	70								
	71								
	72								
	73								
	74								
	75								
	76								
	77								
	78								
	79								
	80								
	81								
	82								
	83								
	84								
	85								
	86								
	87								
	88								
	89								
	90								
	91								
	92								
	93								
	94								
	95								
	96								
	97								
	98								
	99								
	100								

Claim Final	Claim Original	Date							
	101								
	102								
	103								
	104								
	105								
	106								
	107								
	108								
	109								
	110								
	111								
	112								
	113								
	114								
	115								
	116								
	117								
	118								
	119								
	120								
	121								
	122								
	123								
	124								
	125								
	126								
	127								
	128								
	129								
	130								
	131								
	132								
	133								
	134								
	135								
	136								
	137								
	138								
	139								
	140								
	141								
	142								
	143								
	144								
	145								
	146								
	147								
	148								
	149								
	150								

Search Notes	Application/Control No.	Applicant(s)/Patent under Reexamination
	11/090,717	KARCZEWICZ ET AL.
	Examiner: Shawn S. An	Art Unit: 2621

SEARCHED			
Class	Subclass	Date	Examiner
375	240.17	2/3/2007	SA
	240.16		SA
	240.12		SA
382	236		SA
	238		SA
	239		SA

INTERFERENCE SEARCHED			
Class	Subclass	Date	Examiner

SEARCH NOTES (INCLUDING SEARCH STRATEGY)		
	DATE	EXMR

JFW

OIPE JC148
AUG 1 8 2005
PATENT & TRADEMARK OFFICE

IN THE UNITED STATES PATENT AND TRADEMARK OFFICE

APPLICANT(s):	Karczewicz et al.		
SERIAL NO.:	11/090,717	ART UNIT:	
FILING DATE:	03/25/2005	EXAMINER:	
TITLE:	METHOD FOR SUB-PIXEL VALUE INTERPOLATION		
ATTORNEY DOCKET NO.:	442-010567-US (C01)		

Mail Stop ISSUE FEE
Commissioner for Patents
P.O. Box 1450
Alexandria, VA 22313-1450

RESPONSE TO NOTICE OF DRAWING INCONSISTENCY WITH SPECIFICATION

I. INTRODUCTION

This is in response to the Notice mailed August 8, 2005 in regard to the above-identified patent application.

Please amend the Application as follows:

II. DRAWINGS

In the drawings, please cancel Figures 9 and 10.

Patent Owner's Exhibit 2003, p. 91
Amazon et al v. Nokia
IPR2024-01139

III. IN THE SPECIFICATION

Please replace the section beginning on page 40, line 4, through page 42, line 5 as rewritten below:

Brief Description of the Figures

An embodiment of the invention will now be described by way of example only with reference to the accompanying drawings in which:

Figure 1 shows a video encoder according to the prior art;

Figure 2 shows a video decoder according to the prior art;

Figure 3 shows the types of frames used in video encoding;

Figures 4a, 4b, and 4c show steps in block-matching;

Figure 5 illustrates the process of motion estimation to sub-pixel resolution;

Figure 6 shows a terminal device comprising video encoding and decoding equipment in which the method of the invention may be implemented;

Figure 7 shows a video encoder according an embodiment of the present invention;

Figure 8 shows a video decoder according to an embodiment of the present invention;

~~Figures 9 and 10 have not been used and any such figures should be disregarded;~~

Figure 11 shows a schematic diagram of a mobile telecommunications network according to an embodiment of the present invention;

Figure 12a shows a notation for describing pixel and sub-pixel locations specific to TML5;

Figure 12b shows interpolation of a half resolution sub-pixels;

Figure 12c shows interpolation of a half resolution sub-pixels;

Patent Owner's Exhibit 2003, p. 92
Amazon et al v. Nokia
IPR2024-01139

Figure 13a shows a notation for describing pixel and sub-pixel locations specific to TML6;

Figure 13b shows interpolation of a half resolution sub-pixels;

Figure 13c shows interpolation of a half resolution sub-pixels;

Figure 14 shows a notation for describing pixel and sub-pixel locations specific to the invention;

Figure 14b shows interpolation of a half resolution sub-pixels according to the invention;

Figure 14c shows interpolation of a half resolution sub-pixels according to the invention;

Figure 15 shows possible choices of diagonal interpolation for sub-pixels;

Figure 16 shows the half resolution sub-pixel values required to calculate other half resolution sub-pixel values;

Figure 17a shows the half resolution sub-pixel values that must be calculated in order to interpolate values for quarter resolution sub-pixels in an image block using the interpolation method of TML5;

Figure 17b shows the half resolution sub-pixel values that must be calculated in order to interpolate values for quarter resolution sub-pixels in an image block using the interpolation method according to the invention;

Figures 18a shows the numbers of half resolution sub-pixels that must be calculated in order to obtain values for quarter resolution sub-pixels within an image block using the sub-pixel value interpolation method according to TML5;

Figure 18b shows the numbers of half resolution sub-pixels that must be calculated in order to obtain values for quarter resolution sub-pixels within an image block using the sub-pixel value interpolation method according to the invention;

Figure 19 shows a numbering scheme for each of the 15 sub-pixel positions;

Patent Owner's Exhibit 2003, p. 93
Amazon et al v. Nokia
IPR2024-01139

Figure 20 shows nomenclature used to describe pixels, half resolution sub-pixels, quarter resolution sub-pixels and eighth resolution sub-pixels

Figure 21a shows the diagonal direction to be used in the interpolation of each eighth resolution sub-pixel in an embodiment of the invention;

Figure 21b shows the diagonal direction to be used in the interpolation of each eighth resolution sub-pixel in another embodiment of the invention; and

Figure 22 shows nomenclature used to describe eighth resolution sub-pixels within an image.

Patent Owner's Exhibit 2003, p. 94
Amazon et al v. Nokia
IPR2024-01139

IV. REMARKS

The application drawings do not include figures 9 and 10. Applicant thus proposes to cancel the drawings.

The specification is amended to delete the reference to Figures 9 and 10.

The Commissioner is hereby authorized to charge payment for any fees associated with this communication or credit any over payment to Deposit Account No. 16-1350.

Respectfully submitted,

Geza C. Ziegler, Jr.
Reg. No. 44,004

16 August 2005
Date

Perman & Green, LLP
425 Post Road
Fairfield, CT 06824
(203) 259-1800
Customer No.: 2512

CERTIFICATE OF FACSMILE

I hereby certify that this correspondence is being transmitted by fax to 571-273-8300, addressed to Mail Stop ISSUE FEE, Commissioner for Patents, P.O. Box 1450, Alexandria, VA 22313-1450.

Date: Aug. 16, 2005

Signature: Meaghan Bayl
Person Making Deposit

Patent Owner's Exhibit 2003, p. 95
Amazon et al v. Nokia
IPR2024-01139

UNITED STATES PATENT AND TRADEMARK OFFICE

UNITED STATES DEPARTMENT OF COMMERCE
United States Patent and Trademark Office
Address: COMMISSIONER FOR PATENTS
P.O. Box 1450
Alexandria, Virginia 22313-1450
www.uspto.gov

APPLICATION NUMBER	FILING OR 371 (c) DATE	FIRST NAMED APPLICANT	ATTORNEY DOCKET NUMBER
11/090,717	03/25/2005	Marta Karczewicz	442-010567-US (C01)

CONFIRMATION NO. 6454

FORMALITIES LETTER

OC000000015908151

Date Mailed: 05/02/2005

Perman & Green
425 Post Road
Fairfield, CT 06430-6232

OIPE JC32 JUN 2 0 2005 PATENT & TRADEMARK OFFICE

NOTICE TO FILE CORRECTED APPLICATION PAPERS

Filing Date Granted

An application number and filing date have been accorded to this application. The application is informal since it does not comply with the regulations for the reason(s) indicated below. Applicant is given TWO MONTHS from the date of this Notice within which to correct the informalities indicated below. Extensions of time may be obtained by filing a petition accompanied by the extension fee under the provisions of 37 CFR 1.136(a).

The required item(s) identified below must be timely submitted to avoid abandonment:

- Replacement drawings in compliance with 37 CFR 1.84 and 37 CFR 1.121(d) are required. The drawings submitted are not acceptable because:
    - The drawing sheets do not have the appropriate margin(s) (see 37 CFR 1.84(g)). Each sheet must include a top margin of at least 2.5 cm. (1 inch), a left side margin of at least 2.5 cm. (1 inch), a right side margin of at least 1.5 cm. (5/8 inch), and a bottom margin of at least 1.0 cm. (3/8 inch).See Figures(s) 14c.

The following item(s) appear to have been **omitted** from the application:

- Figure(s) **9,10** described in the specification.

I. Should applicant contend that the above-noted omitted item(s) was in fact deposited in the U.S. Patent and Trademark Office (USPTO) with the nonprovisional application papers, a copy of this Notice and a petition (and $400.00 petition fee *(37 CFR 1.17(f))*) with evidence of such deposit **must** be filed within **TWO MONTHS** of the date of this Notice. The petition fee will be refunded if is determined that the item(s) was received by the USPTO.

II. Should applicant desire to supply the omitted item(s) and accept the date that such omitted item(s) was filed in the USPTO as the filing date of the above-identified application, a copy of this Notice, the omitted item(s) (with a supplemental oath or declaration in compliance with 37 CFR 1.63 and 1.64 referring to such items), and a petition under 37 CFR 1.182 (with the $400.00 petition fee *(37 CFR 1.17(f))* requesting the later filing date **must** be filed within **TWO MONTHS** of the date of this Notice.

Applicant is advised that generally the filing fee required for an application is the filing fee in effect on the filing date accorded the application and that payment of the requisite basic filing fee on a date later than the filing date of the application requires payment of a surcharge (37 CFR 1.16(f)). To avoid processing delays and payment of a surcharge, applicant should submit any balance due for the requisite filing fee based on the later filing date being requested when submitting the omitted items(s) and the petition (and petition fee) requesting the later filing

date.

III. The failure to file a petition (and petition fee) under the above options (I) or (II) within **TWO MONTHS** of the date of this Notice (37 CFR 1.181(f)) will be treated as a constructive acceptance by the applicant of the application as deposited in the USPTO. **THIS TWO MONTH PERIOD IS NOT EXTENDABLE UNDER 37 CFR 1.136(a) or (b)**. In the absence of a timely filed petition in reply to this Notice, the application will maintain a filing date as of the date of deposit of the application papers in the USPTO, and original application papers (*i.e.*, the original disclosure of the invention) will include only those application papers present in the USPTO on the date of deposit.

In the event that applicant elects not to take action pursuant to options (I) or (II) above (thereby constructively electing option (III)), amendment of the specification to renumber the pages consecutively and cancel incomplete sentences caused by any omitted page(s), and/or amendment of the specification to cancel all references to any omitted drawing(s), relabel the drawing figures to be numbered consecutively (if necessary), and correct the references in the specification to the drawing figures to correspond with any relabeled drawing figures, is required. A copy of the drawing figures showing the proposed changes in red ink should accompany with any drawing changes . Such amendment and/or correction to the drawing figures, if necessary, should be by way of preliminary amendment submitted prior to the first Office action to avoid delays in the prosecution of the application.

Applicant is cautioned that correction of the above items may cause the specification and drawings page count to exceed 100 pages. If the specification and drawings exceed 100 pages, applicant will need to submit the required application size fee.

Replies should be mailed to: Mail Stop Missing Parts
Commissioner for Patents
P.O. Box 1450
Alexandria VA 22313-1450

A copy of this notice MUST be returned with the reply.

Mellonen

Office of Initial Patent Examination (703) 308-1202

PART 2 - COPY TO BE RETURNED WITH RESPONSE

OIPE IC32
JUN 2 0 2005
PATENT & TRADEMARK OFFICE

JFW

IN THE UNITED STATES PATENT AND TRADEMARK OFFICE

APPLICANT(s):	Karczewicz et al.		
SERIAL NO.:	11/090,717	ART UNIT:	
FILING DATE:	03/25/2005	EXAMINER:	
TITLE:	METHOD FOR SUB-PIXEL VALUE INTERPOLATION		
ATTORNEY DOCKET NO.:	442-010567-US (C01)		

Mail Stop Amendment
Commissioner of Patents
P.O. Box 1450
Alexandria, VA 22313-1450

PRELIMINARY AMENDMENT

I. INTRODUCTION

This is in response to the Notice to File Corrected Application Papers mailed May 2, 2005 in regard to the above-identified patent application.

Please amend the Application as follows:

II. DRAWINGS

In the drawings, please cancel Figures 9 and 10.

Patent Owner's Exhibit 2003, p. 99
Amazon et al v. Nokia
IPR2024-01139

OIPE
JUN 2 0 2005
PATENT & TRADEMARK OFFICE

III. REMARKS

The application drawings do not include figures 9 and 10. Applicant thus proposes to cancel the drawings. The specification indicates that Figures 9 and 10 are omitted.

A replacement set of drawings is enclosed herewith resulting in 28 pages of drawings.

The Commissioner is hereby authorized to charge payment for any fees associated with this communication or credit any over payment to Deposit Account No. 16-1350.

Respectfully submitted,

Geza C. Ziegler, Jr.
Reg. No. 44,004

16 June 2005
Date

Perman & Green, LLP
425 Post Road
Fairfield, CT 06824
(203) 259-1800
Customer No.: 2512

CERTIFICATE OF MAILING

I hereby certify that this correspondence is being deposited with the United States Postal Service on the date indicated below as first class mail in an envelope addressed to the Mail Stop Amendment, Commissioner of Patents, P.O. Box 1450, Alexandria, VA 22313-1450.

Date: June 16, 2005

Signature: Meaghan Bayl
Person Making Deposit

Patent Owner's Exhibit 2003, p. 100
Amazon et al v. Nokia
IPR2024-01139

OIPE JC32
JUN 2 0 2005
PATENT & TRADEMARK OFFICE

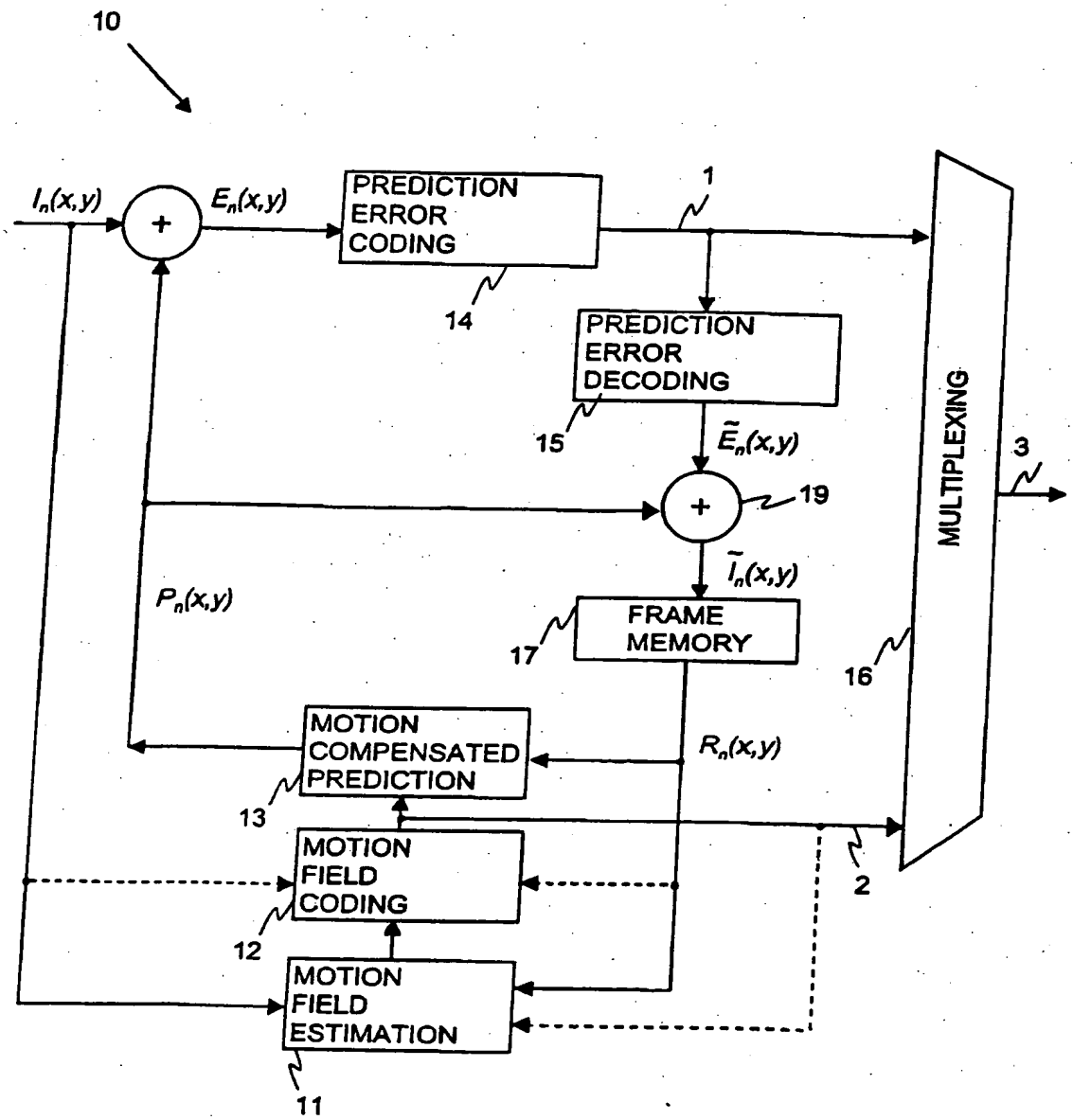

PRIOR ART

Fig. 1

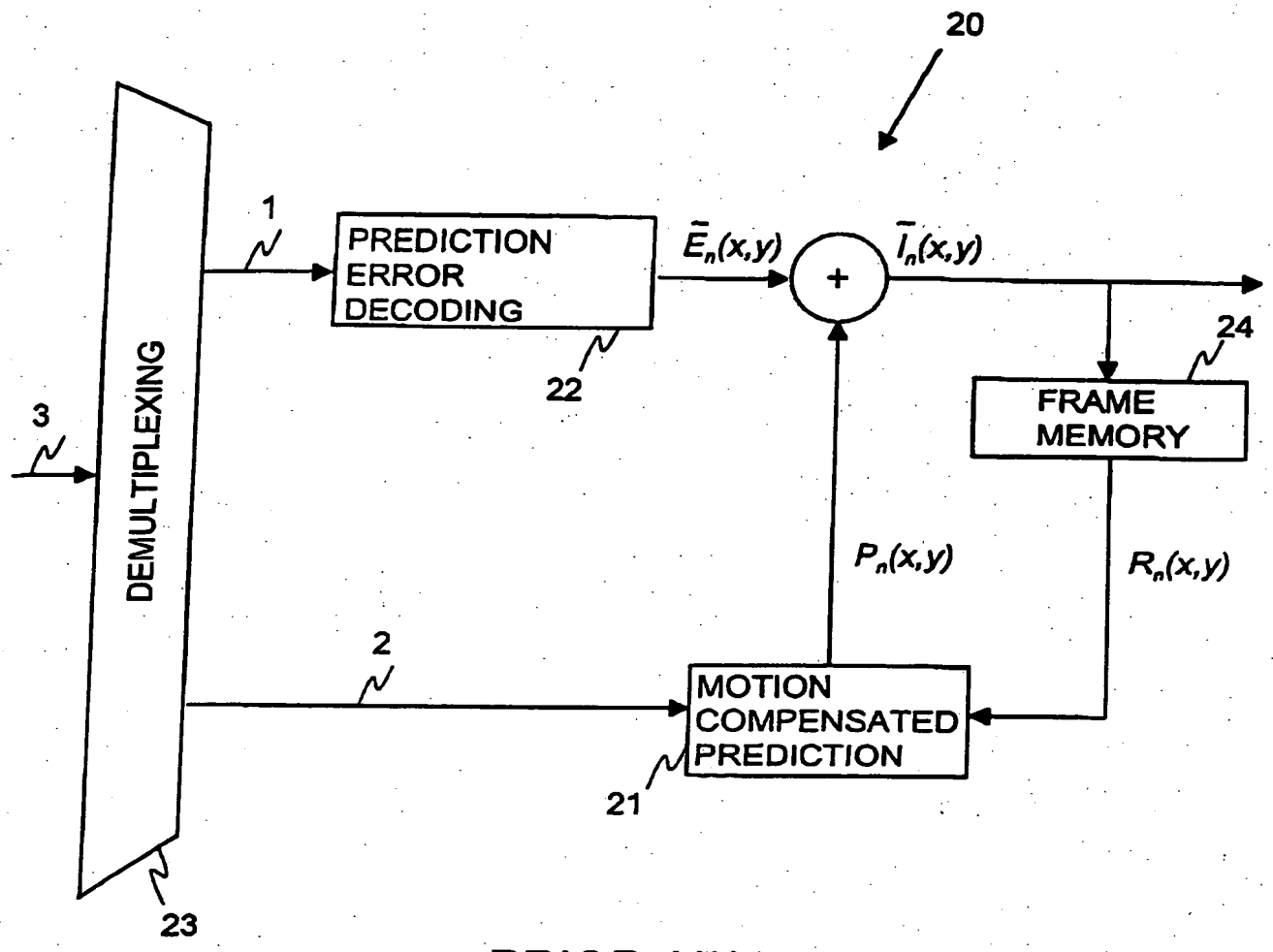

PRIOR ART

Fig. 2

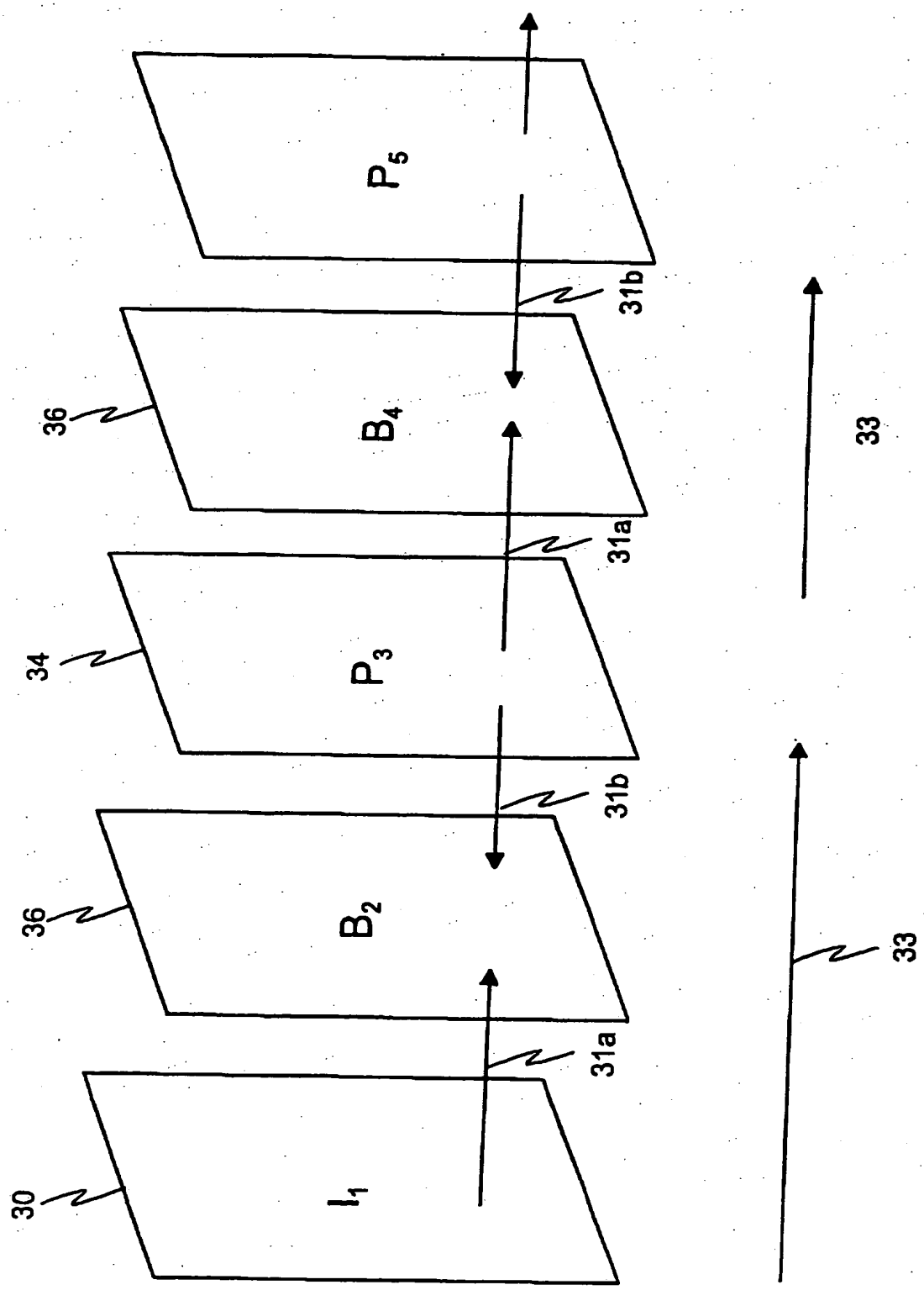

Fig. 3

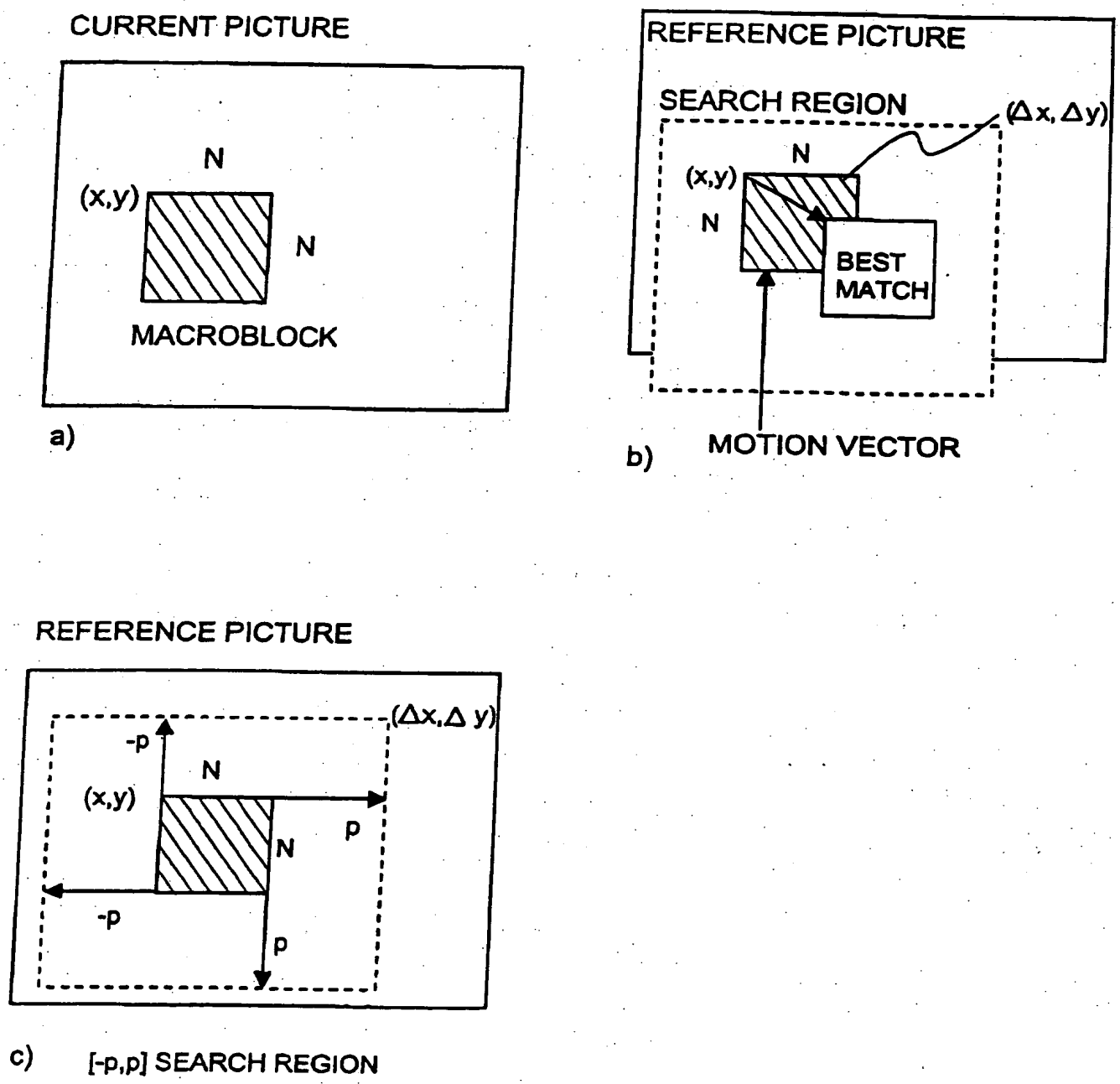
CURRENT PICTURE
N
(x,y)
N
MACROBLOCK
a)
REFERENCE PICTURE
SEARCH REGION
(Δx, Δy)
N
(x,y)
N
BEST MATCH
b)
MOTION VECTOR
REFERENCE PICTURE
(Δx,Δ y)
-p
N
(x,y)
p
N
-p
p
c)
[-p,p] SEARCH REGION

Fig. 4

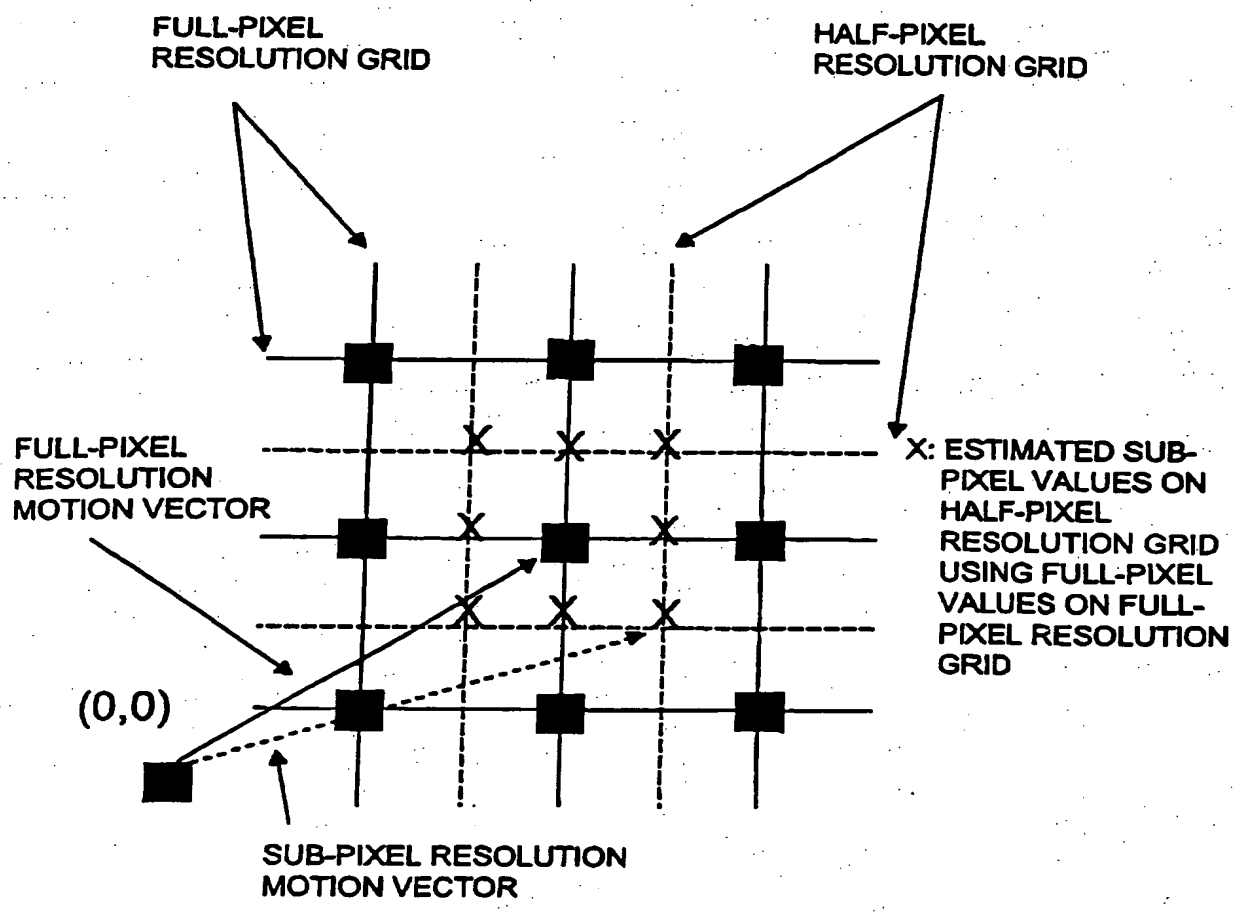
FULL-PIXEL RESOLUTION GRID
HALF-PIXEL RESOLUTION GRID
FULL-PIXEL RESOLUTION MOTION VECTOR
X: ESTIMATED SUB-PIXEL VALUES ON HALF-PIXEL RESOLUTION GRID USING FULL-PIXEL VALUES ON FULL-PIXEL RESOLUTION GRID
(0,0)
SUB-PIXEL RESOLUTION MOTION VECTOR

Fig. 5

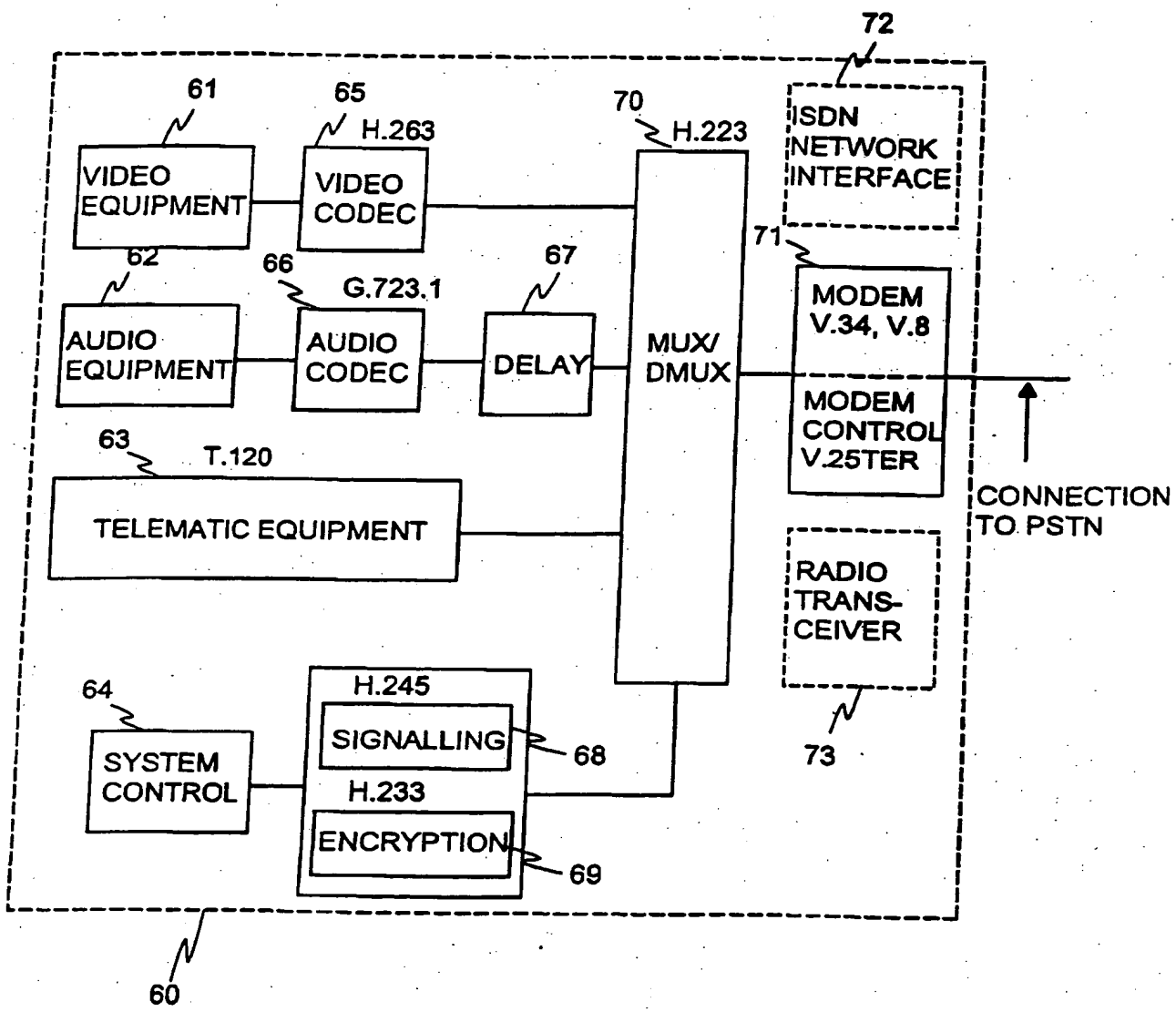
72
61
65
H.263
70
H.223
ISDN NETWORK INTERFACE
VIDEO EQUIPMENT
VIDEO CODEC
71
62
66
G.723.1
67
MODEM V.34, V.8
AUDIO EQUIPMENT
AUDIO CODEC
DELAY
MUX/ DMUX
MODEM CONTROL V.25TER
63
T.120
CONNECTION TO PSTN
TELEMATIC EQUIPMENT
RADIO TRANS-CEIVER
64
H.245
SIGNALLING
68
73
SYSTEM CONTROL
H.233
ENCRYPTION
69
60

Fig. 6

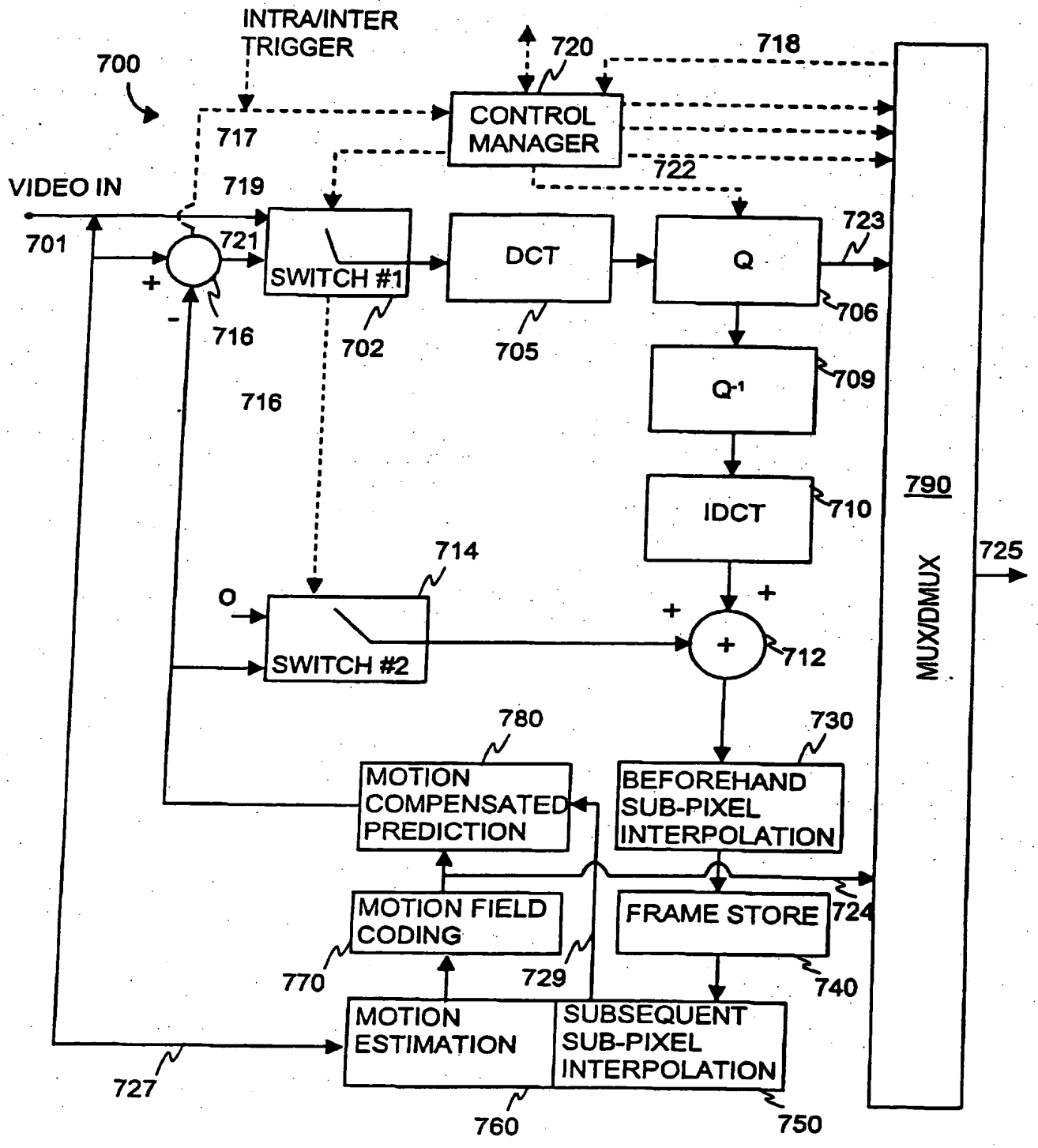
INTRA/INTER TRIGGER
700
720
718
CONTROL MANAGER
717
722
VIDEO IN
719
701
721
723
SWITCH #1
DCT
Q
+
-
716
702
705
706
Q-1
709
716
IDCT
710
790
714
725
MUX/DMUX
0
+
+
SWITCH #2
712
780
730
MOTION COMPENSATED PREDICTION
BEFOREHAND SUB-PIXEL INTERPOLATION
MOTION FIELD CODING
FRAME STORE
724
770
729
740
MOTION ESTIMATION
SUBSEQUENT SUB-PIXEL INTERPOLATION
727
760
750

Fig. 7

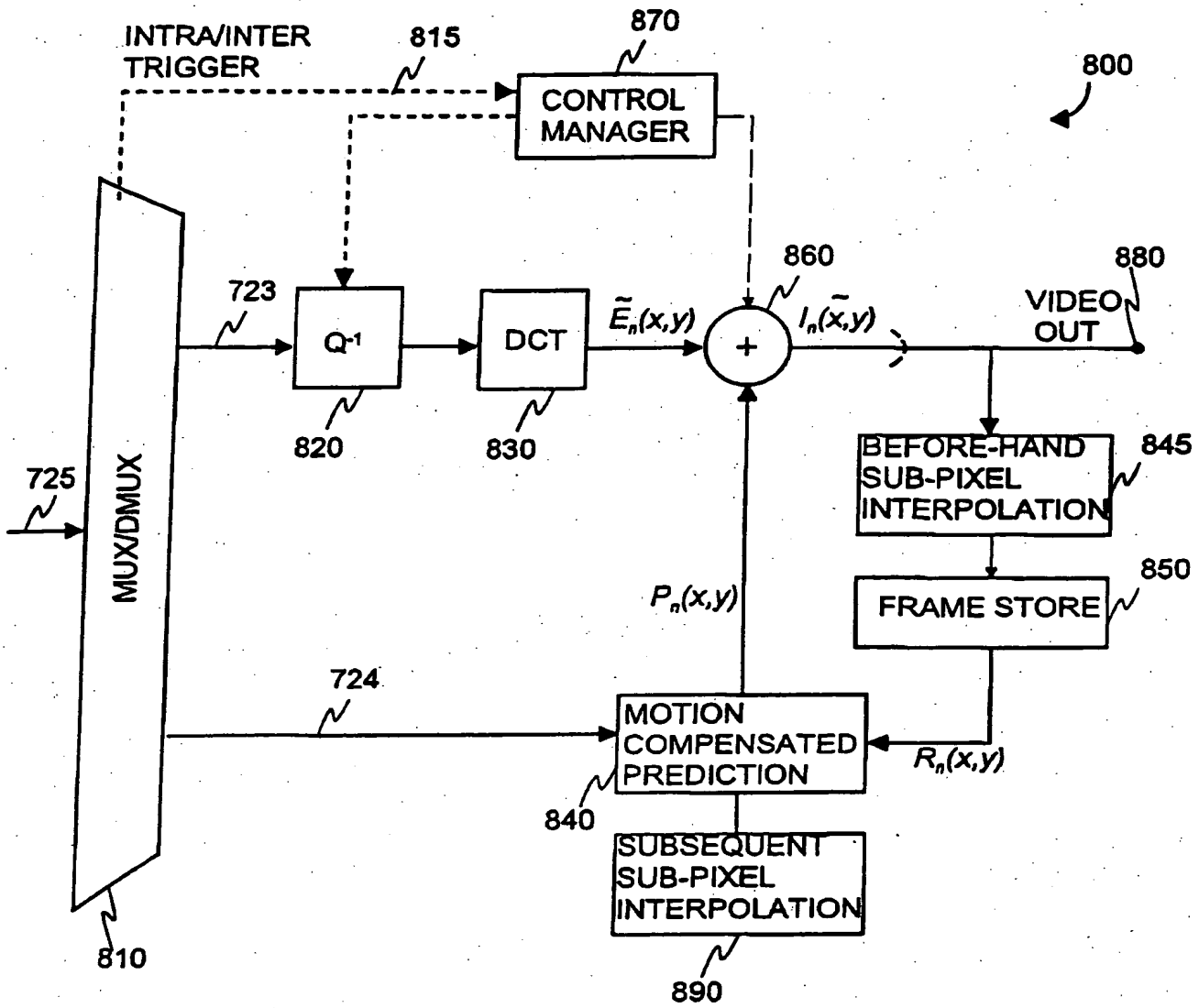
INTRA/INTER TRIGGER
815
870
CONTROL MANAGER
800
860
880
723
Q-1
DCT
$\tilde{E}_n(x,y)$
$I_n(\tilde{x},y)$
VIDEO OUT
820
830
BEFORE-HAND SUB-PIXEL INTERPOLATION
845
725
MUX/DMUX
850
$P_n(x,y)$
FRAME STORE
724
MOTION COMPENSATED PREDICTION
$R_n(x,y)$
840
SUBSEQUENT SUB-PIXEL INTERPOLATION
810
890

Fig. 8

Figure Intentionally Omitted

Fig. 9

Figure Intentionally Omitted

Fig. 10

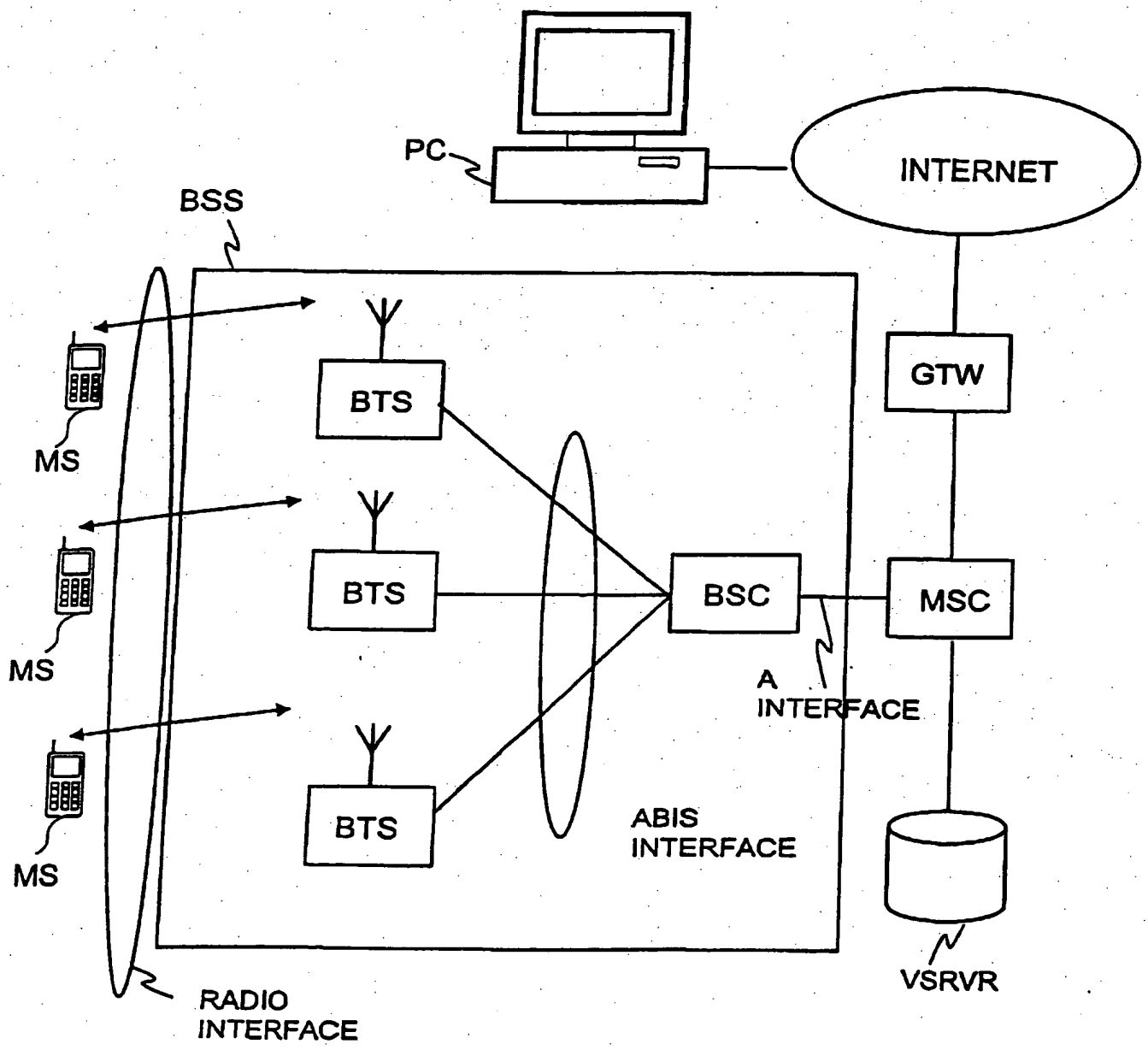
PC
INTERNET
BSS
GTW
BTS
MS
BTS
BSC
MSC
MS
A
INTERFACE
BTS
ABIS
INTERFACE
MS
VSRVR
RADIO
INTERFACE

Fig. 11

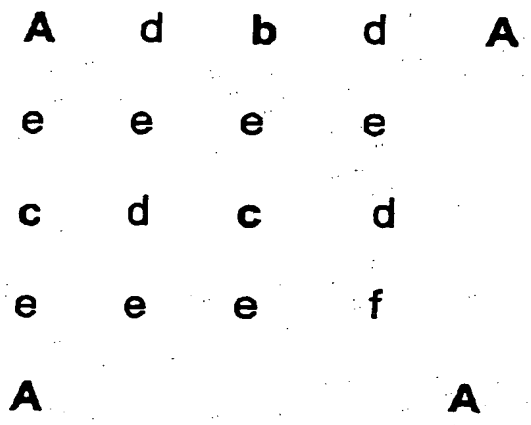

Fig. 12(a)

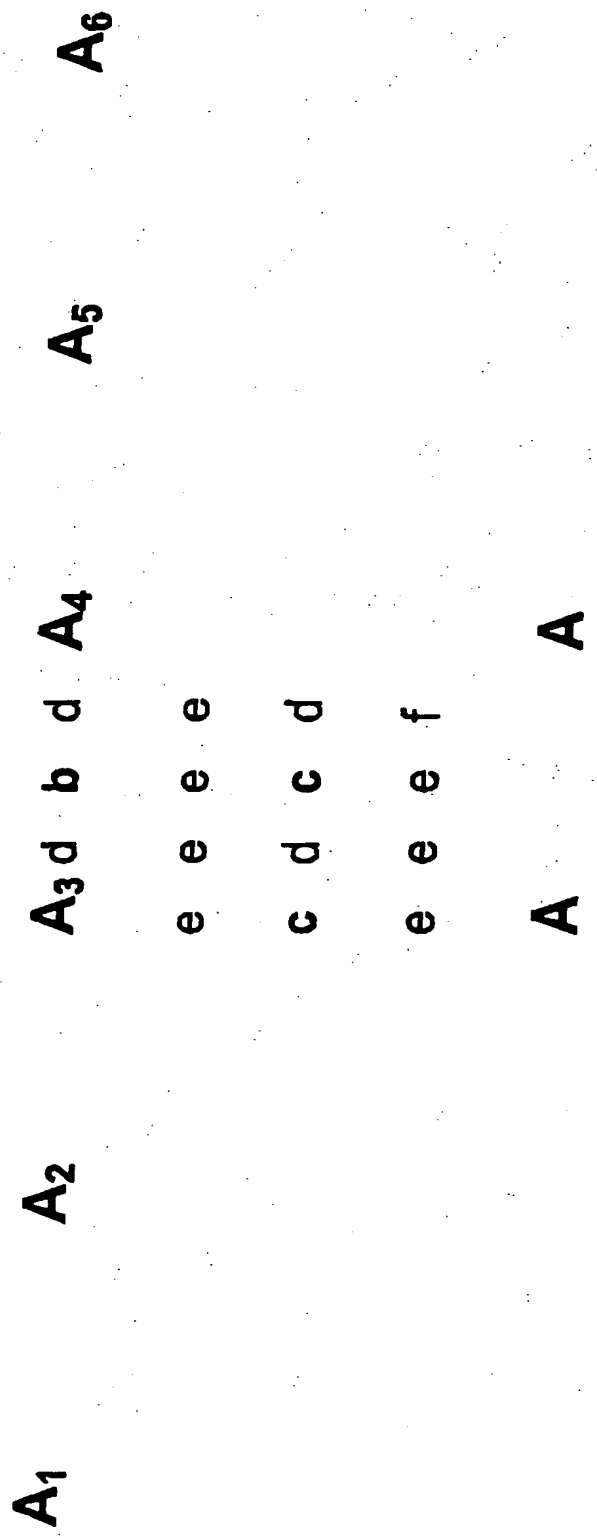

Figure12(b)

A_1 b_1

A_2 b_2

A_3 d b_3 d A
e e e e
c d c d
e e e f
A_4 b_4 A

A_5 b_5

A_6 b_6

Figure 12(c)

A	d	b	d	A
e	g	e	g	
c	d	c	d	
e	g	e	f	
A				A

Fig. 13(a)

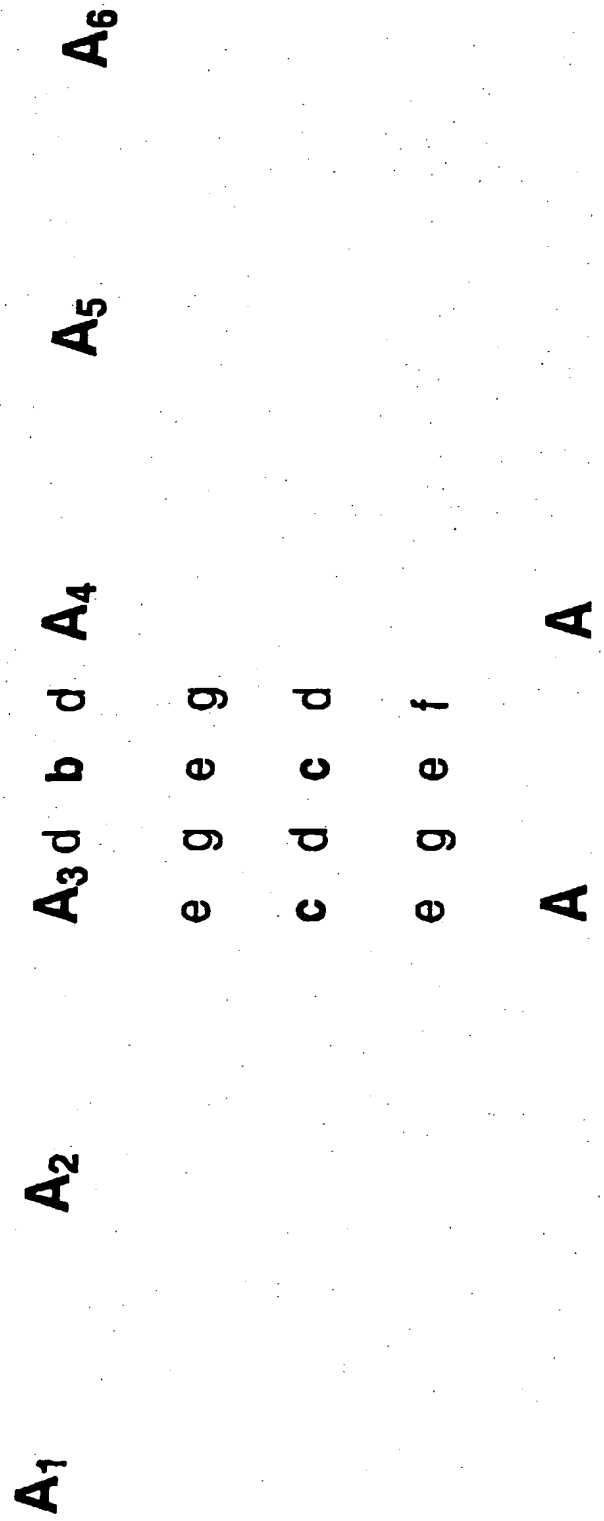

Figure13(b)

A_1 b_1

A_2 b_2

A_3	d	b_3	d	A
e	g	e	g	
c	d	c	d	
e	g	e	f	
A_4		b_4		A

A_5 b_5

A_6 b_6

Figure 13(c)

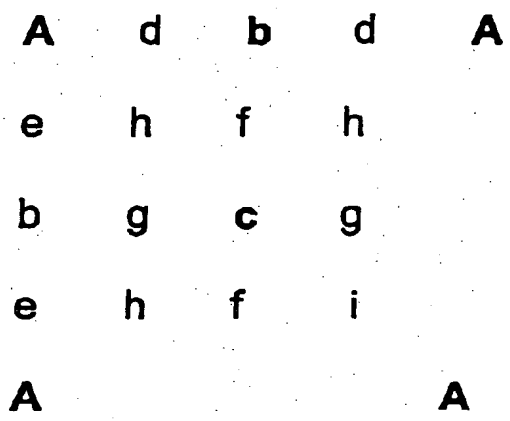

Fig. 14(a)

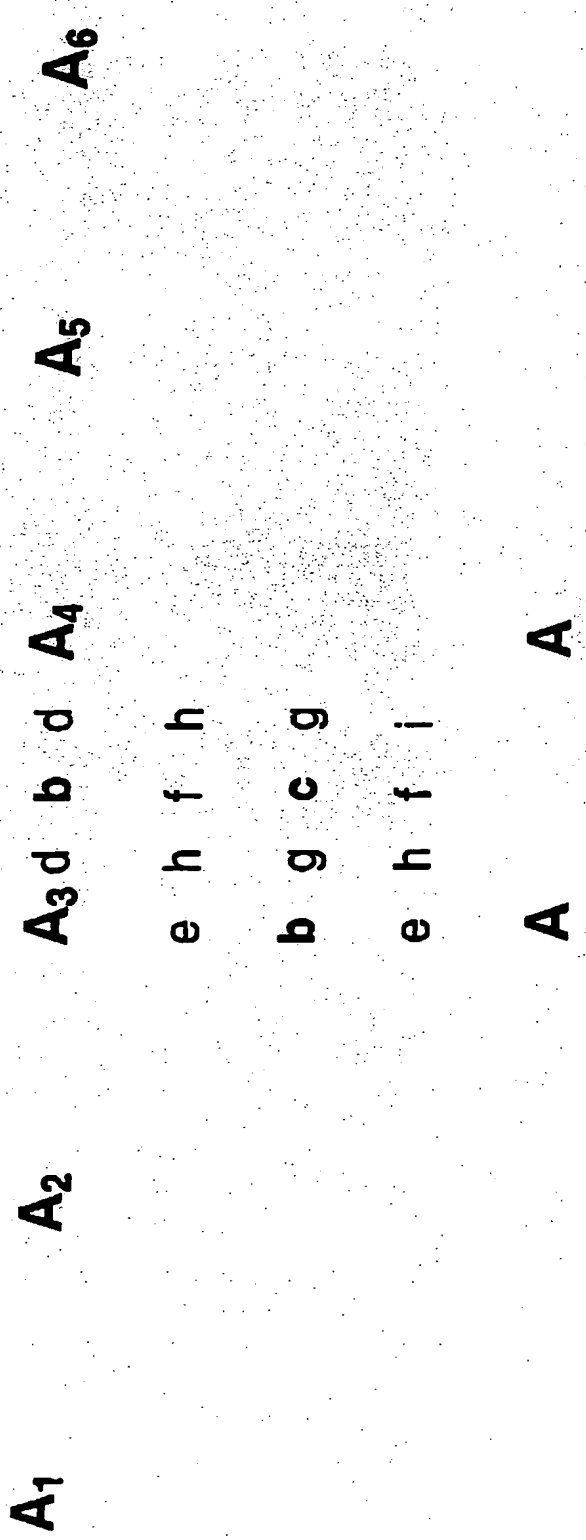

Figure14(b)

A_1

A_2

A_3	d	**b**	d	**A**
e	h	f	h	
b	g	**c**	g	
e	h	f	i	
A_4				**A**

A_5

A_6

Figure 14(c)

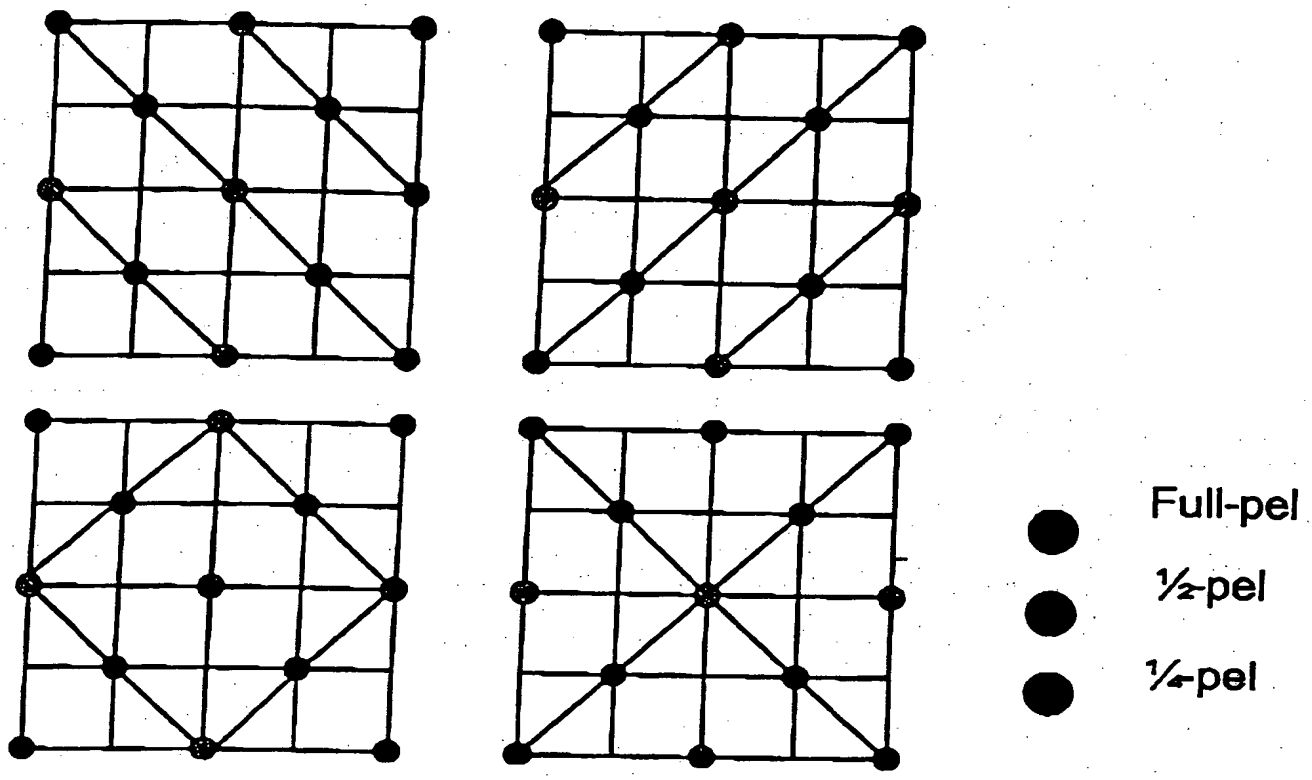

Fig. 15

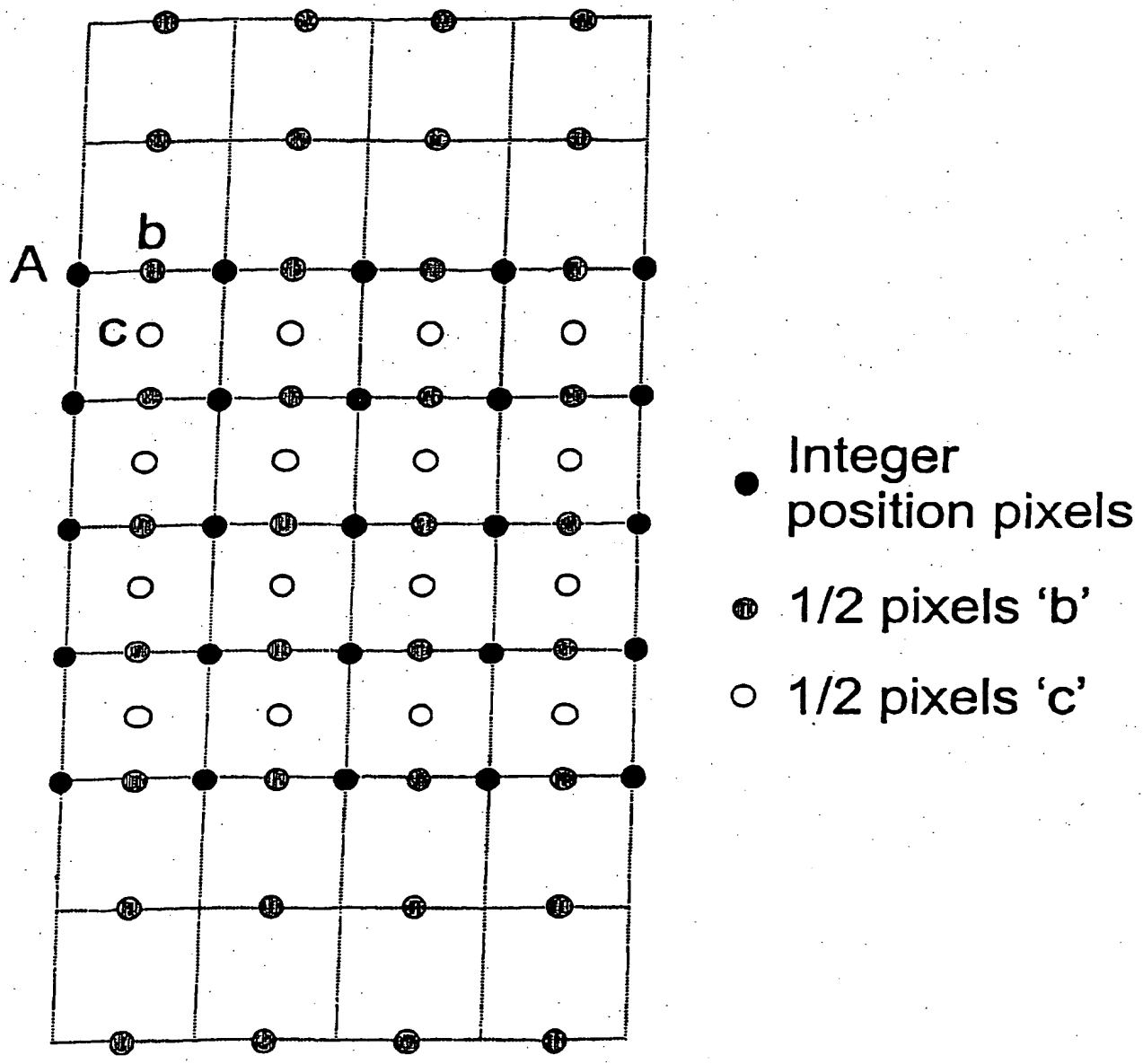

Fig. 16

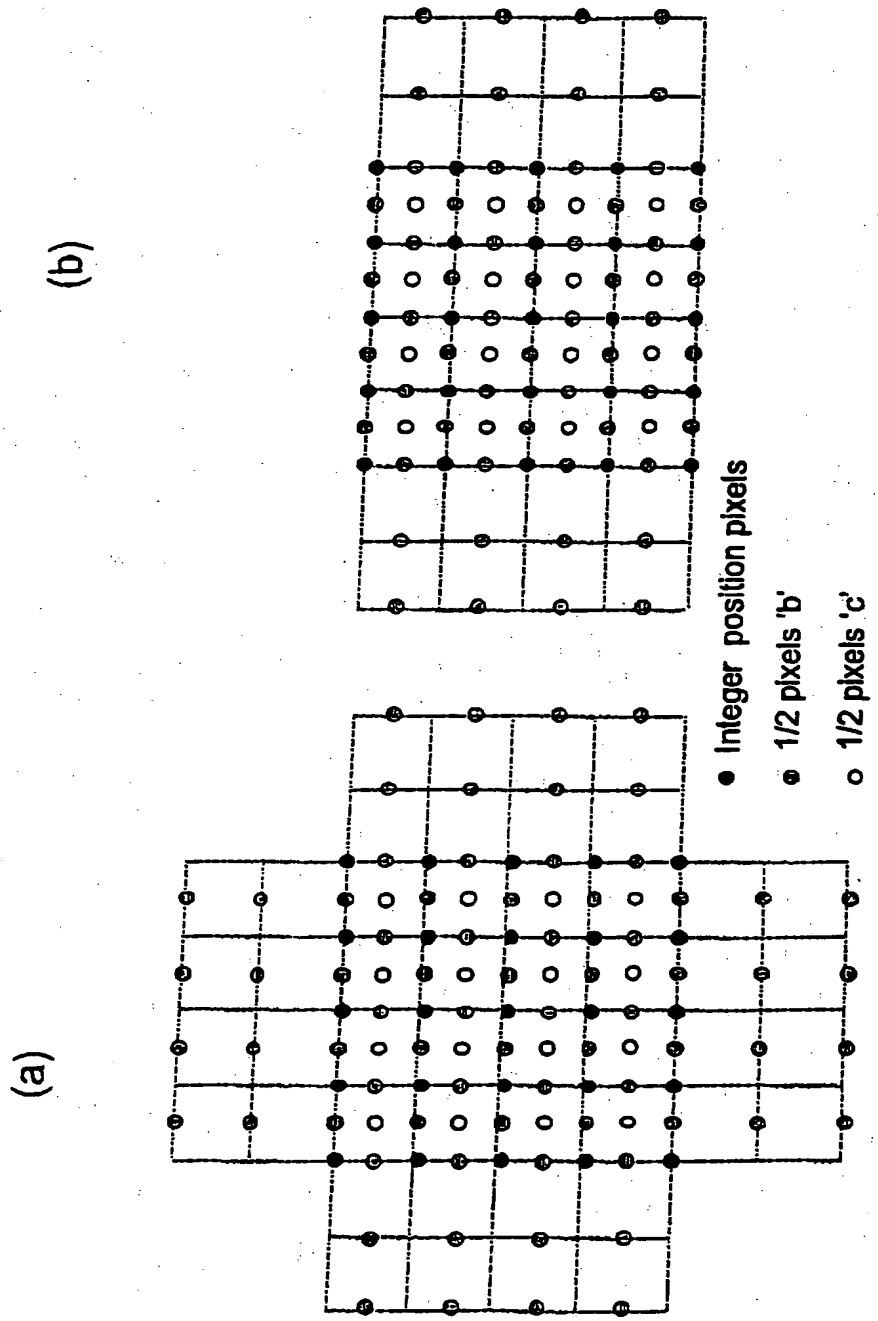

Fig. 17

(a)

(b)

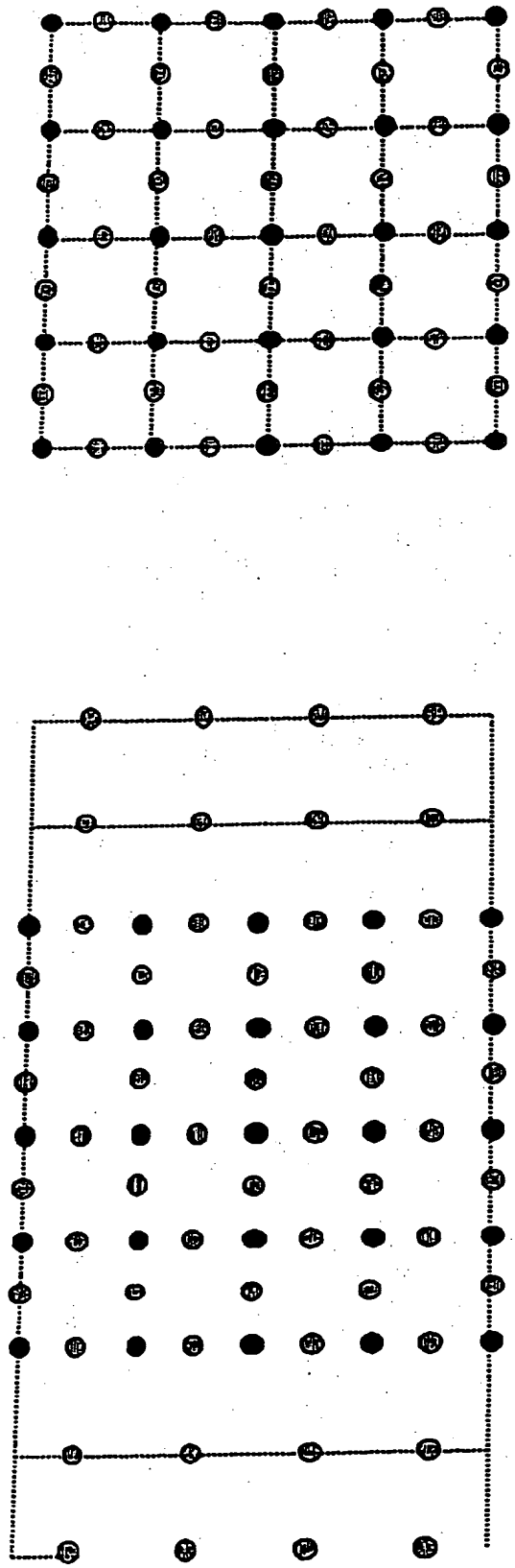

● Integer position pixels

1/2 pixels 'b'

Fig. 18

1	2	3	4
5	6	7	8
9	10	11	12
13	14	15	16

Fig. 19

A	d	b^1	d	b^2	d	b^3	d	A
d	e	d	f	d	f	d	e	
b^1	d	c^{11}	d	c^{12}	d	c^{13}	d	
d	f	d	g	d	g	d	f	
b^2	d	c^{21}	d	c^{22}	d	c^{23}	d	
d	f	d	g	d	g	d	e	
b^3	d	c^{31}	d	c^{32}	d	c^{33}	d	
d	e	d	f	d	f	d	e	
A								

Figure 20

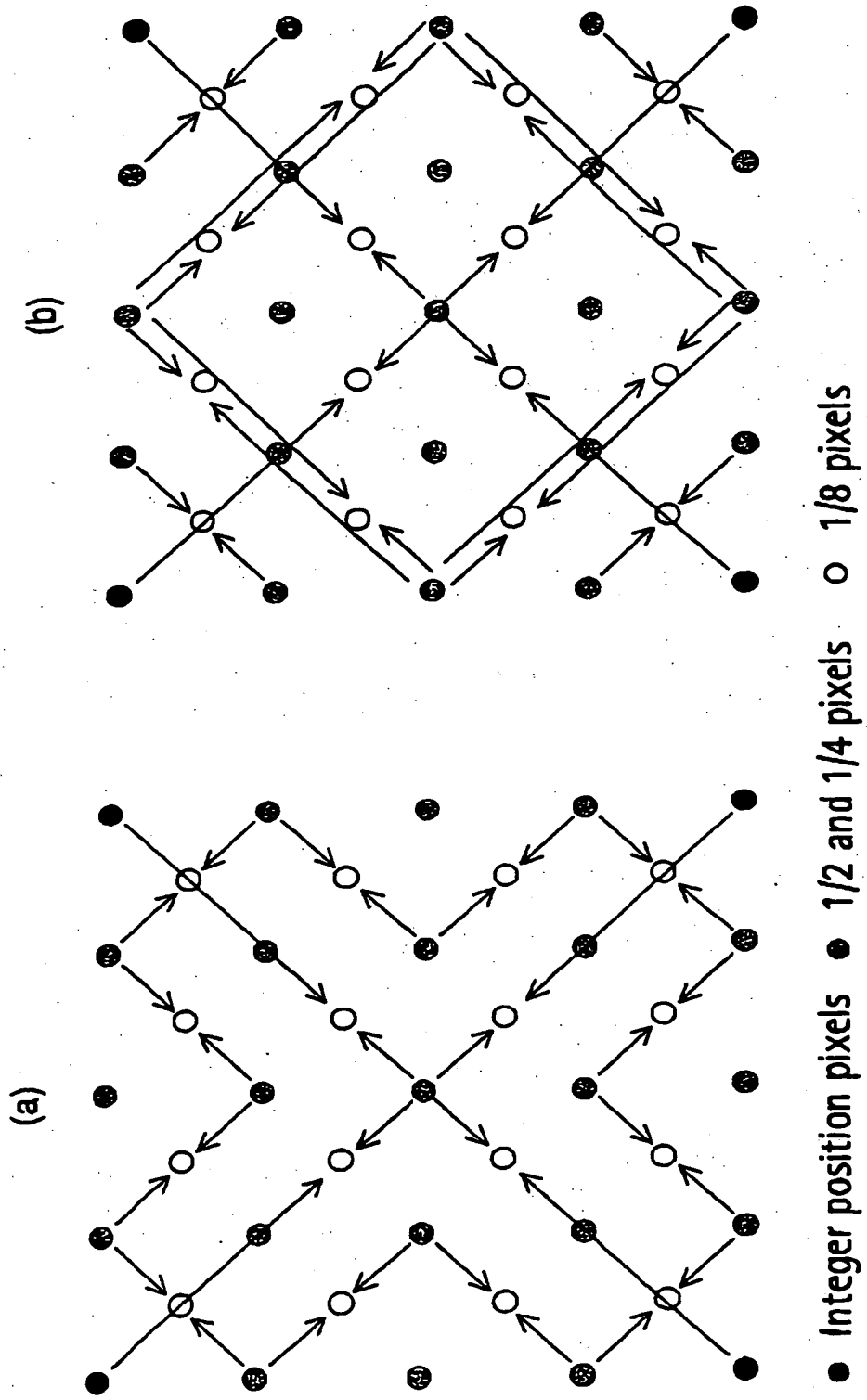

Fig. 21

1	2	3	4	5	6	7	8
9	10	11	12	13	14	15	16
17	18	19	20	21	22	23	24
25	26	27	28	29	30	31	32
33	34	35	36	37	38	39	40
41	42	43	44	45	46	47	48
49	50	51	52	53	54	55	56
57	58	59	60	61	62	63	64

Fig. 22

UNITED STATES PATENT AND TRADEMARK OFFICE

UNITED STATES DEPARTMENT OF COMMERCE
United States Patent and Trademark Office
Address: COMMISSIONER FOR PATENTS
P.O. Box 1450
Alexandria, Virginia 22313-1450
www.uspto.gov

APPLICATION NUMBER	FILING OR 371 (c) DATE	FIRST NAMED APPLICANT	ATTORNEY DOCKET NUMBER
11/090,717	03/25/2005	Marta Karczewicz	442-010567-US (C01)

CONFIRMATION NO. 6454

Perman & Green
425 Post Road
Fairfield, CT 06430-6232

FORMALITIES LETTER

OC000000015908151

Date Mailed: 05/02/2005

NOTICE TO FILE CORRECTED APPLICATION PAPERS

Filing Date Granted

An application number and filing date have been accorded to this application. The application is informal since it does not comply with the regulations for the reason(s) indicated below. Applicant is given TWO MONTHS from the date of this Notice within which to correct the informalities indicated below. Extensions of time may be obtained by filing a petition accompanied by the extension fee under the provisions of 37 CFR 1.136(a).

The required item(s) identified below must be timely submitted to avoid abandonment:

- Replacement drawings in compliance with 37 CFR 1.84 and 37 CFR 1.121(d) are required. The drawings submitted are not acceptable because:
    - The drawing sheets do not have the appropriate margin(s) (see 37 CFR 1.84(g)). Each sheet must include a top margin of at least 2.5 cm. (1 inch), a left side margin of at least 2.5 cm. (1 inch), a right side margin of at least 1.5 cm. (5/8 inch), and a bottom margin of at least 1.0 cm. (3/8 inch).See Figures(s) 14c.

The following item(s) appear to have been **omitted** from the application:

- Figure(s) **9,10** described in the specification.

I. Should applicant contend that the above-noted omitted item(s) was in fact deposited in the U.S. Patent and Trademark Office (USPTO) with the nonprovisional application papers, a copy of this Notice and a petition (and $400.00 petition fee *(37 CFR 1.17(f))*) with evidence of such deposit **must** be filed within **TWO MONTHS** of the date of this Notice. The petition fee will be refunded if is determined that the item(s) was received by the USPTO.

II. Should applicant desire to supply the omitted item(s) and accept the date that such omitted item(s) was filed in the USPTO as the filing date of the above-identified application, a copy of this Notice, the omitted item(s) (with a supplemental oath or declaration in compliance with 37 CFR 1.63 and 1.64 referring to such items), and a petition under 37 CFR 1.182 (with the $400.00 petition fee *(37 CFR 1.17(f))* requesting the later filing date **must** be filed within **TWO MONTHS** of the date of this Notice.

Applicant is advised that generally the filing fee required for an application is the filing fee in effect on the filing date accorded the application and that payment of the requisite basic filing fee on a date later than the filing date of the application requires payment of a surcharge (37 CFR 1.16(f)). To avoid processing delays and payment of a surcharge, applicant should submit any balance due for the requisite filing fee based on the later filing date being requested when submitting the omitted items(s) and the petition (and petition fee) requesting the later filing

date.

III. The failure to file a petition (and petition fee) under the above options (I) or (II) within **TWO MONTHS** of the date of this Notice (37 CFR 1.181(f)) will be treated as a constructive acceptance by the applicant of the application as deposited in the USPTO. **THIS TWO MONTH PERIOD IS NOT EXTENDABLE UNDER 37 CFR 1.136(a) or (b)**. In the absence of a timely filed petition in reply to this Notice, the application will maintain a filing date as of the date of deposit of the application papers in the USPTO, and original application papers (*i.e.*, the original disclosure of the invention) will include only those application papers present in the USPTO on the date of deposit.

In the event that applicant elects not to take action pursuant to options (I) or (II) above (thereby constructively electing option (III)), amendment of the specification to renumber the pages consecutively and cancel incomplete sentences caused by any omitted page(s), and/or amendment of the specification to cancel all references to any omitted drawing(s), relabel the drawing figures to be numbered consecutively (if necessary), and correct the references in the specification to the drawing figures to correspond with any relabeled drawing figures, is required. A copy of the drawing figures showing the proposed changes in red ink should accompany with any drawing changes . Such amendment and/or correction to the drawing figures, if necessary, should be by way of preliminary amendment submitted prior to the first Office action to avoid delays in the prosecution of the application.

Applicant is cautioned that correction of the above items may cause the specification and drawings page count to exceed 100 pages. If the specification and drawings exceed 100 pages, applicant will need to submit the required application size fee.

Replies should be mailed to: Mail Stop Missing Parts
Commissioner for Patents
P.O. Box 1450
Alexandria VA 22313-1450

A copy of this notice MUST be returned with the reply.

Melvo non

Office of Initial Patent Examination (703) 308-1202

PART 3 - OFFICE COPY

Express Mail Label No. EV 327710903 US

17114 U.S. PTO
032505

UTILITY PATENT APPLICATION TRANSMITTAL
(Large Entity)

(Only for new nonprovisional applications under 37 CFR 1.53(b))

Docket No.
442-010567-US (C01)

Total Pages in this Submission
4

COMMISSIONER FOR PATENTS
P.O. Box 1450
Alexandria, VA 22313-1450

Transmitted herewith for filing under 35 U.S.C. 111(a) and 37 C.F.R. 1.53(b) is a new utility patent application for an invention entitled:

METHOD FOR SUB-PIXELVALUE INTERPOLATION

113268 U.S. PTO
11/090717
032505

and invented by:

Marta Karczewicz; Antti Hallapuro

If a CONTINUATION APPLICATION, *check appropriate box and supply the requisite information:*

☒ **Continuation** ☐ **Divisional** ☐ **Continuation-in-part (CIP)** of prior application No.: **09/954,608**

Which is a:

☐ **Continuation** ☐ **Divisional** ☐ **Continuation-in-part (CIP)** of prior application No.: _____

Which is a:

☐ **Continuation** ☐ **Divisional** ☐ **Continuation-in-part (CIP)** of prior application No.: _____

Enclosed are:

Application Elements

1. ☒ Filing fee as calculated and transmitted as described below
2. ☒ Specification having 99 pages and including the following:
   - a. ☒ Descriptive Title of the Invention
   - b. ☐ Cross References to Related Applications *(if applicable)*
   - c. ☐ Statement Regarding Federally-sponsored Research/Development *(if applicable)*
   - d. ☐ Reference to Sequence Listing, a Table, or a Computer Program Listing Appendix
   - e. ☒ Background of the Invention
   - f. ☒ Brief Summary of the Invention
   - g. ☒ Brief Description of the Drawings *(if filed)*
   - h. ☒ Detailed Description
   - i. ☒ Claim(s) as Classified Below
   - j. ☒ Abstract of the Disclosure

Patent Owner's Exhibit 2003, p. 131
Amazon et al v. Nokia
IPR2024-01139

UTILITY PATENT APPLICATION TRANSMITTAL
(Large Entity)

(Only for new nonprovisional applications under 37 CFR 1.53(b))

Docket No.
442-010567-US (C01)

Total Pages in this Submission
4

Application Elements (Continued)

3. ☒ Drawing(s) *(when necessary as prescribed by 35 USC 113)*
   a. ☒ Formal Number of Sheets 26
   b. ☐ Informal Number of Sheets _____
4. ☒ Oath or Declaration
   a. ☐ Newly executed *(original or copy)* ☐ Unexecuted
   b. ☒ Copy from a prior application (37 CFR 1.63(d)) *(for continuation/divisional application only)*
   c. ☐ With Power of Attorney ☐ Without Power of Attorney
   d. ☐ *DELETION OF INVENTOR(S)*
   Signed statement attached deleting inventor(s) named in the prior application, see 37 C.F.R. 1.63(d)(2) and 1.33(b).
5. ☐ Incorporation By Reference *(usable if Box 4b is checked)*
   The entire disclosure of the prior application, from which a copy of the oath or declaration is supplied under Box 4b, is considered as being part of the disclosure of the accompanying application and is hereby incorporated by reference therein.
6. ☐ CD ROM or CD-R in duplicate, large table or Computer Program (Appendix)
7. ☐ Application Data Sheet (See 37 CFR 1.76)
8. ☐ Nucleotide and/or Amino Acid Sequence Submission *(if applicable, all must be included)*
   a. ☐ Computer Readable Form (CRF)
   b. ☐ Specification Sequence Listing on:
      i. ☐ CD-ROM or CD-R (2 copies); or
      ii. ☐ Paper
   c. ☐ Statement(s) Verifying Identical Paper and Computer Readable Copy

Accompanying Application Parts

9. ☐ Assignment Papers *(cover sheet & document(s))*
10. ☐ 37 CFR 3.73(B) Statement *(when there is an assignee)*
11. ☐ English Translation Document *(if applicable)*
12. ☐ Information Disclosure Statement/PTO-1449 ☐ Copies of IDS Citations
13. ☐ Preliminary Amendment
14. ☒ Return Receipt Postcard (MPEP 503) *(Should be specifically itemized)*
15. ☐ Certified Copy of Priority Document(s) *(if foreign priority is claimed)*
16. ☒ Certificate of Mailing
    ☐ First Class ☒ Express Mail *(Specify Label No.)*: EV 327710903 US

Patent Owner's Exhibit 2003, p. 132
Amazon et al v. Nokia
IPR2024-01139

UTILITY PATENT APPLICATION TRANSMITTAL (Large Entity) *(Only for new nonprovisional applications under 37 CFR 1.53(b))*	Docket No. 442-010567-US (C01)
	Total Pages in this Submission 4

Accompanying Application Parts (Continued)

17. ☐ Additional Enclosures *(please identify below):*

Request That Application Not Be Published Pursuant To 35 U.S.C. 122(b)(2)

18. ☐ Pursuant to 35 U.S.C. 122(b)(2), Applicant hereby requests that this patent application not be published pursuant to 35 U.S.C. 122(b)(1). Applicant hereby certifies that the invention disclosed in this application has not and will not be the subject of an application filed in another country, or under a multilateral international agreement, that requires publication of applications 18 months after filing of the application.

Warning

An applicant who makes a request not to publish, but who subsequently files in a foreign country or under a multilateral international agreement specified in 35 U.S.C. 122(b)(2)(B)(i), must notify the Director of such filing not later than 45 days after the date of the filing of such foreign or international application. A failure of the applicant to provide such notice within the prescribed period shall result in the application being regarded as abandoned, unless it is shown to the satisfaction of the Director that the delay in submitting the notice was unintentional.

Patent Owner's Exhibit 2003, p. 133
Amazon et al v. Nokia
IPR2024-01139

UTILITY PATENT APPLICATION TRANSMITTAL
(Large Entity)

(Only for new nonprovisional applications under 37 CFR 1.53(b))

Docket No.
442-010567-US (C01)

Total Pages in this Submission
4

Fee Calculation and Transmittal

CLAIMS AS FILED						
For	#Filed	#Allowed	#Extra		Rate	Fee
Total Claims	20	- 20 =	0	x	$18.00	$0.00
Indep. Claims	3	- 3 =	0	x	$88.00	$0.00
Multiple Dependent Claims (check if applicable) ☐						$0.00
Total # of Pages in Specification	99	Total # of Drawing Sheets	26			
Total # of Sheets	125				Application Size Fee	$250.00
					Basic Fee	$300.00
					Search Fee	$500.00
					Examination Fee	$200.00
OTHER FEE *(specify purpose)*						
					TOTAL FILING FEE	$1,250.00

☒ A check in the amount of **$1,250.00** to cover the filing fee is enclosed.

☒ The Director is hereby authorized to charge and credit Deposit Account No. **16-1350** as described below.

- ☐ Charge the amount of as filing fee.
- ☒ Credit any overpayment.
- ☐ Charge any additional filing fees required under 37 C.F.R. 1.16 and 1.17.
- ☐ Charge the issue fee set in 37 C.F.R. 1.18 at the mailing of the Notice of Allowance, pursuant to 37 C.F.R. 1.311(b).

☐ Payment by credit card. Form PTO-2038 is attached.

WARNING: Information on this form may become public. Credit card information should not be included on this form. Provide credit card information and authorization on PTO-2038.

Signature

Geza C. Ziegler, Jr.
Registration No. 44,004

Dated: 25 MARCH 2005

Customer Number: **2512**

cc: **Customer No. 2512**

Patent Owner's Exhibit 2003, p. 134
Amazon et al v. Nokia
IPR2024-01139

CERTIFICATE OF MAILING BY "EXPRESS MAIL" (37 CFR 1.10) Applicant(s): **Karczewicz et al.**			Docket No. **442-010567-US (C01)**	
Application No.	Filing Date **Herewith**	Examiner	Customer No. **2512**	Group Art Unit

Invention:

METHOD FOR SUB-PIXEL VALUE INTERPOLATION

I hereby certify that the following correspondence:

Utility Patent Application Transmittal; Preliminary Amendment; Information Disclosure Statement; Form PTO-1449; Application; Declaration; Postcard; Check

(Identify type of correspondence)

is being deposited with the United States Postal Service "Express Mail Post Office to Addressee" service under 37 CFR 1.10 in an envelope addressed to: Commissioner for Patents, P.O. Box 1450, Alexandria, VA 22313-1450 on 3-25-05

(Date)

Debra Conrad

(Typed or Printed Name of Person Mailing Correspondence)

Debra Conrad

(Signature of Person Mailing Correspondence)

EV 327710903 US

("Express Mail" Mailing Label Number)

Note: Each paper must have its own certificate of mailing.

Express Mail Label No. EV 327710903 US

17114 U.S. PTO
032505

UTILITY PATENT APPLICATION TRANSMITTAL
(Large Entity)

(Only for new nonprovisional applications under 37 CFR 1.53(b))

Docket No.
442-010567-US (C01)

Total Pages in this Submission
4

COMMISSIONER FOR PATENTS
P.O. Box 1450
Alexandria, VA 22313-1450

Transmitted herewith for filing under 35 U.S.C. 111(a) and 37 C.F.R. 1.53(b) is a new utility patent application for an invention entitled:

METHOD FOR SUB-PIXELVALUE INTERPOLATION

113268 U.S. PTO
11/090717
032505

and invented by:

Marta Karczewicz; Antti Hallapuro

If a CONTINUATION APPLICATION, *check appropriate box and supply the requisite information:*

☒ **Continuation** ☐ **Divisional** ☐ **Continuation-in-part (CIP)** of prior application No.: **09/954,608**

Which is a:

☐ **Continuation** ☐ **Divisional** ☐ **Continuation-in-part (CIP)** of prior application No.: _____

Which is a:

☐ **Continuation** ☐ **Divisional** ☐ **Continuation-in-part (CIP)** of prior application No.: _____

Enclosed are:

Application Elements

1. ☒ Filing fee as calculated and transmitted as described below
2. ☒ Specification having 99 pages and including the following:
   - a. ☒ Descriptive Title of the Invention
   - b. ☐ Cross References to Related Applications *(if applicable)*
   - c. ☐ Statement Regarding Federally-sponsored Research/Development *(if applicable)*
   - d. ☐ Reference to Sequence Listing, a Table, or a Computer Program Listing Appendix
   - e. ☒ Background of the Invention
   - f. ☒ Brief Summary of the Invention
   - g. ☒ Brief Description of the Drawings *(if filed)*
   - h. ☒ Detailed Description
   - i. ☒ Claim(s) as Classified Below
   - j. ☒ Abstract of the Disclosure

Patent Owner's Exhibit 2003, p. 136
Amazon et al v. Nokia
IPR2024-01139

UTILITY PATENT APPLICATION TRANSMITTAL
(Large Entity)

(Only for new nonprovisional applications under 37 CFR 1.53(b))

Docket No.
442-010567-US (C01)

Total Pages in this Submission
4

Application Elements (Continued)

3. ☒ Drawing(s) *(when necessary as prescribed by 35 USC 113)*
   a. ☒ Formal Number of Sheets 26
   b. ☐ Informal Number of Sheets _____
4. ☒ Oath or Declaration
   a. ☐ Newly executed *(original or copy)* ☐ Unexecuted
   b. ☒ Copy from a prior application (37 CFR 1.63(d)) *(for continuation/divisional application only)*
   c. ☐ With Power of Attorney ☐ Without Power of Attorney
   d. ☐ *DELETION OF INVENTOR(S)*
   Signed statement attached deleting inventor(s) named in the prior application, see 37 C.F.R. 1.63(d)(2) and 1.33(b).
5. ☐ Incorporation By Reference *(usable if Box 4b is checked)*
   The entire disclosure of the prior application, from which a copy of the oath or declaration is supplied under Box 4b, is considered as being part of the disclosure of the accompanying application and is hereby incorporated by reference therein.
6. ☐ CD ROM or CD-R in duplicate, large table or Computer Program (Appendix)
7. ☐ Application Data Sheet (See 37 CFR 1.76)
8. ☐ Nucleotide and/or Amino Acid Sequence Submission *(if applicable, all must be included)*
   a. ☐ Computer Readable Form (CRF)
   b. ☐ Specification Sequence Listing on:
      i. ☐ CD-ROM or CD-R (2 copies); or
      ii. ☐ Paper
   c. ☐ Statement(s) Verifying Identical Paper and Computer Readable Copy

Accompanying Application Parts

9. ☐ Assignment Papers *(cover sheet & document(s))*
10. ☐ 37 CFR 3.73(B) Statement *(when there is an assignee)*
11. ☐ English Translation Document *(if applicable)*
12. ☐ Information Disclosure Statement/PTO-1449 ☐ Copies of IDS Citations
13. ☐ Preliminary Amendment
14. ☒ Return Receipt Postcard (MPEP 503) *(Should be specifically itemized)*
15. ☐ Certified Copy of Priority Document(s) *(if foreign priority is claimed)*
16. ☒ Certificate of Mailing
    ☐ First Class ☒ Express Mail *(Specify Label No.)*: EV 327710903 US

Patent Owner's Exhibit 2003, p. 137
Amazon et al v. Nokia
IPR2024-01139

UTILITY PATENT APPLICATION TRANSMITTAL
(Large Entity)

(Only for new nonprovisional applications under 37 CFR 1.53(b))

Docket No.
442-010567-US (C01)

Total Pages in this Submission
4

Accompanying Application Parts (Continued)

17. ☐ Additional Enclosures *(please identify below):*

Request That Application Not Be Published Pursuant To 35 U.S.C. 122(b)(2)

18. ☐ Pursuant to 35 U.S.C. 122(b)(2), Applicant hereby requests that this patent application not be published pursuant to 35 U.S.C. 122(b)(1). Applicant hereby certifies that the invention disclosed in this application has not and will not be the subject of an application filed in another country, or under a multilateral international agreement, that requires publication of applications 18 months after filing of the application.

Warning

An applicant who makes a request not to publish, but who subsequently files in a foreign country or under a multilateral international agreement specified in 35 U.S.C. 122(b)(2)(B)(i), must notify the Director of such filing not later than 45 days after the date of the filing of such foreign or international application. A failure of the applicant to provide such notice within the prescribed period shall result in the application being regarded as abandoned, unless it is shown to the satisfaction of the Director that the delay in submitting the notice was unintentional.

Patent Owner's Exhibit 2003, p. 138
Amazon et al v. Nokia
IPR2024-01139

UTILITY PATENT APPLICATION TRANSMITTAL
(Large Entity)

(Only for new nonprovisional applications under 37 CFR 1.53(b))

Docket No.
442-010567-US (C01)

Total Pages in this Submission
4

Fee Calculation and Transmittal

CLAIMS AS FILED						
For	#Filed	#Allowed	#Extra		Rate	Fee
Total Claims	20	- 20 =	0	x	$18.00	$0.00
Indep. Claims	3	- 3 =	0	x	$88.00	$0.00
Multiple Dependent Claims (check if applicable) ☐						$0.00
Total # of Pages in Specification	99	Total # of Drawing Sheets	26			
Total # of Sheets	125				Application Size Fee	$250.00
					Basic Fee	$300.00
					Search Fee	$500.00
					Examination Fee	$200.00
OTHER FEE *(specify purpose)*						
					TOTAL FILING FEE	$1,250.00

☒ A check in the amount of **$1,250.00** to cover the filing fee is enclosed.

☒ The Director is hereby authorized to charge and credit Deposit Account No. **16-1350** as described below.

- ☐ Charge the amount of as filing fee.
- ☒ Credit any overpayment.
- ☐ Charge any additional filing fees required under 37 C.F.R. 1.16 and 1.17.
- ☐ Charge the issue fee set in 37 C.F.R. 1.18 at the mailing of the Notice of Allowance, pursuant to 37 C.F.R. 1.311(b).

☐ Payment by credit card. Form PTO-2038 is attached.

WARNING: Information on this form may become public. Credit card information should not be included on this form. Provide credit card information and authorization on PTO-2038.

Signature

Geza C. Ziegler, Jr.
Registration No. 44,004

Dated: 25 MARCH 2005

Customer Number: **2512**

cc: **Customer No. 2512**

Patent Owner's Exhibit 2003, p. 139
Amazon et al v. Nokia
IPR2024-01139

CERTIFICATE OF MAILING BY "EXPRESS MAIL" (37 CFR 1.10) Applicant(s): **Karczewicz et al.**			Docket No. **442-010567-US (C01)**	
Application No.	Filing Date **Herewith**	Examiner	Customer No. **2512**	Group Art Unit

Invention:

METHOD FOR SUB-PIXEL VALUE INTERPOLATION

I hereby certify that the following correspondence:

Utility Patent Application Transmittal; Preliminary Amendment; Information Disclosure Statement; Form PTO-1449; Application; Declaration; Postcard; Check

(Identify type of correspondence)

is being deposited with the United States Postal Service "Express Mail Post Office to Addressee" service under 37 CFR 1.10 in an envelope addressed to: Commissioner for Patents, P.O. Box 1450, Alexandria, VA 22313-1450 on 3-25-05

(Date)

Debra Conrad

(Typed or Printed Name of Person Mailing Correspondence)

Debra Conrad

(Signature of Person Mailing Correspondence)

EV 327710903 US

("Express Mail" Mailing Label Number)

Note: Each paper must have its own certificate of mailing.

METHOD FOR SUB-PIXEL VALUE INTERPOLATION

The present invention relates to a method for sub-pixel value interpolation in the encoding and decoding of data. It relates particularly, but not exclusively, to encoding and decoding of digital video.

Background of the invention

Digital video sequences, like ordinary motion pictures recorded on film, comprise a sequence of still images, the illusion of motion being created by displaying the images one after the other at a relatively fast frame rate, typically 15 to 30 frames per second. Because of the relatively fast frame rate, images in consecutive frames tend to be quite similar and thus contain a considerable amount of redundant information. For example, a typical scene may comprise some stationary elements, such as background scenery, and some moving areas, which may take many different forms, for example the face of a newsreader, moving traffic and so on. Alternatively, the camera recording the scene may itself be moving, in which case all elements of the image have the same kind of motion. In many cases, this means that the overall change between one video frame and the next is rather small. Of course, this depends on the nature of the movement. For example, the faster the movement, the greater the change from one frame to the next. Similarly, if a scene contains a number of moving elements, the change from one frame to the next is likely to be greater than in a scene where only one element is moving.

It should be appreciated that each frame of a raw, that is uncompressed, digital video sequence comprises a very large amount of image information. Each frame of an uncompressed digital video sequence is formed from an array of image pixels. For example, in a commonly used digital video format, known as the Quarter Common Interchange Format (QCIF), a frame

Patent Owner's Exhibit 2003, p. 141
Amazon et al v. Nokia
IPR2024-01139

comprises an array of 176 x 144 pixels, in which case each frame has 25,344 pixels. In turn, each pixel is represented by a certain number of bits, which carry information about the luminance and/or colour content of the region of the image corresponding to the pixel. Commonly, a so-called YUV colour model is used to represent the luminance and chrominance content of the image. The luminance, or Y, component represents the intensity (brightness) of the image, while the colour content of the image is represented by two chrominance components, labelled U and V.

Colour models based on a luminance/chrominance representation of image content provide certain advantages compared with colour models that are based on a representation involving primary colours (that is Red, Green and Blue, RGB). The human visual system is more sensitive to intensity variations than it is to colour variations; YUV colour models exploit this property by using a lower spatial resolution for the chrominance components (U, V) than for the luminance component (Y). In this way the amount of information needed to code the colour information in an image can be reduced with an acceptable reduction in image quality.

The lower spatial resolution of the chrominance components is usually attained by sub-sampling. Typically, a block of 16x16 image pixels is represented by one block of 16x16 pixels comprising luminance information and the corresponding chrominance components are each represented by one block of 8x8 pixels representing an area of the image equivalent to that of the 16x16 pixels of the luminance component. The chrominance components are thus spatially sub-sampled by a factor of 2 in the *x* and *y* directions. The resulting assembly of one 16x16 pixel luminance block and two 8x8 pixel chrominance blocks is commonly referred to as a YUV macroblock, or macroblock, for short.

A QCIF image comprises 11x9 macroblocks. If the luminance blocks and chrominance blocks are represented with 8 bit resolution (that is by numbers in the range 0 to 255), the total number of bits required per macroblock is (16x16x8)+2x(8x8x8) = 3072 bits. The number of bits needed to represent a video frame in QCIF format is thus 99x3072 = 304,128 bits. This means that the amount of data required to transmit/record/display a video sequence in QCIF format, represented using a YUV colour model, at a rate of 30 frames per second, is more than 9 Mbps (million bits per second). This is an extremely high data rate and is impractical for use in video recording, transmission and display applications because of the very large storage capacity, transmission channel capacity and hardware performance required.

If video data is to be transmitted in real-time over a fixed line network such as an ISDN (Integrated Services Digital Network) or a conventional PSTN (Public Service Telephone Network), the available data transmission bandwidth is typically of the order of 64kbits/s. In mobile videotelephony, where transmission takes place at least in part over a radio communications link, the available bandwidth can be as low as 20kbits/s. This means that a significant reduction in the amount of information used to represent video data must be achieved in order to enable transmission of digital video sequences over low bandwidth communication networks. For this reason video compression techniques have been developed which reduce the amount of information transmitted while retaining an acceptable image quality.

Video compression methods are based on reducing the redundant and perceptually irrelevant parts of video sequences. The redundancy in video sequences can be categorised into spatial, temporal and spectral redundancy. 'Spatial redundancy' is the term used to describe the correlation between neighbouring pixels within a frame. The term 'temporal

Patent Owner's Exhibit 2003, p. 143
Amazon et al v. Nokia
IPR2024-01139

redundancy' expresses the fact that the objects appearing in one frame of a sequence are likely to appear in subsequent frames, while 'spectral redundancy' refers to the correlation between different colour components of the same image.

Sufficiently efficient compression cannot usually be achieved by simply reducing the various forms of redundancy in a given sequence of images. Thus, most current video encoders also reduce the quality of those parts of the video sequence which are subjectively the least important. In addition, the redundancy of the compressed video bit-stream is itself reduced by means of efficient loss-less encoding. Typically, this is achieved using a technique known as 'variable length coding' (VLC).

Modern video compression standards, such as ITU-T recommendations H.261, H.263(+)(++), H.26L and the Motion Picture Experts Group recommendation MPEG-4 make use of 'motion compensated temporal prediction'. This is a form of temporal redundancy reduction in which the content of some (often many) frames in a video sequence is 'predicted' from other frames in the sequence by tracing the motion of objects or regions of an image between frames.

Compressed images which do not make use of temporal redundancy reduction are usually called INTRA-coded or I-frames, whereas temporally predicted images are called INTER-coded or P-frames. In the case of INTER frames, the predicted (motion-compensated) image is rarely precise enough to represent the image content with sufficient quality, and therefore a spatially compressed prediction error (PE) frame is also associated with each INTER frame. Many video compression schemes can also make use of bi-directionally predicted frames, which are commonly referred to as B-pictures or B-frames. B-pictures are inserted between reference or so-called 'anchor' picture pairs (I or P frames) and are predicted from either one or

Patent Owner's Exhibit 2003, p. 144
Amazon et al v. Nokia
IPR2024-01139

both of the anchor pictures. B-pictures are not themselves used as anchor pictures, that is no other frames are predicted from them, and therefore, they can be discarded from the video sequence without causing deterioration in the quality of future pictures.

The different types of frame that occur in a typical compressed video sequence are illustrated in Figure 3 of the accompanying drawings. As can be seen from the figure, the sequence starts with an INTRA or I frame 30. In Figure 3, arrows 33 denote the 'forward' prediction process by which P-frames (labelled 34) are formed. The bi-directional prediction process by which B-frames (36) are formed is denoted by arrows 31a and 31b, respectively.

A schematic diagram of an example video coding system using motion compensated prediction is shown in Figures 1 and 2. Figure 1 illustrates an encoder 10 employing motion compensation and Figure 2 illustrates a corresponding decoder 20. The encoder 10 shown in Figure 1 comprises a Motion Field Estimation block 11, a Motion Field Coding block 12, a Motion Compensated Prediction block 13, a Prediction Error Coding block 14, a Prediction Error Decoding block 15, a Multiplexing block 16, a Frame Memory 17, and an adder 19. The decoder 20 comprises a Motion Compensated Prediction block 21, a Prediction Error Decoding block 22, a Demultiplexing block 23 and a Frame Memory 24.

The operating principle of video coders using motion compensation is to minimise the amount of information in a prediction error frame $E_n(x,y)$, which is the difference between a current frame $I_n(x,y)$ being coded and a prediction frame $P_n(x,y)$. The prediction error frame is thus:

$$E_n(x,y) = I_n(x,y) - P_n(x,y). \quad (1)$$

Patent Owner's Exhibit 2003, p. 145
Amazon et al v. Nokia
IPR2024-01139

The prediction frame $P_n(x,y)$ is built using pixel values of a reference frame $R_n(x,y)$, which is generally one of the previously coded and transmitted frames, for example the frame immediately preceding the current frame and is available from the Frame Memory 17 of the encoder 10. More specifically, the prediction frame $P_n(x,y)$ is constructed by finding so-called 'prediction pixels' in the reference frame $R_n(x,y)$ which correspond substantially with pixels in the current frame. Motion information, describing the relationship (e.g. relative location, rotation, scale etc.) between pixels in the current frame and their corresponding prediction pixels in the reference frame is derived and the prediction frame is constructed by moving the prediction pixels according to the motion information. In this way, the prediction frame is constructed as an approximate representation of the current frame, using pixel values in the reference frame. The prediction error frame referred to above therefore represents the difference between the approximate representation of the current frame provided by the prediction frame and the current frame itself. The basic advantage provided by video encoders that use motion compensated prediction arises from the fact that a comparatively compact description of the current frame can be obtained by representing it in terms of the motion information required to form its prediction together with the associated prediction error information in the prediction error frame.

However, due to the very large number of pixels in a frame, it is generally not efficient to transmit separate motion information for each pixel to the decoder. Instead, in most video coding schemes, the current frame is divided into larger image segments S_k and motion information relating to the segments is transmitted to the decoder. For example, motion information is typically provided for each macroblock of a frame and the same motion information is then used for all pixels within the macroblock. In some video coding standards, such as H.26L, a macroblock can be divided into smaller blocks, each smaller block being provided with its own motion information

Patent Owner's Exhibit 2003, p. 146
Amazon et al v. Nokia
IPR2024-01139

The motion information usually takes the form of motion vectors $[\Delta x(x,y), \Delta y(x,y)]$. The pair of numbers $\Delta x(x,y)$ and $\Delta y(x,y)$ represents the horizontal and vertical displacements of a pixel at location (x,y) in the current frame $I_n(x,y)$ with respect to a pixel in the reference frame $R_n(x,y)$. The motion vectors $[\Delta x(x,y), \Delta y(x,y)]$ are calculated in the Motion Field Estimation block 11 and the set of motion vectors of the current frame $[\Delta x(\cdot), \Delta y(\cdot)]$ is referred to as the motion vector field.

Typically, the location of a macroblock in a current video frame is specified by the (x,y) co-ordinate of its upper left-hand corner. Thus, in a video coding scheme in which motion information is associated with each macroblock of a frame, each motion vector describes the horizontal and vertical displacement $\Delta x(x,y)$ and $\Delta y(x,y)$ of a pixel representing the upper left-hand corner of a macroblock in the current frame $I_n(x,y)$ with respect to a pixel in the upper left-hand corner of a substantially corresponding block of prediction pixels in the reference frame $R_n(x,y)$ (as shown in Figure 4b).

Motion estimation is a computationally intensive task. Given a reference frame $R_n(x,y)$ and, for example, a square macroblock comprising N x N pixels in a current frame (as shown in Figure 4a), the objective of motion estimation is to find an N x N pixel block in the reference frame that matches the characteristics of the macroblock in the current picture according to some criterion. This criterion can be, for example, a sum of absolute differences (SAD) between the pixels of the macroblock in the current frame and the block of pixels in the reference frame with which it is compared. This process is known generally as 'block matching'. It should be noted that, in general, the geometry of the block to be matched and that in the reference frame do not have to be the same, as real-world objects can undergo scale changes, as well as rotation and warping. However, in

Patent Owner's Exhibit 2003, p. 147
Amazon et al v. Nokia
IPR2024-01139

current international video coding standards, only a translational motion model is used (see below) and thus fixed rectangular geometry is sufficient.

Ideally, in order to achieve the best chance of finding a match, the whole of the reference frame should be searched. However, this is impractical as it imposes too high a computational burden on the video encoder. Instead, the search region is restricted to region $[-p,p]$ around the original location of the macroblock in the current frame, as shown in Figure 4c.

In order to reduce the amount of motion information to be transmitted from the encoder 10 to the decoder 20, the motion vector field is coded in the Motion Field Coding block 12 of the encoder 10, by representing it with a motion model. In this process, the motion vectors of image segments are re-expressed using certain predetermined functions or, in other words, the motion vector field is represented with a model. Almost all currently used motion vector field models are additive motion models, complying with the following general formula:

$$\Delta x(x,y) = \sum_{i=0}^{N-1} a_i f_i(x,y) \tag{2}$$

$$\Delta y(x,y) = \sum_{i=0}^{M-1} b_i g_i(x,y) \tag{3}$$

where coefficients a_i and b_i are called motion coefficients. The motion coefficients are transmitted to the decoder 20 (information stream 2 in Figures 1 and 2). Functions f_i and g_i are called motion field basis functions, and are known both to the encoder and decoder. An approximate motion vector field $(\widetilde{\Delta x}(x,y),\widetilde{\Delta y}(x,y))$ can be constructed using the coefficients and the basis functions. As the basis functions are known (that is stored in) both the encoder 10 and the decoder 20, only the motion

Patent Owner's Exhibit 2003, p. 148
Amazon et al v. Nokia
IPR2024-01139

coefficients need to be transmitted to the encoder, thus reducing the amount of information required to represent the motion information of the frame.

The simplest motion model is the translational motion model which requires only two coefficients to describe the motion vectors of each segment. The values of motion vectors are given by:

$$\begin{aligned} \Delta x(x,y) &= a_0 \\ \Delta y(x,y) &= b_0 \end{aligned} \tag{4}$$

This model is widely used in various international standards (ISO MPEG-1, MPEG-2, MPEG-4, ITU-T Recommendations H.261 and H.263) to describe the motion of 16x16 and 8x8 pixel blocks. Systems which use a translational motion model typically perform motion estimation at full pixel resolution or some integer fraction of full pixel resolution, for example at half or one quarter pixel resolution.

The prediction frame $P_n(x,y)$ is constructed in the Motion Compensated Prediction block 13 in the encoder 10, and is given by:

$$P_n(x,y) = R_n\left[x + \widetilde{\Delta x}(x,y), y + \widetilde{\Delta y}(x,y)\right] \tag{5}$$

In the Prediction Error Coding block 14, the prediction error frame $E_n(x,y)$ is typically compressed by representing it as a finite series (transform) of some 2-dimensional functions. For example, a 2-dimensional Discrete Cosine Transform (DCT) can be used. The transform coefficients are quantised and entropy (for example Huffman) coded before they are transmitted to the decoder (information stream 1 in Figures 1 and 2). Because of the error introduced by quantisation, this operation usually produces some degradation (loss of information) in the prediction error frame $E_n(x,y)$

Patent Owner's Exhibit 2003, p. 149
Amazon et al v. Nokia
IPR2024-01139

compensate for this degradation, the encoder 10 also comprises a Prediction Error Decoding block 15, where a decoded prediction error frame $\tilde{E}_n(x,y)$ is constructed using the transform coefficients. This locally decoded prediction error frame is added to the prediction frame $P_n(x,y)$ in the adder 19 and the resulting decoded current frame $\tilde{I}_n(x,y)$ is stored in the Frame Memory 17 for further use as the next reference frame $R_{n+1}(x,y)$.

The information stream 2 carrying information about the motion vectors is combined with information about the prediction error in multiplexer 16 and an information stream 3 containing typically at least those two types of information is sent to the decoder 20.

The operation of a corresponding video decoder 20 will now be described.

The Frame Memory 24 of the decoder 20 stores a previously reconstructed reference frame $R_n(x,y)$. The prediction frame $P_n(x,y)$ is constructed in the Motion Compensated Prediction block 21 of the decoder 20 according to equation 5, using received motion coefficient information and pixel values of the previously reconstructed reference frame $R_n(x,y)$. The transmitted transform coefficients of the prediction error frame $E_n(x,y)$ are used in the Prediction Error Decoding block 22 to construct the decoded prediction error frame $\tilde{E}_n(x,y)$. The pixels of the decoded current frame $\tilde{I}_n(x,y)$ are then reconstructed by adding the prediction frame $P_n(x,y)$ and the decoded prediction error frame $\tilde{E}_n(x,y)$:

$$\tilde{I}_n(x,y) = P_n(x,y) + \tilde{E}_n(x,y) = R_n\left[x + \tilde{\Delta}x(x,y), y + \tilde{\Delta}y(x,y)\right] + \tilde{E}_n(x,y). \qquad (6)$$

This decoded current frame may be stored in the Frame Memory 24 as the next reference frame $R_{n+1}(x,y)$.

Patent Owner's Exhibit 2003, p. 150
Amazon et al v. Nokia
IPR2024-01139

In the description of motion compensated encoding and decoding of digital video presented above, the motion vector $[\Delta x(x,y), \Delta y(x,y)]$ describing the motion of a macroblock in the current frame with respect to the reference frame $R_n(x,y)$ can point to any of the pixels in the reference frame. This means that motion between frames of a digital video sequence can only be represented at a resolution which is determined by the image pixels in the frame (so-called full pixel resolution). Real motion, however, has arbitrary precision, and thus the system described above can only provide approximate modelling of the motion between successive frames of a digital video sequence. Typically, modelling of motion between video frames with full pixel resolution is not sufficiently accurate to allow efficient minimisation of the prediction error (PE) information associated with each macroblock/frame. Therefore, to enable more accurate modelling of real motion and to help reduce the amount of PE information that must be transmitted from encoder to decoder, many video coding standards, such as H.263(+)(++) and H.26L, allow motion vectors to point 'in between' image pixels. In other words, the motion vectors can have 'sub-pixel' resolution. Allowing motion vectors to have sub-pixel resolution adds to the complexity of the encoding and decoding operations that must be performed, so it is still advantageous to limit the degree of spatial resolution a motion vector may have. Thus, video coding standards, such as those previously mentioned, typically only allow motion vectors to have full-, half- or quarter-pixel resolution.

Motion estimation with sub-pixel resolution is usually performed as a two-stage process, as illustrated in Figure 5, for a video coding scheme which allows motion vectors to have full- or half-pixel resolution. In the first step, a motion vector having full-pixel resolution is determined using any appropriate motion estimation scheme, such as the block-matching process

described in the foregoing. The resulting motion vector, having full-pixel resolution is shown in Figure 5.

In the second stage, the motion vector determined in the first stage is refined to obtain the desired half-pixel resolution. In the example illustrated in Figure 5, this is done by forming eight new search blocks of 16 x 16 pixels, the location of the top-left corner of each block being marked with an X in Figure 5. These locations are denoted as $[\Delta x + m/2, \Delta y + n/2]$, where m and n can take the values –1, 0 and +1, but cannot be zero at the same time. As only the pixel values of original image pixels are known, the values (for example luminance and/or chrominance values) of the sub-pixels residing at half-pixel locations must be estimated for each of the eight new search blocks, using some form of interpolation scheme.

Having interpolated the values of the sub-pixels at half-pixel resolution, each of the eight search blocks is compared with the macroblock whose motion vector is being sought. As in the block matching process performed in order to determine the motion vector with full pixel resolution, the macroblock is compared with each of the eight search blocks according to some criterion, for example a SAD. As a result of the comparisons, a minimum SAD value will generally be obtained. Depending on the nature of the motion in the video sequence, this minimum value may correspond to the location specified by the original motion vector (having full-pixel resolution), or it may correspond to a location having a half-pixel resolution. Thus, it is possible to determine whether a motion vector should point to a full-pixel or sub-pixel location and if sub-pixel resolution is appropriate, to determine the correct sub-pixel resolution motion vector. It should also be appreciated that the scheme just described can be extended to other sub-pixel resolutions (for example, one-quarter-pixel resolution) in an entirely analogous fashion.

In practice, the estimation of a sub-pixel value in the reference frame is performed by interpolating the value of the sub-pixel from surrounding pixel values. In general, interpolation of a sub-pixel value *F(x,y)* situated at a non-integer location $(x, y) = (n+\Delta x, m+\Delta y)$, can be formulated as a two-dimensional operation, represented mathematically as:

$$F(x,y) = \sum_{k=-K}^{K=1} \sum_{l=-L}^{L=1} f(k+K, l+L) F(n+k, m+l) \tag{7}$$

where *f(k,l)* are filter coefficients and *n* and *m* are obtained by truncating *x* and *y*, respectively, to integer values. Typically, the filter coefficients are dependent on the *x* and *y* values and the interpolation filters are usually so-called 'separable filters', in which case sub-pixel value *F(x,y)* can be calculated as follows:

$$F(x,y) = \sum_{k=-K}^{K=1} f(k+K) \sum_{l=-K}^{K=1} f(l+K) F(n+k, m+l) \tag{8}$$

The motion vectors are calculated in the encoder. Once the corresponding motion coefficients are transmitted to the decoder, it is a straightforward matter to interpolate the required sub-pixels using an interpolation method identical to that used in the encoder. In this way, a frame following a reference frame in the Frame Memory 24, can be reconstructed from the reference frame and the motion vectors.

The simplest way of applying sub-pixel value interpolation in a video coder is to interpolate each sub-pixel value every time it is needed. However, this is not an efficient solution in a video encoder, because it is likely that the same sub-pixel value will be required several times and thus calculations to interpolate the same sub-pixel value will be performed multiple times. This

results in an unnecessary increase of computational complexity / burden in the encoder.

An alternative approach, which limits the complexity of the encoder, is to pre-calculate and store all sub-pixel values in a memory associated with the encoder. This solution is called interpolation 'before-hand' interpolation hereafter in this document. While limiting complexity, before-hand interpolation has the disadvantage of increasing memory usage by a large margin. For example, if the motion vector accuracy is one quarter pixel in both horizontal and vertical dimensions, storing pre-calculated sub-pixel values for a complete image results in a memory usage that is 16 times that required to store the original, non-interpolated image. In addition, it involves the calculation of some sub-pixels which might not actually be required in calculating motion vectors in the encoder. Before-hand interpolation is also particularly inefficient in a video decoder, as the majority of pre-calculated sub-pixel values will never be required by the decoder. Thus, it is advantageous not to use pre-calculation in the decoder.

So-called 'on-demand' interpolation can be used to reduce memory requirements in the encoder. For example, if the desired pixel precision is quarter pixel resolution, only sub-pixels at one half unit resolution are interpolated before-hand for the whole frame and stored in the memory. Values of one-quarter pixel resolution sub-pixels are only calculated during the motion estimation / compensation process as and when it is required. In this case memory usage is only 4 times that required to store the original, non-interpolated image.

It should be noted that when before-hand interpolation is used, the interpolation process constitutes only a small fraction of the total encoder computational complexity / burden, since every pixel is interpolated just once. Therefore, in the encoder, the complexity of the interpolation process itself is not very critical when before-hand sub-pixel value interpolation is

Patent Owner's Exhibit 2003, p. 154
Amazon et al v. Nokia
IPR2024-01139

used. On the other hand, on-demand interpolation poses a much higher computational burden on the encoder, since sub-pixels may be interpolated many times. Hence the complexity of interpolation process, which may be considered in terms of the number of computational operations or operational cycles that must be performed in order to interpolate the sub-pixel values, becomes an important consideration.

In the decoder, the same sub-pixel values are used a few times at most and some are not needed at all. Therefore, in the decoder it is advantageous not to use before-hand interpolation at all, that is, it is advantageous not to pre-calculate any sub-pixel values.

Two interpolation schemes have been developed as part of the work ongoing in the ITU-Telecommunications Standardization Sector, Study Group 16, Video Coding Experts Group (VCEG), Questions 6 and 15. These approaches were proposed for incorporation into ITU-T recommendation H.26L and have been implemented in test models (TML) for the purposes of evaluation and further development. The test model corresponding to Question 15 is referred to as Test Model 5 (TML5), while that resulting from Question 6 is known as Test Model 6 (TML6). The interpolation schemes proposed in both TML5 and TML6 will now be described.

Throughout the description of the sub-pixel value interpolation scheme used in test model TML5, reference will be made to Figure 12a, which defines a notation for describing pixel and sub-pixel locations specific to TML5. A separate notation, defined in Figure 13a, will be used in the discussion of the sub-pixel value interpolation scheme used in TML6. A still further notation, illustrated in Figure 14a, will be used later in the text in connection with the sub-pixel value interpolation method according to the invention. It should be appreciated that the three different notations used in the text are

Patent Owner's Exhibit 2003, p. 155
Amazon et al v. Nokia
IPR2024-01139

intended to assist in the understanding of each interpolation method and to help distinguish differences between them. However, in all three figures, the letter A is used to denote original image pixels (full pixel resolution). More specifically, the letter A represents the location of pixels in the image data representing a frame of a video sequence, the pixel values of pixels A being either received as current frame $I_n(x,y)$ from a video source, or reconstructed and stored as a reference frame $R_n(x,y)$ in the Frame Memory 17, 24 of the encoder 10 or the decoder 20. All other letters represent sub-pixel locations, the values of the sub-pixels situated at the sub-pixel locations being obtained by interpolation.

Certain other terms will also be used in a consistent manner throughout the text to identify particular pixel and sub-pixel locations. These are as follows:

The term 'unit horizontal location' is used to describe the location of any sub-pixel that is constructed in a column of the original image data. Sub-pixels c and e in Figures 12a and 13a, as well as sub-pixels b and e in Figure 14a have unit horizontal locations.

The term 'unit vertical location' is used to describe any sub-pixel that is constructed in a row of the original image data. Sub-pixels b and d in Figures 12a and 13a as well as sub-pixels b and d in Figure 14a have unit vertical locations.

By definition, pixels A have unit horizontal and unit vertical locations.

The term 'half horizontal location' is used to describe the location of any sub-pixel that is constructed in a column that lies at half pixel resolution. Sub-pixels b, c, and e shown in Figures 12a and 13a fall into this category, as do sub-pixels b, c and f in Figure 14a. In a similar manner, the term 'half vertical location' is used to describe the location of any sub-pixel that is

Patent Owner's Exhibit 2003, p. 156
Amazon et al v. Nokia
IPR2024-01139

constructed in a row that lies at half-pixel resolution, such as sub-pixels c and d in Figures 12a and 13a, as well as sub-pixels b, c and g in Figure 14a.

Furthermore, the term 'quarter horizontal location' refers to any sub-pixel that is constructed in a column which lies at quarter-pixel resolution, such as sub-pixels d and e in Figure 12a, sub-pixels d and g in Figure 13a and sub-pixels d, g and h in Figure 14a. Analogously, the term 'quarter vertical location' refers to sub-pixels that are constructed in a row which lies at quarter-pixel resolution. In Figure 12a, sub-pixels e and f fall into this category, as do sub-pixels e, f and g in Figure 13a and sub-pixels e, f and h in Figure 14a.

The definition of each of the terms described above is shown by 'envelopes' drawn on the corresponding figures.

It should further be noted that it is often convenient to denote a particular pixel with a two-dimensional reference. In this case, the appropriate two-dimensional reference can be obtained by examining the intersection of the envelopes in Figures 12a, 13a and 14a. Applying this principle, pixel d in Figure 12a, for example, has a half horizontal and half vertical location and sub-pixel e has a unit horizontal and quarter vertical location. In addition, and for ease of reference, sub-pixels that reside at half unit horizontal and unit vertical locations, unit horizontal and half unit vertical locations as well as half unit horizontal and half unit vertical locations, will be referred to as ½ resolution sub-pixels. Sub-pixels which reside at any quarter unit horizontal and / or quarter unit vertical location will be referred to as ¼ resolution sub-pixels.

It should also be noted that in the descriptions of the two test models and in the detailed description of the invention itself, it will be assumed that pixels

have a minimum value of 0 and a maximum value of 2^n-1 where n is the number of bits reserved for a pixel value. The number of bits is typically 8. After a sub-pixel has been interpolated, if the value of that interpolated sub-pixel exceeds the value of 2^n-1, it is restricted to the range of $[0, 2^n-1]$, i.e. values lower than the minimum allowed value will become the minimum value (0) and values larger than the maximum will the become maximum value (2^n-1). This operation is called clipping.

The sub-pixel value interpolation scheme according to TML5 will now be described in detail with reference to Figures 12a, 12b and 12c.

1. The value for the sub-pixel at half unit horizontal and unit vertical location, that is ½ resolution sub-pixel b in Figure 12a, is calculated using a 6-tap filter. The filter interpolates a value for ½ resolution sub-pixel b based upon the values of the 6 pixels (A_1 to A_6) situated in a row at unit horizontal locations and unit vertical locations symmetrically about b, as shown in Figure 12b, according to the formula $b = (A_1 - 5A_2 + 20A_3 + 20A_4 - 5A_5 + A_6 + 16) / 32$. The operator / denotes division with truncation. The result is clipped to lie in the range $[0, 2^n-1]$.

2. Values for the ½ resolution sub-pixels labelled c are calculated using the same six tap filter as used in step 1 and the six nearest pixels or sub-pixels (A or b) in the vertical direction. Referring now to Figure 12c, the filter interpolates a value for the ½ resolution sub-pixel c located at unit horizontal and half vertical location based upon the values of the 6 pixels (A_1 to A_6) situated in a column at unit horizontal locations and unit vertical locations symmetrically about c, according to the formula $c = (A_1 - 5A_2 + 20A_3 + 20A_4 - 5A_5 + A_6 + 16) / 32$. Similarly, a value for the ½ resolution sub-pixel c at half horizontal and half vertical location is calculated according to $c = (b_1 - 5b_2 + 20b_3 + 20b_4 - 5b_5 + b_6 + 16) / 32$. Again, the operator / denotes division with truncation. The values

Patent Owner's Exhibit 2003, p. 158
Amazon et al v. Nokia
IPR2024-01139

calculated for the c sub-pixels are further clipped to lie in the range [0, 2^n-1].

At this point in the interpolation process the values of all ½ resolution sub-pixels have been calculated and the process proceeds to the calculation of ¼ resolution sub-pixel values.

3. Values for the ¼ resolution sub-pixels labelled d are calculated using linear interpolation and the values of the nearest pixels and / or ½ resolution sub-pixels in the horizontal direction. More specifically, values for ¼ resolution sub-pixels d located at quarter horizontal and unit vertical locations, are calculated by taking the average of the immediately neighbouring pixel at unit horizontal and unit vertical location (pixel A) and the immediately neighbouring ½ resolution sub-pixel at half horizontal and unit vertical location (sub-pixel b), i.e. according to d = (A + b) / 2. Values for ¼ resolution sub-pixels d located at quarter horizontal and half vertical locations, are calculated by taking the average of the immediately neighbouring ½ resolution sub-pixels c which lie at unit horizontal and half vertical location and half horizontal and half vertical locations respectively, i.e. according to d = $(c_1 + c_2)/2$. Again operator / indicates division with truncation.

4. Values for the ¼ resolution sub-pixels labelled e are calculated using linear interpolation and the values of the nearest pixels and / or ½ resolution sub-pixels in the vertical direction. In particular, ¼ resolution sub-pixels e at unit horizontal and quarter vertical locations are calculated by taking the average of the immediately neighbouring pixel at unit horizontal and unit vertical location (pixel A) and the immediately neighbouring sub-pixel at unit horizontal and half vertical location (sub-pixel c) according to e = (A + c) / 2. ¼ resolution sub-pixels e_3 at half horizontal and quarter vertical locations are calculated by taking the

Patent Owner's Exhibit 2003, p. 159
Amazon et al v. Nokia
IPR2024-01139

average of the immediately neighbouring sub-pixel at half horizontal and unit vertical location (sub-pixel b) and the immediately neighbouring sub-pixel at half horizontal and half vertical location (sub-pixel c), according to e = (b + c) / 2. Furthermore, ¼ resolution sub-pixels e at quarter horizontal and quarter vertical locations are calculated by taking the average of the immediately neighbouring sub-pixels at quarter horizontal and unit vertical location and the corresponding sub-pixel at quarter horizontal and half vertical location (sub-pixels d), according to $e = (d_1 + d_2) / 2$. Once more, operator / indicates division with truncation.

5. The value for ¼ resolution sub-pixel f is interpolated by averaging the values of the 4 closest pixels values at unit horizontal and vertical locations, according to $f = (A_1 + A_2 + A_3 + A_4 + 2) / 4$, where pixels A_1, A_2, A_3 and A_4 are the four nearest original pixels.

A disadvantage of TML5 is that the decoder is computationally complex. This results from the fact that TML5 uses an approach in which interpolation of ¼ resolution sub-pixel values depends upon the interpolation of ½ resolution sub-pixel values. This means that in order to interpolate the values of the ¼ resolution sub-pixels, the values of the ½ resolution sub-pixels from which they are determined must be calculated first. Furthermore, since the values of some of the ¼ resolution sub-pixels depend upon the interpolated values obtained for other ¼ resolution sub-pixels, truncation of the ¼ resolution sub-pixel values has a deleterious effect on the precision of some of the ¼ resolution sub-pixel values. Specifically, the ¼ resolution sub-pixel values are less precise than they would be if calculated from values that had not been truncated and clipped. Another disadvantage of TML5 is that it is necessary to store the values of the ½ resolution sub-pixels in order to interpolate the ¼ resolution sub-pixel values. Therefore, excess memory is required to store a result which is not ultimately required.

The sub-pixel value interpolation scheme according to TML6, referred to herein as direct interpolation, will now be described. In the encoder the interpolation method according to TML6 works like the previously described TML5 interpolation method, except that maximum precision is retained throughout. This is achieved by using intermediate values which are neither rounded nor clipped. A step-by-step description of interpolation method according to TML6 as applied in the encoder is given below with reference to Figures 13a, 13b and 13c.

1. The value for the sub-pixel at half unit horizontal and unit vertical location, that is ½ resolution sub-pixel b in Figure 13a, is obtained by first calculating an intermediate value *b* using a six tap filter. The filter calculates *b* based upon the values of the 6 pixels (A_1 to A_6) situated in a row at unit horizontal locations and unit vertical locations symmetrically about b, as shown in Figure 13b, according to the formula $b = (A_1 - 5A_2 + 20A_3 + 20A_4 - 5A_5 + A_6)$. The final value of b is then calculated as $b = (b + 16) / 32$ and is clipped to lie in the range $[0, 2^n-1]$. As before, the operator / denotes division with truncation.

2. Values for the ½ resolution sub-pixels labelled c are obtained by first calculating intermediate values *c*. Referring to Figure 13c, an intermediate value *c* for the ½ resolution sub-pixel c located at unit horizontal and half vertical location is calculated based upon the values of the 6 pixels (A_1 to A_6) situated in a column at unit horizontal locations and unit vertical locations symmetrically about c, according to the formula $c = (A_1 - 5A_2 + 20A_3 + 20A_4 - 5A_5 + A_6)$. The final value for the ½ resolution sub-pixel c located at unit horizontal and half vertical location is then calculated according to $c = (c + 16) / 32$. Similarly, an intermediate value *c* for the ½ resolution sub-pixel c at half horizontal and half vertical location is calculated according to $c = (b_1 - 5b_2 + 20b_3 + 20b_4 - 5b_5 + b_6)$. A final value for this ½ resolution sub-pixel is then

Patent Owner's Exhibit 2003, p. 161
Amazon et al v. Nokia
IPR2024-01139

calculated according to (c + 512) / 1024. Again, the operator / denotes division with truncation and the values calculated for ½ resolution sub-pixels c are further clipped to lie in the range [0, 2^n-1].

3. Values for the ¼ resolution sub-pixels labelled d are calculated as follows. Values for ¼ resolution sub-pixels d located at quarter horizontal and unit vertical locations, are calculated from the value of the immediately neighbouring pixel at unit horizontal and unit vertical location (pixel A) and the intermediate value b calculated in step (1) for the immediately neighbouring ½ resolution sub-pixel at half horizontal and unit vertical location (½ resolution sub-pixel b), according to d = (32A + b + 32) / 64. Values for ¼ resolution sub-pixels d located at quarter horizontal and half vertical locations, are interpolated using the intermediate values c calculated for the immediately neighbouring ½ resolution sub-pixels c which lie at unit horizontal and half vertical location and half horizontal and half vertical locations respectively, according to d = ($32c_1 + c_2 + 1024$) / 2048. Again operator / indicates division with truncation and the finally obtained ¼ resolution sub-pixel values d are clipped to lie in the range [0, 2^n-1].

4. Values for the ¼ resolution sub-pixels labelled e are calculated as follows. Values for ¼ resolution sub-pixels e located at unit horizontal and quarter vertical locations are calculated from the value of the immediately neighbouring pixel at unit horizontal and unit vertical location (pixel A) and the intermediate value c calculated in step (2) for the immediately neighbouring ½ resolution sub-pixel at unit horizontal and half vertical location, according to e = (32A + c + 32) / 64. Values for ¼ resolution sub-pixels e located at half horizontal and

Patent Owner's Exhibit 2003, p. 162
Amazon et al v. Nokia
IPR2024-01139

quarter vertical locations are calculated from the intermediate value *b* calculated in step (1) for the immediately neighbouring ½ resolution sub-pixel at half horizontal and unit vertical location and the intermediate value *c* calculated in step (2) for the immediately neighbouring ½ resolution sub-pixel at half horizontal and half vertical location, according to $e = (32b + c + 1024) / 2048$. Once more, operator / indicates division with truncation and the finally obtained ¼ resolution sub-pixel values e are clipped to lie in the range $[0, 2^n-1]$.

5. Values for ¼ resolution sub-pixels labelled g are computed using the value of the nearest original pixel A and the intermediate values of the three nearest neighbouring ½ resolution sub-pixels, according to $g = (1024A + 32b + 32c_1 + c_2 + 2048) / 4096$. As before, operator / indicates division with truncation and the finally obtained for ¼ resolution sub-pixel values g are clipped to lie in the range $[0, 2^n-1]$.

6. The value for ¼ resolution sub-pixel f is interpolated by averaging the values of the 4 closest pixels at unit horizontal and vertical locations, according to $f = (A_1 + A_2 + A_3 + A_4 + 2) / 4$, where the locations of pixels A_1, A_2, A_3 and A_4 are the four nearest original pixels.

In the decoder, sub-pixel values can be obtained directly by applying 6-tap filters in horizontal and vertical directions. In the case of ¼ sub-pixel resolution, referring to Figure 13a, the filter coefficients applied to pixels and sub-pixels at unit vertical location are [0, 0, 64, 0, 0, 0] for a set of six pixels A, [1, -5, 52, 20, -5, 1] for a set of six sub-pixels d, [2, -10, 40, 40, -10, 2] for a set of six sub-pixels b, and [1, -5, 20, 52, -5, 1] for a set of six sub-pixels d. These filter coefficients are applied to respective sets of pixels or sub-pixels in the same row as the sub-pixel values being interpolated.

Patent Owner's Exhibit 2003, p. 163
Amazon et al v. Nokia
IPR2024-01139

After applying the filters in the horizontal and vertical directions, interpolated value *c* is normalized according to c = (*c* + 2048) / 4096 and clipped to lie in the range [0, 2^n-*1*]. When a motion vector points to an integer pixel position in either the horizontal or vertical direction, many zero coefficients are used. In a practical implementation of TML6, different branches are used in the software which are optimised for the different sub-pixel cases so that there are no multiplications by zero coefficients.

It should be noted that in TML6, ¼ resolution sub-pixel values are obtained directly using the intermediate values referred to above and are not derived from rounded and clipped values for ½ resolution sub-pixels. Therefore, in obtaining the ¼ resolution sub-pixel values, it is not necessary to calculate final values for any of the ½ resolution sub-pixels. Specifically, it is not necessary to carry out the truncation and clipping operations associated with the calculation of final values for the ½ resolution sub-pixels. Neither is it necessary to have stored final values for ½ resolution sub-pixels for use in the calculation of the ¼ resolution sub-pixel values. Therefore TML6 is computationally less complex than TML5, as fewer truncating and clipping operations are required. However, a disadvantage of TML6 is that high precision arithmetic is required both in the encoder and in the decoder. High precision interpolation requires more silicon area in ASICs and requires more computations in some CPUs. Furthermore, implementation of direct interpolation as specified in TML6 in an on-demand fashion has a high memory requirement. This is an important factor, particularly in embedded devices.

In view of the previously presented discussion, it should be appreciated that due to the different requirements of the video encoder and decoder with regard to sub-pixel interpolation, there exists a significant problem in developing a method of sub-pixel value interpolation capable of providing satisfactory performance in both the encoder and decoder. Furthermore,

neither of the current test models (TML5, TML6) described in the foregoing can provide a solution that is optimum for application in both encoder and decoder.

Summary of the Invention

According to a first aspect of the invention there is provided method of interpolation in video coding in which an image comprising pixels arranged in rows and columns and represented by values having a specified dynamic range, the pixels in the rows residing at unit horizontal locations and the pixels in the columns residing at unit vertical locations, is interpolated to generate values for sub-pixels at fractional horizontal and vertical locations, the fractional horizontal and vertical locations being defined according to $1/2^x$, where x is a positive integer having a maximum value N, the method comprising:

a) when values for sub-pixels at $1/2^{N-1}$ unit horizontal and unit vertical locations, and unit horizontal and $1/2^{N-1}$ unit vertical locations are required, interpolating such values directly using weighted sums of pixels residing at unit horizontal and unit vertical locations;

b) when values for sub-pixels at $1/2^{N-1}$ unit horizontal and $1/2^{N-1}$ unit vertical locations are required, interpolating such values directly using a choice of a first weighted sum of values for sub-pixels residing at $1/2^{N-1}$ unit horizontal and unit vertical locations and a second weighted sum of values for sub-pixels residing at unit horizontal and $1/2^{N-1}$ unit vertical locations, the first and second weighted sums of values being calculated according to step (a); and

c) when a value for a sub-pixel situated at a $1/2^N$ unit horizontal and $1/2^N$ unit vertical location is required, interpolating such a value by taking a weighted average of the value of a first sub-pixel or pixel situated at a $1/2^{N-m}$ unit horizontal and $1/2^{N-n}$ unit vertical location and the value of a second sub-pixel or pixel located at a $1/2^{N-p}$ unit horizontal and $1/2^{N-q}$ unit vertical location, variables m, n, p and q taking integer values in the range 1 to N.

Patent Owner's Exhibit 2003, p. 165
Amazon et al v. Nokia
IPR2024-01139

such that the first and second sub-pixels or pixels are located diagonally with respect to the sub-pixel at $1/2^N$ unit horizontal and $1/2^N$ vertical location.

Preferably a first and a second weight are used in the weighted average referred to in (c), the relative magnitudes of the weights being inversely proportional to the (straight-line diagonal) proximity of the first and the second sub-pixel or pixel to the sub-pixel at $1/2^N$ unit horizontal and $1/2^N$ vertical location.

In a situation where the first and the second sub-pixel or pixel are symmetrically located with respect to (equidistant from) the sub-pixel at $1/2^N$ unit horizontal and $1/2^N$ vertical location, the first and second weights may have equal values.

The first weighted sum of values for sub-pixels residing at $1/2^{N-1}$ unit horizontal and unit vertical locations in step b) may be used when a sub-pixel at $1/2^{N-1}$ unit horizontal and $1/2^N$ unit vertical location is required.

The second weighted sum of values for sub-pixels residing at unit horizontal and $1/2^{N-1}$ unit vertical locations in step b) may be used when a sub-pixel at $1/2^N$ unit horizontal and $1/2^{N-1}$ unit vertical location is required.

In one embodiment, when values for sub-pixels at $1/2^N$ unit horizontal and unit vertical locations, and $1/2^N$ horizontal and $1/2^{N-1}$ vertical locations are required, such values are interpolated by taking the average of the values of a first pixel or sub-pixel located at a vertical location corresponding to that of the sub-pixel being calculated and unit horizontal location and a second pixel or sub-pixel located at a vertical location corresponding to that of the sub-pixel being calculated and $1/2^{N-1}$ unit horizontal location.

When values for sub-pixels at unit horizontal and $1/2^N$ unit vertical locations, and $1/2^{N-1}$ unit horizontal and $1/2^N$ unit vertical locations are required, they may be interpolated by taking the average of the values of a first pixel or sub-pixel located at a horizontal location corresponding to that of the sub-pixel being calculated and unit vertical location and a second pixel or sub-pixel located at a horizontal location corresponding to that of the sub-pixel being calculated and $1/2^{N-1}$ unit vertical location.

Values for sub-pixels at $1/2^N$ unit horizontal and $1/2^N$ unit vertical locations may be interpolated by taking the average of values of a pixel located at a unit horizontal and unit vertical location, and a sub-pixel located at a $1/2^{N-1}$ unit horizontal and $1/2^{N-1}$ unit vertical location.

Values for sub-pixels at $1/2^N$ unit horizontal and $1/2^N$ unit vertical locations may be interpolated by taking the average of values of a sub-pixel located at a $1/2^{N-1}$ unit horizontal and unit vertical location, and a sub-pixel located at a unit horizontal and $1/2^{N-1}$ unit vertical location.

Values for half of the sub-pixels at $1/2^N$ unit horizontal and $1/2^N$ unit vertical locations may be interpolated by taking the average of a first pair of values of a sub-pixel located at a $1/2^{N-1}$ unit horizontal and unit vertical location, and a sub-pixel located at a unit horizontal and $1/2^{N-1}$ unit vertical location and values for the other half of the sub-pixels at $1/2^N$ unit horizontal and $1/2^N$ unit vertical locations are interpolated by taking the average of a second pair of values of a pixel located at a unit horizontal and unit vertical location, and a sub-pixel located at a $1/2^{N-1}$ unit horizontal and $1/2^{N-1}$ unit vertical location.

Values for sub-pixels at $1/2^N$ unit horizontal and $1/2^N$ unit vertical locations are alternately interpolated for one such sub-pixel by taking the average of a first pair of values of a sub-pixel located at a $1/2^{N-1}$ unit horizontal and unit vertical location, and a sub-pixel located at a unit horizontal and $1/2^{N-1}$ unit

vertical location and values and for a neighbouring such sub-pixel by taking the average of a second pair of values of a pixel located at a unit horizontal and unit vertical location, and a sub-pixel located at a $1/2^{N-1}$ unit horizontal and $1/2^{N-1}$ unit vertical location.

The sub-pixels at $1/2^N$ unit horizontal and $1/2^N$ unit vertical locations may be alternately interpolated in a horizontal direction.

The sub-pixels at $1/2^N$ unit horizontal and $1/2^N$ unit vertical locations may be alternately interpolated in a horizontal direction.

When values for some sub-pixels at $1/2^N$ unit horizontal and $1/2^N$ unit vertical locations are required, such values may be interpolated by taking the average of a plurality of nearest neighbouring pixels.

At least one of step a) and step b) interpolating sub-pixel values directly using weighted sums may involve the calculation of an intermediate value for the sub-pixel values having a dynamic range greater than the specified dynamic range.

The intermediate value for a sub-pixel having $1/2^{N-1}$ sub-pixel resolution may be used the calculation of a sub-pixel value having $1/2^N$ sub-pixel resolution.

According to a second aspect of the invention, there is provided a method of interpolation in video coding in which an image comprising pixels arranged in rows and columns and represented by values having a specified dynamic range, the pixels in the rows residing at unit horizontal locations and the pixels in the columns residing at unit vertical locations, is interpolated to generate values for sub-pixels at fractional horizontal and vertical locations, the method comprising:

a) when values for sub-pixels at half unit horizontal and unit vertical locations, and unit horizontal and half unit vertical locations are required, interpolating such values directly using weighted sums of pixels residing at unit horizontal and unit vertical locations;

b) when values for sub-pixels at half unit horizontal and half unit vertical locations are required, interpolating such values directly using a weighted sum of values for sub-pixels residing at half unit horizontal and unit vertical locations calculated according to step (a); and

c) when values for sub-pixels at quarter unit horizontal and quarter unit vertical locations are required, interpolating such values by taking the average of at least one pair of a first pair of values of a sub-pixel located at a half unit horizontal and unit vertical location, and a sub-pixel located at a unit horizontal and half unit vertical location and a second pair of values of a pixel located at a unit horizontal and unit vertical location, and a sub-pixel located at a half unit horizontal and half unit vertical location.

According to a third aspect of the invention, there is provided a method of interpolation in video coding in which an image comprising pixels arranged in rows and columns and represented by values having a specified dynamic range, the pixels in the rows residing at unit horizontal locations and the pixels in the columns residing at unit vertical locations, is interpolated to generate values for sub-pixels at fractional horizontal and vertical locations, the fractional horizontal and vertical locations being defined according to $1/2^x$ where x is a positive integer having a maximum value N, the method comprising:

a) when values for sub-pixels at $1/2^{N-1}$ unit horizontal and unit vertical locations, and unit horizontal and $1/2^{N-1}$ unit vertical locations are required, interpolating such values directly using weighted sums of pixels residing at unit horizontal and unit vertical locations;

b) when a value for a sub-pixel at a sub-pixel horizontal and sub-pixel vertical location is required, interpolating such a value directly using a

Patent Owner's Exhibit 2003, p. 169
Amazon et al v. Nokia
IPR2024-01139

choice of a first weighted sum of values for sub-pixels located at a vertical location corresponding to that of the sub-pixel being calculated and a second weighted sum of values for sub-pixels located at a horizontal location corresponding to that of the sub-pixel being calculated.

The sub-pixels used in the first weighted sum may be sub-pixels residing at $1/2^{N-1}$ unit horizontal and unit vertical locations and the first weighted sum may be used to interpolate a value for a sub-pixel at $1/2^{N-1}$ unit horizontal and $1/2^{N}$ unit vertical location.

The sub-pixels used in the second weighted sum may be sub-pixels residing at unit horizontal and $1/2^{N-1}$ unit vertical locations and the second weighted sum may be used to interpolate a value for a sub-pixel at $1/2^{N}$ unit horizontal and $1/2^{N-1}$ unit vertical location.

When values for sub-pixels at $1/2^{N}$ unit horizontal and $1/2^{N}$ unit vertical locations are required, they may be interpolated by taking the average of at least one pair of a first pair of values of a sub-pixel located at a $1/2^{N-1}$ unit horizontal and unit vertical location, and a sub-pixel located at a unit horizontal and $1/2^{N-1}$ unit vertical location and a second pair of values of a pixel located at a unit horizontal and unit vertical location, and a sub-pixel located at a $1/2^{N-1}$ unit horizontal and $1/2^{N-1}$ unit vertical location.

In the foregoing, N may be equal an integer selected from a list consisting of the values 2, 3, and 4.

Sub-pixels at quarter unit horizontal location are to be interpreted as being sub-pixels having as their left-hand nearest neighbour a pixel at unit horizontal location and as their right-hand nearest neighbour a sub-pixel at half unit horizontal location as well as sub-pixels having as their left-hand nearest neighbour a sub-pixel at half unit horizontal location and as their

right-hand nearest neighbour a pixel at unit horizontal location. Correspondingly, sub-pixels at quarter unit vertical location are to be interpreted as being sub-pixels having as their upper nearest neighbour a pixel at unit vertical location and as their lower nearest neighbour a sub-pixel at half unit vertical location as well as sub-pixels having as their upper nearest neighbour a sub-pixel at half unit vertical location and as their lower nearest neighbour a pixel at unit vertical location.

The term dynamic range, refers to the range of values which the sub-pixel values and the weighted sums can take.

Preferably changing the dynamic range, whether by extending it or reducing it, means changing the number of bits which are used to represent the dynamic range.

In an embodiment of the invention, the method is applied to an image that is sub-divided into a number of image blocks. Preferably each image block comprises four corners, each corner being defined by a pixel located at a unit horizontal and unit vertical location. Preferably the method is applied to each image block as the block becomes available for sub-pixel value interpolation. Alternatively, sub-pixel value interpolation according to the method of the invention is performed once all image blocks of an image have become available for sub-pixel value interpolation.

Preferably the method is used in video encoding. Preferably the method is used in video decoding.

In one embodiment of the invention, when used in encoding, the method is carried out as before-hand interpolation, in which values for all sub-pixels at half unit locations and values for all sub-pixels at quarter unit locations are calculated and stored before being subsequently used in the determination

of a prediction frame during motion predictive coding. In alternative embodiments, the method is carried out as a combination of before-hand and on-demand interpolation. In this case, a certain proportion or category of sub-pixel values is calculated and stored before being used in the determination of a prediction frame and certain other sub-pixel values are calculated only when required during motion predictive coding.

Preferably, when the method is used in decoding, sub-pixels are only interpolated when their need is indicated by a motion vector.

According to a fourth aspect of the invention, there is provided a video coder for coding an image comprising pixels arranged in rows and columns and represented by values having a specified dynamic range, the pixels in the rows residing at unit horizontal locations and the pixels in the columns residing at unit vertical locations, the video coder comprising an interpolator adapted to generate values for sub-pixels at fractional horizontal and vertical locations, the fractional horizontal and vertical locations being defined according to $1/2^x$, where x is a positive integer having a maximum value N, the interpolator being adapted to:

a) interpolate values for sub-pixels at $1/2^{N-1}$ unit horizontal and unit vertical locations, and unit horizontal and $1/2^{N-1}$ unit vertical locations directly using weighted sums of pixels residing at unit horizontal and unit vertical locations;

b) interpolate values for sub-pixels at $1/2^{N-1}$ unit horizontal and $1/2^{N-1}$ unit vertical locations directly using a choice of a first weighted sum of values for sub-pixels residing at $1/2^{N-1}$ unit horizontal and unit vertical locations and a second weighted sum of values for sub-pixels residing at unit horizontal and $1/2^{N-1}$ unit vertical locations, the first and second weighted sums of values being calculated according to step (a); and

c) interpolate a value for a sub-pixel situated at a $1/2^N$ unit horizontal and $1/2^N$ unit vertical location by taking a weighted average of the value of a first sub-pixel or pixel situated at a $1/2^{N-m}$ unit horizontal and $1/2^{N-n}$ unit vertical

Patent Owner's Exhibit 2003, p. 172
Amazon et al v. Nokia
IPR2024-01139

location and the value of a second sub-pixel or pixel located at a $1/2^{N-p}$ unit horizontal and $1/2^{N-q}$ unit vertical location, variables m, n, p and q taking integer values in the range 1 to N such that the first and second sub-pixels or pixels are located diagonally with respect to the sub-pixel at $1/2^N$ unit horizontal and $1/2^N$ vertical location.

The video coder may comprise a video encoder. It may comprise a video decoder. There may be a codec comprising both the video encoder and the video decoder.

According to a fifth aspect of the invention, there is provided a communications terminal comprising a video coder for coding an image comprising pixels arranged in rows and columns and represented by values having a specified dynamic range, the pixels in the rows residing at unit horizontal locations and the pixels in the columns residing at unit vertical locations, the video coder comprising an interpolator adapted to generate values for sub-pixels at fractional horizontal and vertical locations, the fractional horizontal and vertical locations being defined according to $1/2^x$, where x is a positive integer having a maximum value N, the interpolator being adapted to:

a) interpolate values for sub-pixels at $1/2^{N-1}$ unit horizontal and unit vertical locations, and unit horizontal and $1/2^{N-1}$ unit vertical locations directly using weighted sums of pixels residing at unit horizontal and unit vertical locations;

b) interpolate values for sub-pixels at $1/2^{N-1}$ unit horizontal and $1/2^{N-1}$ unit vertical locations directly using a choice of a first weighted sum of values for sub-pixels residing at $1/2^{N-1}$ unit horizontal and unit vertical locations and a second weighted sum of values for sub-pixels residing at unit horizontal and $1/2^{N-1}$ unit vertical locations, the first and second weighted sums of values being calculated according to step (a); and

c) interpolate a value for a sub-pixel situated at a $1/2^N$ unit horizontal and $1/2^N$ unit vertical location by taking a weighted average of the values of a first

sub-pixel or pixel situated at a $1/2^{N-m}$ unit horizontal and $1/2^{N-n}$ unit vertical location and the value of a second sub-pixel or pixel located at a $1/2^{N-p}$ unit horizontal and $1/2^{N-q}$ unit vertical location, variables m, n, p and q taking integer values in the range 1 to N such that the first and second sub-pixels or pixels are located diagonally with respect to the sub-pixel at $1/2^N$ unit horizontal and $1/2^N$ vertical location.

The communications terminal may comprise a video encoder. It may comprise a video decoder. Preferably, it comprises a video codec comprising a video encoder and a video decoder.

Preferably the communications terminal comprising a user interface, a processor and at least one of a transmitting block and a receiving block, and a video coder according to at least one of the third and fourth aspects of the invention. Preferably the processor controls the operation of the transmitting block and/or the receiving block and the video coder.

According to a sixth aspect of the invention, there is provided a telecommunications system comprising a communications terminal and a network, the telecommunications network and the communications terminal being connected by a communications link over which coded video can be transmitted, the communications terminal comprising a video coder for coding for coding an image comprising pixels arranged in rows and columns and represented by values having a specified dynamic range, the pixels in the rows residing at unit horizontal locations and the pixels in the columns residing at unit vertical locations, the video coder comprising an interpolator adapted to generate values for sub-pixels at fractional horizontal and vertical locations, the fractional horizontal and vertical locations being defined according to $1/2^x$, where x is a positive integer having a maximum value N, the interpolator being adapted to:

a) interpolate values for sub-pixels at $1/2^{N-1}$ unit horizontal and unit vertical locations, and unit horizontal and $1/2^{N-1}$ unit vertical locations directly using

weighted sums of pixels residing at unit horizontal and unit vertical locations;

b) interpolate values for sub-pixels at $1/2^{N-1}$ unit horizontal and $1/2^{N-1}$ unit vertical locations directly using a choice of a first weighted sum of values for sub-pixels residing at $1/2^{N-1}$ unit horizontal and unit vertical locations and a second weighted sum of values for sub-pixels residing at unit horizontal and $1/2^{N-1}$ unit vertical locations, the first and second weighted sums of values being calculated according to step (a); and

c) interpolate a value for a sub-pixel situated at a $1/2^N$ unit horizontal and $1/2^N$ unit vertical location by taking a weighted average of the value of a first sub-pixel or pixel situated at a $1/2^{N-m}$ unit horizontal and $1/2^{N-n}$ unit vertical location and the value of a second sub-pixel or pixel located at a $1/2^{N-p}$ unit horizontal and $1/2^{N-q}$ unit vertical location, variables m, n, p and q taking integer values in the range 1 to N such that the first and second sub-pixels or pixels are located diagonally with respect to the sub-pixel at $1/2^N$ unit horizontal and $1/2^N$ vertical location.

Preferably the telecommunications system is a mobile telecommunications system comprising a mobile communications terminal and a wireless network, the connection between the mobile communications terminal and the wireless network being formed by a radio link. Preferably the network enables the communications terminal to communicate with other communications terminals connected to the network over communications links between the other communications terminals and the network.

According to a seventh aspect of the invention, there is provided a telecommunications system comprising a communications terminal and a network, the telecommunications network and the communications terminal being connected by a communications link over which coded video can be transmitted, the network comprising a video coder for coding for coding an image comprising pixels arranged in rows and columns and represented by values having a specified dynamic range, the pixels in the rows residing at

unit horizontal locations and the pixels in the columns residing at unit vertical locations, the video coder comprising an interpolator adapted to generate values for sub-pixels at fractional horizontal and vertical locations, the fractional horizontal and vertical locations being defined according to $1/2^x$, where x is a positive integer having a maximum value N, the interpolator being adapted to:

a) interpolate values for sub-pixels at $1/2^{N-1}$ unit horizontal and unit vertical locations, and unit horizontal and $1/2^{N-1}$ unit vertical locations directly using weighted sums of pixels residing at unit horizontal and unit vertical locations;

b) interpolate values for sub-pixels at $1/2^{N-1}$ unit horizontal and $1/2^{N-1}$ unit vertical locations directly using a choice of a first weighted sum of values for sub-pixels residing at $1/2^{N-1}$ unit horizontal and unit vertical locations and a second weighted sum of values for sub-pixels residing at unit horizontal and $1/2^{N-1}$ unit vertical locations, the first and second weighted sums of values being calculated according to step (a); and

c) interpolate a value for a sub-pixel situated at a $1/2^N$ unit horizontal and $1/2^N$ unit vertical location by taking a weighted average of the value of a first sub-pixel or pixel situated at a $1/2^{N-m}$ unit horizontal and $1/2^{N-n}$ unit vertical location and the value of a second sub-pixel or pixel located at a $1/2^{N-p}$ unit horizontal and $1/2^{N-q}$ unit vertical location, variables m, n, p and q taking integer values in the range 1 to N such that the first and second sub-pixels or pixels are located diagonally with respect to the sub-pixel at $1/2^N$ unit horizontal and $1/2^N$ vertical location.

According to an eighth aspect of the invention there is provided a video coder for coding an image comprising pixels arranged in rows and columns and represented by values having a specified dynamic range, the pixels in the rows residing at unit horizontal locations and the pixels in the columns residing at unit vertical locations, the coder comprising an interpolator adapted to generate values for sub-pixels at fractional horizontal and

vertical locations, the resolution of the sub-pixels being determined by a positive integer N, the interpolator being adapted to:

a) interpolate values for sub-pixels at $1/2^{N-1}$ unit horizontal and unit vertical locations, and unit horizontal and $1/2^{N-1}$ unit vertical locations directly using weighted sums of pixels residing at unit horizontal and unit vertical locations;

b) interpolate a value for a sub-pixel at a sub-pixel horizontal and sub-pixel vertical location is required directly using a choice of a first weighted sum of values for sub-pixels located at a vertical location corresponding to that of the sub-pixel being calculated and a second weighted sum of values for sub-pixels located at a horizontal location corresponding to that of the sub-pixel being calculated.

The interpolator may be further adapted to form the first weighted sum using the values of sub-pixels residing at $1/2^{N-1}$ unit horizontal and unit vertical locations and to use the first weighted sum to interpolate a value for a sub-pixel at $1/2^{N-1}$ unit horizontal and $1/2^{N}$ unit vertical location.

The interpolator may be further adapted to form the second weighted sum using the values of sub-pixels residing at unit horizontal and $1/2^{N-1}$ unit vertical locations and to use the second weighted sum to interpolate a value for a sub-pixel at $1/2^{N}$ unit horizontal and $1/2^{N-1}$ unit vertical location.

The interpolator may be further adapted to interpolate values for sub-pixels at $1/2^{N}$ unit horizontal and $1/2^{N}$ unit vertical locations by taking the average of at least one pair of a first pair of values of a sub-pixel located at a $1/2^{N-1}$ unit horizontal and unit vertical location, and a sub-pixel located at a unit horizontal and $1/2^{N-1}$ unit vertical location and a second pair of values of a pixel located at a unit horizontal and unit vertical location, and a sub-pixel located at a $1/2^{N-1}$ unit horizontal and $1/2^{N-1}$ unit vertical location.

According to a ninth aspect of the invention there is provided a communications terminal comprising a video coder for coding an image comprising pixels arranged in rows and columns and represented by values having a specified dynamic range, the pixels in the rows residing at unit horizontal locations and the pixels in the columns residing at unit vertical locations, the coder comprising an interpolator adapted to generate values for sub-pixels at fractional horizontal and vertical locations, the resolution of the sub-pixels being determined by a positive integer N, the interpolator being adapted to:

a) interpolate values for sub-pixels at $1/2^{N-1}$ unit horizontal and unit vertical locations, and unit horizontal and $1/2^{N-1}$ unit vertical locations directly using weighted sums of pixels residing at unit horizontal and unit vertical locations;

b) interpolate a value for a sub-pixel at a sub-pixel horizontal and sub-pixel vertical location is required directly using a choice of a first weighted sum of values for sub-pixels located at a vertical location corresponding to that of the sub-pixel being calculated and a second weighted sum of values for sub-pixels located at a horizontal location corresponding to that of the sub-pixel being calculated.

According to a tenth aspect of the invention there is provided a telecommunications system comprising a communications terminal and a network, the telecommunications network and the communications terminal being connected by a communications link over which coded video can be transmitted, the communications terminal comprising a video coder for coding an image comprising pixels arranged in rows and columns and represented by values having a specified dynamic range, the pixels in the rows residing at unit horizontal locations and the pixels in the columns residing at unit vertical locations, the coder comprising an interpolator adapted to generate values for sub-pixels at fractional horizontal and vertical locations, the resolution of the sub-pixels being determined by a positive integer N, the interpolator being adapted to:

Patent Owner's Exhibit 2003, p. 178
Amazon et al v. Nokia
IPR2024-01139

a) interpolate values for sub-pixels at $1/2^{N-1}$ unit horizontal and unit vertical locations, and unit horizontal and $1/2^{N-1}$ unit vertical locations directly using weighted sums of pixels residing at unit horizontal and unit vertical locations;

b) interpolate a value for a sub-pixel at a sub-pixel horizontal and sub-pixel vertical location is required directly using a choice of a first weighted sum of values for sub-pixels located at a vertical location corresponding to that of the sub-pixel being calculated and a second weighted sum of values for sub-pixels located at a horizontal location corresponding to that of the sub-pixel being calculated.

According to an eleventh aspect of the invention there is provided a telecommunications system comprising a communications terminal and a network, the telecommunications network and the communications terminal being connected by a communications link over which coded video can be transmitted, the network comprising a video coder for coding for coding an image comprising pixels arranged in rows and columns and represented by values having a specified dynamic range, the pixels in the rows residing at unit horizontal locations and the pixels in the columns residing at unit vertical locations, the coder comprising an interpolator adapted to generate values for sub-pixels at fractional horizontal and vertical locations, the resolution of the sub-pixels being determined by a positive integer N, the interpolator being adapted to:

a) interpolate values for sub-pixels at $1/2^{N-1}$ unit horizontal and unit vertical locations, and unit horizontal and $1/2^{N-1}$ unit vertical locations directly using weighted sums of pixels residing at unit horizontal and unit vertical locations;

b) interpolate a value for a sub-pixel at a sub-pixel horizontal and sub-pixel vertical location is required directly using a choice of a first weighted sum of values for sub-pixels located at a vertical location corresponding to that of the sub-pixel being calculated and a second weighted sum of values for

sub-pixels located at a horizontal location corresponding to that of the sub-pixel being calculated.

Brief Description of the Figures

An embodiment of the invention will now be described by way of example only with reference to the accompanying drawings in which:

Figure 1 shows a video encoder according to the prior art;

Figure 2 shows a video decoder according to the prior art;

Figure 3 shows the types of frames used in video encoding;

Figures 4a, 4b, and 4c show steps in block-matching;

Figure 5 illustrates the process of motion estimation to sub-pixel resolution;

Figure 6 shows a terminal device comprising video encoding and decoding equipment in which the method of the invention may be implemented;

Figure 7 shows a video encoder according an embodiment of the present invention;

Figure 8 shows a video decoder according to an embodiment of the present invention;

Figures 9 and 10 have not been used and any such figures should be disregarded;

Figure 11 shows a schematic diagram of a mobile telecommunications network according to an embodiment of the present invention;

Figure 12a shows a notation for describing pixel and sub-pixel locations specific to TML5;

Figure 12b shows interpolation of a half resolution sub-pixels;

Figure 12c shows interpolation of a half resolution sub-pixels;

Figure 13a shows a notation for describing pixel and sub-pixel locations specific to TML6;

Figure 13b shows interpolation of a half resolution sub-pixels;

Figure 13c shows interpolation of a half resolution sub-pixels;

Figure 14 shows a notation for describing pixel and sub-pixel locations specific to the invention;

Figure 14b shows interpolation of a half resolution sub-pixels according to the invention;

Figure 14c shows interpolation of a half resolution sub-pixels according to the invention;

Figure 15 shows possible choices of diagonal interpolation for sub-pixels;

Figure 16 shows the half resolution sub-pixel values required to calculate other half resolution sub-pixel values;

Figure 17a shows the half resolution sub-pixel values that must be calculated in order to interpolate values for quarter resolution sub-pixels in an image block using the interpolation method of TML5;

Figure 17b shows the half resolution sub-pixel values that must be calculated in order to interpolate values for quarter resolution sub-pixels in an image block using the interpolation method according to the invention;

Figures 18a shows the numbers of half resolution sub-pixels that must be calculated in order to obtain values for quarter resolution sub-pixels within an image block using the sub-pixel value interpolation method according to TML5;

Figure 18b shows the numbers of half resolution sub-pixels that must be calculated in order to obtain values for quarter resolution sub-pixels within an image block using the sub-pixel value interpolation method according to the invention;

Figure 19 shows a numbering scheme for each of the 15 sub-pixel positions;

Figure 20 shows nomenclature used to describe pixels, half resolution sub-pixels, quarter resolution sub-pixels and eighth resolution sub-pixels

Figure 21a shows the diagonal direction to be used in the interpolation of each eighth resolution sub-pixel in an embodiment of the invention;

Figure 21b shows the diagonal direction to be used in the interpolation of each eighth resolution sub-pixel in another embodiment of the invention; and

Figure 22 shows nomenclature used to describe eighth resolution sub-pixels within an image.

Detailed Description

Figures 1 to 5, 12a, 12b, 12c, 13a, 13b, and 13c have been described in the foregoing.

Figure 6 presents a terminal device comprising video encoding and decoding equipment which may be adapted to operate in accordance with the present invention. More precisely, the figure illustrates a multimedia terminal 60 implemented according to ITU-T recommendation H.324. The terminal can be regarded as a multimedia transceiver device. It includes elements that capture, encode and multiplex multimedia data streams for transmission via a communications network, as well as elements that receive, de-multiplex, decode and display received multimedia content. ITU-T recommendation H.324 defines the overall operation of the terminal and refers to other recommendations that govern the operation of its various constituent parts. This kind of multimedia terminal can be used in real-time applications such as conversational videotelephony, or non real-time applications such as the retrieval/streaming of video clips, for example from a multimedia content server in the Internet.

In the context of the present invention, it should be appreciated that the H.324 terminal shown in Figure 6 is only one of a number of alternative multimedia terminal implementations suited to application of the inventive method. It should also be noted that a number of alternatives exist relating to the location and implementation of the terminal equipment. As illustrated

in Figure 6, the multimedia terminal may be located in communications equipment connected to a fixed line telephone network such as an analogue PSTN (Public Switched Telephone Network). In this case the multimedia terminal is equipped with a modem 71, compliant with ITU-T recommendations V.8, V.34 and optionally V.8bis. Alternatively, the multimedia terminal may be connected to an external modem. The modem enables conversion of the multiplexed digital data and control signals produced by the multimedia terminal into an analogue form suitable for transmission over the PSTN. It further enables the multimedia terminal to receive data and control signals in analogue form from the PSTN and to convert them into a digital data stream that can be demulitplexed and processed in an appropriate manner by the terminal.

An H.324 multimedia terminal may also be implemented in such a way that it can be connected directly to a digital fixed line network, such as an ISDN (Integrated Services Digital Network). In this case the modem 71 is replaced with an ISDN user-network interface. In Figure 6, this ISDN user-network interface is represented by alternative block 72.

H.324 multimedia terminals may also be adapted for use in mobile communication applications. If used with a wireless communication link, the modem 71 can be replaced with any appropriate wireless interface, as represented by alternative block 73 in Figure 6. For example, an H.324/M multimedia terminal can include a radio transceiver enabling connection to the current 2nd generation GSM mobile telephone network, or the proposed 3rd generation UMTS (Universal Mobile Telephone System).

It should be noted that in multimedia terminals designed for two-way communication, that is for transmission and reception of video data, it is advantageous to provide both a video encoder and video decoder implemented according to the present invention. Such an encoder and

decoder pair is often implemented as a single combined functional unit, referred to as a 'codec'.

Because a video encoder according to the invention performs motion compensated video encoding to sub-pixel resolution using a specific interpolation scheme and a particular combination of before-hand and on-demand sub-pixel value interpolation, it is generally necessary for a video decoder of a receiving terminal to be implemented in a manner compatible with the encoder of the transmitting terminal which formed the compressed video data stream. Failure to ensure this compatibility may have an adverse effect on the quality of the motion compensation and the accuracy of reconstructed video frames.

A typical H.324 multimedia terminal will now be described in further detail with reference to Figure 6.

The multimedia terminal 60 includes a variety of elements referred to as 'terminal equipment'. This includes video, audio and telematic devices, denoted generically by reference numbers 61, 62 and 63, respectively. The video equipment 61 may include, for example, a video camera for capturing video images, a monitor for displaying received video content and optional video processing equipment. The audio equipment 62 typically includes a microphone, for example for capturing spoken messages, and a loudspeaker for reproducing received audio content. The audio equipment may also include additional audio processing units. The telematic equipment 63, may include a data terminal, keyboard, electronic whiteboard or a still image transceiver, such as a fax unit.

The video equipment 61 is coupled to a video codec 65. The video codec 65 comprises a video encoder and a corresponding video decoder both implemented according to the invention. Such an encoder and a decoder

Patent Owner's Exhibit 2003, p. 184
Amazon et al v. Nokia
IPR2024-01139

will be described in the following. The video codec 65 is responsible for encoding captured video data in an appropriate form for further transmission over a communications link and decoding compressed video content received from the communications network. In the example illustrated in Figure 6, the video codec is implemented according to ITU-T recommendation H.263, with appropriate modifications to implement the sub-pixel value interpolation method according to the invention in both the encoder and the decoder of the video codec.

Similarly, the terminal's audio equipment is coupled to an audio codec, denoted in Figure 6 by reference number 66. Like the video codec, the audio codec comprises an encoder/decoder pair. It converts audio data captured by the terminal's audio equipment into a form suitable for transmission over the communications link and transforms encoded audio data received from the network back into a form suitable for reproduction, for example on the terminal's loudspeaker. The output of the audio codec is passed to a delay block 67. This compensates for the delays introduced by the video coding process and thus ensures synchronisation of audio and video content.

The system control block 64 of the multimedia terminal controls end-to-network signalling using an appropriate control protocol (signalling block 68) to establish a common mode of operation between a transmitting and a receiving terminal. The signalling block 68 exchanges information about the encoding and decoding capabilities of the transmitting and receiving terminals and can be used to enable the various coding modes of the video encoder. The system control block 64 also controls the use of data encryption. Information regarding the type of encryption to be used in data transmission is passed from encryption block 69 to the multiplexer/de-multiplexer (MUX/DMUX unit) 70.

During data transmission from the multimedia terminal, the MUX/DMUX unit 70 combines encoded and synchronised video and audio streams with data input from the telematic equipment 63 and possible control data, to form a single bit-stream. Information concerning the type of data encryption (if any) to be applied to the bit-stream, provided by encryption block 69, is used to select an encryption mode. Correspondingly, when a multiplexed and possibly encrypted multimedia bit-stream is being received, MUX/DMUX unit 70 is responsible for decrypting the bit-stream, dividing it into its constituent multimedia components and passing those components to the appropriate codec(s) and/or terminal equipment for decoding and reproduction.

It should be noted that the functional elements of the multimedia terminal, video encoder, decoder and video codec according to the invention can be implemented as software or dedicated hardware, or a combination of the two. The video encoding and decoding methods according to the invention are particularly suited for implementation in the form of a computer program comprising machine-readable instructions for performing the functional steps of the invention. As such, the encoder and decoder according to the invention may be implemented as software code stored on a storage medium and executed in a computer, such as a personal desktop computer, in order to provide that computer with video encoding and/or decoding functionality.

If the multimedia terminal 60 is a mobile terminal, that is if it is equipped with a radio transceiver 73, it will be understood by those skilled in the art that it may also comprise additional elements. In one embodiment it comprises a user interface having a display and a keyboard, which enables operation of the multimedia terminal 60 by a user, together with necessary functional blocks including a central processing unit, such as a microprocessor, which controls the blocks responsible for different functions of the multimedia

terminal, a random access memory RAM, a read only memory ROM, and a digital camera. The microprocessor's operating instructions, that is program code corresponding to the basic functions of the multimedia terminal 60, is stored in the read-only memory ROM and can be executed as required by the microprocessor, for example under control of the user. In accordance with the program code, the microprocessor uses the radio transceiver 73 to form a connection with a mobile communication network, enabling the multimedia terminal 60 to transmit information to and receive information from the mobile communication network over a radio path.

The microprocessor monitors the state of the user interface and controls the digital camera. In response to a user command, the microprocessor instructs the camera to record digital images into the RAM. Once an image is captured, or alternatively during the capturing process, the microprocessor segments the image into image segments (for example macroblocks) and uses the encoder to perform motion compensated encoding for the segments in order to generate a compressed image sequence as explained in the foregoing description. A user may command the multimedia terminal 60 to display the captured images on its display or to send the compressed image sequence using the radio transceiver 73 to another multimedia terminal, a video telephone connected to a fixed line network (PSTN) or some other telecommunications device. In a preferred embodiment, transmission of image data is started as soon as the first segment is encoded so that the recipient can start a corresponding decoding process with a minimum delay.

Figure 11 is a schematic diagram of a mobile telecommunications network according to an embodiment of the invention. Multimedia terminals MS are in communication with base stations BTS by means of a radio link. The base stations BTS are further connected, through a so-called Abis interface

to a base station controller BSC, which controls and manages several base stations.

The entity formed by a number of base stations BTS (typically, by a few tens of base stations) and a single base station controller BSC, controlling the base stations, is called a base station subsystem BSS. Particularly, the base station controller BSC manages radio communication channels and handovers. The base station controller BSC is also connected, through a so-called A interface, to a mobile services switching centre MSC, which co-ordinates the formation of connections to and from mobile stations. A further connection is made, through the mobile service switching centre MSC, to outside the mobile communications network. Outside the mobile communications network there may further reside other network(s) connected to the mobile communications network by gateway(s) GTW, for example the Internet or a Public Switched Telephone Network (PSTN). In such an external network, or within the telecommunications network, there may be located video decoding or encoding stations, such as computers PC. In an embodiment of the invention, the mobile telecommunications network comprises a video server VSRVR to provide video data to a MS subscribing to such a service. The video data is compressed using the motion compensated video compression method as described in the foregoing. The video server may function as a gateway to an online video source or it may comprise previously recorded video clips. Typical videotelephony applications may involve, for example, two mobile stations or one mobile station MS and a videotelephone connected to the PSTN, a PC connected to the Internet or a H.261 compatible terminal connected either to the Internet or to the PSTN.

Figure 7 shows a video encoder 700 according to an embodiment the invention. Figure 8 shows a video decoder 800 according to an embodiment the invention.

Patent Owner's Exhibit 2003, p. 188
Amazon et al v. Nokia
IPR2024-01139

The encoder 700 comprises an input 701 for receiving a video signal from a camera or other video source (not shown). It further comprises a DCT transformer 705, a quantiser 706, an inverse quantiser 709, an inverse DCT transformer 710, combiners 712 and 716, a before-hand sub-pixel interpolation block 730, a frame store 740 and an on-demand sub-pixel interpolation block 750, implemented in combination with motion estimation block 760. The encoder also comprises a motion field coding block 770 and a motion compensated prediction block 780. Switches 702 and 714 are operated co-operatively by a control manager 720 to switch the encoder between an INTRA-mode of video encoding and an INTER-mode of video encoding. The encoder 700 also comprises a multiplexer unit (MUX/DMUX) 790 to form a single bit-stream from the various types of information produced by the encoder 700 for further transmission to a remote receiving terminal, or for example for storage on a mass storage medium such as a computer hard drive (not shown).

It should be noted that the presence and implementations of before-hand sub-pixel interpolation block 730 and on-demand sub-pixel value interpolation block 750 in the encoder architecture depend on the way in which the sub-pixel interpolation method according to the invention is applied. In embodiments of the invention in which before-hand sub-pixel value interpolation is not performed, encoder 700 does not comprise before-hand sub-pixel value interpolation block 730. In other embodiments of the invention, only before-hand sub-pixel interpolation is performed and thus the encoder does not include on-demand sub-pixel value interpolation block 750. In embodiments in which both before-hand and on-demand sub-pixel value interpolation are performed, both blocks 730 and 750 are present in the encoder 700.

Operation of the encoder 700 according to the invention will now be described in detail. In the description, it will be assumed that each frame of uncompressed video, received from the video source at the input 701, is received and processed on a macroblock-by-macroblock basis, preferably in raster-scan order. It will further be assumed that when the encoding of a new video sequence starts, the first frame of the sequence is encoded in INTRA-mode. Subsequently, the encoder is programmed to code each frame in INTER-format, unless one of the following conditions is met: 1) it is judged that the current frame being coded is so dissimilar from the reference frame used in its prediction that excessive prediction error information is produced; 2) a predefined INTRA frame repetition interval has expired; or 3) feedback is received from a receiving terminal indicating a request for a frame to be coded in INTRA format.

The occurrence of condition 1) is detected by monitoring the output of the combiner 716. The combiner 716 forms a difference between the current macroblock of the frame being coded and its prediction, produced in the motion compensated prediction block 780. If a measure of this difference (for example a sum of absolute differences of pixel values) exceeds a predetermined threshold, the combiner 716 informs the control manager 720 via a control line 717 and the control manager 720 operates the switches 702 and 714 so as to switch the encoder 700 into INTRA coding mode. Occurrence of condition 2) is monitored by means of a timer or frame counter implemented in the control manager 720, in such a way that if the timer expires, or the frame counter reaches a predetermined number of frames, the control manager 720 operates the switches 702 and 714 to switch the encoder into INTRA coding mode. Condition 3) is triggered if the control manager 720 receives a feedback signal from, for example, a receiving terminal, via control line 718 indicating that an INTRA frame refresh is required by the receiving terminal. Such a condition might arise, for example, if a previously transmitted frame were badly corrupted by

Patent Owner's Exhibit 2003, p. 190
Amazon et al v. Nokia
IPR2024-01139

interference during its transmission, rendering it impossible to decode at the receiver. In this situation, the receiver would issue a request for the next frame to be encoded in INTRA format, thus re-initialising the coding sequence.

It will further be assumed that the encoder and decoder are implemented in such a way as to allow the determination of motion vectors with a spatial resolution of up to quarter-pixel resolution. As will be seen in the following, finer levels of resolution are also possible.

Operation of the encoder 700 in INTRA coding mode will now be described. In INTRA-mode, the control manager 720 operates the switch 702 to accept video input from input line 719. The video signal input is received macroblock by macroblock from input 701 via the input line 719 and each macroblock of original image pixels is transformed into DCT coefficients by the DCT transformer 705. The DCT coefficients are then passed to the quantiser 706, where they are quantised using a quantisation parameter QP. Selection of the quantisation parameter QP is controlled by the control manager 720 via control line 722. Each DCT transformed and quantised macroblock that makes up the INTRA coded image information 723 of the frame is passed from the quantiser 706 to the MUX/DMUX 790. The MUX/DMUX 790 combines the INTRA coded image information with possible control information (for example header data, quantisation parameter information, error correction data etc.) to form a single bit-stream of coded image information 725. Variable length coding (VLC) is used to reduce redundancy of the compressed video bit-stream, as is known to those skilled in the art.

A locally decoded picture is formed in the encoder 700 by passing the data output by the quantiser 706 through inverse quantiser 709 and applying an inverse DCT transform 710 to the inverse-quantised data. The resulting

Patent Owner's Exhibit 2003, p. 191
Amazon et al v. Nokia
IPR2024-01139

data is then input to the combiner 712. In INTRA mode, switch 714 is set so that the input to the combiner 712 via the switch 714 is set to zero. In this way, the operation performed by the combiner 712 is equivalent to passing the decoded image data formed by the inverse quantiser 709 and the inverse DCT transform 710 unaltered.

In embodiments of the invention in which before-hand sub-pixel value interpolation is performed, the output from combiner 712 is applied to before-hand sub-pixel interpolation block 730. The input to the before-hand sub-pixel value interpolation block 730 takes the form of decoded image blocks. In the before-hand sub-pixel value interpolation block 730, each decoded macroblock is subjected to sub-pixel interpolation in such a way that a predetermined sub-set of sub-pixel resolution sub-pixel values is calculated according to the interpolation method of the invention and is stored together with the decoded pixel values in frame store 740.

In embodiments in which before-hand sub-pixel interpolation is not performed, before-hand sub-pixel interpolation block is not present in the encoder architecture and the output from combiner 712, comprising decoded image blocks, is applied directly to frame store 740.

As subsequent macroblocks of the current frame are received and undergo the previously described coding and decoding steps in blocks 705, 706, 709, 710, 712, a decoded version of the INTRA frameis built up in the frame store 740. When the last macroblock of the current frame has been INTRA coded and subsequently decoded, the frame store 740 contains a completely decoded frame, available for use as a prediction reference frame in coding a subsequently received video frame in INTER format. In embodiments of the invention in which before-hand sub-pixel value interpolation is performed, the reference frame held in frame store 740 is at least partially interpolated to sub-pixel resolution.

Operation of the encoder 700 in INTER coding mode will now be described. In INTER coding mode, the control manager 720 operates switch 702 to receive its input from line 721, which comprises the output of the combiner 716. The combiner 716 forms prediction error information representing the difference between the current macroblock of the frame being coded and its prediction, produced in the motion compensated prediction block 780. The prediction error information is DCT transformed in block 705 and quantised in block 706 to form a macroblock of DCT transformed and quantised prediction error information. Each macroblock of DCT transformed and quantised prediction error information is passed from the quantiser 706 to the MUX/DMUX unit 790. The MUX/DMUX unit 790 combines the prediction error information 723 with motion coefficients 724 (described in the following) and control information (for example header data, quantisation parameter information, error correction data etc.) to form a single bit-stream of coded image information, 725.

Locally decoded prediction error information for the each macroblock of the INTER coded frame is then formed in the encoder 700 by passing the encoded prediction error information 723 output by the quantiser 706 through the inverse quantiser 709 and applying an inverse DCT transform in block 710. The resulting locally decoded macroblock of prediction error information is then input to combiner 712. In INTER-mode, switch 714 is set so that the combiner 712 also receives motion predicted macroblocks for the current INTER frame, produced in the motion compensated prediction block 780. The combiner 712 combines these two pieces of information to produce reconstructed image blocks for the current INTER frame.

As described above when considering INTRA coded frames, in embodiments of the invention in which before-hand sub-pixel value interpolation is performed, the output from combiner 712 is applied to the

Patent Owner's Exhibit 2003, p. 193
Amazon et al v. Nokia
IPR2024-01139

before-hand sub-pixel interpolation block 730. Thus, the input to the before-hand sub-pixel value interpolation block 730 in INTER coding mode also takes the form of decoded image blocks. In the before-hand sub-pixel value interpolation block 730, each decoded macroblock is subjected to sub-pixel interpolation in such a way that a predetermined sub-set of sub-pixel values is calculated according to the interpolation method of the invention and is stored together with the decoded pixel values in frame store 740. In embodiments in which before-hand sub-pixel interpolation is not performed, before-hand sub-pixel interpolation block is not present in the encoder architecture and the output from combiner 712, comprising decoded image blocks, is applied directly to frame store 740.

As subsequent macroblocks of the video signal are received from the video source and undergo the previously described coding and decoding steps in blocks 705, 706, 709, 710, 712, a decoded version of the INTER frame is built up in the frame store 740. When the last macroblock of the frame has been INTER coded and subsequently decoded, the frame store 740 contains a completely decoded frame, available for use as a prediction reference frame in encoding a subsequently received video frame in INTER format. In embodiments of the invention in which before-hand sub-pixel value interpolation is performed, the reference frame held in frame store 740 is at least partially interpolated to sub-pixel resolution.

Formation of a prediction for a macroblock of the current frame will now be described.

Any frame encoded in INTER format requires a reference frame for motion compensated prediction. This means, inter alia, that when encoding a video sequence, the first frame to be encoded, whether it is the first frame in the sequence, or some other frame, must be encoded in INTRA format. This, in turn, means that when the video encoder 700 is switched into INTER coding

mode by control manager 720, a complete reference frame, formed by locally decoding a previously encoded frame, is already available in the frame store 740 of the encoder. In general, the reference frame is formed by locally decoding either an INTRA coded frame or an INTER coded frame.

The first step in forming a prediction for a macroblock of the current frame is performed by motion estimation block 760. The motion estimation block 760 receives the current macroblock of the frame being coded via line 727 and performs a block matching operation in order to identify a region in the reference frame which corresponds substantially with the current macroblock. According to the invention, the block-matching process is performed to sub-pixel resolution in a manner that depends on the implementation of the encoder 700 and the degree of before-hand sub-pixel interpolation performed. However, the basic principle behind the block-matching process is similar in all cases. Specifically, motion estimation block 760 performs block-matching by calculating difference values (e.g. sums of absolute differences) representing the difference in pixel values between the macroblock of the current frame under examination and candidate best-matching regions of pixels / sub-pixels in the reference frame. A difference value is produced for all possible offsets (e.g. quarter- or one eighth sub-pixel precision x, y displacements) between the macroblock of the current frame and candidate test region within a predefined search region of the reference frame and motion estimation block 760 determines the smallest calculated difference value. The offset between the macroblock in the current frame and the candidate test region of pixel values / sub-pixel values in the reference frame that yields the smallest difference value defines the motion vector for the macroblock in question. In certain embodiments of the invention, an initial estimate for the motion vector having unit pixel precision is first determined and then refined to a finer level of sub-pixel precision, as described in the foregoing.

In embodiments of the encoder in which before-hand sub-pixel value interpolation is not performed, all sub-pixel values required in the block matching process are calculated in on-demand sub-pixel value interpolation block 750. Motion estimation block 760 controls on-demand sub-pixel value interpolation block 750 to calculate each sub-pixel value needed in the block-matching process in an on-demand fashion, as and when it is required. In this case, motion estimation block 760 may be implemented so as to perform block-matching as a one-step process, in which case a motion vector with the desired sub-pixel resolution is sought directly, or it may be implemented so as to perform block-matching as a two step process. If the two-step process is adopted, the first step may comprise a search for e.g. a full or half-pixel resolution motion vector and the second step is performed in order to refine the the motion vector to the desired sub-pixel resolution. As block matching is an exhaustive process, in which blocks of n x m pixels in the current frame are compared one-by-one with blocks of n x m pixels or sub-pixels in the interpolated reference frame, it should be appreciated that a sub-pixel calculated in an on-demand fashion by the on-demand pixel interpolation block 750 may need to be calculated multiple times as successive difference values are determined. In a video encoder, this approach is not the most efficient possible in terms of computational complexity / burden.

In embodiments of the encoder which use only before-hand sub-pixel value interpolation, block-matching may be performed as a one step process, as all sub-pixel values of the reference frame required to determine a motion vector with the desired sub-pixel resolution are calculated before-hand in block 730 and stored in frame store 740. Thus, they are directly available for use in the block-matching process and can be retrieved as required from frame store 740 by motion estimation block 760. However, even in the case where all sub-pixel values are available from frame store 740, it is still more computationally efficient to perform block-matching as a two-step process,

Patent Owner's Exhibit 2003, p. 196
Amazon et al v. Nokia
IPR2024-01139

as fewer difference calculations are required. It should be appreciated that while full before-hand sub-pixel value interpolation reduces computational complexity in the encoder, it is not the most efficient approach in terms of memory consumption.

In embodiments of the encoder in which both before-hand and on-demand sub-pixel value interpolation are used, motion estimation block 760 is implemented in such a way that it can retrieve sub-pixel values previously calculated in before-hand sub-pixel value interpolation block 730 and stored in frame store 740 and further control on-demand sub-pixel value interpolation block 750 to calculate any additional sub-pixel values that may be required. The block-matching process may be performed as a one-step or a two-step process. If a two-step implementation is used, before-hand calculated sub-pixel values retrieved from frame store 740 may be used in the first step of the process and the second step may be implemented so as to use sub-pixel values calculated by on-demand sub-pixel value interpolation block 750. In this case, certain sub-pixel values used in the second step of the block matching process may need to be calculated multiple times as successive comparisons are made, but the number of such duplicate calculations is significantly less than if before-hand sub-pixel value calculation is not used. Furthermore, memory consumption is reduced with respect to embodiments in which only before-hand sub-pixel value interpolation is used.

Once the motion estimation block 760 has produced a motion vector for the macroblock of the current frame under examination, it outputs the motion vector to the motion field coding block 770. Motion field coding block 770 then approximates the motion vector received from motion estimation block 760 using a motion model. The motion model generally comprises a set of basis functions. More specifically, the motion field coding block 770 represents the motion vector as a set of coefficient values (known as motion

coefficients) which, when multiplied by the basis functions, form an approximation of the motion vector. The motion coefficients 724 are passed from motion field coding block 770 to motion compensated prediction block 780. Motion compensated prediction block 780 also receives the pixel / sub-pixel values of the best-matching candidate test region of the reference frame identified by motion estimation block 760. In Figure 7, these values are shown to be passed via line 729 from on-demand sub-pixel interpolation block 750. In alternative embodiments of the invention, the pixel values in question are provided from the motion estimation block 760 itself.

Using the approximate representation of the motion vector generated by motion field coding block 770 and the pixel / sub-pixel values of the best-matching candidate test region, motion compensated prediction block 780 produces a macroblock of predicted pixel values. The macroblock of predicted pixel values represents a prediction for the pixel values of the current macroblock generated from the interpolated reference frame. The macroblock of predicted pixel values is passed to the combiner 716 where it is subtracted from the new current frame in order to produce prediction error information 723 for the macroblock, as described in the foregoing.

The motion coefficients 724 formed by motion field coding block are also passed to the MUX/DMUX unit 790, where they are combined with prediction error information 723 for the macroblock in question and possible control information from control manager 720 to form an encoded video stream 725 for transmission to a receiving terminal.

Operation of a video decoder 800 according to the invention will now be described. Referring to Figure 8, the decoder 800 comprises a demultiplexing unit (MUX/DMUX) 810, which receives the encoded video stream 725 from the encoder 700 and demultiplexes it, an inverse quantiser 820, an inverse DCT transformer 830, a motion compensated prediction

Patent Owner's Exhibit 2003, p. 198
Amazon et al v. Nokia
IPR2024-01139

block 840, a frame store 850, a combiner 860, a control manager 870, an output 880, before-hand sub-pixel value interpolation block 845 and on-demand sub-pixel interpolation block 890 associated with the motion compensated prediction block 840. In practice the control manager 870 of the decoder 800 and the control manager 720 of the encoder 700 may be the same processor. This may be the case if the encoder 700 and decoder 800 are part of the same video codec.

Figure 8 shows an embodiment in which a combination of before-hand and on-demand sub-pixel value interpolation is used in the decoder. In other embodiments, only before-hand sub-pixel value interpolation is used, in which case decoder 800 does not include on-demand sub-pixel value interpolation block 890. In a preferred embodiment of the invention, no before-hand sub-pixel value interpolation is used in the decoder and therefore before-hand sub-pixel value interpolation block 845 is omitted from the decoder architecture. If both before-hand and on-demand sub-pixel value interpolation are performed, the decoder comprises both blocks 845 and 890.

The control manager 870 controls the operation of the decoder 800 in response to whether an INTRA or an INTER frame is being decoded. An INTRA / INTER trigger control signal, which causes the decoder to switch between decoding modes is derived, for example, from picture type information provided in the header portion of each compressed video frame received from the encoder. The INTRA / INTER trigger control signal is passed to control manager 870 via control line 815, together with other video codec control signals demultiplexed from the encoded video stream 725 by the MUX/DMUX unit 810.

When an INTRA frame is decoded, the encoded video stream 725 is demultiplexed into INTRA coded macroblocks and control information. No

motion vectors are included in the encoded video stream 725 for an INTRA coded frame. The decoding process is performed macroblock-by-macroblock. When the encoded information 723 for a macroblock is extracted from video stream 725 by MUX/DMUX unit 810, it is passed to inverse quantiser 820. The control manager controls inverse quantiser 820 to apply a suitable level of inverse quantisation to the macroblock of encoded information, according to control information provided in video stream 725. The inverse quantised macroblock is then inversely transformed in the inverse DCT transformer 830 to form a decoded block of image information. Control manager 870 controls combiner 860 to prevent any reference information being used in the decoding of the INTRA coded macroblock. The decoded block of image information is passed to the video output 880 of the decoder.

In embodiments of the decoder which employ before-hand sub-pixel value interpolation, the decoded block of image information (i.e. pixel values) produced as a result of the inverse quantisation and inverse transform operations performed in blocks 820 and 830 is passed to before-hand sub-pixel value interpolation block 845. Here, sub-pixel value interpolation is performed according to the method of the invention, the degree of before-hand sub-pixel value interpolation applied being determined by the details of the decoder implementation. In embodiments of the invention in which on-demand sub-pixel value interpolation is not performed, before-hand sub-pixel value interpolation block 845 interpolates all sub-pixelvalues. In embodiments that use a combination of before-hand and on-demand sub-pixel value interpolation, before-hand sub-pixel value interpolation block 845 interpolates a certain sub-set of sub-pixel values. This may comprise, for example, all sub-pixels at half-pixel locations, or a combination of sub-pixels at half-pixel and one quarter-pixel locations. In any case, after before-hand sub-pixel value interpolation, the interpolated sub-pixel values are stored in frame store 850, together with the original decoded pixel values. As

Patent Owner's Exhibit 2003, p. 200
Amazon et al v. Nokia
IPR2024-01139

subsequent macroblocks are decoded, before-hand interpolated and stored, a decoded frame, at least partially interpolated to sub-pixel resolution is progressively assembled in the frame store 850 and becomes available for use as a reference frame for motion compensated prediction.

In embodiments of the decoder which do not employ before-hand sub-pixel value interpolation, the decoded block of image information (i.e. pixel values) produced as a result of the inverse quantisation and inverse transform operations performed on the macroblock in blocks 820 and 830 is passed directly to frame store 850. As subsequent macroblocks are decoded and stored, a decoded frame, having unit pixel resolution is progressively assembled in the frame store 850 and becomes available for use as a reference frame for motion compensated prediction.

When an INTER frame is decoded, the encoded video stream 725 is demultiplexed into encoded prediction error information 723 for each macroblock of the frame, associated motion coefficients 724 and control information. Again, the decoding process is performed macroblock-by-macroblock. When the encoded prediction error information 723 for a macroblock is extracted from the video stream 725 by MUX/DMUX unit 810, it is passed to inverse quantiser 820. Control manager 870 controls inverse quantiser 820 to apply a suitable level of inverse quantisation to the macroblock of encoded prediction error information, according to control information received in video stream 725. The inverse quantised macroblock of prediction error information is then inversely transformed in the inverse DCT transformer 830 to yield decoded prediction error information for the macroblock.

The motion coefficients 724 associated with the macroblock in question are extracted from the video stream 725 by MUX/DMUX unit 810 and passed to motion compensated prediction block 840, which reconstructs a motion

Patent Owner's Exhibit 2003, p. 201
Amazon et al v. Nokia
IPR2024-01139

vector for the macroblock using the same motion model as that used to encode the INTER-coded macroblock in encoder 700. The reconstructed motion vector approximates the motion vector originally determined by motion estimation block 760 of the encoder. The motion compensated prediction block 840 of the decoder uses the reconstructed motion vector to identify the location of a block of pixel / sub-pixel values in a prediction reference frame stored in frame store 850. The reference frame may be, for example, a previously decoded INTRA frame, or a previously decoded INTER frame. In either case, the block of pixel / sub-pixel values indicated by the reconstructed motion vector, represents the prediction of the macroblock in question.

The reconstructed motion vector may point to any pixel or sub-pixel. If the motion vector indicates that the prediction for the current macroblock is formed from pixel values (i.e. the values of pixels at unit pixel locations), these can simply be retrieved from frame store 850, as the values in question are obtained directly during the decoding of each frame. If the motion vector indicates that the prediction for the current macroblock is formed from sub-pixel values, these must either be retrieved from frame store 850, or calculated in on-demand sub-pixel interpolation block 890. Whether sub-pixel values must be calculated, or can simply be retrieved from the frame store, depends on the degree of before-hand sub-pixel value interpolation used in the decoder.

In embodiments of the decoder that do not employ before-hand sub-pixel value interpolation, the required sub-pixel values are all calculated in on-demand sub-pixel value interpolation block 890. On the other hand, in embodiments in which all sub-pixel values are interpolated before-hand, motion compensated prediction block 840 can retrieve the required sub-pixel values directly from the frame store 850. In embodiments that use a combination before-hand and on-demand sub-pixel value interpolation, the

action required in order to obtain the required sub-pixel values depends on which sub-pixel values are interpolated before-hand. Taking as an example an embodiment in which all sub-pixel values at half-pixel locations are calculated before-hand, it is evident that if a reconstructed motion vector for a macroblock points to a pixel at unit location or a sub-pixel at half-pixel location, all the pixel or sub-pixel values required to form the prediction for the macroblock are present in the frame store 850 and can be retrieved from there by motion compensated prediction block 840. If, however, the motion vector indicates a sub-pixel at a quarter-pixel location, the sub-pixels required to form the prediction for the macroblock are not present in frame store 850 and are therefore calculated in on-demand sub-pixel value interpolation block 890. In this case, on-demand sub-pixel value interpolation block 890 retrieves any pixel or sub-pixel required to perform the interpolation from frame store 850 and applies the interpolation method described below. Sub-pixel values calculated in on-demand sub-pixel value interpolation block 890 are passed to motion compensated prediction block 840.

Once a prediction for a macroblock has been obtained, the prediction (that is, a macroblock of predicted pixel values) is passed from motion compensated prediction block 840 to combiner 860 where it combined with the decoded prediction error information for the macroblock to form a reconstructed image block which, in turn, is passed to the video output 880 of the decoder.

It should be appreciated that in practical implementations of encoder 700 and decoder 800, the extent to which frames are before-hand sub-pixel interpolated, and thus the amount of on-demand sub-pixel value interpolation that is performed, can be chosen according to, or dictated by, the hardware implementation of the video encoder 700, or the environment in which it is intended to be used. For example, if the memory available to

Patent Owner's Exhibit 2003, p. 203
Amazon et al v. Nokia
IPR2024-01139

the video encoder is limited, or memory must be reserved for other functions, it is appropriate to limit the amount of before-hand sub-pixel value interpolation that is performed. In other cases, where the microprocessor performing the video encoding operation has limited processing capacity, e.g. the number of operations per second that can be executed is comparatively low, it is more appropriate to restrict the amount of on-demand sub-pixel value interpolation that is performed. In a mobile communications environment, for example, when video encoding and decoding functionality is incorporated in a mobile telephone or similar wireless terminal for communication with a mobile telephone network, both memory and processing power may be limited. In this case a combination of before-hand and on-demand sub-pixel value interpolation may be the best choice to obtain an efficient implementation in the video encoder. In video decoder 800, use of before-hand sub-pixel value is generally not preferred, as it typically results in the calculation of many sub-pixel values that are not actually used in the decoding process. However, it should be appreciated that although different amounts of before-hand and on-demand interpolation can be used in the encoder and decoder in order to optimise the operation of each, both encoder and decoder can be implemented so as to use the same division between before-hand and on-demand sub-pixel value interpolation.

Although the foregoing description does not describe the construction of bi-directionally predicted frames (B-frames) in the encoder 700 and the decoder 800, it should be understood that in embodiments of the invention, such a capability may be provided. Provision of such capability is considered within the ability of one skilled in the art.

An encoder 700 or a decoder 800 according to the invention can be realised using hardware or software, or using a suitable combination of both. An encoder or decoder implemented in software may be, for example, a

Patent Owner's Exhibit 2003, p. 204
Amazon et al v. Nokia
IPR2024-01139

separate program or a software building block that can be used by various programs. In the above description and in the drawings, the functional blocks are represented as separate units, but the functionality of these blocks can be implemented, for example, in one software program unit.

The encoder 700 and decoder 800 can further be combined in order to form a video codec having both encoding and decoding functionality. In addition to being implemented in a multimedia terminal, such a codec may also be implemented in a network. A codec according to the invention may be a computer program or a computer program element, or it may be implemented at least partly using hardware.

The sub-pixel interpolation method used in the encoder 700 and decoder 800 according to the invention now be described in detail. The method will first be introduced at a general conceptual level and then two preferred embodiments will be described. In the first preferred embodiment, sub-pixel value interpolation is performed to ¼ pixel resolution and in the second the method is extended to ⅛ pixel resolution.

It should be noted that interpolation must produce identical values in the encoder and the decoder, but its implementation should be optimized for both entities separately. For example, in an encoder according to the first embodiment of the invention in which sub-pixel value interpolation is preformed to ¼ pixel resolution, it is most efficient to calculate ½ resolution pixels before-hand and to calculate values for ¼ resolution sub-pixels in an on-demand fashion, only when they are needed during motion estimation. This has the effect of limiting memory usage while keeping the computational complexity / burden at an acceptable level. In the decoder, on the other hand, it is advantageous not to pre-calculate any of the sub-pixels. Therefore, it should be appreciated that a preferred embodiment of the decoder does not include before-hand sub-pixel value interpolation.

Patent Owner's Exhibit 2003, p. 205
Amazon et al v. Nokia
IPR2024-01139

block 845 and all sub-pixel value interpolation is performed in on-demand sub-pixel value interpolation block 890.

In the description of the interpolation method provided below, references are made to the pixel positions depicted in Figure 14a. In this figure pixels labelled A represent original pixels (that is, pixels residing at unit horizontal and vertical locations). Pixels labelled with other letters represent sub-pixels that are to be interpolated. The description that follows will adhere to the previously introduced conventions regarding the description of pixel and sub-pixel locations.

Next, the steps required to interpolate all sub-pixel positions are described:

Values for the ½ resolution sub-pixels labelled b are obtained by first calculating an intermediate value *b* using a Kth order filter, according to:

$$b = \sum_{i=1}^{K} \mathbf{x}_i \cdot \mathbf{A}_i \qquad (9)$$

where $\mathbf{x}_i$ is a vector of filter coefficients, $\mathbf{A}_i$ is a corresponding vector of original pixel values A situated at unit horizontal and unit vertical locations, and K is an integer which defines the order of the filter. Thus, equation 9 can be re-expressed as:

$$b = x_1 A_1 + x_2 A_2 + x_3 A_3 + ... + x_{K-1} A_{K-1} + x_K A_K \qquad (10)$$

The values of the filter coefficients x_i and the order of the filter K may vary from embodiment to embodiment. Equally, different coefficient values may be used in the calculation of different sub-pixels within an embodiment. In other embodiments, the values of filter coefficients x_i and the order of the filter may depend on which of the ½ resolution b sub-pixels is being

interpolated. Pixels A_i are disposed symmetrically with respect to the ½ resolution sub-pixel b being interpolated and are the closest neighbours of that sub-pixel. In the case of the ½ resolution sub-pixel b situated at half horizontal and unit vertical location, pixels A_i are disposed horizontally with respect to b (as shown in Figure 14b). If the ½ resolution sub-pixel b situated at unit horizontal and half vertical location is being interpolated, pixels A_i are disposed vertically with respect to b (as shown in Figure 14c).

A final value for ½ resolution sub-pixel b is calculated by dividing intermediate value *b* by a constant $scale_1$, truncating it to obtain an integer number and clipping the result to lie in the range $[0, 2^n-1]$. In alternative embodiments of the invention rounding may be performed instead of truncation. Preferably, constant $scale_1$ is chosen to be equal to the sum of filter coefficients x_i.

A value for the ½ resolution sub-pixel labelled c is also obtained by first calculating an intermediate value *c* using an Mth order filter, according to:

$$c = \sum_{i=1}^{M} \mathbf{y}_i \boldsymbol{b}_i \qquad (11)$$

where $\mathbf{y}_i$ is a vector of filter coefficients, $\boldsymbol{b}_i$ is a corresponding vector of intermediate values b_i in the horizontal or vertical direction. i.e.:

$$c = y_1 b_1 + y_2 b_2 + y_3 b_3 + ... + y_{M-1} b_{M-1} + y_M b_M \qquad (12)$$

The values of the filter coefficients y_i and the order of the filter M may vary from embodiment to embodiment. Equally, different coefficient values may be used in the calculation of different sub-pixels within an embodiment. Preferably, the *b* values are intermediate values for ½ resolution sub-pixels b which are disposed symmetrically with respect to ½ resolution sub-pixel c and are the closest neighbours of sub-pixel c. In an embodiment of the

Patent Owner's Exhibit 2003, p. 207
Amazon et al v. Nokia
IPR2024-01139

invention, the ½ resolution sub-pixels b are disposed horizontally with respect to sub-pixel c, in an alternative embodiment they are disposed vertically with respect to sub-pixel c.

A final value of ½ resolution sub-pixel c is computed by dividing intermediate value *c* by a constant $scale_2$, truncating it to obtain an integer number and clipping the result to lie in the range $[0, 2^n-1]$. In alternative embodiments of the invention rounding may be performed instead of truncation. Preferably, constant $scale_2$ is equal to $scale_1 * scale_1$.

It should be noted that the use of intermediate values *b* in the horizontal direction leads to the same result as using intermediate values *b* in the vertical direction.

There are two alternatives for interpolating values for the ¼ resolution sub-pixels labelled h. Both involve linear interpolation along a diagonal line linking ½ resolution sub-pixels neighbouring the ¼ resolution sub-pixel h being interpolated. In a first embodiment, a value for sub-pixel h is calculated by averaging the values of the two ½ resolution sub-pixels b closest to sub-pixel h. In a second embodiment, a value for sub-pixel h is calculated by averaging the values of the closest pixel A and the closest ½ resolution sub-pixel c. It should be appreciated that this provides the possibility of using different combinations of diagonal interpolations to determine the values for sub-pixels h within the confines of different groups of 4 image pixels A. However, it should also be realised that the same combination should be used in both the encoder and the decoder in order to produce identical interpolation results. Figure 15 depicts 4 possible choices of diagonal interpolation for sub-pixels h in adjacent groups of 4 pixels within an image. Simulations in the TML environment have verified that both embodiments result in similar compression efficiency. The second embodiment has higher complexity, since calculation of sub-pixel c requires

Patent Owner's Exhibit 2003, p. 208
Amazon et al v. Nokia
IPR2024-01139

calculation of several intermediate values. Therefore the first embodiment is preferred.

Values for ¼ resolution sub-pixels labelled d and g are calculated from the values of their nearest horizontal neighbours using linear interpolation. In other words, a value for ¼ resolution sub-pixel d is obtained by averaging values of its nearest horizontal neighbours, original image pixel A and ½ resolution sub-pixel b. Similarly, a value for ¼ resolution sub-pixel g is obtained by taking the average of its two nearest horizontal neighbours, ½ resolution sub-pixels b and c.

Values for ¼ resolution sub-pixels labelled e, f and i are calculated from the values of their nearest neighbours in the vertical direction using linear interpolation. More specifically, a value for ¼ resolution sub-pixel e is obtained by averaging the values of its two nearest vertical neighbours, original image pixel A and ½ resolution sub-pixel b. Similarly, a value for ¼ resolution sub-pixel f is obtained by taking the average of its two nearest vertical neighbours, ½ resolution sub-pixels b and c. In an embodiment of the invention, a value for ¼ resolution sub-pixel i is obtained in manner identical to that just described in connection with ¼ resolution sub-pixel f. However, in an alternative embodiment of the invention, and in common with the H.26 test models TML5 and TML6 previously described, ¼ resolution sub-pixel i is determined using the values of the four closest original image pixels, according to $(A_1+A_2+A_3+A_4+2) / 4$.

It should also be noted that in all cases where an average involving pixel and / or sub-pixel values is determined, the average may be formed in any appropriate manner. For example, the value for ¼ resolution sub-pixel d can be defined as d = (A + b) / 2 or as d = (A + b + 1) / 2. The addition of 1 to the sum of values for pixel A and ½ resolution sub-pixel b has the effect of causing any rounding or truncation operation subsequently applied to round

or truncate the value for d to the next highest integer value. This is true for any sum of integer values and may be applied to any of the averaging operations performed according to the method of the invention in order to control rounding or truncation effects.

It should be noted that the sub-pixel value interpolation method according to the invention provides advantages over each of TML5 and TML6.

In contrast to TML5, in which the values of some of the ¼ resolution sub-pixels depend on previously interpolated values obtained for other ¼ resolution sub-pixels, in the method according to the invention, all ¼ resolution sub-pixels are calculated from original image pixels or ½ resolution sub-pixel positions using linear interpolation. Thus, the reduction in precision of those ¼ resolution sub-pixel values which occurs in TML5 due to the intermediate truncation and clipping of the other ¼ resolution sub-pixels from which they are calculated, does not take place in the method according to the invention. In particular, referring to Figure 14a, ¼ resolution sub-pixels h (and sub-pixel i in one embodiment of the invention) are interpolated diagonally in order to reduce dependency on other ¼-pixels. Furthermore, in the method according to the invention, the number of calculations (and therefore the number of processor cycles) required to obtain a value for those ¼ resolution sub-pixels in the decoder is reduced compared with TML5. Additionally, the calculation of any ¼ resolution sub-pixel value requires a number of calculations which is substantially similar to the number of calculations required to determine any other ¼ resolution sub-pixel value. More specifically, in a situation where the required ½ resolution sub-pixel values are already available, e.g. they have been calculated before-hand, the number of calculations required to interpolate a ¼ resolution sub-pixel value from the pre-calculated ½ resolution sub-pixel values is the same as the number of calculations required to calculate any

other ¼ resolution sub-pixel value from the available ½ resolution sub-pixel values.

In comparison with TML6, the method according to the invention does not require high precision arithmetic to be used in the calculation of all sub-pixels. Specifically, as all of the ¼ resolution sub-pixel values are calculated from original image pixels or ½ resolution sub-pixel values using linear interpolation, lower precision arithmetic can be used in their interpolation. Consequently, in hardware implementations of the inventive method, for example in an ASIC (Application Specific Integrated Circuit), the use of lower precision arithmetic reduces the number of components (e.g. gates) that must be devoted to the calculation of ¼ resolution sub-pixel values. This, in turn, reduces the overall area of silicon that must be dedicated to the interpolation function. As the majority of sub-pixels are, in fact, ¼ resolution sub-pixels (12 out of the 15 sub-pixels illustrated in Figure 14a), the advantage provided by the invention in this respect is particularly significant. In software implementations, where sub-pixel interpolation is performed using the standard instruction set of a general purpose CPU (Central Processor Unit) or using a DSP (Digital Signal Processor), a reduction in the precision of the arithmetic required generally leads to an increase in the speed at which the calculations can be performed. This is particularly advantageous in 'low cost' implementations, in which it is desirable to use a general purpose CPU rather than any form of ASIC.

The method according to the invention provides still further advantages compared with TML5. As mentioned previously, in the decoder only 1 out of the 15 sub-pixel positions is required at any given time, namely that which is indicated by received motion vector information. Therefore, it is advantageous if the value of a sub-pixel in any sub-pixel location can be calculated with the minimum number of steps that result in a correctly interpolated value. The method according to the invention provides this

capability. As mentioned in the detailed description provided above, ½ resolution sub-pixel c can be interpolated by filtering in either the vertical or the horizontal direction, the same value being obtained for c regardless of whether horizontal or vertical filtering is used. The decoder can therefore take advantage of this property when calculating values for ¼ resolution sub-pixels f and g in such a way as to minimise the number of operations required in order to obtain the required values. For example, if the decoder requires a value for ¼ resolution sub-pixel f, ½ resolution sub-pixel c should interpolated in the vertical direction. If a value is required for ¼ resolution sub-pixel g, it is advantageous to interpolate a value for c in the horizontal direction. Thus, in general, it can be said that the method according to the invention provides flexibility in the way in which values are derived for certain ¼ resolution sub-pixels. No such flexibility is provided in TML5.

Two specific embodiments will now be described in detail. The first represents a preferred embodiment for calculating sub-pixels with up to ¼ pixel resolution, while in the second, the method according to the invention is extended to the calculation of values for sub-pixels having up to ⅛ pixel resolution. For both embodiments a comparison is provided between the computational complexity / burden resulting from use of the method according to the invention and that which would result from use of the interpolation methods according to TML5 and TML6 in equivalent circumstances.

The preferred embodiment for interpolating sub-pixels at ¼ pixel resolution will be described with reference to Figures 14a, 14b and 14c. In the following, it will be assumed that all image pixels and final interpolated values for sub-pixels are represented with 8-bits.

Calculation of ½ resolution sub-pixels at i) half unit horizontal and unit vertical locations and ii) unit horizontal and half unit vertical locations

Patent Owner's Exhibit 2003, p. 212
Amazon et al v. Nokia
IPR2024-01139

1. A value for the sub-pixel at half unit horizontal and unit vertical location, that is ½ resolution sub-pixel b in Figure 14a, is obtained by first calculating intermediate value $b = (A_1 - 5A_2 + 20A_3 + 20A_4 - 5A_5 + A_6)$ using the values of the six pixels (A_1 to A_6) which are situated at unit horizontal and unit vertical locations in either the row or the column of pixels containing b and which are disposed symmetrically about b, as shown in Figures 14b and 14c. A final value for ½ resolution sub-pixel b is calculated as $(b + 16) / 32$ where the operator / denotes division with truncation. The result is clipped to lie in the range [0, 255].

Calculation of ½ resolution sub-pixels at half unit horizontal and half unit vertical locations.

2. A value for the sub-pixel at half unit horizontal and half unit vertical location, that is ½ resolution sub-pixel c in Figure 14a, is calculated as $c = (b_1 - 5b_2 + 20b_3 + 20b_4 - 5b_5 + b_6 + 512) / 1024$ using the intermediate values b for the six closest ½ resolution sub-pixels which are situated in either the row or the column of sub-pixels containing c and which are disposed symmetrically about c. Again, operator / denotes division with truncation and the result is clipped to lie in the range [0, 255]. As previously explained, using intermediate values b for ½ resolution sub-pixels b in the horizontal direction leads to the same result as using intermediate values b for ½ resolution sub-pixels b in the vertical direction. Thus, in an encoder according to the invention, the direction for interpolating ½ resolution sub-pixels b can be chosen according to a preferred mode of implementation. In a decoder according to the invention, the direction for interpolating sub-pixels b is chosen according to which, if any, ¼ resolution sub-pixels will be interpolated using the result obtained for ½ resolution sub-pixel c.

Calculation of ¼ resolution sub-pixels at i) quarter unit horizontal and unit vertical locations; ii) quarter unit horizontal and half unit vertical locations; iii)

Patent Owner's Exhibit 2003, p. 213
Amazon et al v. Nokia
IPR2024-01139

unit horizontal and quarter unit vertical locations; and iv) half unit horizontal and quarter unit vertical locations.

3. Values for ¼ resolution sub-pixels d, situated at quarter unit horizontal and unit vertical locations are calculated according to d = (A + b) / 2 using the nearest original image pixel A and the closest ½ resolution sub-pixel b in the horizontal direction. Similarly, values for ¼ resolution sub-pixels g, situated at quarter unit horizontal and half unit vertical locations are calculated according to g = (b + c) / 2 using the two nearest ½ resolution sub-pixels in the horizontal direction. In a similar manner, values for ¼ resolution sub-pixels e, situated at unit horizontal and quarter unit vertical locations, are calculated according e = (A + b) / 2 using the nearest original image pixel A and the closest ½ resolution sub-pixel b in the vertical direction. Values for ¼ resolution sub-pixels f, situated at half unit horizontal and quarter unit vertical locations, are determined from f = (b + c) / 2 using the two nearest ½ resolution sub-pixel in the vertical direction. In all cases, operator / denotes division with truncation.

Calculation of ¼ resolution sub-pixels at quarter unit horizontal and quarter unit vertical locations.

4. Values for ¼ resolution sub-pixels h, situated at quarter unit horizontal and quarter unit vertical locations are calculated according to $h = (b_1 + b_2) / 2$, using the two nearest ½ resolution sub-pixels b in the diagonal direction. Again, operator / denotes division with truncation.

5. A value for the ¼ resolution sub-pixel labeled i is computed from $i = (A_1 + A_2 + A_3 + A_4 + 2) / 4$ using the four nearest original pixels A. Once more, operator / denotes division with truncation.

An analysis of the computational complexity of the first preferred embodiment of the invention will now be presented.

In the encoder, it is likely that the same sub-pixel values will be calculated multiple times. Therefore, and as previously explained, the complexity of the encoder can be reduced by pre-calculating all sub-pixel values and storing them in memory. However, this solution increases memory usage by a large margin. In the preferred embodiment of the invention, in which motion vector accuracy is ¼ pixel resolution in both the horizontal and vertical dimensions, storing pre-calculated sub-pixel values for the whole image requires 16 times the memory required to store the original, non-interpolated image. To reduce memory usage, all ½ resolution sub-pixels can be interpolated before-hand and ¼ resolution sub-pixels can be calculated on-demand, that is, only when they are needed. According to the method of the invention, on-demand interpolation of values for ¼ resolution sub-pixels only requires linear interpolation from ½ resolution sub-pixels. Four times the original picture memory is required to store the pre-calculated ½ resolution sub-pixels since only 8 bits are necessary to represent them.

However, if the same strategy of pre-calculating all ½ resolution sub-pixels using before-hand interpolation is used in conjunction with the direct interpolation scheme of TML6, the memory requirements increase to 9 times the memory required to store the original non-interpolated image. This results from the fact that a larger number of bits is required to store the high precision intermediate values associated with each ½ resolution sub-pixel in TML6. In addition, the complexity of sub-pixel interpolation during motion estimation is higher in TML6, since scaling and clipping has to be performed for every ½ and ¼ sub-pixel location.

In the following, the complexity of the sub-pixel value interpolation method according to the invention, when applied in a video decoder, is compared with that of the interpolation schemes used in TML5 and TML6. Throughout

Patent Owner's Exhibit 2003, p. 215
Amazon et al v. Nokia
IPR2024-01139

the analysis which follows, it is assumed that in each method the interpolation of any sub-pixel value is performed using only the minimum number of steps required to obtain a correctly interpolated value. It is further assumed that each method is implemented in a block based manner, that is, intermediate values common for all the sub-pixels to be interpolated in a particular N x M block are calculated only once. An illustrative example is provided in Figure 16. Referring to Figure 16, it can be seen that in order to calculate a 4 x 4 block of ½ resolution sub-pixels c, a 9 x 4 block of ½ resolution sub-pixels b is first calculated.

Compared with the sub-pixel value interpolation method used in TML5, the method according to the invention has a lower computational complexity for the following reasons:

1. Unlike the sub-pixel value interpolation scheme used in TML5, according to the method of the invention, a value for ½ resolution sub-pixel c can be obtained by filtering in either the vertical or the horizontal direction. Thus, in order to reduce the number of operations, ½ resolution sub-pixel c can be interpolated in the vertical direction if a value for ¼ resolution sub-pixel f is required and in the horizontal direction if a value for ¼ resolution sub-pixel pixel g is required. As an example, Figure 17 shows all the ½ resolution sub-pixel values that must be calculated in order to interpolate values for ¼ resolution sub-pixels g in an image block defined by 4 x 4 original image pixels using the interpolation method of TML5 (Figure 17a) and using the method according to the invention (Figure 17b). In this example, the sub-pixel value interpolation method according to TML5 requires a total of 88 ½ resolution sub-pixels to be interpolated, while the method according to the invention requires the calculation of 72 ½ resolution sub-pixels. As can be seen from Figure 17b, according to the invention, ½ resolution

sub-pixels c are interpolated in the horizontal direction in order to reduce the number of calculations required.

2. According to the method of the invention, ¼ resolution sub-pixel h is calculated by linear interpolation from its two closest neighbouring ½ resolution sub-pixels in the diagonal direction. The respective numbers of ½ resolution sub-pixels that must be calculated in order to obtain values for ¼ resolution sub-pixels h within a 4 x 4 block of original image pixels using the sub-pixel value interpolation method according to TML5 and the method according to the invention are shown in Figures 18(a) and 18(b), respectively. Using the method according to TML5 it is necessary to interpolate a total of 56 ½ resolution sub-pixels, while according to the method of the invention it is necessary to interpolate 40 ½ resolution sub-pixels.

Table 1 summarizes the decoder complexities of the three sub-pixel value interpolation methods considered here, that according to TML5, the direct interpolation method used in TML6 and the method according to the invention. Complexity is measured in terms of the number of 6-tap filtering and linear interpolation operations performed. It is assumed that Interpolation of ¼ resolution sub-pixel i is calculated according to $i = (A_1 + A_2 + A_3 + A_4 + 2) / 4$ which is bilinear interpolation and effectively comprises two linear interpolation operations. The operations needed to interpolate sub-pixel values with one 4 x 4 block of original image pixels are listed for each of the 15 sub-pixel positions which, for convenience of reference, are numbered according to the scheme shown in Figure 19. Referring to Figure 19, location 1 is the location of an original image pixel A and locations 2 to16 are sub-pixel locations. Location 16 is the location of ¼ resolution sub-pixel i. In order to compute the average number of operations it has been assumed that the probability of a motion vector pointing to each sub-pixel position is the same. The average complexity is therefore the average of the

Patent Owner's Exhibit 2003, p. 217
Amazon et al v. Nokia
IPR2024-01139

15 sums calculated for each sub-pixel location and the single full-pixel location.

	TML5		TML6		Inventive Method	
Location	linear.	6-tap	linear.	6-tap	linear.	6-tap
1	0	0	0	0	0	0
3,9	0	16	0	16	0	16
2,4,5,13	16	16	0	16	16	16
11	0	52	0	52	0	52
7,15	16	52	0	52	16	52
10,12	16	68	0	52	16	52
6,8,14	48	68	0	52	16	32
16	32	0	32	0	32	0
Average	**19**	**37**	**2**	**32**	**13**	**28.25**

Table 1: Complexity of ¼ resolution sub-pixel interpolation in TML5, TML6 and the method according to the invention.

It can be seen from Table 1 that the method according to the invention requires fewer 6-tap filter operations than the sub-pixel value interpolation method according to TML6 and only a few additional linear interpolation operations. Since 6-tap filter operations are much more complex than linear interpolation operations the complexity of the two methods is similar. The sub-pixel value interpolation method according to TML5 has a considerably higher complexity.

The preferred embodiment for interpolating sub-pixels with up to ⅛ pixel resolution will now be described with reference to Figures 20, 21 and 22.

Figure 20 presents the nomenclature used to describe pixels, ½ resolution sub-pixels, ¼ resolution sub-pixels and ⅛ resolution sub-pixels in this extended application of the method according to the invention.

1. Values for the ½ resolution and ¼ resolution sub-pixels labelled b^1, b^2 and b^3 in Figure 20 are obtained by first calculating intermediate values.

Patent Owner's Exhibit 2003, p. 218
Amazon et al v. Nokia
IPR2024-01139

$b^1 = (-3A_1 + 12A_2 - 37A_3 + 229A_4 + 71A_5 - 21A_6 + 6A_7 - A_8)$; $b^2 = (-3A_1 + 12A_2 - 39A_3 + 158A_4 + 158A_5 - 39A_6 + 12A_7 - 3A_8)$; and $b^3 = (-A_1 + 6A_2 - 21A_3 + 71A_4 + 229A_5 - 37A_6 + 13A_7 - 3A_8)$ using the values of the eight nearest image pixels (A_1 to A_8) situated at unit horizontal and unit vertical locations in either the row or the column containing b^1, b^2 and b^3 and disposed symmetrically about ½ resolution sub-pixel b^2. The asymmetries in the filter coefficients used to obtain intermediate values b^1 and b^3 account for the fact that pixels A_1 to A_8 are not symmetrically located with respect to ¼ resolution sub-pixels b^1 and b^3. Final values for sub-pixels b^i, i=1, 2, 3 are calculated according to $b^i = (b^i + 128) / 256$ where the operator / denotes division with truncation. The result is clipped to lie in the range [0, 255].

2. Values for the ½ resolution and ¼ resolution sub-pixels labelled c^{ij}, i, j = 1, 2, 3, are calculated according to $c^{1j} = (-3b_1^j + 12b_2^j - 37b_3^j + 229b_4^j + 71b_5^j - 21b_6^j + 6b_7^j - b_8^j + 32768) / 65536$, $c^{2j} = (-3b_1^j + 12b_2^j - 39b_3^j + 158b_4^j + 158b_5^j - 39b_6^j + 12b_7^j - 3b_8^j + 32768) / 65536$ and $c^{3j} = (-b_1^j + 6b_2^j - 21b_3^j + 71b_4^j + 229b_5^j - 37b_6^j + 13b_7^j - 3b_8^j + 32768) / 65536$ using the intermediate values b^1, b^2 and b^3 calculated for the eight closest sub-pixels (b_1^j to b_8^j) in the vertical direction, sub-pixels b^j being situated in the column comprising the ½ resolution and ¼ resolution sub-pixels c^{ij} being interpolated and disposed symmetrically about the ½ resolution sub-pixel c^{2j}. The asymmetries in the filter coefficients used to obtain values for sub-pixels c^{1j} and c^{3j} account for the fact that sub-pixels b_1^j to b_8^j are not symmetrically located with respect to ¼ resolution sub-pixels c^{1j} and c^{3j}. Once more, operator / denotes division with truncation. Before the interpolated values for sub-pixels c^{ij} are stored in the frame memory they are clipped to lie in the range [0, 255]. In an alternative embodiment of the invention, ½ resolution and ¼ resolution sub-pixels c^{ij}

are calculated using in an analogous manner using intermediate values b^1, b^2 and b^3 in the horizontal direction.

3. Values for ⅛ resolution sub-pixels labelled d are calculated using linear interpolation from the values of their closest neighbouring image pixel, ½ resolution or ¼ resolution sub-pixels in the horizontal or vertical direction. For example, upper leftmost ⅛ resolution sub-pixel d is calculated according to $d = (A + b^1 + 1) / 2$. As before, operator / indicates division with truncation.

4. Values for ⅛ resolution sub-pixels labelled e and f are calculated using linear interpolation from the values of image pixels, ½ resolution or ¼ resolution sub-pixels in the diagonal direction. For example, referring to Figure 20, upper leftmost pixel ⅛ resolution sub-pixel e is calculated according to $e = (b^1 + b^1 + 1) / 2$. The diagonal direction to be used in the interpolation of each ⅛ resolution sub-pixel in a first preferred embodiment of the invention, hereinafter referred to as 'preferred method 1', is indicated in Figure 21(a). Values for ⅛ resolution sub-pixels labelled g are calculated according to $g = (A + 3c^{22} + 3) / 4$. As always, operator / denotes division with truncation. In an alternative embodiment of the invention, hereinafter referred to as 'preferred method 2', computational complexity is further reduced by interpolating ⅛ resolution sub-pixels f using linear interpolation from ½ resolution sub-pixels b^2, that is, according to the relationship $f = (3b^2 + b^2 + 2) / 4$. The b^2 sub-pixel which is closer to f is multiplied by 3. The diagonal interpolation scheme used in this alternative embodiment of the invention is depicted in Figure 21(b). In further alternative embodiments, different diagonal interpolation schemes can be envisaged.

It should be noted that in all cases where an average involving pixel and / or sub-pixel values is used in the determination of ⅛ resolution sub-pixels, the average may be formed in any appropriate manner. The addition of 1 to the sum of values used in calculating such an average has the effect of causing any rounding or truncation operation subsequently applied to round or truncate the average in question to the next highest integer value. In alternative embodiments of the invention, the addition of 1 is not used.

As in the case of sub-pixel value interpolation to ¼ pixel resolution previously described, memory requirements in the encoder can be reduced by pre-calculating only a part of the sub-pixel values to be interpolated. In the case of sub-pixel value interpolation to ⅛ pixel resolution, it is advantageous to calculate all ½ resolution and ¼ resolution sub-pixels before-hand and to compute values for ⅛ resolution sub-pixels in an on-demand fashion, only when they are required. When this approach is taken, both the interpolation method according to TML5 and that according to the invention require 16 times the original picture memory to store the ½ resolution and ¼ resolution sub-pixel values. However, if the direct interpolation method according to TML6 is used in the same way, intermediate values for the ½ resolution and ¼ pixel resolution sub-pixels must be stored. These intermediate values are represented with 32-bit precision and this results in a memory requirement 64 times that for the original, non-interpolated image.

In the following, the complexity of the sub-pixel value interpolation method according to the invention, when applied in a video decoder to calculate values for sub-pixels at up to ⅛ pixel resolution, is compared with that of the interpolation schemes used in TML5 and TML6. As in the equivalent analysis for ¼ pixel resolution sub-pixel value interpolation described above, it is assumed that in each method the interpolation of any sub-pixel value is performed using only the minimum number of steps required to obtain a

correctly interpolated value. It is also assumed that each method is implemented in a block based manner, such that intermediate values common for all the sub-pixels to be interpolated in a particular N x M block are calculated only once.

Table 2 summarizes complexities of the three interpolation methods. Complexity is measured in terms of the number of 8-tap filter and linear interpolation operations performed in each method. The table presents the number of operations required to interpolate each of the 63 ⅛ resolution sub-pixels within one 4 x 4 block of original image pixels, each sub-pixel location being identified with a corresponding number, as illustrated in Figure 22. In Figure 22, location 1 is the location of an original image pixel and locations 2 to 64 are sub-pixel locations. When computing the average number of operations, it has been assumed that the probability of a motion vector pointing to each sub-pixel position is the same. The average complexity is thus the average of the 63 sums calculated for each sub-pixel location and the single full-pixel location.

	TML5		TML6		Preferred Method 1		Preferred Method 2	
Location	linea r.	8-tap	linea r.	8-tap	linera .	8-tap	linear .	8-tap
1	0	0	0	0	0	0	0	0
3,5,7,17,33,49	0	16	0	16	0	16	0	16
19,21,23,35,37,39, 51,53,55	0	60	0	60	0	60	0	60
2,8,9,57	16	16	0	16	16	16	16	16
4,6,25,41	16	32	0	16	16	32	16	32
10,16,58,64	32	76	0	60	16	32	16	32
11,13,15,59,61,63	16	60	0	60	16	60	16	60
18,24,34,40,50,56	16	76	0	60	16	60	16	60
12,14,60,62	32	120	0	60	16	32	16	32
26,32,42,48	32	108	0	60	16	32	16	32

Patent Owner's Exhibit 2003, p. 222
Amazon et al v. Nokia
IPR2024-01139

20,22,36,38,52,54	16	120	0	60	16	76	16	76
27,29,31,43,45,47	16	76	0	60	16	76	16	76
28,30,44,46	32	152	0	60	16	60	16	60
Average	**64**	**290.25**	**0**	**197.75**	**48**	**214.75**	**48**	**192.75**

Table 2: Complexity of ⅛ resolution sub-pixel interpolation in TML5, TML6 and the method according to the invention. (Results shown separately for Preferred Method 1 and Preferred Method 2).

As can be seen from Table 2, the number of 8-tap filtering operations performed according to preferred methods 1 and 2 are, respectively, 26% and 34% lower than the number of 8-tap filtering operation performed in the sub-pixel value interpolation method of TML5. The number of linear operations is 25% lower, in both preferred method 1 and preferred method 2, compared with TML5, but this improvement is of lesser importance compared to the reduction in 8-tap filtering operations. It can further be seen that the direct interpolation method used in TML6 has a complexity comparable that of both preferred methods 1 and 2 when used to interpolate values for ⅛ resolution sub-pixels.

In view of the foregoing description it will be evident to a person skilled in the art that various modifications may be made within the scope of the invention. While a number of preferred embodiments of the invention have been described in detail, it should be apparent that many modifications and variations thereto are possible, all of which fall within the true spirit and scope of the invention.

CLAIMS

1. A method of interpolation in video coding in which an image comprising pixels arranged in rows and columns and represented by values having a specified dynamic range, the pixels in the rows residing at unit horizontal locations and the pixels in the columns residing at unit vertical locations, is interpolated to generate values for sub-pixels at fractional horizontal and vertical locations, the fractional horizontal and vertical locations being defined according to $1/2^x$, where x is a positive integer having a maximum value N, the method comprising:

a) when values for sub-pixels at $1/2^{N-1}$ unit horizontal and unit vertical locations, and unit horizontal and $1/2^{N-1}$ unit vertical locations are required, interpolating such values directly using weighted sums of pixels residing at unit horizontal and unit vertical locations;

b) when values for sub-pixels at $1/2^{N-1}$ unit horizontal and $1/2^{N-1}$ unit vertical locations are required, interpolating such values directly using a choice of a first weighted sum of values for sub-pixels residing at $1/2^{N-1}$ unit horizontal and unit vertical locations and a second weighted sum of values for sub-pixels residing at unit horizontal and $1/2^{N-1}$ unit vertical locations, the first and second weighted sums of values being calculated according to step (a); and

c) when a value for a sub-pixel situated at a $1/2^N$ unit horizontal and $1/2^N$ unit vertical location is required, interpolating such a value by taking a weighted average of the value of a first sub-pixel or pixel situated at a $1/2^{N-m}$ unit horizontal and $1/2^{N-n}$ unit vertical location and the value of a second sub-pixel or pixel located at a $1/2^{N-p}$ unit horizontal and $1/2^{N-q}$ unit vertical location, variables m, n, p and q taking integer values in the range 1 to N such that the first and second sub-pixels or pixels are located diagonally with respect to the sub-pixel at $1/2^N$ unit horizontal and $1/2^N$ vertical location.

2. A method according to claim 1 wherein a first and a second weight are used in the weighted average referred to in (c), the relative magnitudes of the weights being inversely proportional to the (straight line diagonal)

proximity of the first and the second sub-pixel or pixel to the sub-pixel at $1/2^N$ unit horizontal and $1/2^N$ vertical location.

3. A method according to claim 2, wherein in a situation where the first and the second sub-pixel or pixel are symmetrically located with respect to (equidistant from) the sub-pixel at $1/2^N$ unit horizontal and $1/2^N$ vertical location, the first and second weights have equal values.

4. A method according to claim 1 in which the first weighted sum of values for sub-pixels residing at $1/2^{N-1}$ unit horizontal and unit vertical locations in step b) is used when a sub-pixel at $1/2^{N-1}$ unit horizontal and $1/2^N$ unit vertical location is required.

5. A method according to claim 1 in which the second weighted sum of values for sub-pixels residing at unit horizontal and $1/2^{N-1}$ unit vertical locations in step b) is used when a sub-pixel at $1/2^N$ unit horizontal and $1/2^{N-1}$ unit vertical location is required.

6. A method according to claim 1 in which, when values for sub-pixels at $1/2^N$ unit horizontal and unit vertical locations, and $1/2^N$ horizontal and $1/2^{N-1}$ vertical locations are required, interpolating such values by taking the average of the values of a first pixel or sub-pixel located at a vertical location corresponding to that of the sub-pixel being calculated and unit horizontal location and a second pixel or sub-pixel located at a vertical location corresponding to that of the sub-pixel being calculated and $1/2^{N-1}$ unit horizontal location.

7. A method according to claim 1 in which, when values for sub-pixels at unit horizontal and $1/2^N$ unit vertical locations, and $1/2^{N-1}$ unit horizontal and $1/2^N$ unit vertical locations are required, interpolating such values by taking the average of the values of a first pixel or sub-pixel located at a horizontal location corresponding to that of the sub-pixel being calculated and unit

vertical location and a second pixel or sub-pixel located at a horizontal location corresponding to that of the sub-pixel being calculated and $1/2^{N-1}$ unit vertical location.

8. A method according to claim 1 in which values for sub-pixels at $1/2^N$ unit horizontal and $1/2^N$ unit vertical locations are interpolated by taking the average of values of a pixel located at a unit horizontal and unit vertical location, and a sub-pixel located at a $1/2^{N-1}$ unit horizontal and $1/2^{N-1}$ unit vertical location.

9. A method according to claim 1 in which values for sub-pixels at $1/2^N$ unit horizontal and $1/2^N$ unit vertical locations are interpolated by taking the average of values of a sub-pixel located at a $1/2^{N-1}$ unit horizontal and unit vertical location, and a sub-pixel located at a unit horizontal and $1/2^{N-1}$ unit vertical location.

10. A method according to claim 1 in which values for half of the sub-pixels at $1/2^N$ unit horizontal and $1/2^N$ unit vertical locations are interpolated by taking the average of a first pair of values of a sub-pixel located at a $1/2^{N-1}$ unit horizontal and unit vertical location, and a sub-pixel located at a unit horizontal and $1/2^{N-1}$ unit vertical location and values for the other half of the sub-pixels at $1/2^N$ unit horizontal and $1/2^N$ unit vertical locations are interpolated by taking the average of a second pair of values of a pixel located at a unit horizontal and unit vertical location, and a sub-pixel located at a $1/2^{N-1}$ unit horizontal and $1/2^{N-1}$ unit vertical location.

11. A method according to claim 10 in which values for sub-pixels at $1/2^N$ unit horizontal and $1/2^N$ unit vertical locations are alternately interpolated for one such sub-pixel by taking the average of a first pair of values of a sub-pixel located at a $1/2^{N-1}$ unit horizontal and unit vertical location, and a sub-pixel located at a unit horizontal and $1/2^{N-1}$ unit vertical location and values and for a neighbouring such sub-pixel by taking the average of a second

pair of values of a pixel located at a unit horizontal and unit vertical location, and a sub-pixel located at a $1/2^{N-1}$ unit horizontal and $1/2^{N-1}$ unit vertical location.

12. A method according to claim 11 in which the sub-pixels at $1/2^N$ unit horizontal and $1/2^N$ unit vertical locations are alternately interpolated in a horizontal direction.

13. A method according to claim 11 in which the sub-pixels at $1/2^N$ unit horizontal and $1/2^N$ unit vertical locations are alternately interpolated in a horizontal direction.

14. A method according to claim 1 in which when values for some sub-pixels at $1/2^N$ unit horizontal and $1/2^N$ unit vertical locations are required, such values are interpolated by taking the average of a plurality of nearest neighbouring pixels.

15. A method according to claim 1 in which N equals an integer selected from a list consisting of the values 2, 3, and 4.

16. A method according to claim 1 in which in at least one of step a) and step b) interpolating sub-pixel values directly using weighted sums involves the calculation of an intermediate value for the sub-pixel values having a dynamic range greater than the specified dynamic range.

17. A method according to claim 14 in which the intermediate value for a sub-pixel having $1/2^{N-1}$ sub-pixel resolution is used the calculation of a sub-pixel value having $1/2^N$ sub-pixel resolution.

18. A method of interpolation in video coding in which an image comprising pixels arranged in rows and columns and represented by values having a specified dynamic range, the pixels in the rows residing at unit horizontal

Patent Owner's Exhibit 2003, p. 227
Amazon et al v. Nokia
IPR2024-01139

locations and the pixels in the columns residing at unit vertical locations, is interpolated to generate values for sub-pixels at fractional horizontal and vertical locations, the method comprising:

a) when values for sub-pixels at half unit horizontal and unit vertical locations, and unit horizontal and half unit vertical locations are required, interpolating such values directly using weighted sums of pixels residing at unit horizontal and unit vertical locations;

b) when values for sub-pixels at half unit horizontal and half unit vertical locations are required, interpolating such values directly using a weighted sum of values for sub-pixels residing at half unit horizontal and unit vertical locations calculated according to step (a); and

c) when values for sub-pixels at quarter unit horizontal and quarter unit vertical locations are required, interpolating such values by taking the average of at least one pair of a first pair of values of a sub-pixel located at a half unit horizontal and unit vertical location, and a sub-pixel located at a unit horizontal and half unit vertical location and a second pair of values of a pixel located at a unit horizontal and unit vertical location, and a sub-pixel located at a half unit horizontal and half unit vertical location.

19. A method of interpolation in video coding in which an image comprising pixels arranged in rows and columns and represented by values having a specified dynamic range, the pixels in the rows residing at unit horizontal locations and the pixels in the columns residing at unit vertical locations, is interpolated to generate values for sub-pixels at fractional horizontal and vertical locations, the fractional horizontal and vertical locations being defined according to $1/2^x$ where x is a positive integer having a maximum value N, the method comprising:

a) when values for sub-pixels at $1/2^{N-1}$ unit horizontal and unit vertical locations, and unit horizontal and $1/2^{N-1}$ unit vertical locations are required, interpolating such values directly using weighted sums of pixels residing at unit horizontal and unit vertical locations;

b) when a value for a sub-pixel at a sub-pixel horizontal and sub-pixel vertical location is required, interpolating such a value directly using a choice of a first weighted sum of values for sub-pixels located at a vertical location corresponding to that of the sub-pixel being calculated and a second weighted sum of values for sub-pixels located at a horizontal location corresponding to that of the sub-pixel being calculated.

20. A method according to claim 1 in which the sub-pixels used in the first weighted sum are sub-pixels residing at $1/2^{N-1}$ unit horizontal and unit vertical locations and the first weighted sum is used to interpolate a value for a sub-pixel at $1/2^{N-1}$ unit horizontal and $1/2^{N}$ unit vertical location.

21. A method according to claim 1 in which the sub-pixels used in the second weighted sum are sub-pixels residing at unit horizontal and $1/2^{N-1}$ unit vertical locations and the second weighted sum is used to interpolate a value for a sub-pixel at $1/2^{N}$ unit horizontal and $1/2^{N-1}$ unit vertical location.

22. A method according to claim 1 in which when values for sub-pixels at $1/2^{N}$ unit horizontal and $1/2^{N}$ unit vertical locations are required, they are interpolated by taking the average of at least one pair of a first pair of values of a sub-pixel located at a $1/2^{N-1}$ unit horizontal and unit vertical location, and a sub-pixel located at a unit horizontal and $1/2^{N-1}$ unit vertical location and a second pair of values of a pixel located at a unit horizontal and unit vertical location, and a sub-pixel located at a $1/2^{N-1}$ unit horizontal and $1/2^{N-1}$ unit vertical location.

23. A video coder for coding an image comprising pixels arranged in rows and columns and represented by values having a specified dynamic range, the pixels in the rows residing at unit horizontal locations and the pixels in the columns residing at unit vertical locations, the video coder comprising an interpolator adapted to generate values for sub-pixels at fractional horizontal and vertical locations, the fractional horizontal and vertical

locations being defined according to 1/2x, where x is a positive integer having a maximum value N, the interpolator being adapted to:

a) interpolate values for sub-pixels at $1/2^{N-1}$ unit horizontal and unit vertical locations, and unit horizontal and $1/2^{N-1}$ unit vertical locations directly using weighted sums of pixels residing at unit horizontal and unit vertical locations;

b) interpolate values for sub-pixels at $1/2^{N-1}$ unit horizontal and $1/2^{N-1}$ unit vertical locations directly using a choice of a first weighted sum of values for sub-pixels residing at $1/2^{N-1}$ unit horizontal and unit vertical locations and a second weighted sum of values for sub-pixels residing at unit horizontal and $1/2^{N-1}$ unit vertical locations, the first and second weighted sums of values being calculated according to step (a); and

c) interpolate a value for a sub-pixel situated at a $1/2^N$ unit horizontal and $1/2^N$ unit vertical location by taking a weighted average of the value of a first sub-pixel or pixel situated at a $1/2^{N-m}$ unit horizontal and $1/2^{N-n}$ unit vertical location and the value of a second sub-pixel or pixel located at a $1/2^{N-p}$ unit horizontal and $1/2^{N-q}$ unit vertical location, variables m, n, p and q taking integer values in the range 1 to N such that the first and second sub-pixels or pixels are located diagonally with respect to the sub-pixel at $1/2^N$ unit horizontal and $1/2^N$ vertical location.

24. A video coder according to claim 23, comprising a video encoder.

25. A video encoder according to claim 23, comprising a video decoder.

26. A codec comprising the video encoder of claim 24 and the video decoder of claim 25.

27. A communications terminal comprising a video coder for coding an image comprising pixels arranged in rows and columns and represented by values having a specified dynamic range, the pixels in the rows residing at unit horizontal locations and the pixels in the columns residing at unit

vertical locations, the video coder comprising an interpolator adapted to generate values for sub-pixels at fractional horizontal and vertical locations, the fractional horizontal and vertical locations being defined according to $1/2^x$, where x is a positive integer having a maximum value N, the interpolator being adapted to:

a) interpolate values for sub-pixels at $1/2^{N-1}$ unit horizontal and unit vertical locations, and unit horizontal and $1/2^{N-1}$ unit vertical locations directly using weighted sums of pixels residing at unit horizontal and unit vertical locations;

b) interpolate values for sub-pixels at $1/2^{N-1}$ unit horizontal and $1/2^{N-1}$ unit vertical locations directly using a choice of a first weighted sum of values for sub-pixels residing at $1/2^{N-1}$ unit horizontal and unit vertical locations and a second weighted sum of values for sub-pixels residing at unit horizontal and $1/2^{N-1}$ unit vertical locations, the first and second weighted sums of values being calculated according to step (a); and

c) interpolate a value for a sub-pixel situated at a $1/2^N$ unit horizontal and $1/2^N$ unit vertical location by taking a weighted average of the value of a first sub-pixel or pixel situated at a $1/2^{N-m}$ unit horizontal and $1/2^{N-n}$ unit vertical location and the value of a second sub-pixel or pixel located at a $1/2^{N-p}$ unit horizontal and $1/2^{N-q}$ unit vertical location, variables m, n, p and q taking integer values in the range 1 to N such that the first and second sub-pixels or pixels are located diagonally with respect to the sub-pixel at $1/2^N$ unit horizontal and $1/2^N$ vertical location.

28. A communications terminal according to claim 27 comprising a video encoder.

29. A communications terminal according to claim 27 comprising a video decoder.

30. A communications terminal according to claim 27 having a video codec comprising a video encoder and a video decoder.

31. A telecommunications system comprising a communications terminal and a network, the telecommunications network and the communications terminal being connected by a communications link over which coded video can be transmitted, the communications terminal comprising a video coder for coding for coding an image comprising pixels arranged in rows and columns and represented by values having a specified dynamic range, the pixels in the rows residing at unit horizontal locations and the pixels in the columns residing at unit vertical locations, the video coder comprising an interpolator adapted to generate values for sub-pixels at fractional horizontal and vertical locations, the fractional horizontal and vertical locations being defined according to $1/2^x$, where x is a positive integer having a maximum value N, the interpolator being adapted to:

a) interpolate values for sub-pixels at $1/2^{N-1}$ unit horizontal and unit vertical locations, and unit horizontal and $1/2^{N-1}$ unit vertical locations directly using weighted sums of pixels residing at unit horizontal and unit vertical locations;

b) interpolate values for sub-pixels at $1/2^{N-1}$ unit horizontal and $1/2^{N-1}$ unit vertical locations directly using a choice of a first weighted sum of values for sub-pixels residing at $1/2^{N-1}$ unit horizontal and unit vertical locations and a second weighted sum of values for sub-pixels residing at unit horizontal and $1/2^{N-1}$ unit vertical locations, the first and second weighted sums of values being calculated according to step (a); and

c) interpolate a value for a sub-pixel situated at a $1/2^N$ unit horizontal and $1/2^N$ unit vertical location by taking a weighted average of the value of a first sub-pixel or pixel situated at a $1/2^{N-m}$ unit horizontal and $1/2^{N-n}$ unit vertical location and the value of a second sub-pixel or pixel located at a $1/2^{N-p}$ unit horizontal and $1/2^{N-q}$ unit vertical location, variables m, n, p and q taking integer values in the range 1 to N such that the first and second sub-pixels or pixels are located diagonally with respect to the sub-pixel at $1/2^N$ unit horizontal and $1/2^N$ vertical location.

32. A telecommunications system according to claim 31 which is a mobile telecommunications system comprising a mobile communications terminal and a wireless network, the connection between the mobile communications terminal and the wireless network being formed by a radio link.

33. A telecommunications system according to claim 31 in which the network enables the communications terminal to communicate with other communications terminals connected to the network over communications links between the other communications terminals and the network.

34. A telecommunications system comprising a communications terminal and a network, the telecommunications network and the communications terminal being connected by a communications link over which coded video can be transmitted, the network comprising a video coder for coding for coding an image comprising pixels arranged in rows and columns and represented by values having a specified dynamic range, the pixels in the rows residing at unit horizontal locations and the pixels in the columns residing at unit vertical locations, the video coder comprising an interpolator adapted to generate values for sub-pixels at fractional horizontal and vertical locations, the fractional horizontal and vertical locations being defined according to $1/2^x$, where x is a positive integer having a maximum value N, the interpolator being adapted to:

a) interpolate values for sub-pixels at $1/2^{N-1}$ unit horizontal and unit vertical locations, and unit horizontal and $1/2^{N-1}$ unit vertical locations directly using weighted sums of pixels residing at unit horizontal and unit vertical locations;

b) interpolate values for sub-pixels at $1/2^{N-1}$ unit horizontal and $1/2^{N-1}$ unit vertical locations directly using a choice of a first weighted sum of values for sub-pixels residing at $1/2^{N-1}$ unit horizontal and unit vertical locations and a second weighted sum of values for sub-pixels residing at unit horizontal and $1/2^{N-1}$ unit vertical locations, the first and second weighted sums of values being calculated according to step (a); and

c) interpolate a value for a sub-pixel situated at a $1/2^N$ unit horizontal and $1/2^N$ unit vertical location by taking a weighted average of the value of a first sub-pixel or pixel situated at a $1/2^{N-m}$ unit horizontal and $1/2^{N-n}$ unit vertical location and the value of a second sub-pixel or pixel located at a $1/2^{N-p}$ unit horizontal and $1/2^{N-q}$ unit vertical location, variables m, n, p and q taking integer values in the range 1 to N such that the first and second sub-pixels or pixels are located diagonally with respect to the sub-pixel at $1/2^N$ unit horizontal and $1/2^N$ vertical location.

35. A video coder for coding an image comprising pixels arranged in rows and columns and represented by values having a specified dynamic range, the pixels in the rows residing at unit horizontal locations and the pixels in the columns residing at unit vertical locations, the coder comprising an interpolator adapted to generate values for sub-pixels at fractional horizontal and vertical locations, the resolution of the sub-pixels being determined by a positive integer N, the interpolator being adapted to:

a) interpolate values for sub-pixels at $1/2^{N-1}$ unit horizontal and unit vertical locations, and unit horizontal and $1/2^{N-1}$ unit vertical locations directly using weighted sums of pixels residing at unit horizontal and unit vertical locations;

b) interpolate a value for a sub-pixel at a sub-pixel horizontal and sub-pixel vertical location is required directly using a choice of a first weighted sum of values for sub-pixels located at a vertical location corresponding to that of the sub-pixel being calculated and a second weighted sum of values for sub-pixels located at a horizontal location corresponding to that of the sub-pixel being calculated.

36. A video coder according to claim 35 in which the interpolator is further adapted to form the first weighted sum using the values of sub-pixels residing at $1/2^{N-1}$ unit horizontal and unit vertical locations and to use the first weighted sum to interpolate a value for a sub-pixel at $1/2^{N-1}$ unit horizontal and $1/2^N$ unit vertical location.

37. A video coder according to claim 35 in which the interpolator is further adapted to form the second weighted sum using the values of sub-pixels residing at unit horizontal and $1/2^{N-1}$ unit vertical locations and to use the second weighted sum to interpolate a value for a sub-pixel at $1/2^{N}$ unit horizontal and $1/2^{N-1}$ unit vertical location.

38. A method according to claim 35 in which the interpolator is further adapted to interpolate values for sub-pixels at $1/2^{N}$ unit horizontal and $1/2^{N}$ unit vertical locations by taking the average of at least one pair of a first pair of values of a sub-pixel located at a $1/2^{N-1}$ unit horizontal and unit vertical location, and a sub-pixel located at a unit horizontal and $1/2^{N-1}$ unit vertical location and a second pair of values of a pixel located at a unit horizontal and unit vertical location, and a sub-pixel located at a $1/2^{N-1}$ unit horizontal and $1/2^{N-1}$ unit vertical location.

39. A video coder according to claim 35, comprising a video encoder.

40. A video encoder according to claim 35, comprising a video decoder.

41. A codec comprising the video encoder of claim 39 and the video decoder of claim 40.

42. A communications terminal comprising a video coder for coding an image comprising pixels arranged in rows and columns and represented by values having a specified dynamic range, the pixels in the rows residing at unit horizontal locations and the pixels in the columns residing at unit vertical locations, the coder comprising an interpolator adapted to generate values for sub-pixels at fractional horizontal and vertical locations, the resolution of the sub-pixels being determined by a positive integer N, the interpolator being adapted to:

a) interpolate values for sub-pixels at $1/2^{N-1}$ unit horizontal and unit vertical locations, and unit horizontal and $1/2^{N-1}$ unit vertical locations directly using weighted sums of pixels residing at unit horizontal and unit vertical locations;

b) interpolate a value for a sub-pixel at a sub-pixel horizontal and sub-pixel vertical location is required directly using a choice of a first weighted sum of values for sub-pixels located at a vertical location corresponding to that of the sub-pixel being calculated and a second weighted sum of values for sub-pixels located at a horizontal location corresponding to that of the sub-pixel being calculated.

43. A communications terminal according to claim 42 comprising a video encoder.

44. A communications terminal according to claim 42 comprising a video decoder.

45. A communications terminal according to claim 42 having a video codec comprising a video encoder and a video decoder.

46. A telecommunications system comprising a communications terminal and a network, the telecommunications network and the communications terminal being connected by a communications link over which coded video can be transmitted, the communications terminal comprising a video coder for coding an image comprising pixels arranged in rows and columns and represented by values having a specified dynamic range, the pixels in the rows residing at unit horizontal locations and the pixels in the columns residing at unit vertical locations, the coder comprising an interpolator adapted to generate values for sub-pixels at fractional horizontal and vertical locations, the resolution of the sub-pixels being determined by a positive integer N, the interpolator being adapted to:

a) interpolate values for sub-pixels at $1/2^{N-1}$ unit horizontal and unit vertical locations, and unit horizontal and $1/2^{N-1}$ unit vertical locations directly using weighted sums of pixels residing at unit horizontal and unit vertical locations;

b) interpolate a value for a sub-pixel at a sub-pixel horizontal and sub-pixel vertical location is required directly using a choice of a first weighted sum of values for sub-pixels located at a vertical location corresponding to that of the sub-pixel being calculated and a second weighted sum of values for sub-pixels located at a horizontal location corresponding to that of the sub-pixel being calculated.

47. A telecommunications system according to claim 46 which is a mobile telecommunications system comprising a mobile communications terminal and a wireless network, the connection between the mobile communications terminal and the wireless network being formed by a radio link.

48. A telecommunications system according to claim 46 in which the network enables the communications terminal to communicate with other communications terminals connected to the network over communications links between the other communications terminals and the network.

49. A telecommunications system comprising a communications terminal and a network, the telecommunications network and the communications terminal being connected by a communications link over which coded video can be transmitted, the network comprising a video coder for coding for coding an image comprising pixels arranged in rows and columns and represented by values having a specified dynamic range, the pixels in the rows residing at unit horizontal locations and the pixels in the columns residing at unit vertical locations, the coder comprising an interpolator adapted to generate values for sub-pixels at fractional horizontal and vertical locations, the resolution of the sub-pixels being determined by a positive integer N, the interpolator being adapted to:

Patent Owner's Exhibit 2003, p. 237
Amazon et al v. Nokia
IPR2024-01139

a) interpolate values for sub-pixels at $1/2^{N-1}$ unit horizontal and unit vertical locations, and unit horizontal and $1/2^{N-1}$ unit vertical locations directly using weighted sums of pixels residing at unit horizontal and unit vertical locations;

b) interpolate a value for a sub-pixel at a sub-pixel horizontal and sub-pixel vertical location is required directly using a choice of a first weighted sum of values for sub-pixels located at a vertical location corresponding to that of the sub-pixel being calculated and a second weighted sum of values for sub-pixels located at a horizontal location corresponding to that of the sub-pixel being calculated.

ABSTRACT

A method of interpolation in video coding in which an image comprising pixels arranged in rows and columns and represented by values having a specified dynamic range, the pixels in the rows residing at unit horizontal locations and the pixels in the columns residing at unit vertical locations, is interpolated to generate values for sub-pixels at fractional horizontal and vertical locations, the method comprising:

a) when values for sub-pixels at half unit horizontal and unit vertical locations, and unit horizontal and half unit vertical locations are required, interpolating such values directly using weighted sums of pixels residing at unit horizontal and unit vertical locations;

b) when values for sub-pixels at half unit horizontal and half unit vertical locations are required, interpolating such values directly using a weighted sum of values for sub-pixels residing at half unit horizontal and unit vertical locations calculated according to step (a); and

c) when values for sub-pixels at quarter unit horizontal and quarter unit vertical locations are required, interpolating such values by taking the average of at least one pair of a first pair of values of a sub-pixel located at a half unit horizontal and unit vertical location, and a sub-pixel located at a unit horizontal and half unit vertical location and a second pair of values of a pixel located at a unit horizontal and unit vertical location, and a sub-pixel located at a half unit horizontal and half unit vertical location.

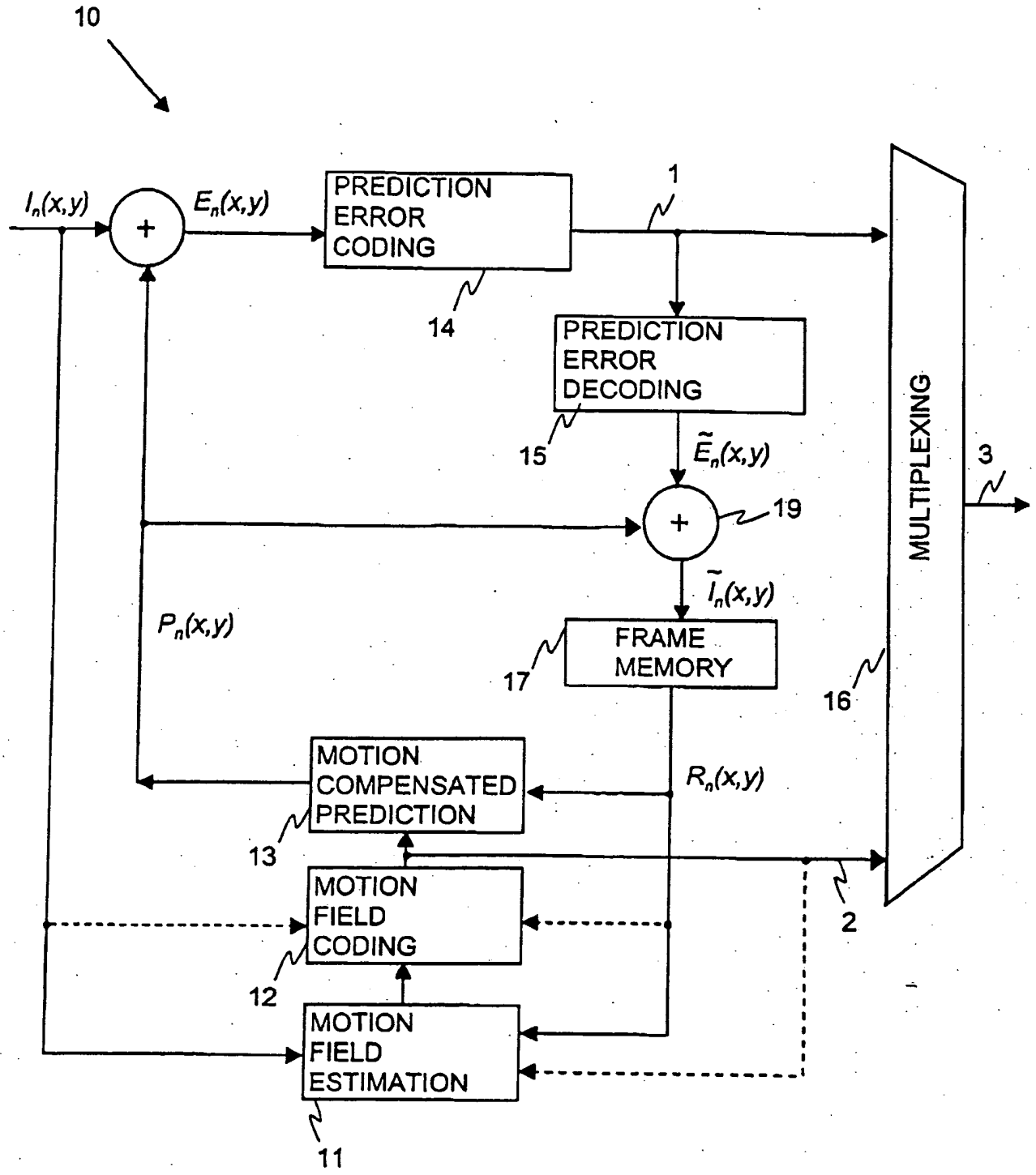

PRIOR ART

Fig. 1

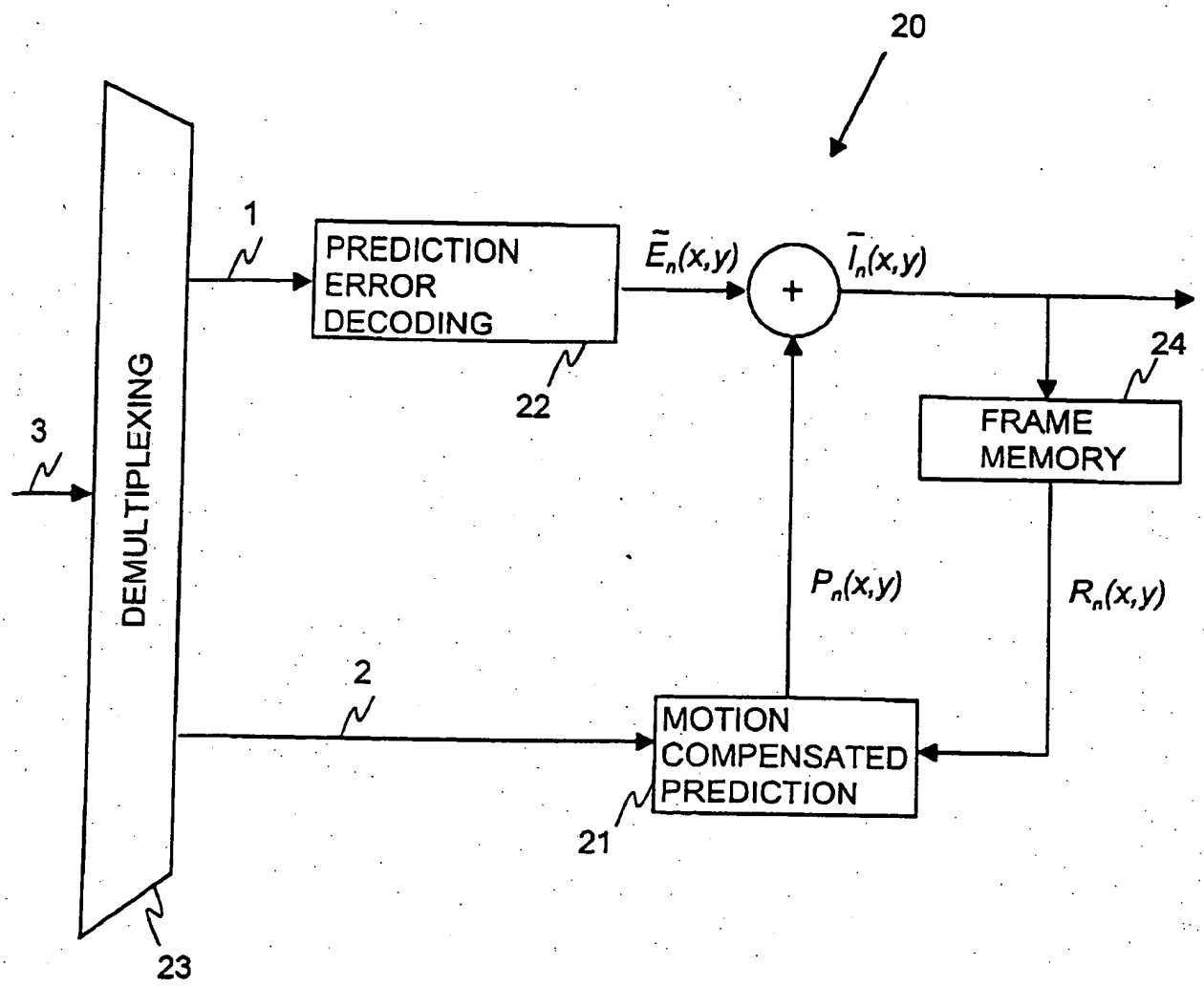

PRIOR ART

Fig. 2

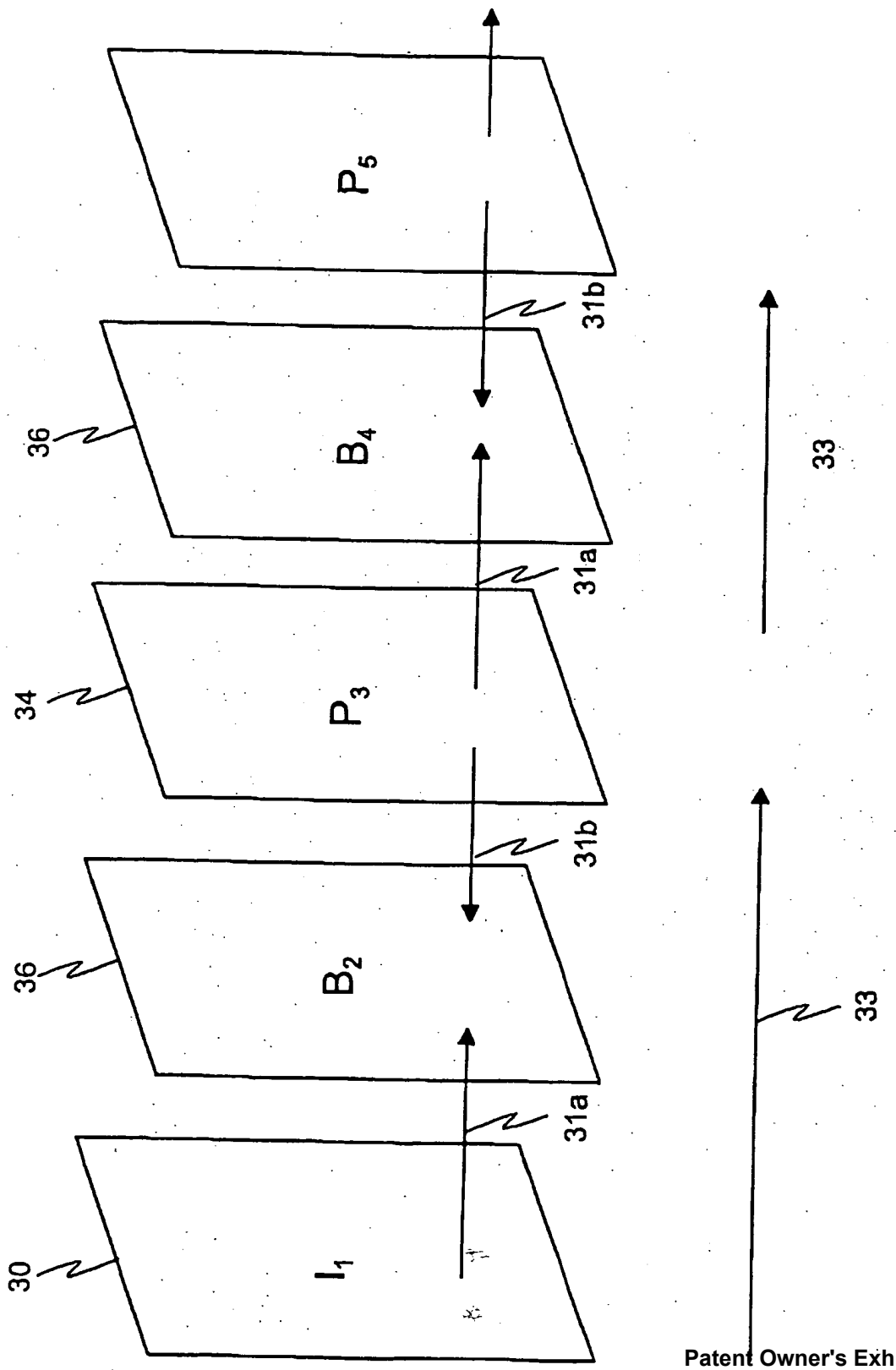

Fig. 3

Patent Owner's Exhibit 2003, p. 242
Amazon et al v. Nokia
IPR2024-01139

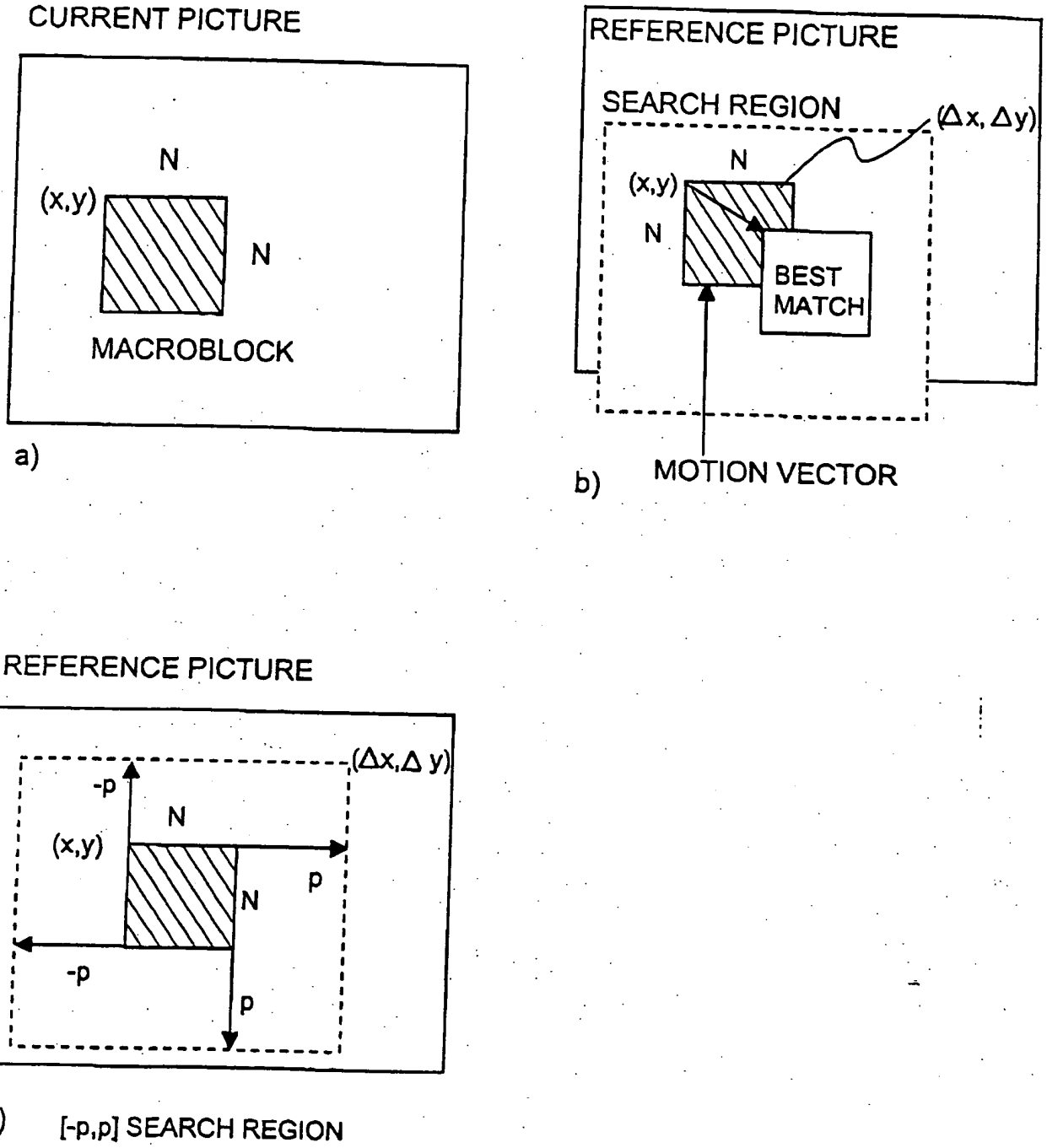
CURRENT PICTURE
N
(x,y)
N
MACROBLOCK
a)
REFERENCE PICTURE
SEARCH REGION
(Δx, Δy)
N
(x,y)
N
BEST MATCH
b)
MOTION VECTOR
REFERENCE PICTURE
(Δx,Δ y)
-p
N
(x,y)
p
N
-p
p
c)
[-p,p] SEARCH REGION

Fig. 4

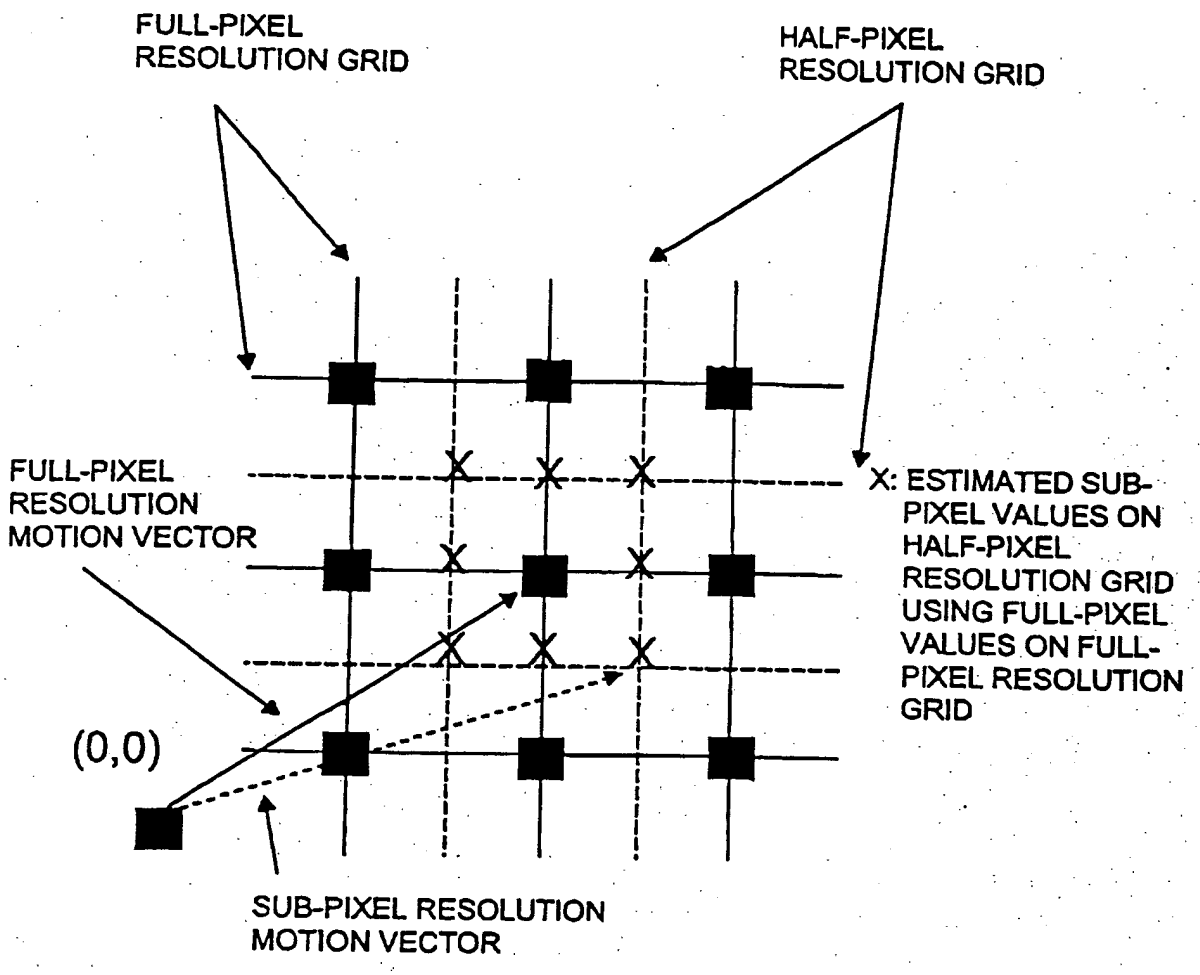
FULL-PIXEL
RESOLUTION GRID
HALF-PIXEL
RESOLUTION GRID
FULL-PIXEL
RESOLUTION
MOTION VECTOR
X: ESTIMATED SUB-PIXEL VALUES ON HALF-PIXEL RESOLUTION GRID USING FULL-PIXEL VALUES ON FULL-PIXEL RESOLUTION GRID
(0,0)
SUB-PIXEL RESOLUTION
MOTION VECTOR

Fig. 5

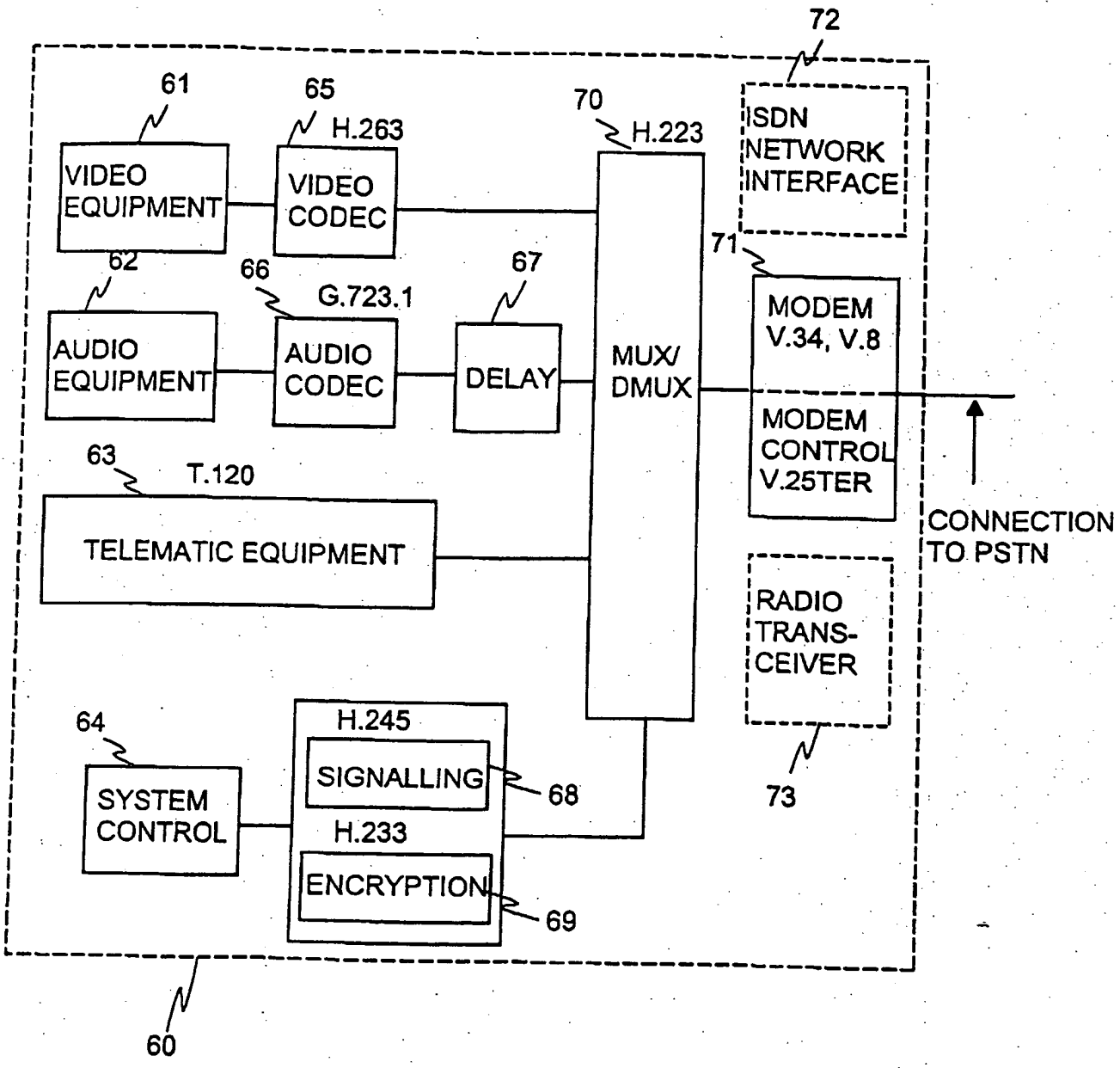
72
61
65
H.263
70
H.223
ISDN NETWORK INTERFACE
VIDEO EQUIPMENT
VIDEO CODEC
71
62
66
G.723.1
67
MODEM V.34, V.8
AUDIO EQUIPMENT
AUDIO CODEC
DELAY
MUX/ DMUX
MODEM CONTROL V.25TER
63
T.120
CONNECTION TO PSTN
TELEMATIC EQUIPMENT
RADIO TRANS-CEIVER
64
H.245
SIGNALLING
68
73
SYSTEM CONTROL
H.233
ENCRYPTION
69
60

Fig. 6

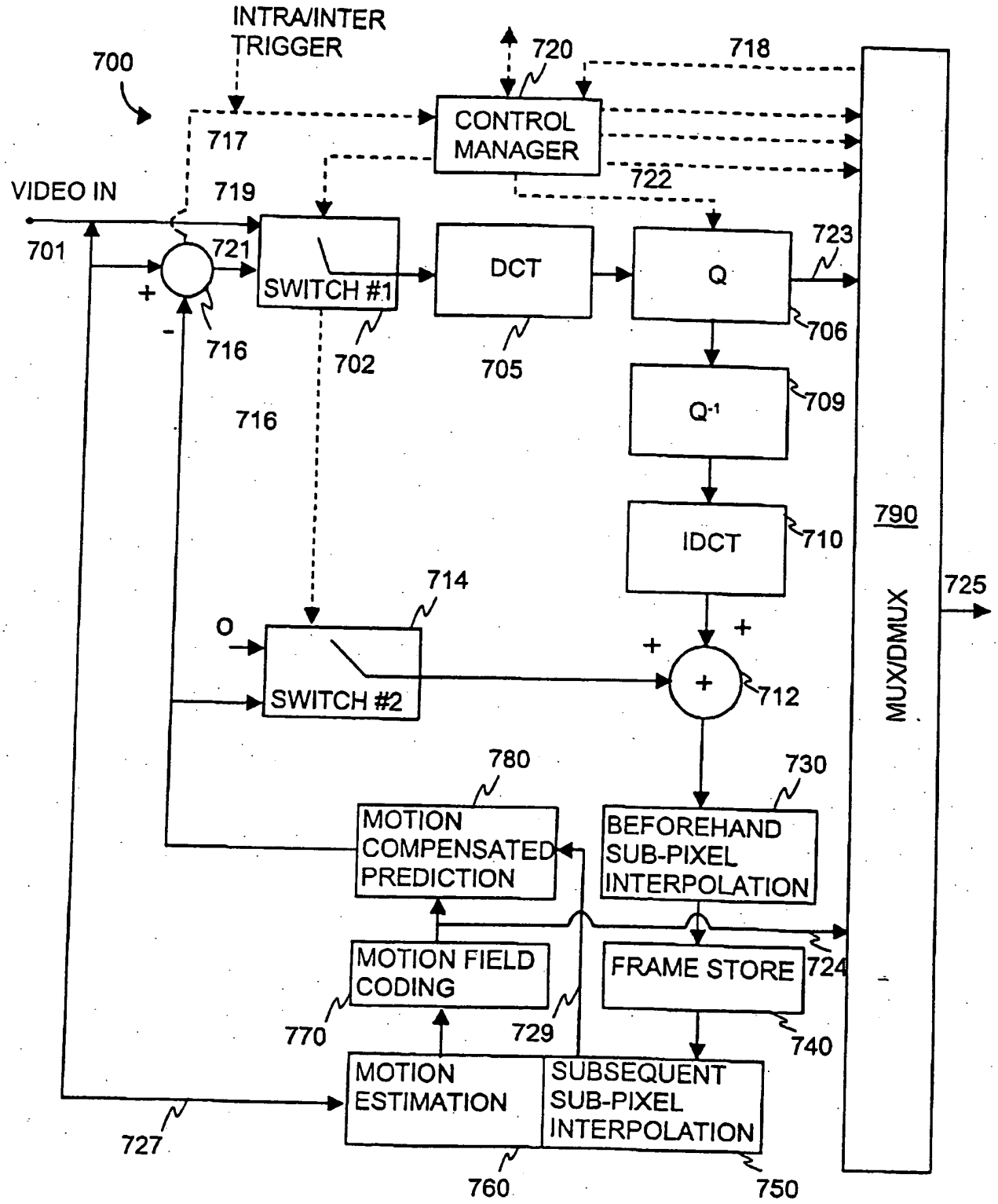
INTRA/INTER
TRIGGER
700
720
718
CONTROL
MANAGER
717
722
VIDEO IN
719
701
721
SWITCH #1
DCT
Q
723
+
-
716
702
705
706
716
Q-1
709
IDCT
710
790
714
725
O
+
+
SWITCH #2
712
MUX/DMUX
780
730
MOTION
COMPENSATED
PREDICTION
BEFOREHAND
SUB-PIXEL
INTERPOLATION
MOTION FIELD
CODING
FRAME STORE
724
770
729
740
MOTION
ESTIMATION
SUBSEQUENT
SUB-PIXEL
INTERPOLATION
727
760
750

Fig. 7

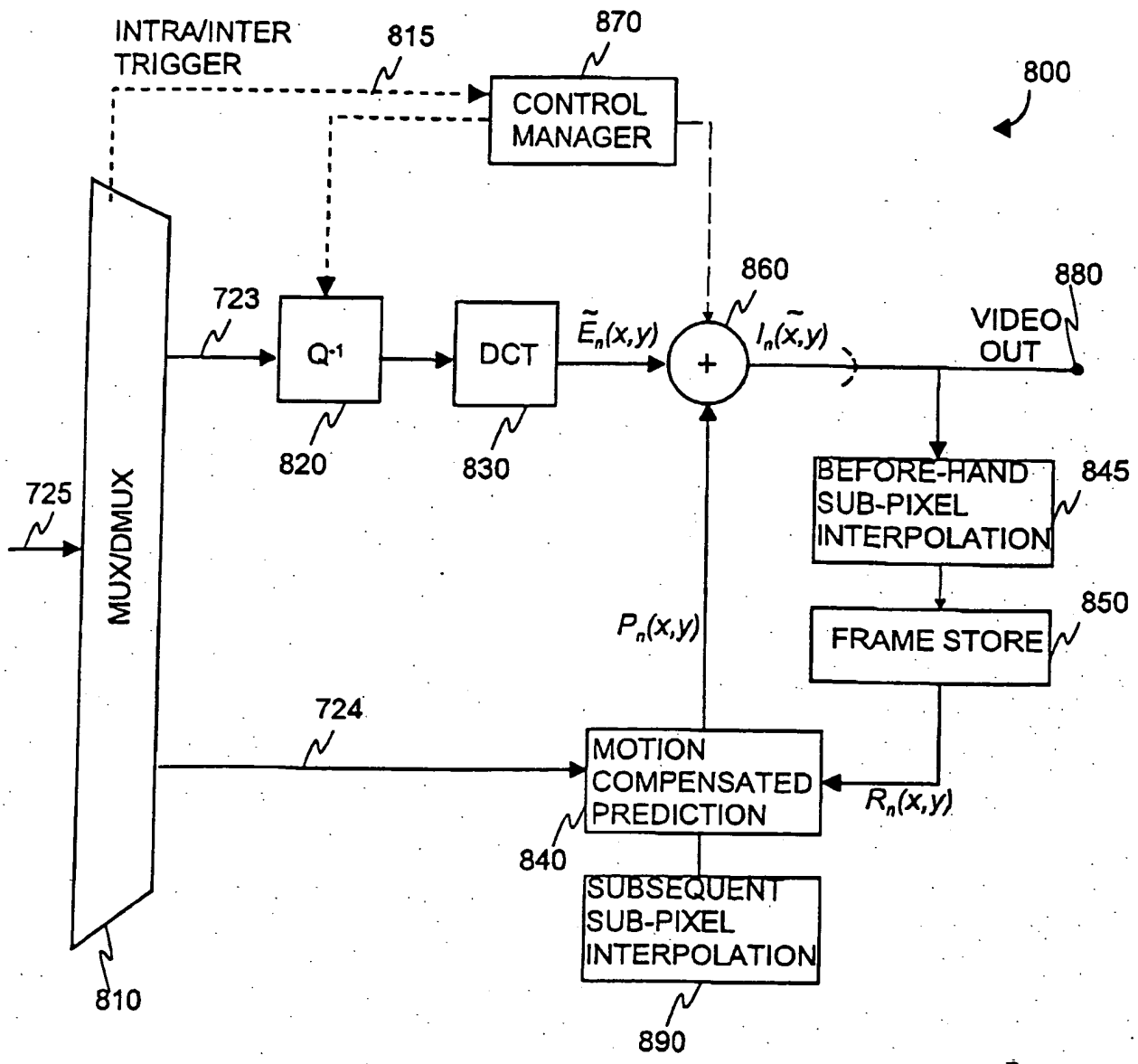
INTRA/INTER
TRIGGER
815
870
CONTROL
MANAGER
800
723
Q-1
DCT
$\tilde{E}_n(x,y)$
860
$I_n(\tilde{x},y)$
880
VIDEO
OUT
820
830
725
MUX/DMUX
BEFORE-HAND
SUB-PIXEL
INTERPOLATION
845
850
FRAME STORE
$P_n(x,y)$
724
MOTION
COMPENSATED
PREDICTION
$R_n(x,y)$
840
SUBSEQUENT
SUB-PIXEL
INTERPOLATION
810
890

Fig. 8

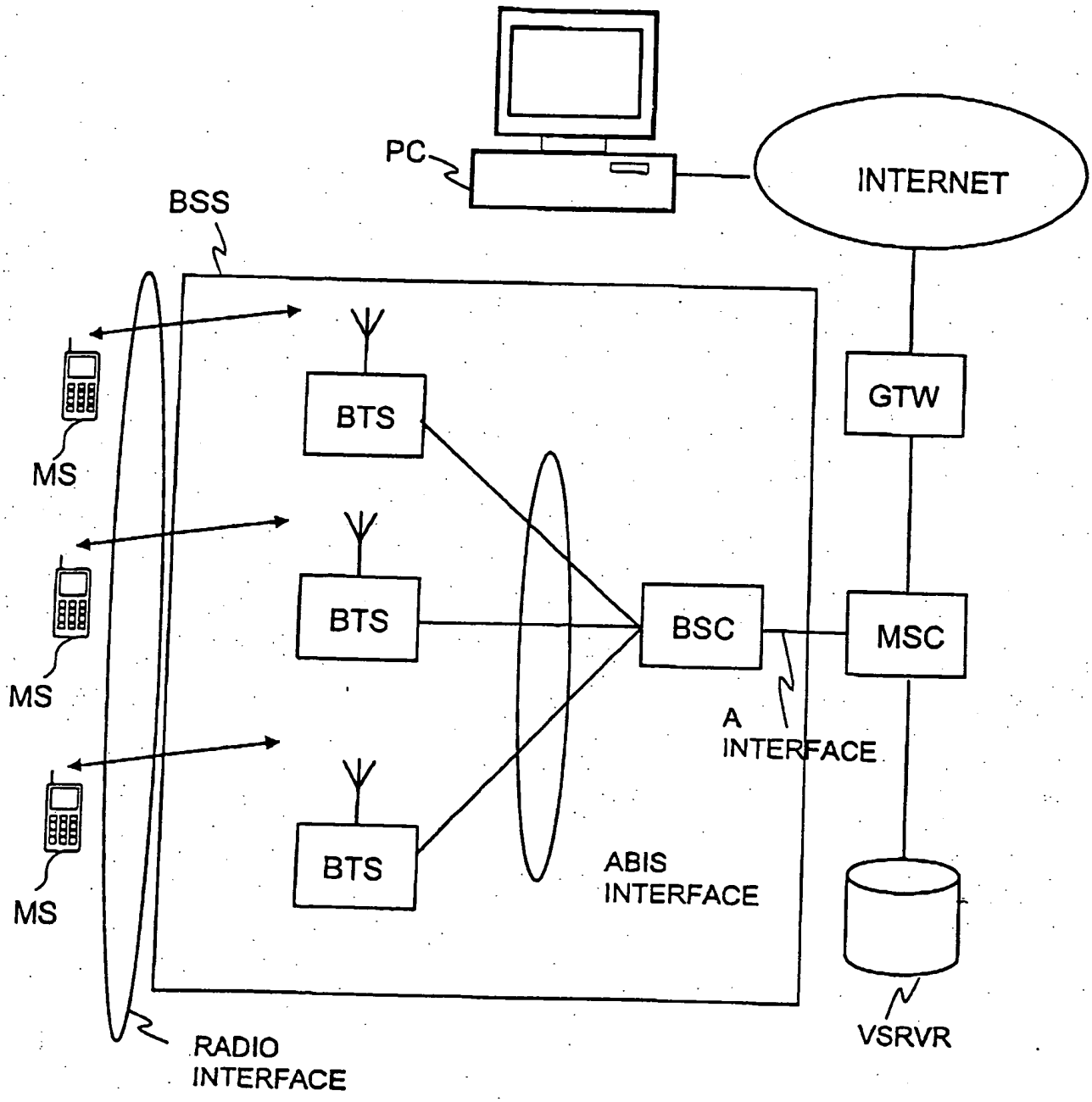
PC
INTERNET
BSS
GTW
BTS
MS
BTS
BSC
MSC
MS
A
INTERFACE
BTS
ABIS
INTERFACE
MS
VSRVR
RADIO
INTERFACE

Fig. 11

A	d	b	d	A
e	e	e	e	
c	d	c	d	
e	e	e	f	
A				A

Fig. 12(a)

A_1 A_2 A_3 d b d A_4 A_5 A_6

e e e e

c d c d

e e e f

A A

Figure12(b)

Patent Owner's Exhibit 2003, p. 250
Amazon et al v. Nokia
IPR2024-01139

A_1 b_1

A_2 b_2

A_3 d b_3 d A
e e e e
c d c d
e e e f
A_4 b_4 A

A_5 b_5

A_6 b_6

Figure 12(c)

A	d	b	d	A
e	g	e	g	
c	d	c	d	
e	g	e	f	
A				A

Fig. 13(a)

A_1 A_2 A_3 d b d A_4 A_5 A_6

e g e g

c d c d

e g e f

A A

Figure13(b)

Patent Owner's Exhibit 2003, p. 253
Amazon et al v. Nokia
IPR2024-01139

A_1 b_1

A_2 b_2

A_3 d b_3 d A
e g e g
c d c d
e g e f
A_4 b_4 A

A_5 b_5

A_6 b_6

Figure 13(c)

Patent Owner's Exhibit 2003, p. 254
Amazon et al v. Nokia
IPR2024-01139

A	d	b	d	A
e	h	f	h	
b	g	c	g	
e	h	f	i	
A				A

Fig. 14(a)

A_1 A_2 A_3 d **b** d A_4 A_5 A_6

e h f h

b g **c** g

e h f i

A **A**

Figure14(b)

Patent Owner's Exhibit 2003, p. 256
Amazon et al v. Nokia
IPR2024-01139

A_1

A_2

A_3	d	**b**	d	**A**
e	h	f	h	
b	g	**c**	g	
e	h	f	i	
A_4				**A**

A_5

A_6

Figure 14(a)

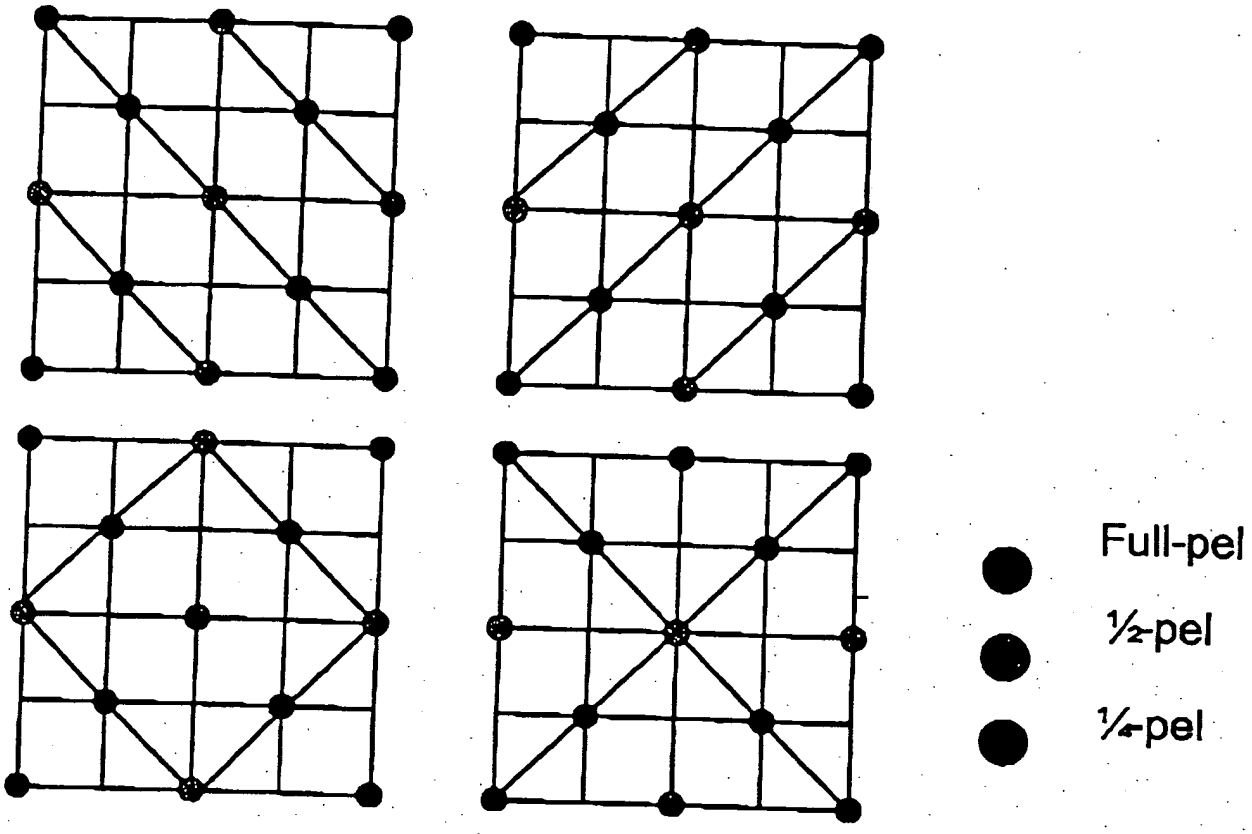

Fig. 15

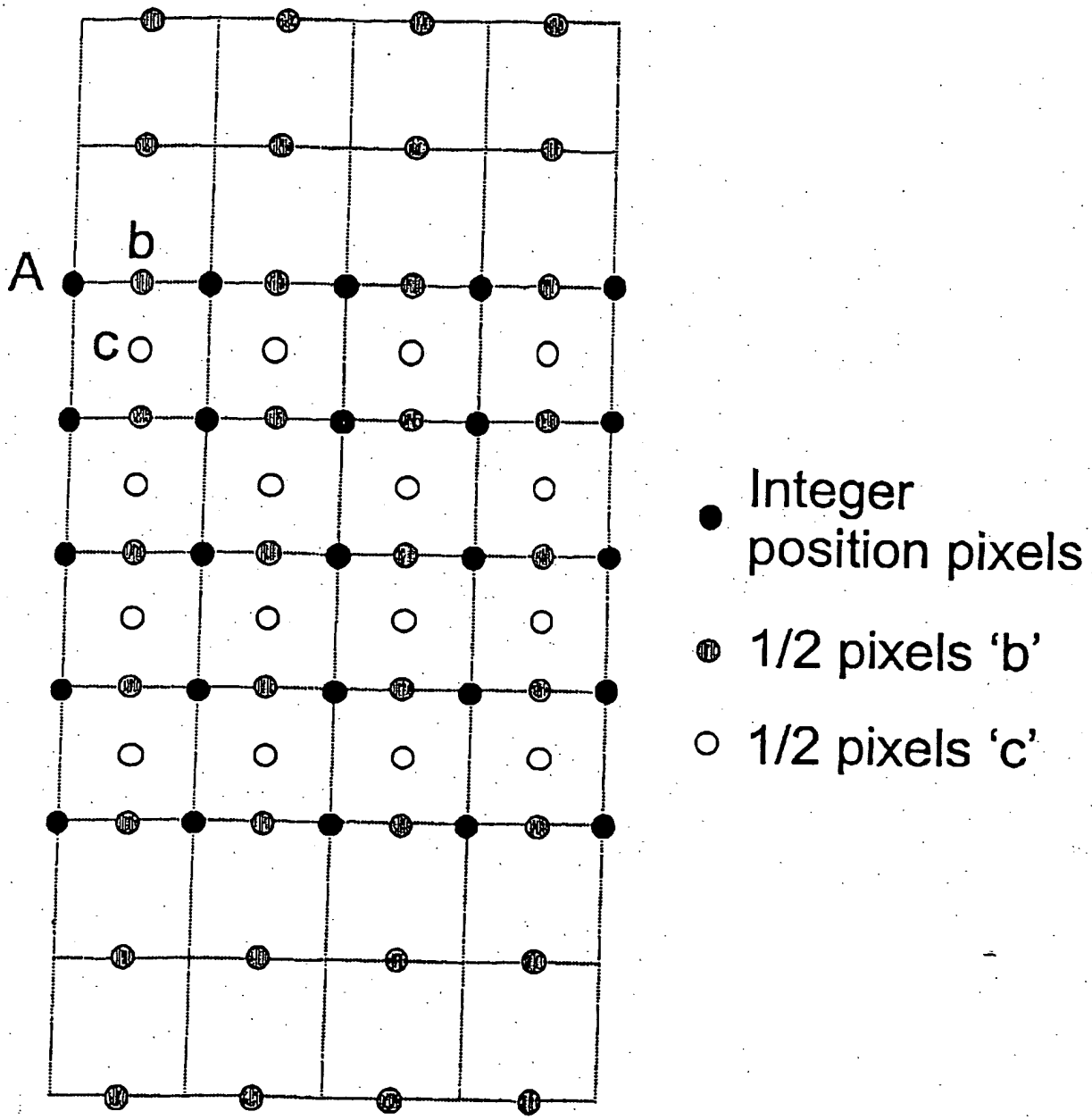

Fig. 16

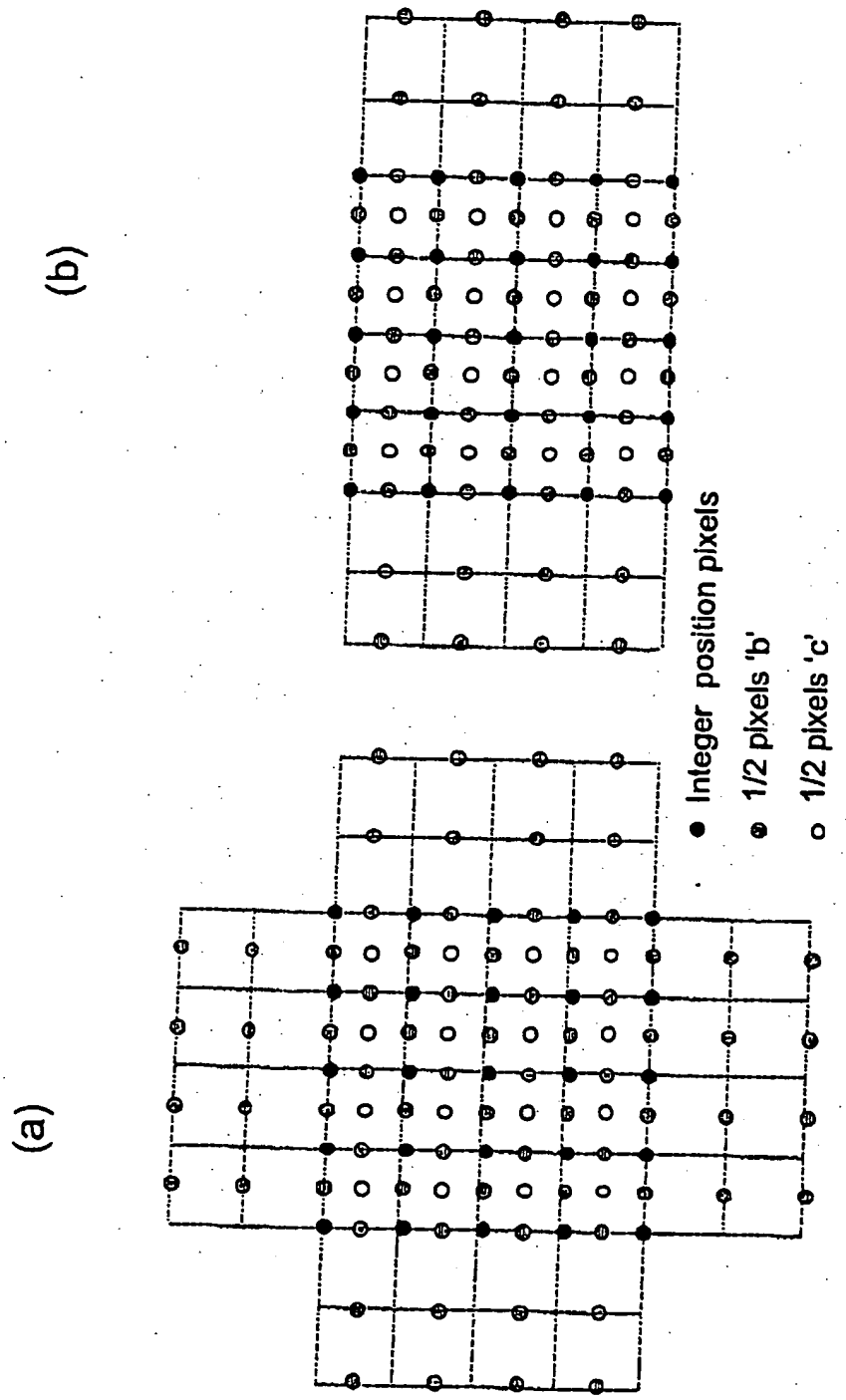

Fig. 17

(a)

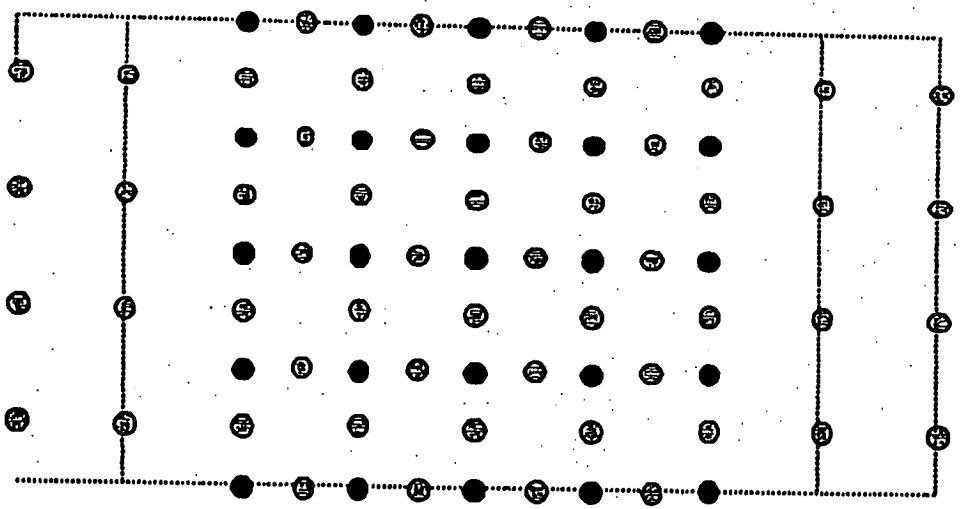

(b)

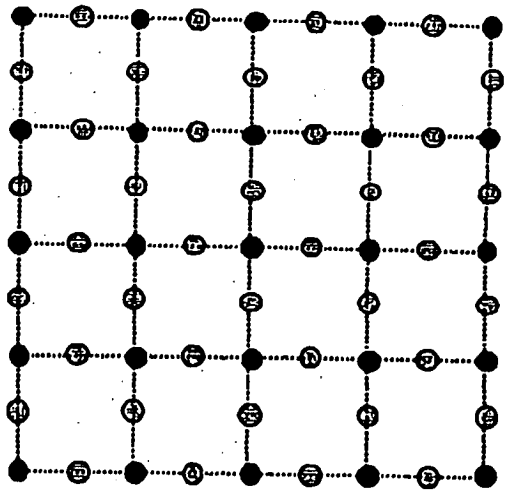

● Integer position pixels

1/2 pixels 'b'

Fig. 18

Patent Owner's Exhibit 2003, p. 261
Amazon et al v. Nokia
IPR2024-01139

1	2	3	4
5	6	7	8
9	10	11	12
13	14	15	16

Fig. 19

A	d	$\mathbf{b^1}$	d	$\mathbf{b^2}$	d	$\mathbf{b^3}$	d	**A**
d	e	d	f	d	f	d	e	
$\mathbf{b^1}$	d	$\mathbf{c^{11}}$	d	$\mathbf{c^{12}}$	d	$\mathbf{c^{13}}$	d	
d	f	d	g	d	g	d	f	
$\mathbf{b^2}$	d	$\mathbf{c^{21}}$	d	$\mathbf{c^{22}}$	d	$\mathbf{c^{23}}$	d	
d	f	d	g	d	g	d	e	
$\mathbf{b^3}$	d	$\mathbf{c^{31}}$	d	$\mathbf{c^{32}}$	d	$\mathbf{c^{33}}$	d	
d	e	d	f	d	f	d	e	
A								

Figure 20

Patent Owner's Exhibit 2003, p. 263
Amazon et al v. Nokia
IPR2024-01139

Fig. 21

1	2	3	4	5	6	7	8
9	10	11	12	13	14	15	16
17	18	19	20	21	22	23	24
25	26	27	28	29	30	31	32
33	34	35	36	37	38	39	40
41	42	43	44	45	46	47	48
49	50	51	52	53	54	55	56
57	58	59	60	61	62	63	64

Fig. 22

Attorney's Docket No. _____ **PATENT**

COMBINED DECLARATION AND POWER OF ATTORNEY

(ORIGINAL, DESIGN, NATIONAL STAGE OF PCT, SUPPLEMENTAL, DIVISIONAL, CONTINUATION OR C-I-P)

As a below named inventor, I hereby declare that:

TYPE OF DECLARATION

COPY

This declaration is of the following type: (check one applicable item below)

- ☒ original
- ☐ design
- ☐ supplemental

NOTE: If the declaration is for an International Application being filed as a divisional, continuation or continuation-in-part application, do not check next item; check appropriate one of last three items.

- ☐ national stage of PCT

NOTE: if one of the following 3 items apply, then complete and also attach ADDED PAGES FOR DIVISIONAL, CONTINUATION OR C-I-P.

- ☐ divisional
- ☐ continuation
- ☐ continuation-in-part (C-I-P)

INVENTORSHIP IDENTIFICATION

WARNING: If the inventors are each not the inventors of all the claims, an explanation of the facts, including the ownership of all the claims at the time the last claimed invention was made, should be submitted.

My residence, post office address and citizenship are as stated below next to my name.
I believe I am the original, first and sole inventor (if only one name is listed below) or an original, first and joint inventor (if plural names are listed below) of the subject matter which is claimed and for which a patent is sought on the invention entitled:

TITLE OF INVENTION

Method for sub-pixel value interpolation

SPECIFICATION IDENTIFICATION

the specification of which: (complete (a), (b) or (c))

(a) ☐ is attached hereto.
(b) ☒ was filed on 17 Sep. 2001 as ☒ Serial No. 09/954,608
or ☐ Express Mail No., as Serial No. not yet known _____
and was amended on _____(if applicable)

BEST AVAILABLE COPY

Patent Owner's Exhibit 2003, p. 266
Amazon et al v. Nokia
IPR2024-01139

NOTE: Amendments filed after the original papers are deposited with the PTO which contain new matter are not accorded a filing date by being referred to in the declaration. Accordingly, the amendments involved are those filed with the application papers or, in the case of a supplemental declaration, are those amendments claiming matter not encompassed in the original statement of invention or claims. See 37 CFR 1.67.

(c) ☐ was described and claimed in PCT International Application No. _____ filed on _____ and as amended under PCT Article 19 on _____(*if any*).

ACKNOWLEDGEMENT OF REVIEW OF PAPERS AND DUTY OF CANDOR

I hereby state that I have reviewed and understand the contents of the above identified specification, including the claims, as amended by any amendment referred to above.

I acknowledge the duty to disclose information

☒ which is material to patentability as defined in 37, Code of Federal Regulations, § 1.56

(also check the following items, if desired)

☒ and which is material to the examination of this application, namely, information where there is a substantial likelihood that a reasonable examiner would consider it important in deciding whether to allow the application to issue as a patent, and

☐ In compliance with this duty there is attached an information disclosure statement in accordance with 37 CFR 1.98.

PRIORITY CLAIM (35 U.S.C. § 119)

I hereby claim foreign priority benefits under Title 35, United States Code, § 119 of any foreign application(s) for patent or inventor's certificate or of any PCT International application(s) designating at least one country other than the United States of America listed below and have also identified below any foreign application(s) for patent or inventor's certificate or any PCT International application(s) designating at least one country other than the United States of America filed by me on the same subject matter having a filing date before that of the application(s) of which priority is claimed.

(complete (d) or (e))

(d) ☒ no such applications have been filed.

(e) ☐ such applications have been filed as follows.

NOTE: Where item (c) is entered above and the International Application which designated the U.S. itself claimed priority check item (e), enter the details below and make the priority claim.

A. PRIOR FOREIGN/PCT APPLICATION(S) FILED WITHIN 12 MONTHS (6 MONTHS FOR DESIGN) PRIOR TO THIS APPLICATION

AND ANY PRIORITY CLAIMS UNDER 35 U.S.C. § 119

COUNTRY (OR INDICATE IF PCT)	APPLICATION NUMBER	DATE OF FILING (day, **month**, year)	PRIORITY CLAIMED UNDER 37 USC 119
			☐ YES NO☐
			☐ YES NO☐
			☐ YES NO☐
			☐ YES NO☐
			☐ YES NO☐

ALL FOREIGN APPLICATION(S), IF ANY FILED MORE THAN 12 MONTHS (6) MONTHS FOR DESIGN PRIOR TO THIS U.S. APPLICATION

_____

_____

_____

NOTE: If the application filed more than 12 months from the filing date of this application is a PCT filing forming the basis for this application entering the United States as (1) the national stage, or (2) a continuation, divisional, or continuation-in-part, then also complete ADDED PAGES TO COMBINED DECLARATION AND POWER OF ATTORNEY FOR DIVISIONAL, CONTINUATION OR C-I-P APPLICATION for benefit of the prior U.S. or PCT application(s) under 35 U.S.C. § 120.

POWER OF ATTORNEY

I hereby appoint the following attorney(s) and/or agent(s) to prosecute this application and transact all business in the Patent and Trademark Office connected therewith. *(List name and registration number)*

Clarence A. Green (24,622)
Mark F. Harrington (31,686)
Janik Marcovici (42,841)

(check the following item, if applicable)

☐ Attached as part of this declaration and power of attorney is the authorization of the above named attorney(s) to accept and follow instructions from my representative(s).

SEND CORRESPONDENCE TO

Perman & Green
425 Post Road

DIRECT TELEPHONE CALLS TO:
(Name and telephone number)
Mark F. Harrington

Patent Owner's Exhibit 2003, p. 268
Amazon et al v. Nokia
IPR2024-01139

DECLARATION

I hereby declare that all statements made herein of my own knowledge are true and that all statements made on information and belief are believed to be true; and further that these statements were made with the knowledge that willful false statements and the like so made are punishable by fine or imprisonment, or both, under Section 1001 of Title 18 of the United States Code, and that such willful false statements may jeopardize the validity of the application or any patent issued thereon.

SIGNATURE(S)

NOTE: Carefully indicate the family (or last) name as it should appear on the filing receipt and all other documents.

Full name of sole or first inventor

Marta	____	Karczewicz
(GIVEN NAME)	(MIDDLE INITIAL OR NAME)	FAMILY (OR LAST NAME)

Inventor's signature _____
Date 02/10/2001 Country of Citizenship Poland
Residence Irving, Texas, U.S.A.
Post Office Address 1224 Hidden Ridge, #3097 Irving, TX 75038, U.S.A.

Full name of second joint inventor, if any

Antti	____	Hallapuro
(GIVEN NAME)	(MIDDLE INITIAL OR NAME)	FAMILY (OR LAST NAME)

Inventor's signature _____
Date _____ Country of Citizenship Finland
Residence Tampere, Finland
Post Office Address Insinöörinkatu 60 B 115, FIN-33720 Tampere, Finland

Patent Owner's Exhibit 2003, p. 269
Amazon et al v. Nokia
IPR2024-01139

Full name of third joint inventor, if any

_____ (GIVEN NAME) _____ (MIDDLE INITIAL OR NAME) _____ FAMILY (OR LAST NAME)

Inventor's signature _____
Date _____ Country of Citizenship _____
Residence _____
Post Office Address _____

CHECK PROPER BOX(ES) FOR ANY OF THE FOLLOWING ADDED PAGE(S) WHICH FORM A PART OF THIS DECLARATION

☐ Signature for fourth and subsequent joint inventors. *Number of pages added* _____

. . .

☐ Signature by administrator(trix), executor(trix) or legal representative for deceased or incapacitated inventor. *Number of pages added* _____

. . .

☐ Signature for inventor who refuses to sign or cannot be reached by person authorised under 37 CFR 1.47. *Number of pages added* _____

. . .

☐ Added page for signature by one joint inventor on behalf of deceased inventor(s) where legal representative cannot be appointed in time (37 CFR 1.47).

. . .

☐ Added pages to combined declaration and power of attorney for divisional, continuation, or continuation-in-part (C-I-P) application. *Number of pages added* _____

. . .

☐ Authorization of attorney(s) to accept and follow instructions from representative.

. . .

(If no further pages form a part of this Declaration, then end this Declaration with this page and check the following item:)

☒ This declaration ends with this page.

Patent Owner's Exhibit 2003, p. 270
Amazon et al v. Nokia
IPR2024-01139

Attorney's Docket No. _____ **PATENT**

COMBINED DECLARATION AND POWER OF ATTORNEY

(ORIGINAL, DESIGN, NATIONAL STAGE OF PCT, SUPPLEMENTAL, DIVISIONAL, CONTINUATION OR C-I-P)

As a below named inventor, I hereby declare that:

TYPE OF DECLARATION

This declaration is of the following type: (check one applicable item below)

- ☒ original
- ☐ design
- ☐ supplemental

NOTE: If the declaration is for an International Application being filed as a divisional, continuation or continuation-in-part application, do not check next item; check appropriate one of last three items.

- ☐ national stage of PCT

NOTE: if one of the following 3 items apply, then complete and also attach ADDED PAGES FOR DIVISIONAL, CONTINUATION OR C-I-P.

- ☐ divisional
- ☐ continuation
- ☐ continuation-in-part (C-I-P)

INVENTORSHIP IDENTIFICATION

WARNING: If the inventors are each not the inventors of all the claims, an explanation of the facts, including the ownership of all the claims at the time the last claimed invention was made, should be submitted.

My residence, post office address and citizenship are as stated below next to my name. I believe I am the original, first and sole inventor (if only one name is listed below) or an original, first and joint inventor (if plural names are listed below) of the subject matter which is claimed and for which a patent is sought on the invention entitled:

TITLE OF INVENTION

Method for sub-pixel value interpolation

SPECIFICATION IDENTIFICATION

the specification of which: (complete (a), (b) or (c))

(a) ☐ is attached hereto.
(b) ☒ was filed on 17 Sep. 2001 as ☒ Serial No. 09/954,608
or ☐ Express Mail No., as Serial No. not yet known _____
and was amended on _____(if applicable)

Patent Owner's Exhibit 2003, p. 271
Amazon et al v. Nokia
IPR2024-01139

NOTE: Amendments filed after the original papers are deposited with the PTO which contain new matter are not accorded a filing date by being referred to in the declaration. Accordingly, the amendments involved are those filed with the application papers or, in the case of a supplemental declaration, are those amendments claiming matter not encompassed in the original statement of invention or claims. See 37 CFR 1.67.

(c) ☐ was described and claimed in PCT International Application No. _____ filed on _____ and as amended under PCT Article 19 on _____(*if any*).

ACKNOWLEDGEMENT OF REVIEW OF PAPERS AND DUTY OF CANDOR

I hereby state that I have reviewed and understand the contents of the above identified specification, including the claims, as amended by any amendment referred to above.

I acknowledge the duty to disclose information

☒ which is material to patentability as defined in 37, Code of Federal Regulations, § 1.56

(also check the following items, if desired)

☒ and which is material to the examination of this application, namely, information where there is a substantial likelihood that a reasonable examiner would consider it important in deciding whether to allow the application to issue as a patent, and

☐ In compliance with this duty there is attached an information disclosure statement in accordance with 37 CFR 1.98.

PRIORITY CLAIM (35 U.S.C. § 119)

I hereby claim foreign priority benefits under Title 35, United States Code, § 119 of any foreign application(s) for patent or inventor's certificate or of any PCT International application(s) designating at least one country other than the United States of America listed below and have also identified below any foreign application(s) for patent or inventor's certificate or any PCT International application(s) designating at least one country other than the United States of America filed by me on the same subject matter having a filing date before that of the application(s) of which priority is claimed.

(complete (d) or (e))

(d) ☒ no such applications have been filed.

(e) ☐ such applications have been filed as follows.

NOTE: Where item (c) is entered above and the International Application which designated the U.S. itself claimed priority check item (e), enter the details below and make the priority claim.

Patent Owner's Exhibit 2003, p. 272
Amazon et al v. Nokia
IPR2024-01139

A. PRIOR FOREIGN/PCT APPLICATION(S) FILED WITHIN 12 MONTHS (6 MONTHS FOR DESIGN) PRIOR TO THIS APPLICATION AND ANY PRIORITY CLAIMS UNDER 35 U.S.C. § 119

COUNTRY (OR INDICATE IF PCT)	APPLICATION NUMBER	DATE OF FILING (day, **month**, year)	PRIORITY CLAIMED UNDER 37 USC 119
			☐ **YES** **NO**☐
			☐ **YES** **NO**☐
			☐ **YES** **NO**☐
			☐ **YES** **NO**☐
			☐ **YES** **NO**☐

ALL FOREIGN APPLICATION(S), IF ANY FILED MORE THAN 12 MONTHS (6) MONTHS FOR DESIGN PRIOR TO THIS U.S. APPLICATION

_____

_____

_____

NOTE: If the application filed more than 12 months from the filing date of this application is a PCT filing forming the basis for this application entering the United States as (1) the national stage, or (2) a continuation, divisional, or continuation-in-part, then also complete ADDED PAGES TO COMBINED DECLARATION AND POWER OF ATTORNEY FOR DIVISIONAL, CONTINUATION OR C-I-P APPLICATION for benefit of the prior U.S. or PCT application(s) under 35 U.S.C. § 120.

POWER OF ATTORNEY

I hereby appoint the following attorney(s) and/or agent(s) to prosecute this application and transact all business in the Patent and Trademark Office connected therewith. *(List name and registration number)*

Clarence A. Green (24,622)
Mark F. Harrington (31,686)
Janik Marcovici (42,841)

(check the following item, if applicable)

☐ Attached as part of this declaration and power of attorney is the authorization of the above named attorney(s) to accept and follow instructions from my representative(s).

Patent Owner's Exhibit 2003, p. 273
Amazon et al v. Nokia
IPR2024-01139

SEND CORRESPONDENCE TO

Perman & Green
425 Post Road
Fairfield, CT 06430-6232

DIRECT TELEPHONE CALLS TO:
(Name and telephone number)
Mark F. Harrington

(203) 259-1800

DECLARATION

I hereby declare that all statements made herein of my own knowledge are true and that all statements made on information and belief are believed to be true; and further that these statements were made with the knowledge that willful false statements and the like so made are punishable by fine or imprisonment, or both, under Section 1001 of Title 18 of the United States Code, and that such willful false statements may jeopardize the validity of the application or any patent issued thereon.

SIGNATURE(S)

NOTE: Carefully indicate the family (or last) name as it should appear on the filing receipt and all other documents.

Full name of sole or first inventor

Marta (GIVEN NAME) _____ (MIDDLE INITIAL OR NAME) Karczewicz FAMILY (OR LAST NAME)

Inventor's signature _____
Date _____ Country of Citizenship Poland
Residence Irving, Texas, U.S.A.
Post Office Address 1224 Hidden Ridge, #3097 Irving, TX 75038, U.S.A.

Full name of second joint inventor, if any

Antti (GIVEN NAME) Olli (MIDDLE INITIAL OR NAME) Hallapuro FAMILY (OR LAST NAME)

Inventor's signature Antti Hallapuro
Date 15.10.2001 Country of Citizenship Finland
Residence Tampere, Finland
Post Office Address Insinöörinkatu 60 B 115, FIN-33720 Tampere, Finland

Patent Owner's Exhibit 2003, p. 274
Amazon et al v. Nokia
IPR2024-01139

Full name of third joint inventor, if any

_____ (GIVEN NAME) _____ (MIDDLE INITIAL OR NAME) _____ FAMILY (OR LAST NAME)

Inventor's signature _____
Date _____ Country of Citizenship _____
Residence _____
Post Office Address _____

CHECK PROPER BOX(ES) FOR ANY OF THE FOLLOWING ADDED PAGE(S) WHICH FORM A PART OF THIS DECLARATION

☐ Signature for fourth and subsequent joint inventors. *Number of pages added* ____

. . .

☐ Signature by administrator(trix), executor(trix) or legal representative for deceased or incapacitated inventor. *Number of pages added* _____

. . .

☐ Signature for inventor who refuses to sign or cannot be reached by person authorised under 37 CFR 1.47. *Number of pages added* _____

. . .

☐ Added page for signature by one joint inventor on behalf of deceased inventor(s) where legal representative cannot be appointed in time (37 CFR 1.47).

. . .

☐ Added pages to combined declaration and power of attorney for divisional, continuation, or continuation-in-part (C-I-P) application. *Number of pages added* _____

. . .

☐ Authorization of attorney(s) to accept and follow instructions from representative.

. . .

(If no further pages form a part of this Declaration, then end this Declaration with this page and check the following item:)

☒ This declaration ends with this page.

Patent Owner's Exhibit 2003, p. 275
Amazon et al v. Nokia
IPR2024-01139

This Page is Inserted by IFW Indexing and Scanning Operations and is not part of the Official Record

BEST AVAILABLE IMAGES

Defective images within this document are accurate representations of the original documents submitted by the applicant.

Defects in the images include but are not limited to the items checked:

- ☐ BLACK BORDERS
- ☐ IMAGE CUT OFF AT TOP, BOTTOM OR SIDES
- ☐ FADED TEXT OR DRAWING
- ☐ BLURRED OR ILLEGIBLE TEXT OR DRAWING
- ☐ SKEWED/SLANTED IMAGES
- ☐ COLOR OR BLACK AND WHITE PHOTOGRAPHS
- ☐ GRAY SCALE DOCUMENTS
- ☐ LINES OR MARKS ON ORIGINAL DOCUMENT
- ☐ REFERENCE(S) OR EXHIBIT(S) SUBMITTED ARE POOR QUALITY
- ☐ OTHER: _____

IMAGES ARE BEST AVAILABLE COPY.
As rescanning these documents will not correct the image problems checked, please do not report these problems to the IFW Image Problem Mailbox.

PATENT APPLICATION SERIAL NO. _____

U.S. DEPARTMENT OF COMMERCE
PATENT AND TRADEMARK OFFICE
FEE RECORD SHEET

03/30/2005 HLE333 00000004 11090717

01 FC:1011	300.00	OP
02 FC:1081	250.00	OP
03 FC:1111	500.00	OP
04 FC:1311	200.00	OP

PTO-1556
(5/87)

*U.S. Government Printing Office: 2002 — 489-267/60033

BEST AVAILABLE COPY

PATENT APPLICATION FEE DETERMINATION RECORD
Effective December 8, 2004

11090717

CLAIMS AS FILED - PART I

	(Column 1)	(Column 2)
TOTAL CLAIMS	20	
FOR	NUMBER FILED	NUMBER EXTRA
TOTAL CHARGEABLE CLAIMS	20 minus 20=	* 0
INDEPENDENT CLAIMS	3 minus 3 =	* 0
MULTIPLE DEPENDENT CLAIM PRESENT		☐

* If the difference in column 1 is less than zero, enter "0" in column 2

SMALL ENTITY TYPE ☐		OR	OTHER THAN SMALL ENTITY	
RATE	FEE		RATE	FEE
BASIC FEE	150.00	OR	BASIC FEE	300.00
X$ 25=		OR	X$50=	
X100=		OR	X200=	
+180=		OR	+360=	
TOTAL		OR	TOTAL	300

CLAIMS AS AMENDED - PART II

AMENDMENT A

	(Column 1)		(Column 2)	(Column 3)
	CLAIMS REMAINING AFTER AMENDMENT		HIGHEST NUMBER PREVIOUSLY PAID FOR	PRESENT EXTRA
Total	*	Minus	**	=
Independent	*	Minus	***	=
FIRST PRESENTATION OF MULTIPLE DEPENDENT CLAIM				☐

SMALL ENTITY		OR	OTHER THAN SMALL ENTITY	
RATE	ADDI-TIONAL FEE		RATE	ADDI-TIONAL FEE
X$ 25=		OR	X$50=	
X100=		OR	X200=	
+180=		OR	+360=	
TOTAL ADDIT. FEE		OR	TOTAL ADDIT. FEE	

AMENDMENT B

	(Column 1)		(Column 2)	(Column 3)
	CLAIMS REMAINING AFTER AMENDMENT		HIGHEST NUMBER PREVIOUSLY PAID FOR	PRESENT EXTRA
Total	*	Minus	**	=
Independent	*	Minus	***	=
FIRST PRESENTATION OF MULTIPLE DEPENDENT CLAIM				☐

RATE	ADDI-TIONAL FEE		RATE	ADDI-TIONAL FEE
X$ 25=		OR	X$50=	
X100=		OR	X200=	
+180=		OR	+360=	
TOTAL ADDIT. FEE		OR	TOTAL ADDIT. FEE	

AMENDMENT C

	(Column 1)		(Column 2)	(Column 3)
	CLAIMS REMAINING AFTER AMENDMENT		HIGHEST NUMBER PREVIOUSLY PAID FOR	PRESENT EXTRA
Total	*	Minus	**	=
Independent	*	Minus	***	=
FIRST PRESENTATION OF MULTIPLE DEPENDENT CLAIM				☐

RATE	ADDI-TIONAL FEE		RATE	ADDI-TIONAL FEE
X$ 25=		OR	X$50=	
X100=		OR	X200=	
+180=		OR	+360=	
TOTAL ADDIT. FEE		OR	TOTAL ADDIT. FEE	

* If the entry in column 1 is less than the entry in column 2, write "0" in column 3.
** If the "Highest Number Previously Paid For" IN THIS SPACE is less than 20, enter "20."
***If the "Highest Number Previously Paid For" IN THIS SPACE is less than 3, enter "3."
The "Highest Number Previously Paid For" (Total or Independent) is the highest number found in the appropriate box in column 1.

Patent Owner's Exhibit 2003, p. 278
Amazon et al v. Nokia
IPR2024-01139

IN THE UNITED STATES PATENT AND TRADEMARK OFFICE

APPLICANT(s):	Karczewicz et al.		
SERIAL NO.:		ART UNIT:	
FILING DATE:	Herewith	EXAMINER:	
TITLE:	METHOD FOR SUB-PIXEL VALUE INTERPOLATION		
ATTORNEY DOCKET NO.:	442-010567-US (C01)		

Mail Stop Amendment
Commissioner of Patents
P.O. Box 1450
Alexandria, VA 22313-1450

PRELIMINARY AMENDMENT

I. INTRODUCTION

Please amend the Application as follows:

II. SPECIFICATION AMENDMENTS

On page 1, after the title, please insert:

--CROSS REFERENCE TO RELATED APPLICATIONS

This application is a continuation of, and claims priority to, co-pending U.S. Application Serial No. 09/954,608, filed on September 17, 2001, now allowed.--

Patent Owner's Exhibit 2003, p. 280
Amazon et al v. Nokia
IPR2024-01139

III. CLAIM AMENDMENTS

1. (Original) A method of interpolation in video coding in which an image comprising pixels arranged in rows and columns and represented by values having a specified dynamic range, the pixels in the rows residing at unit horizontal locations and the pixels in the columns residing at unit vertical locations, is interpolated to generate values for sub-pixels at fractional horizontal and vertical locations, the fractional horizontal and vertical locations being defined according to $1/2^x$, where x is a positive integer having a maximum value N, the method comprising:

a) when values for sub-pixels at $1/2^{N-1}$ unit horizontal and unit vertical locations, and unit horizontal and $1/2^{N-1}$ unit vertical locations are required, interpolating such values directly using weighted sums of pixels residing at unit horizontal and unit vertical locations;

b) when values for sub-pixels at $1/2^{N-1}$ unit horizontal and $1/2^{N-1}$ unit vertical locations are required, interpolating such values directly using a choice of a first weighted sum of values for sub-pixels residing at $1/2^{N-1}$ unit horizontal and unit vertical locations and a second weighted sum of values for sub-pixels residing at unit horizontal and $1/2^{N-1}$ unit vertical locations, the first and second weighted sums of values being calculated according to step (a); and

c) when a value for a sub-pixel situated at a $1/2^N$ unit horizontal and $1/2^N$ unit vertical location is required, interpolating such a value by taking a weighted average of the value of a first sub-pixel or pixel situated at a $1/2^{N-m}$

Patent Owner's Exhibit 2003, p. 281
Amazon et al v. Nokia
IPR2024-01139

unit horizontal and $1/2^{N-n}$ unit vertical location and the value of a second sub-pixel or pixel located at a $1/2^{N-p}$ unit horizontal and $1/2^{N-q}$ unit vertical location, variables m, n, p and q taking integer values in the range 1 to N such that the first and second sub-pixels or pixels are located diagonally with respect to the sub-pixel at $1/2^N$ unit horizontal and $1/2^N$ vertical location.

2. (Original) A method according to claim 1 wherein a first and a second weight are used in the weighted average referred to in (c), the relative magnitudes of the weights being inversely proportional to the (straight-line diagonal) proximity of the first and the second sub-pixel or pixel to the sub-pixel at $1/2^N$ unit horizontal and $1/2^N$ vertical location.

3. (Original) A method according to claim 2, wherein in a situation where the first and the second sub-pixel or pixel are symmetrically located with respect to (equidistant from) the sub-pixel at $1/2^N$ unit horizontal and $1/2^N$ vertical location, the first and second weights have equal values.

4. (Original) A method according to claim 1 in which the first weighted sum of values for sub-pixels residing at $1/2^{N-1}$ unit horizontal and unit vertical locations in step b) is used when a sub-pixel at $1/2^{N-1}$ unit horizontal and $1/2^N$ unit vertical location is required.

Patent Owner's Exhibit 2003, p. 282
Amazon et al v. Nokia
IPR2024-01139

5. (Original) A method according to claim 1 in which the second weighted sum of values for sub-pixels residing at unit horizontal and $1/2^{N-1}$ unit vertical locations in step b) is used when a sub-pixel at $1/2^{N}$ unit horizontal and $1/2^{N-1}$ unit vertical location is required.

6. (Original) A method according to claim 1 in which, when values for sub-pixels at $1/2^{N}$ unit horizontal and unit vertical locations, and $1/2^{N}$ horizontal and $1/2^{N-1}$ vertical locations are required, interpolating such values by taking the average of the values of a first pixel or sub-pixel located at a vertical location corresponding to that of the sub-pixel being calculated and unit horizontal location and a second pixel or sub-pixel located at a vertical location corresponding to that of the sub-pixel being calculated and $1/2^{N-1}$ unit horizontal location.

7. (Original) A method according to claim 1 in which, when values for sub-pixels at unit horizontal and $1/2^{N}$ unit vertical locations, and $1/2^{N-1}$ unit horizontal and $1/2^{N}$ unit vertical locations are required, interpolating such values by taking the average of the values of a first pixel or sub-pixel located at a horizontal location corresponding to that of the sub-pixel being calculated and unit vertical location and a second pixel or sub-pixel located at a horizontal location corresponding to that of the sub-pixel being calculated and $1/2^{N-1}$ unit vertical location.

Patent Owner's Exhibit 2003, p. 283
Amazon et al v. Nokia
IPR2024-01139

8. (Original) A method according to claim 1 in which values for sub-pixels at $1/2^N$ unit horizontal and $1/2^N$ unit vertical locations are interpolated by taking the average of values of a pixel located at a unit horizontal and unit vertical location, and a sub-pixel located at a $1/2^{N-1}$ unit horizontal and $1/2^{N-1}$ unit vertical location.

9. (Original)A method according to claim 1 in which values for sub-pixels at $1/2^N$ unit horizontal and $1/2^N$ unit vertical locations are interpolated by taking the average of values of a sub-pixel located at a $1/2^{N-1}$ unit horizontal and unit vertical location, and a sub-pixel located at a unit horizontal and $1/2^{N-1}$ unit vertical location.

10. (Original) A method according to claim 1 in which values for half of the sub-pixels at $1/2^N$ unit horizontal and $1/2^N$ unit vertical locations are interpolated by taking the average of a first pair of values of a sub-pixel located at a $1/2^{N-1}$ unit horizontal and unit vertical location, and a sub-pixel located at a unit horizontal and $1/2^{N-1}$ unit vertical location and values for the other half of the sub-pixels at $1/2^N$ unit horizontal and $1/2^N$ unit vertical locations are interpolated by taking the average of a second pair of values of a pixel located at a unit horizontal and unit vertical location, and a sub-pixel located at a $1/2^{N-1}$ unit horizontal and $1/2^{N-1}$ unit vertical location.

Patent Owner's Exhibit 2003, p. 284
Amazon et al v. Nokia
IPR2024-01139

11. (Original) A method according to claim 10 in which values for sub-pixels at $1/2^N$ unit horizontal and $1/2^N$ unit vertical locations are alternately interpolated for one such sub-pixel by taking the average of a first pair of values of a sub-pixel located at a $1/2^{N-1}$ unit horizontal and unit vertical location, and a sub-pixel located at a unit horizontal and $1/2^{N-1}$ unit vertical location and values and for a neighbouring such sub-pixel by taking the average of a second pair of values of a pixel located at a unit horizontal and unit vertical location, and a sub-pixel located at a $1/2^{N-1}$ unit horizontal and $1/2^{N-1}$ unit vertical location.

12. (Original) A method according to claim 11 in which the sub-pixels at $1/2^N$ unit horizontal and $1/2^N$ unit vertical locations are alternately interpolated in a horizontal direction.

13. (Original) A method according to claim 11 in which the sub-pixels at $1/2^N$ unit horizontal and $1/2^N$ unit vertical locations are alternately interpolated in a horizontal direction.

14. (Original) A method according to claim 1 in which when values for some sub-pixels at $1/2^N$ unit horizontal and $1/2^N$ unit vertical locations are required, such values are interpolated by taking the average of a plurality of nearest neighbouring pixels.

15. (Original) A method according to claim 1 in which N equals an integer selected from a list consisting of the values 2, 3, and 4.

Patent Owner's Exhibit 2003, p. 285
Amazon et al v. Nokia
IPR2024-01139

16. (Original) A method according to claim 1 in which in at least one of step a) and step b) interpolating sub-pixel values directly using weighted sums involves the calculation of an intermediate value for the sub-pixel values having a dynamic range greater than the specified dynamic range.

17. (Original) A method according to claim 14 in which the intermediate value for a sub-pixel having $1/2^{N-1}$ sub-pixel resolution is used the calculation of a sub-pixel value having $1/2^{N}$ sub-pixel resolution.

18. (original) A method of interpolation in video coding in which an image comprising pixels arranged in rows and columns and represented by values having a specified dynamic range, the pixels in the rows residing at unit horizontal locations and the pixels in the columns residing at unit vertical locations, is interpolated to generate values for sub-pixels at fractional horizontal and vertical locations, the method comprising:

a) when values for sub-pixels at half unit horizontal and unit vertical locations, and unit horizontal and half unit vertical locations are required, interpolating such values directly using weighted sums of pixels residing at unit horizontal and unit vertical locations;

b) when values for sub-pixels at half unit horizontal and half unit vertical locations are required, interpolating such values directly using a weighted sum of values for sub-

Patent Owner's Exhibit 2003, p. 286
Amazon et al v. Nokia
IPR2024-01139

pixels residing at half unit horizontal and unit vertical locations calculated according to step (a); and

c) when values for sub-pixels at quarter unit horizontal and quarter unit vertical locations are required, interpolating such values by taking the average of at least one pair of a first pair of values of a sub-pixel located at a half unit horizontal and unit vertical location, and a sub-pixel located at a unit horizontal and half unit vertical location and a second pair of values of a pixel located at a unit horizontal and unit vertical location, and a sub-pixel located at a half unit horizontal and half unit vertical location.

19. (Original) A method of interpolation in video coding in which an image comprising pixels arranged in rows and columns and represented by values having a specified dynamic range, the pixels in the rows residing at unit horizontal locations and the pixels in the columns residing at unit vertical locations, is interpolated to generate values for sub-pixels at fractional horizontal and vertical locations, the fractional horizontal and vertical locations being defined according to $1/2^x$ where x is a positive integer having a maximum value N, the method comprising:

a) when values for sub-pixels at $1/2^{N-1}$ unit horizontal and unit vertical locations, and unit horizontal and $1/2^{N-1}$ unit vertical locations are required, interpolating such values directly using weighted sums of pixels residing at unit horizontal and unit vertical locations;

Patent Owner's Exhibit 2003, p. 287
Amazon et al v. Nokia
IPR2024-01139

b) when a value for a sub-pixel at a sub-pixel horizontal and sub-pixel vertical location is required, interpolating such a value directly using a choice of a first weighted sum of values for sub-pixels located at a vertical location corresponding to that of the sub-pixel being calculated and a second weighted sum of values for sub-pixels located at a horizontal location corresponding to that of the sub-pixel being calculated.

20. (Original) A method according to claim 1 in which the sub-pixels used in the first weighted sum are sub-pixels residing at $1/2^{N-1}$ unit horizontal and unit vertical locations and the first weighted sum is used to interpolate a value for a sub-pixel at $1/2^{N-1}$ unit horizontal and $1/2^{N}$ unit vertical location.

21-49 (Cancelled)

Patent Owner's Exhibit 2003, p. 288
Amazon et al v. Nokia
IPR2024-01139

III. REMARKS

1. Claims 21-49 are cancelled with prejudice.

For all of the foregoing reasons, it is respectfully submitted that all of the claims now present in the application are clearly novel and patentable over the prior art of record, and are in proper form for allowance. Accordingly, favorable reconsideration and allowance is respectfully requested. Should any unresolved issues remain, the Examiner is invited to call Applicants' attorney at the telephone number indicated below.

The Commissioner is hereby authorized to charge payment for any fees associated with this communication or credit any over payment to Deposit Account No. 16-1350.

Respectfully submitted,

Geza Ziegler Jr.

Geza C. Ziegler, Jr.
Reg. No. 44,004

23 March 2005
Date

Perman & Green, LLP
425 Post Road
Fairfield, CT 06824
(203) 259-1800
Customer No.: 2512

CERTIFICATE OF MAILING

I hereby certify that this correspondence is being deposited with the United States Postal Service on the date indicated below as first class mail in an envelope addressed to the Mail Stop Amendment, Commissioner of Patents, P.O. Box 1450, Alexandria, VA 22313-1450.

Date: March 25, 2005

Signature: Meagher Baye
Person Making Deposit

Patent Owner's Exhibit 2003, p. 289
Amazon et al v. Nokia
IPR2024-01139

IN THE UNITED STATES PATENT AND TRADEMARK OFFICE

APPLICANT(s): Karczewicz et al.

SERIAL NO.: ART UNIT:

FILING DATE: Herewith EXAMINER:

TITLE: METHOD FOR SUB-PIXEL VALUE INTERPOLATION

ATTORNEY DOCKET NO.: 442-010567-US (C01)

Commissioner of Patents
P.O. Box 1450
Alexandria, VA 22313-1450

INFORMATION DISCLOSURE STATEMENT
(37 C.F.R. §1.97(b)(3))

Sir:

This information disclosure statement is being filed before the mailing of a first Office Action on the merits.

The following information is being disclosed to the Patent and Trademark Office as information that may be material to the examination of the above-identified patent application. Applicants' Attorney is aware of the following references:

US 4,937,666
US 5,452,377
US 5,488,419
US 5,521,642
US 5,568,597
US 5,570,436
US 5,844,616
US 5,901,248
US 6,219,464 B1
US 6,252,576 B1
2002/0064229

WO 99/04574

EP 0,576,290 A2

GB 2,205,707

FPM 21.3, "An Interpolator for HD-MAC Decoder", Chao et al.

"Directional Interpolation for Magnetic Resonance Angiography Data", Mehran Mashfeghi, IEEE Transactions on Medical Imaging, Vol. 12, No. 2, June 1993.

Document Q15-K-59, "H.26L Test Model Long Term Number 5 (TML-5) draft0"" ITU, Study Group 16.

Document VCEG-L20, "Complexity Reduced Motion Compensated Prediction with 1/8-pel Displacement Vector Resolution", ITU, Study Group 16.

English translation of Japanese publication No. Hei 6-14739.

Japanese Patent document No. JP 62-039920

Enclosed is a Form PTO-1449.

The filing of this Statement is not to be construed as a representation that a search has been made regarding the claimed invention (37 C.F.R. §1.97(g)) or that no other possible material information exists. In addition, the filing of this Information Disclosure Statement is not to be construed to be an admission that the information cited in the Statement is, or is considered to be, material to patentability (37 C.F.R. §1.97(h)).

The Commissioner is hereby authorized to charge payment for any fees associated with this communication or credit any over payment to Deposit Account No. 16-1350.

Patent Owner's Exhibit 2003, p. 291
Amazon et al v. Nokia
IPR2024-01139

Respectfully submitted,

Geza C. Ziegler, Jr.
Reg. No. 44,004

25 MARCH 2005
Date

PERMAN & GREEN, LLP
425 Post Road
Fairfield, CT 068424
Customer No. 2512

CERTIFICATE OF MAILING

I hereby certify that this correspondence is being deposited with the United States Postal Service on the date indicated below as first class mail in an envelope address to the Commissioner of Patents, P.O. Box 1450, Alexandria, VA 22313-1450.

Date: March 25, 2005 Signature: Meghan Bayer
Person Making Deposit

Patent Owner's Exhibit 2003, p. 292
Amazon et al v. Nokia
IPR2024-01139

INFORMATION DISCLOSURE CITATION FORM FOR PATENT APPLICATION (FORM PTO-1449) (Substitute)	Docket No.: 442-010567-US (C01) Serial No.:
	Applicant(s): Karczewicz et al.
	Filing Date: Herewith Group:

U.S. PATENTS

Initials	Patent Number	Issue Date	Name	Class	Sub-class	Filing date
	US 4,937,666	6/26/90	Yang	358	136	12/4/89
	US 5,452,377	9/19/95	Igarashi	382	238	4/01/92
	US 5,488,419	1/30/96	Hui et al.	348	402	3/15/93
	US 5,521,642	5/28/96	Park	348	409	10/7/93
	US 5,568,597	10/22/96	Nakayama et al.	395	132	5/20/94
	US 5,570,436	10/29/96	Fukushima et al.	382	300	12/8/94
	US 5,844,616	12/01/98	Collet et al.	348	441	5/28/94
	US 5,901,248	5/4/99	Fandrianto et al.	382	236	8/6/96
	US 6,219,464 B1	4/17/01	Greggain et al	382	298	8/24/99
	US 6,252,576 B1	6/26/01	Nottingham	345	127	8/6/98

U.S. PATENT PUBLICATIONS

Initials	Publication No.	Pub. Date	Name	Class	Sub-class	Filing Date
	2002/0064229	5/30/02	Nakaya	375	240.17	11/28/01

FOREIGN PATENT DOCUMENTS

Initials	Document Number	Date	Country	Name	Translation? Yes/No/n/a
	WO 99/04574	1/28/99	PCT	Robert Bosch GMBH	No
	EP 0,576,290 A2	12/29/93	Europe	Sony Corporation	N/a
	GB 2,205,707	12/14/88	United Kingdom	Sony Corporation	N/a

OTHER DOCUMENTS (Title, Author, Date, Pages, Etc., if known)

	FPM 21.3, "An Interpolator for HD-MAC Decoder", Chao et al.
	"Directional Interpolation for Magnetic Resonance Angiography Data", Mehran Mashfeghi, IEEE Transactions on Medical Imaging, Vol. 12, No. 2, June 1993.
	Document Q15-K-59, "H.26L Test Model Long Term Number 5 (TML-5) draft0"" ITU, Study Group 16.
	Document VCEG-L20, "Complexity Reduced Motion Compensated Prediction with 1/8-pel Displacement Vector Resolution", ITU, Study Group 16.
	English translation of Japanese publication No. Hei 6-14739.
	Japanese Patent Document No. JP 62-039920

Examiner's Signature:	Date Considered:

Initial if reference was considered, whether or not citation is in conformance with MPEP. Mark through citation if not considered. Include a copy of this citation form with your next correspondence to the Applicant(s).

Patent Owner's Exhibit 2003, p. 293
Amazon et al v. Nokia
IPR2024-01139

PTO/SB/06 (08-03)
Approved for use through 7/31/2006. OMB 0651-0032
U.S. Patent and Trademark Office; U.S. DEPARTMENT OF COMMERCE

Under the Paperwork Reduction Act of 1995, no persons are required to respond to a collection of information unless it displays a valid OMB control number.

PATENT APPLICATION FEE DETERMINATION RECORD

Substitute for Form PTO-875

Application or Docket Number: 11/890,117

CLAIMS AS FILED – PART I

FOR	(Column 1) NUMBER FILED	(Column 2) NUMBER EXTRA	SMALL ENTITY RATE	SMALL ENTITY FEE	OR	OTHER THAN SMALL ENTITY RATE	OTHER THAN SMALL ENTITY FEE
BASIC FEE (37 CFR 1.16(a))				$____	OR		300.00
TOTAL CLAIMS (37 CFR 1.16(c))	49 minus 20 =	* 29	X $____ =		OR	X $____ =	500.00
INDEPENDENT CLAIMS (37 CFR 1.16(b))	11 minus 3 =	* 8	X $____ =		OR	X $____ =	200.00
MULTIPLE DEPENDENT CLAIM PRESENT (37 CFR 1.16(d))			+ $____ =		OR	+ $____ =	
* If the difference in column 1 is less than zero, enter "0" in column 2.			TOTAL		OR	TOTAL	1000.00

CLAIMS AS AMENDED – PART II

AMENDMENT A

	(Column 1) CLAIMS REMAINING AFTER AMENDMENT		(Column 2) HIGHEST NUMBER PREVIOUSLY PAID FOR	(Column 3) PRESENT EXTRA	SMALL ENTITY RATE	SMALL ENTITY ADDITIONAL FEE	OR	OTHER THAN SMALL ENTITY RATE	OTHER THAN SMALL ENTITY ADDITIONAL FEE
Total (37 CFR 1.16(c))	* 20	Minus	** 8	=	X $____ =		OR	X $____ =	
Independent (37 CFR 1.16(b))	* 3	Minus	*** 0	=	X $____ =		OR	X $____ =	
FIRST PRESENTATION OF MULTIPLE DEPENDENT CLAIM (37 CFR 1.16(d))					+ $____ =		OR	+ $____ =	
cancel claim 21-49					TOTAL ADD'L FEE		OR	TOTAL ADD'L FEE	1000.00

Amdt. 3/25/05

AMENDMENT B

	(Column 1) CLAIMS REMAINING AFTER AMENDMENT		(Column 2) HIGHEST NUMBER PREVIOUSLY PAID FOR	(Column 3) PRESENT EXTRA	RATE	ADDITIONAL FEE	OR	RATE	ADDITIONAL FEE
Total (37 CFR 1.16(c))	*	Minus	**	=	X $____ =		OR	X $____ =	
Independent (37 CFR 1.16(b))	*	Minus	***	=	X $____ =		OR	X $____ =	
FIRST PRESENTATION OF MULTIPLE DEPENDENT CLAIM (37 CFR 1.16(d))					+ $____ =		OR	+ $____ =	
					TOTAL ADD'L FEE		OR	TOTAL ADD'L FEE	

AMENDMENT C

	(Column 1) CLAIMS REMAINING AFTER AMENDMENT		(Column 2) HIGHEST NUMBER PREVIOUSLY PAID FOR	(Column 3) PRESENT EXTRA	RATE	ADDITIONAL FEE	OR	RATE	ADDITIONAL FEE
Total (37 CFR 1.16(c))	*	Minus	**	=	X $____ =		OR	X $____ =	
Independent (37 CFR 1.16(b))	*	Minus	***	=	X $____ =		OR	X $____ =	
FIRST PRESENTATION OF MULTIPLE DEPENDENT CLAIM (37 CFR 1.16(d))					+ $____ =		OR	+ $____ =	
					TOTAL ADD'L FEE		OR	TOTAL ADD'L FEE	

* If the entry in column 1 is less than the entry in column 2, write "0" in column 3.
** If the "Highest Number Previously Paid For" IN THIS SPACE is less than 20, enter "20".
*** If the "Highest Number Previously Paid For" IN THIS SPACE is less than 3, enter "3".
The "Highest Number Previously Paid For" (Total or Independent) is the highest number found in the appropriate box in column 1.

This collection of information is required by 37 CFR 1.16. The information is required to obtain or retain a benefit by the public which is to file (and by the USPTO to process) an application. Confidentiality is governed by 35 U.S.C. 122 and 37 CFR 1.14. This collection is estimated to take 12 minutes to complete, including gathering, preparing, and submitting the completed application form to the USPTO. Time will vary depending upon the individual case. Any comments on the amount of time you require to complete this form and/or suggestions for reducing this burden, should be sent to the Chief Information Officer, U.S. Patent and Trademark Office, U.S. Department of Commerce, P.O. Box 1450, Alexandria, VA 22313-1450. DO NOT SEND FEES OR COMPLETED FORMS TO THIS ADDRESS. SEND TO: **Commissioner for Patents, P.O. Box 1450, Alexandria, VA 22313-1450.**

If you need assistance in completing the form, call 1-800-PTO-9199 and select option 2.

Application size fee 1250.00

PTO/SB/07 (08-03)
Approved for use through 7/31/2006. OMB 0651-0032
U.S. Patent and Trademark Office; U.S. DEPARTMENT OF COMMERCE
Under the Paperwork Reduction Act of 1995, no persons are required to respond to a collection of information unless it displays a valid OMB control number.

MULTIPLE DEPENDENT CLAIM FEE CALCULATION SHEET

Substitute for Form PTO-1360
(For use with Form PTO/SB/06)

Application Number: 11/090,717
Filing Date:
Applicant(s):

CLAIMS	AS FILED		AFTER FIRST AMENDMENT		AFTER SECOND AMENDMENT	
	Indep	Depend	Indep	Depend	Indep	Depend
1	/		/			
2		/		/		
3		/		/		
4		/		/		
5		/		/		
6		/		/		
7		/		/		
8		/		/		
9		/		/		
10		/		/		
11		/		/		
12		/		/		
13		/		/		
14		/		/		
15		/		/		
16		/		/		
17		/		/		
18	/		/			
19	/		/			
20		/		/		
21		/		X		
22		/		X		
23	/		X			
24		/		X		
25		/		X		
26		/		X		
27	/		X			
28		/		X		
29		/		X		
30		/		X		
31	/		X			
32		/		X		
33		/		X		
34	/		X			
35	/		X			
36		/		X		
37		/		X		
38		/		X		
39		/		X		
40		/		X		
41		/		X		
42	/		X			
43		/		X		
44		/		X		
45		/		X		
46	/		X			
47		/		X		
48		/		X		
49	/		X			
50						
Total Indep	11		3			
Total Depend	38		17			
Total Claims	49		20			

* May be used for additional claims or amendments

	*		*		*	
	Indep	Depend	Indep	Depend	Indep	Depend
51						
52						
53						
54						
55						
56						
57						
58						
59						
60						
61						
62						
63						
64						
65						
66						
67						
68						
69						
70						
71						
72						
73						
74						
75						
76						
77						
78						
79						
80						
81						
82						
83						
84						
85						
86						
87						
88						
89						
90						
91						
92						
93						
94						
95						
96						
97						
98						
99						
100						
Total Indep						
Total Depend						
Total Claims						

This collection of information is required by 37 CFR 1.16. The information is required to obtain or retain a benefit by the public which is to file (and by the USPTO to process) an application. Confidentiality is governed by 35 U.S.C. 122 and 37 CFR 1.14. This collection is estimated to take 12 minutes to complete, including gathering, preparing, and submitting the completed application form to the USPTO. Time will vary depending upon the individual case. Any comments on the amount of time you require to complete this form and/or suggestions for reducing this burden, should be sent to the Chief Information Officer, U.S. Patent and Trademark Office, U.S. Department of Commerce, P.O. Box 1450, Alexandria, VA 22313-1450. DO NOT SEND FEES OR COMPLETED FORMS TO THIS ADDRESS. SEND TO: Commissioner for Patents, P.O. Box 1450, Alexandria, VA 22313-1450.

If you need assistance in completing the form, call 1-800-PTO-9199 and select option 2