US005901248A

United States Patent [19]

Fandrianto et al.

[11] **Patent Number: 5,901,248**

[45] **Date of Patent: * May 4, 1999**

[54] **PROGRAMMABLE ARCHITECTURE AND METHODS FOR MOTION ESTIMATION**

[75] Inventors: **Jan Fandrianto**, Los Gatos; **Chi Shin Wang**, Los Altos Hills; **Hedley K.J. Rainnie**, Santa Clara; **Sehat Sutardja**, Cupertino; **Bryan R. Martin**, Santa Clara, all of Calif.

[73] Assignee: **8x8, Inc.**, Santa Clara, Calif.

[*] Notice: This patent is subject to a terminal disclaimer.

[21] Appl. No.: **08/692,993**

[22] Filed: **Aug. 6, 1996**

Related U.S. Application Data

[63] Continuation of application No. 07/838,380, Feb. 19, 1992, Pat. No. 5,594,813.

[51] **Int. Cl.**[6] **G06K 9/00**

[52] **U.S. Cl.** **382/236**

[58] **Field of Search** 382/238, 236; 348/407, 409, 413, 416

[56] **References Cited**

U.S. PATENT DOCUMENTS

4,200,861	4/1980	Hobach et al.	382/216
4,641,350	2/1987	Bunn	382/124
5,163,101	11/1992	Deering	382/216

Primary Examiner—Christopher S. Kelley

[57] **ABSTRACT**

A programmable motion estimator includes one dual ported memory for storing an image block, the prediction error, and a temporary block used in interpolation, and a pixel-group random access dual ported memory for storing a search window. The two ports of the two memories are selectively applied to an arithmetic logic unit, or ALU, through a multiplexer. One output of the ALU provides an absolute difference, which is furnished to a tree adder. Another output of the ALU provides an average value or a difference value, as selected, which is routed to the inputs of the image memory and the search memory. Among other tasks, the programmable motion estimator performs motion vector searching, half pixel interpolation, quarter pixel interpolation and error prediction determination.

6 Claims, 18 Drawing Sheets

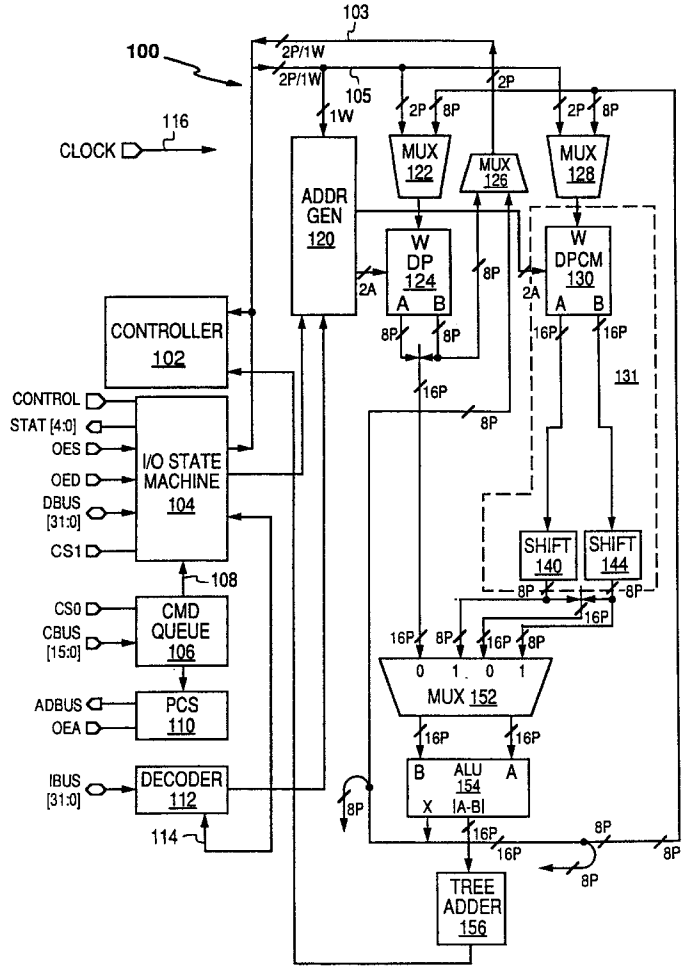

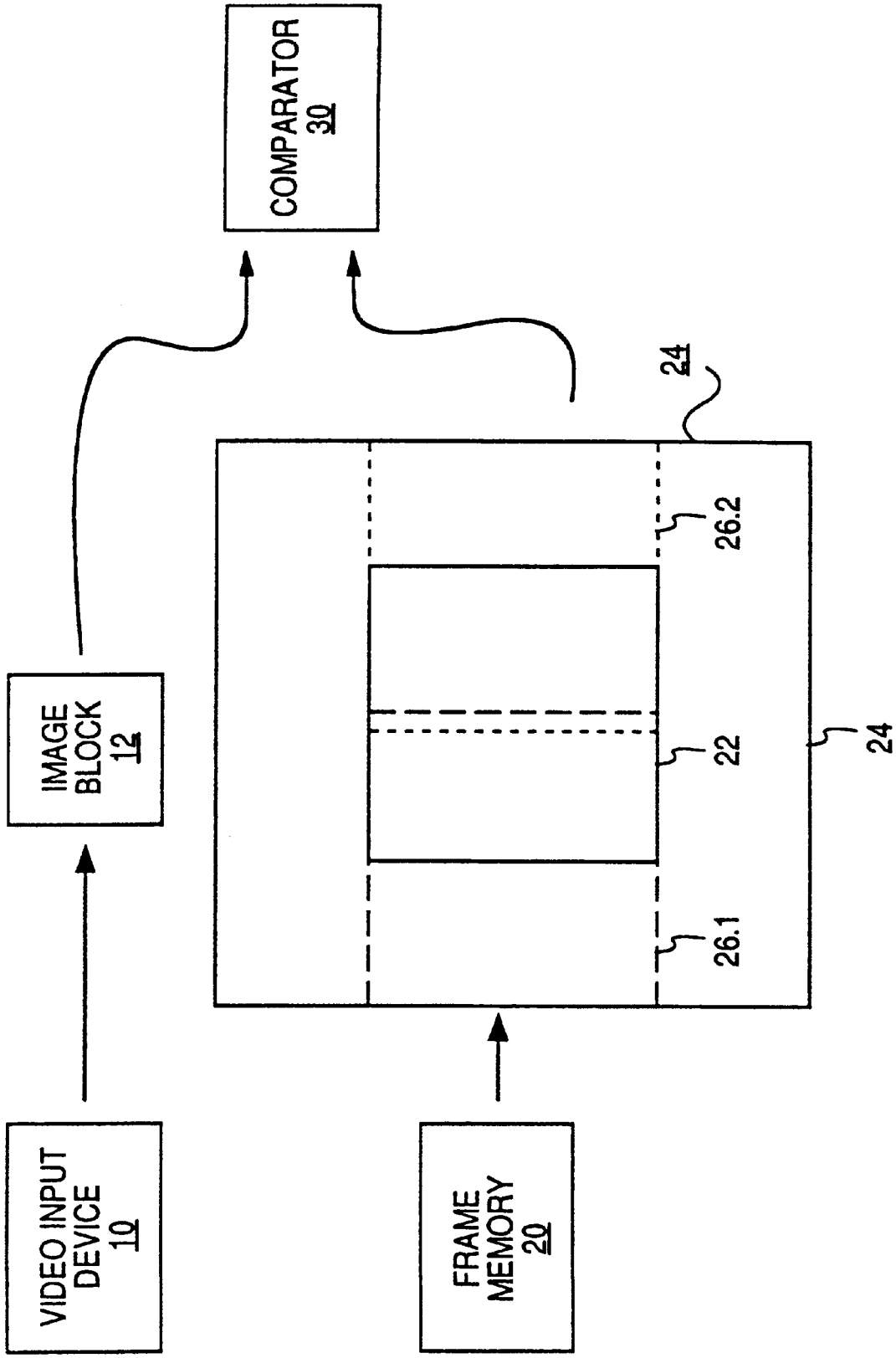
VIDEO INPUT DEVICE 10
IMAGE BLOCK 12
COMPARATOR 30
FRAME MEMORY 20
24
26.2
22
26.1
24

FIG. 1

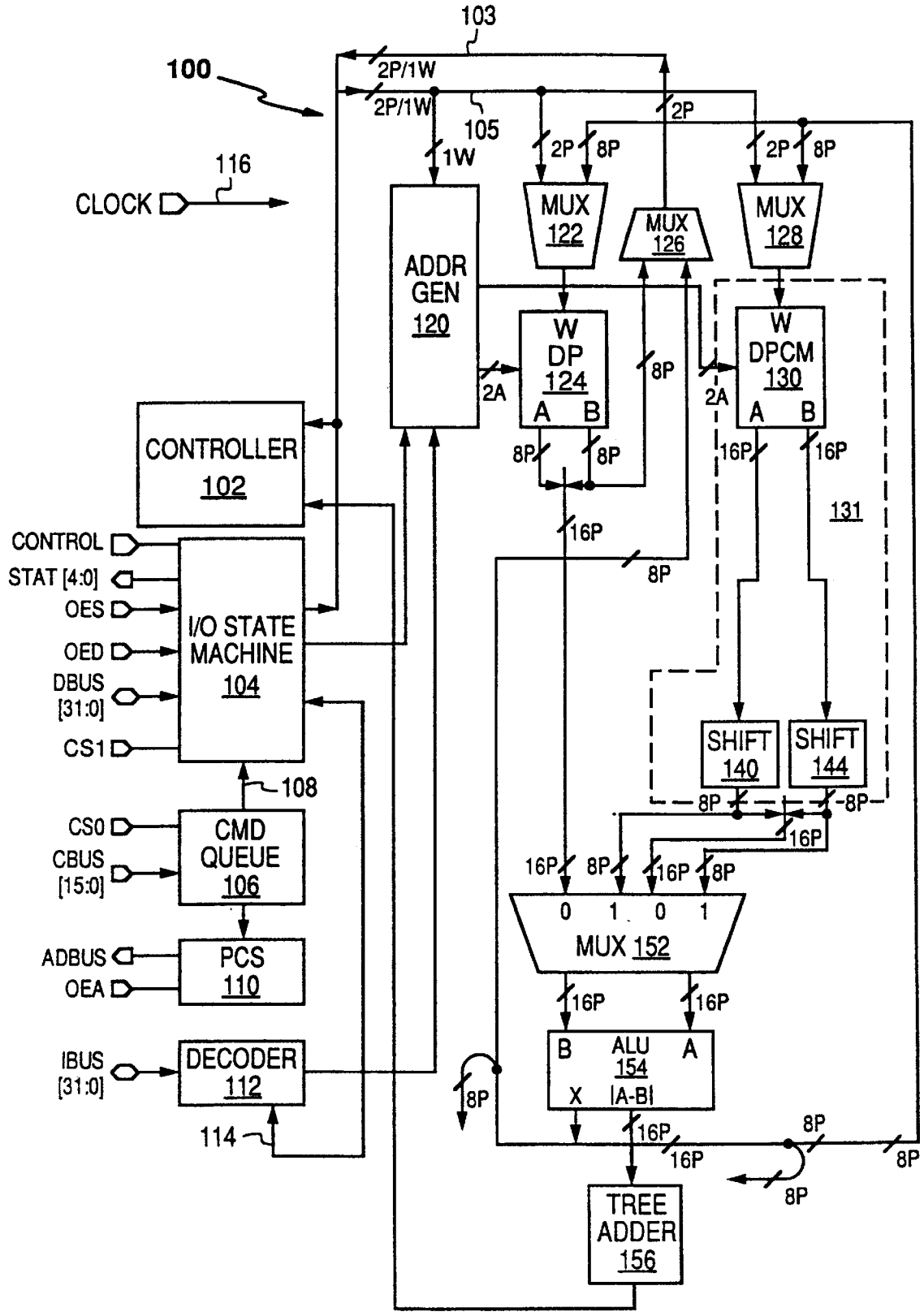
103
100
2P/1W
2P/1W
105
1W
2P
2P
8P
2P
8P
116
CLOCK
ADDR GEN 120
MUX 122
MUX 126
MUX 128
W DP 124
A B
W DPCM 130
A B
2A
8P
2A
8P
8P
16P
16P
131
CONTROLLER 102
CONTROL
STAT [4:0]
OES
OED
DBUS [31:0]
CS1
I/O STATE MACHINE 104
16P
8P
SHIFT 140
SHIFT 144
8P
8P
16P
108
CS0
CBUS [15:0]
CMD QUEUE 106
16P
8P
16P
8P
0 1 0 1
MUX 152
ADBUS
OEA
PCS 110
16P
16P
IBUS [31:0]
DECODER 112
B ALU 154 A
X |A-B|
8P
114
16P
16P
8P
8P
8P
TREE ADDER 156

FIG. 2

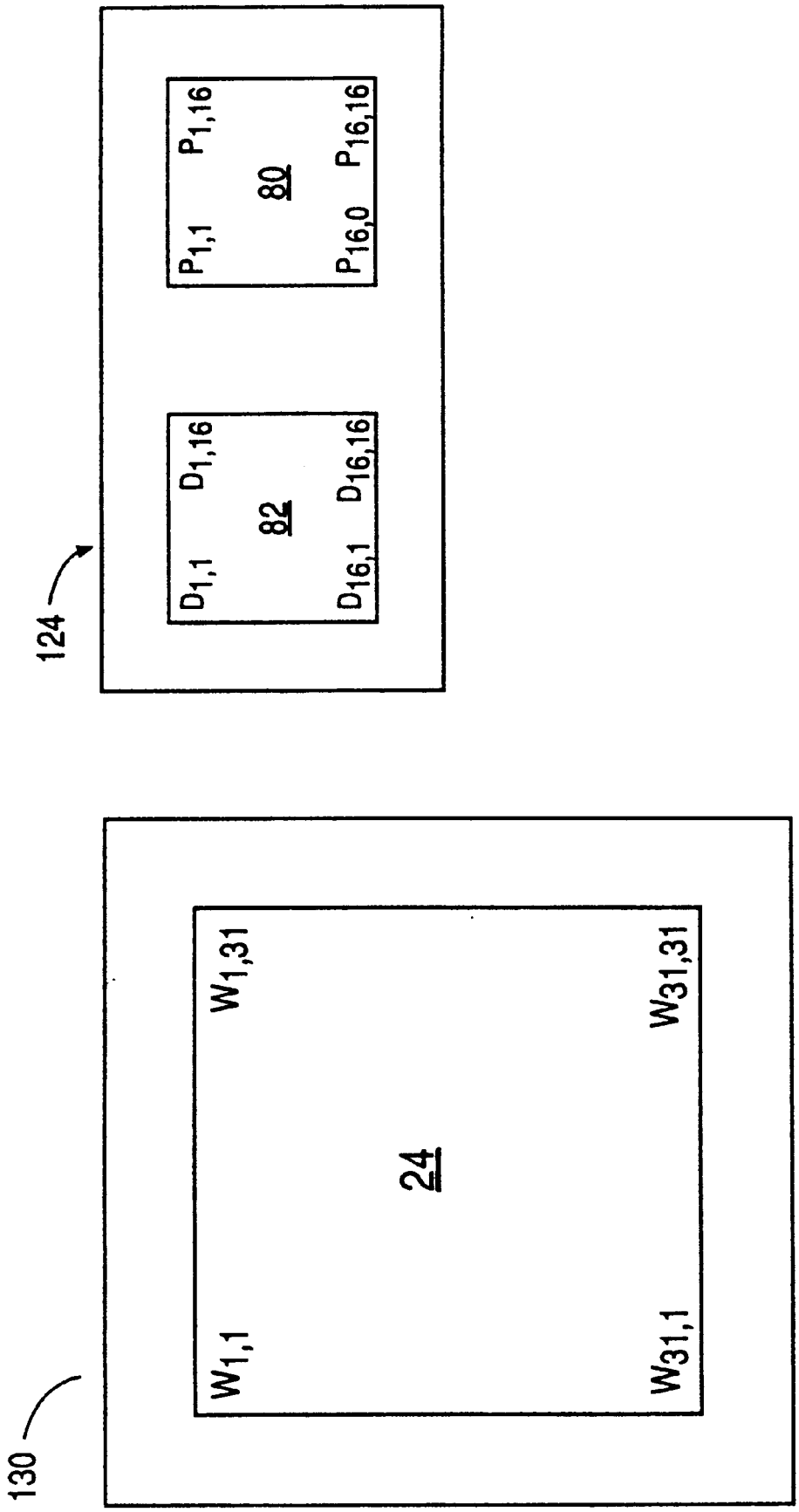
124
$D_{1,1}$
$D_{1,16}$
82
$D_{16,1}$
$D_{16,16}$
$P_{1,1}$
$P_{1,16}$
80
$P_{16,0}$
$P_{16,16}$
130
$W_{1,1}$
$W_{1,31}$
24
$W_{31,1}$
$W_{31,31}$

FIG. 3A

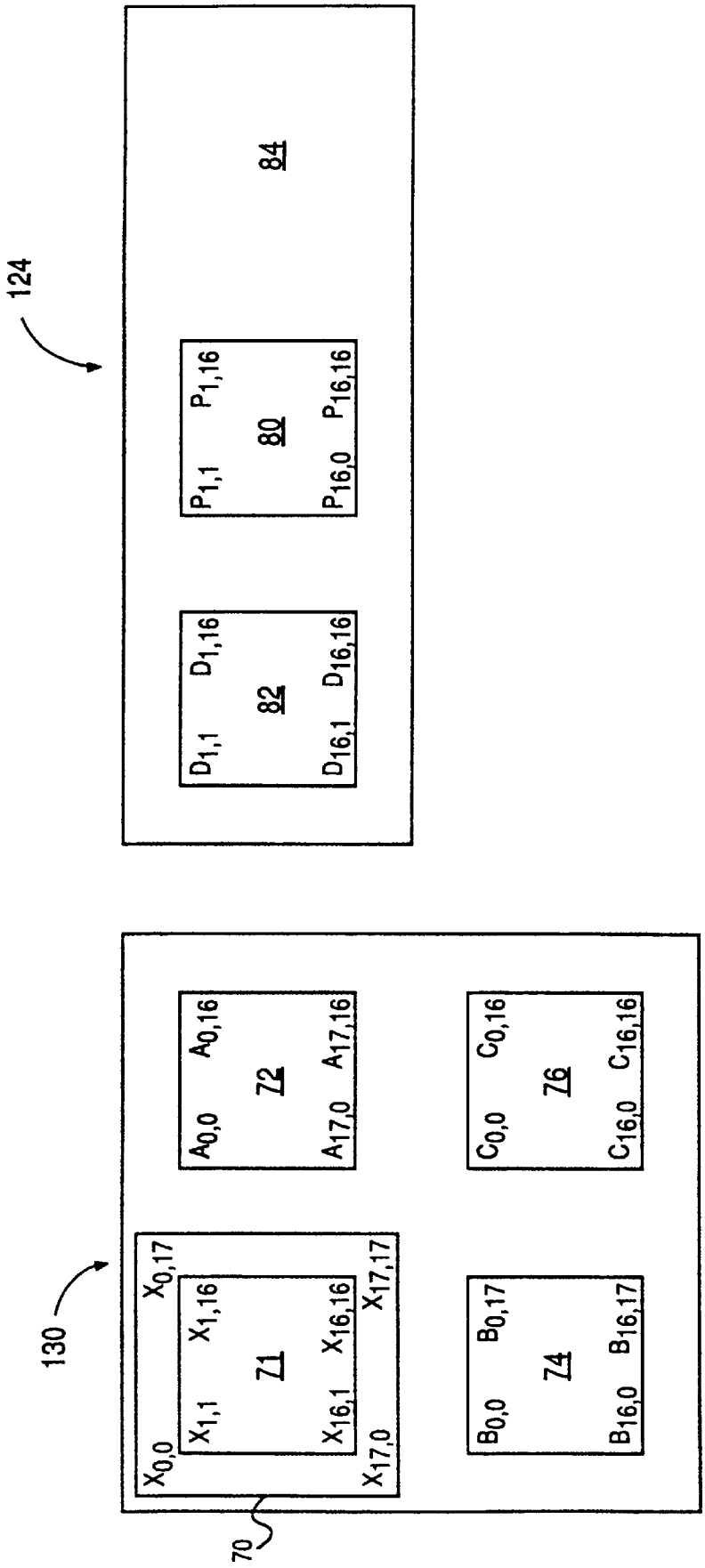
124
84
80
P1,1
P1,16
P16,0
P16,16
82
D1,1
D1,16
D16,1
D16,16
130
X0,0
X0,17
X1,1
X1,16
X16,1
X16,16
X17,0
X17,17
71
72
A0,0
A0,16
A17,0
A17,16
74
B0,0
B0,17
B16,0
B16,17
76
C0,0
C0,16
C16,0
C16,16
70

FIG. 3B

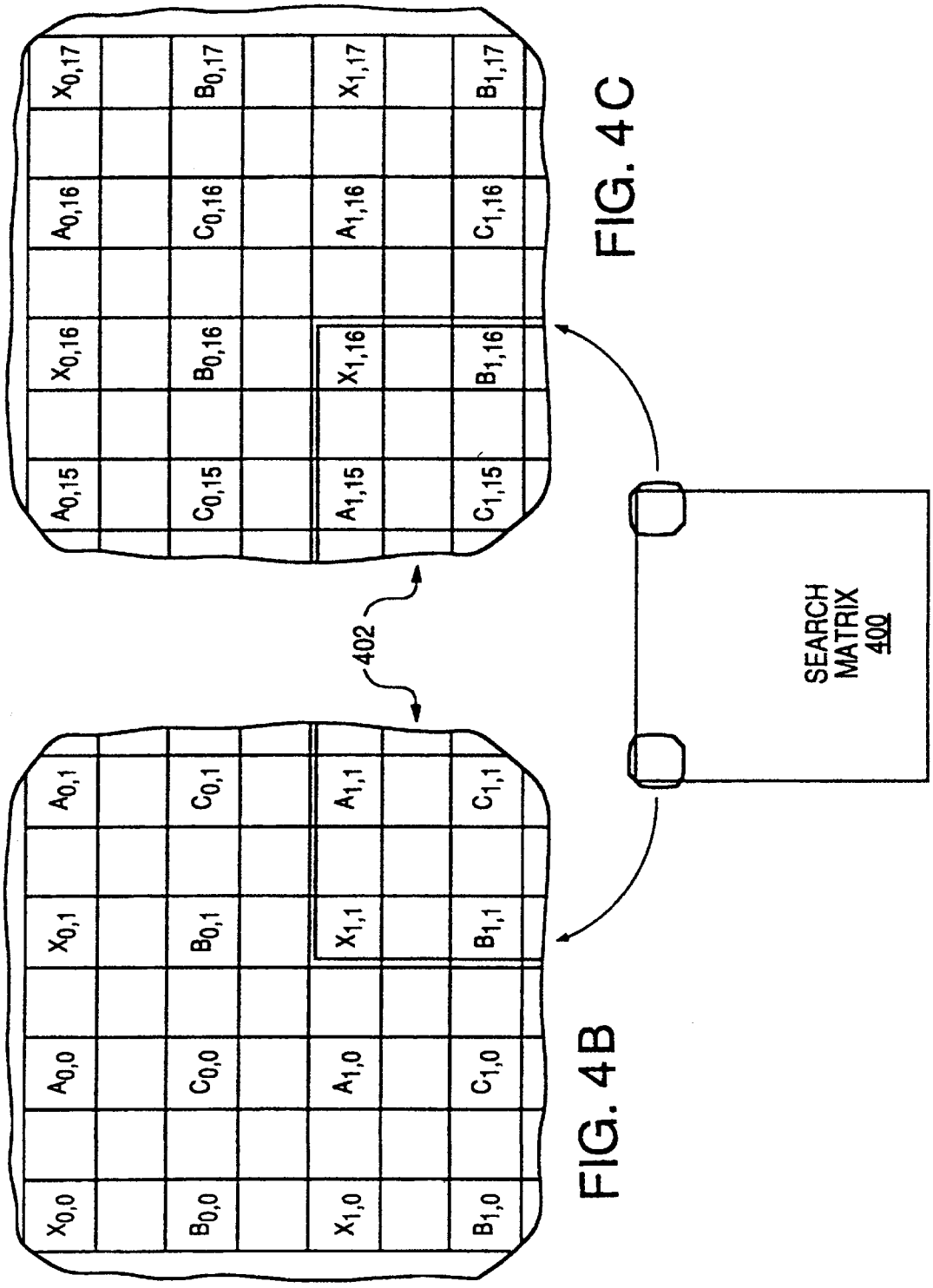

FIG. 4A

FIG. 4B

FIG. 4C

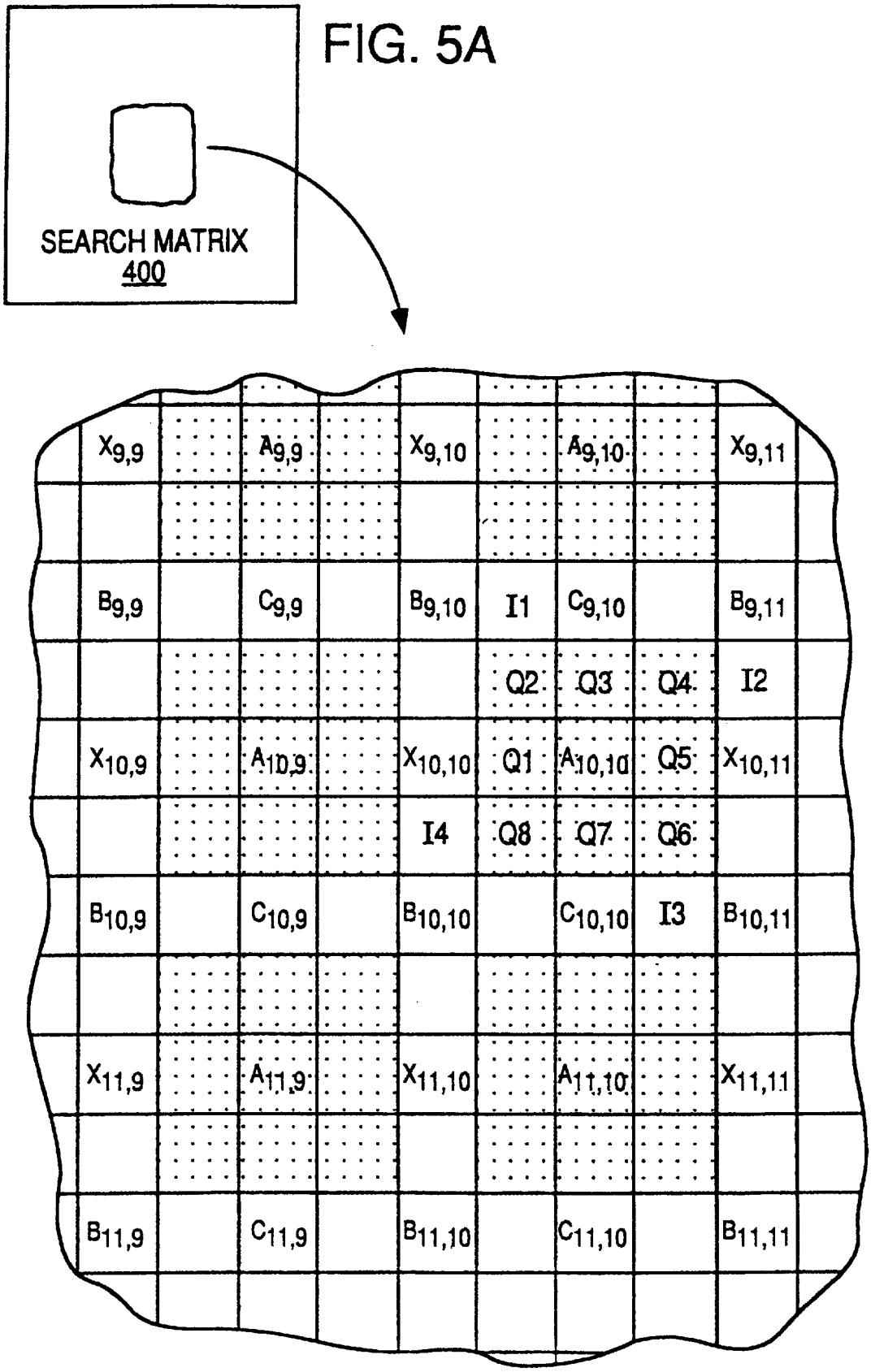
SEARCH MATRIX
400
$X_{9,9}$
$A_{9,9}$
$X_{9,10}$
$A_{9,10}$
$X_{9,11}$
$B_{9,9}$
$C_{9,9}$
$B_{9,10}$
I1
$C_{9,10}$
$B_{9,11}$
Q2
Q3
Q4
I2
$X_{10,9}$
$A_{10,9}$
$X_{10,10}$
Q1
$A_{10,10}$
Q5
$X_{10,11}$
I4
Q8
Q7
Q6
$B_{10,9}$
$C_{10,9}$
$B_{10,10}$
$C_{10,10}$
I3
$B_{10,11}$
$X_{11,9}$
$A_{11,9}$
$X_{11,10}$
$A_{11,10}$
$X_{11,11}$
$B_{11,9}$
$C_{11,9}$
$B_{11,10}$
$C_{11,10}$
$B_{11,11}$

FIG. 5A

FIG. 5B

FIG. 6

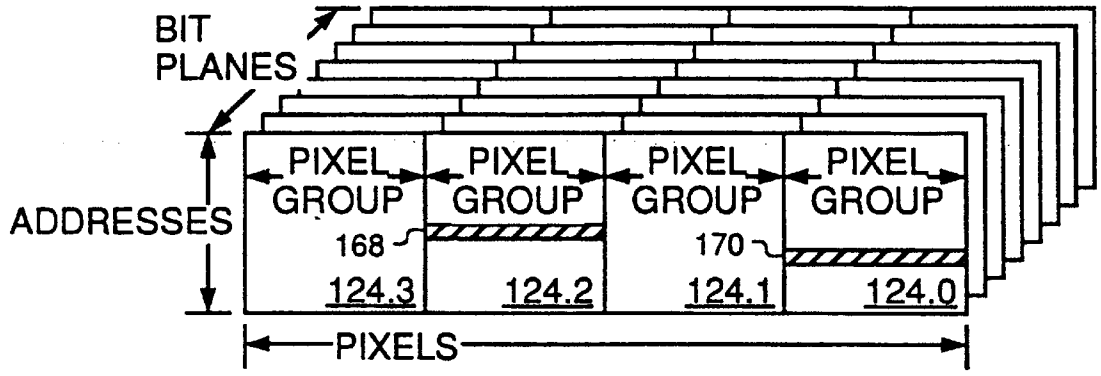
BIT
PLANES
ADDRESSES
PIXEL GROUP
PIXEL GROUP
PIXEL GROUP
PIXEL GROUP
168
170
124.3
124.2
124.1
124.0
PIXELS

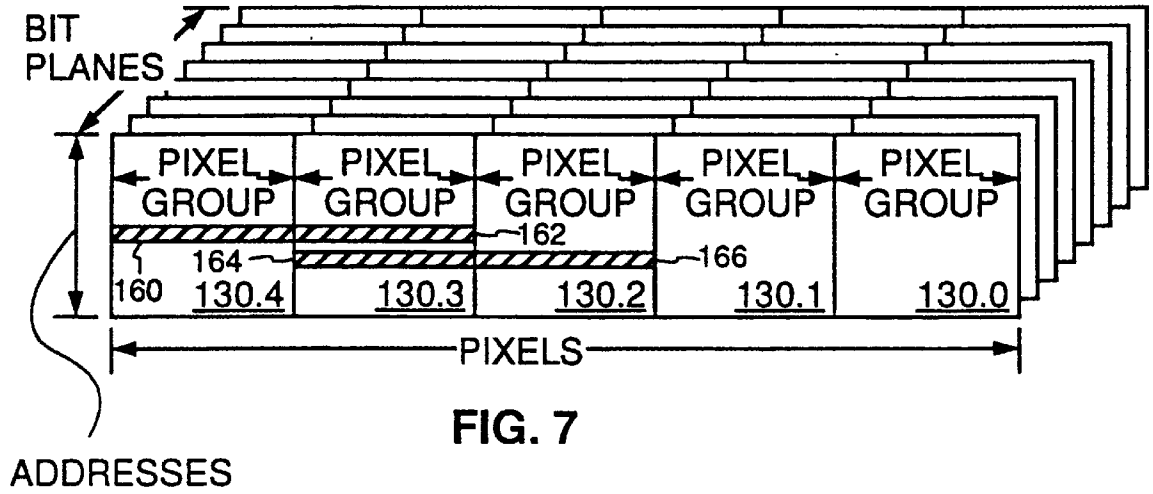
BIT
PLANES
PIXEL GROUP
PIXEL GROUP
PIXEL GROUP
PIXEL GROUP
PIXEL GROUP
162
164
166
160
130.4
130.3
130.2
130.1
130.0
PIXELS
ADDRESSES

FIG. 7

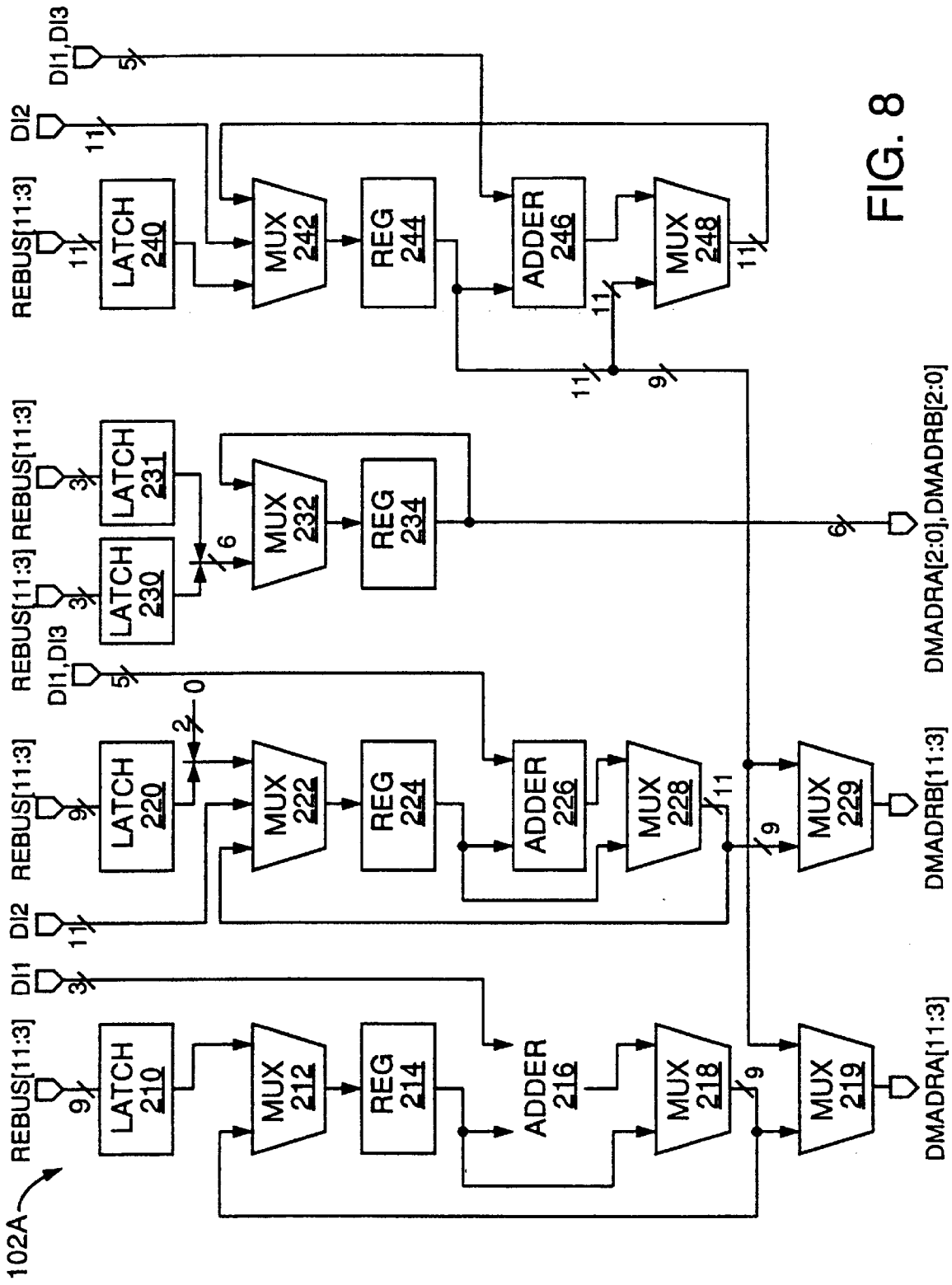
102A
REBUS[11:3]
DI1
DI2
DI1,DI3
LATCH 210
LATCH 220
LATCH 230
LATCH 231
LATCH 240
MUX 212
MUX 222
MUX 232
MUX 242
REG 214
REG 224
REG 234
REG 244
ADDER 216
ADDER 226
ADDER 246
MUX 218
MUX 228
MUX 248
MUX 219
MUX 229
DMADRA[11:3]
DMADRB[11:3]
DMADRA[2:0],DMADRB[2:0]

FIG. 8

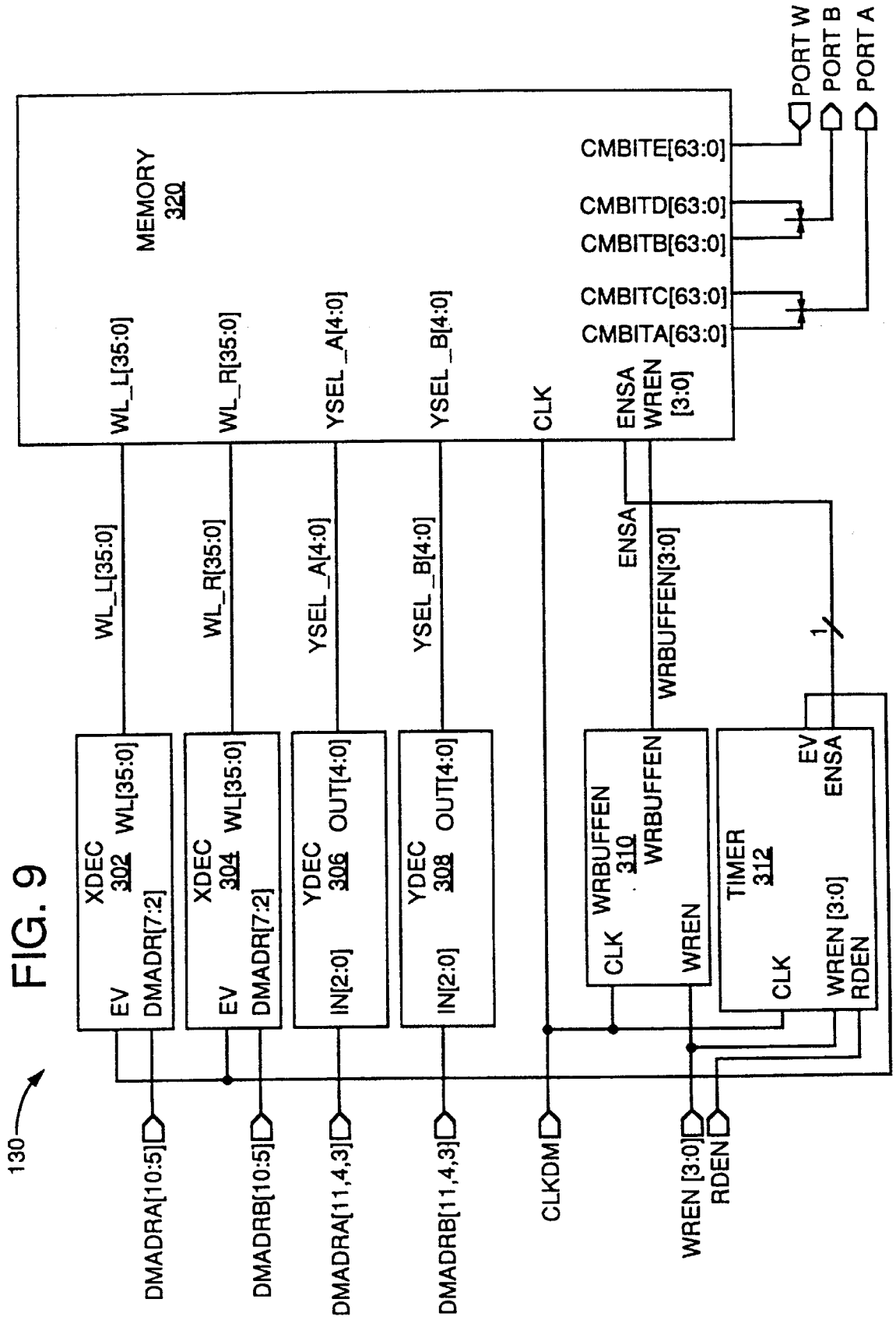
130
MEMORY
320
WL_L[35:0]
WL_R[35:0]
YSEL_A[4:0]
YSEL_B[4:0]
CLK
ENSA
WREN
[3:0]
CMBITE[63:0]
CMBITD[63:0]
CMBITB[63:0]
CMBITC[63:0]
CMBITA[63:0]
PORT W
PORT B
PORT A
XDEC
302
WL[35:0]
EV
DMADR[7:2]
XDEC
304
WL[35:0]
EV
DMADR[7:2]
YDEC
306
OUT[4:0]
IN[2:0]
YDEC
308
OUT[4:0]
IN[2:0]
WRBUFFEN
310
WRBUFFEN
CLK
WREN
TIMER
312
EV
ENSA
CLK
WREN [3:0]
RDEN
WRBUFFEN[3:0]
1
DMADRA[10:5]
DMADRB[10:5]
DMADRA[11,4,3]
DMADRB[11,4,3]
CLKDM
WREN [3:0]
RDEN

FIG. 9

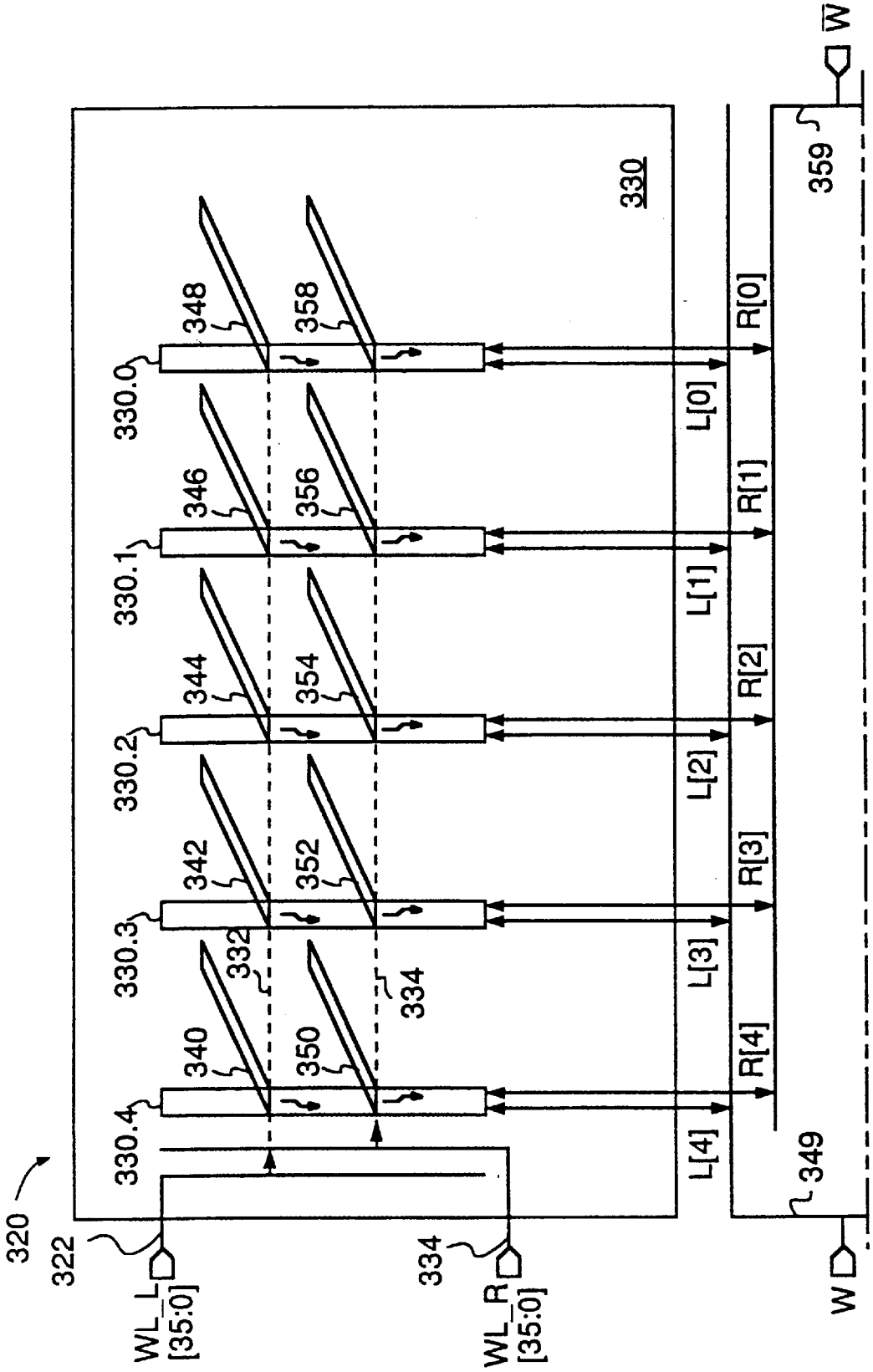
320
322
WL_L
[35:0]
334
WL_R
[35:0]
330.4
330.3
330.2
330.1
330.0
340
342
344
346
348
350
352
354
356
358
332
334
330
L[4]
L[3]
L[2]
L[1]
L[0]
R[4]
R[3]
R[2]
R[1]
R[0]
349
W
359
$\overline{W}$

FIG. 10A

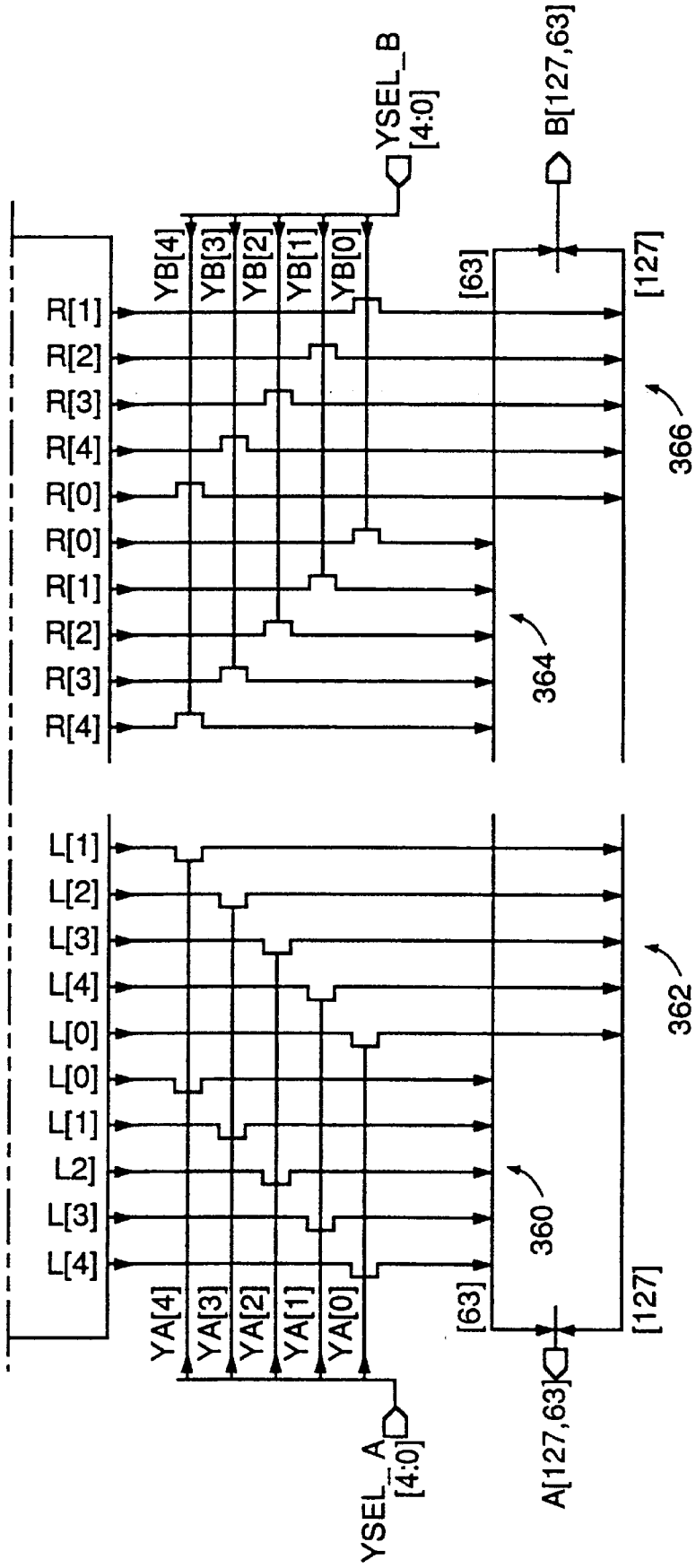
YSEL_B [4:0]
B[127,63]
YB[4]
YB[3]
YB[2]
YB[1]
YB[0]
[63]
[127]
R[1]
R[2]
R[3]
R[4]
R[0]
R[0]
R[1]
R[2]
R[3]
R[4]
366
364
L[1]
L[2]
L[3]
L[4]
L[0]
L[0]
L[1]
L2]
L[3]
L[4]
362
360
YA[4]
YA[3]
YA[2]
YA[1]
YA[0]
[63]
[127]
YSEL_A [4:0]
A[127,63]

FIG. 10B

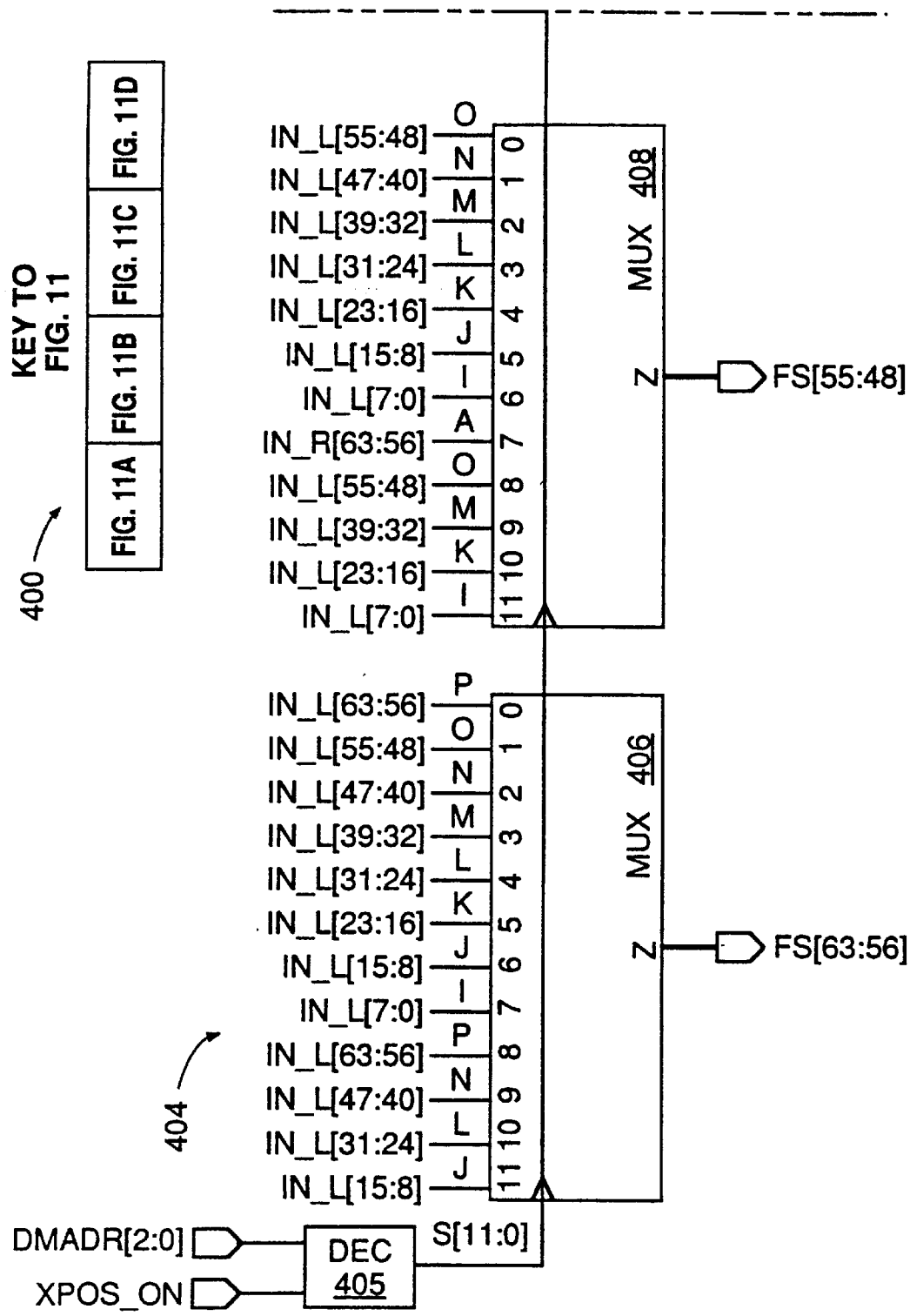
KEY TO FIG. 11
FIG. 11A
FIG. 11B
FIG. 11C
FIG. 11D
400
404
IN_L[55:48]
IN_L[47:40]
IN_L[39:32]
IN_L[31:24]
IN_L[23:16]
IN_L[15:8]
IN_L[7:0]
IN_R[63:56]
IN_L[55:48]
IN_L[39:32]
IN_L[23:16]
IN_L[7:0]
IN_L[63:56]
IN_L[55:48]
IN_L[47:40]
IN_L[39:32]
IN_L[31:24]
IN_L[23:16]
IN_L[15:8]
IN_L[7:0]
IN_L[63:56]
IN_L[47:40]
IN_L[31:24]
IN_L[15:8]
O N M L K J I A O M K I
P O N M L K J I P N L J
0 1 2 3 4 5 6 7 8 9 10 11
MUX 408
MUX 406
Z
FS[55:48]
FS[63:56]
DMADR[2:0]
XPOS_ON
DEC 405
S[11:0]

FIG. 11A

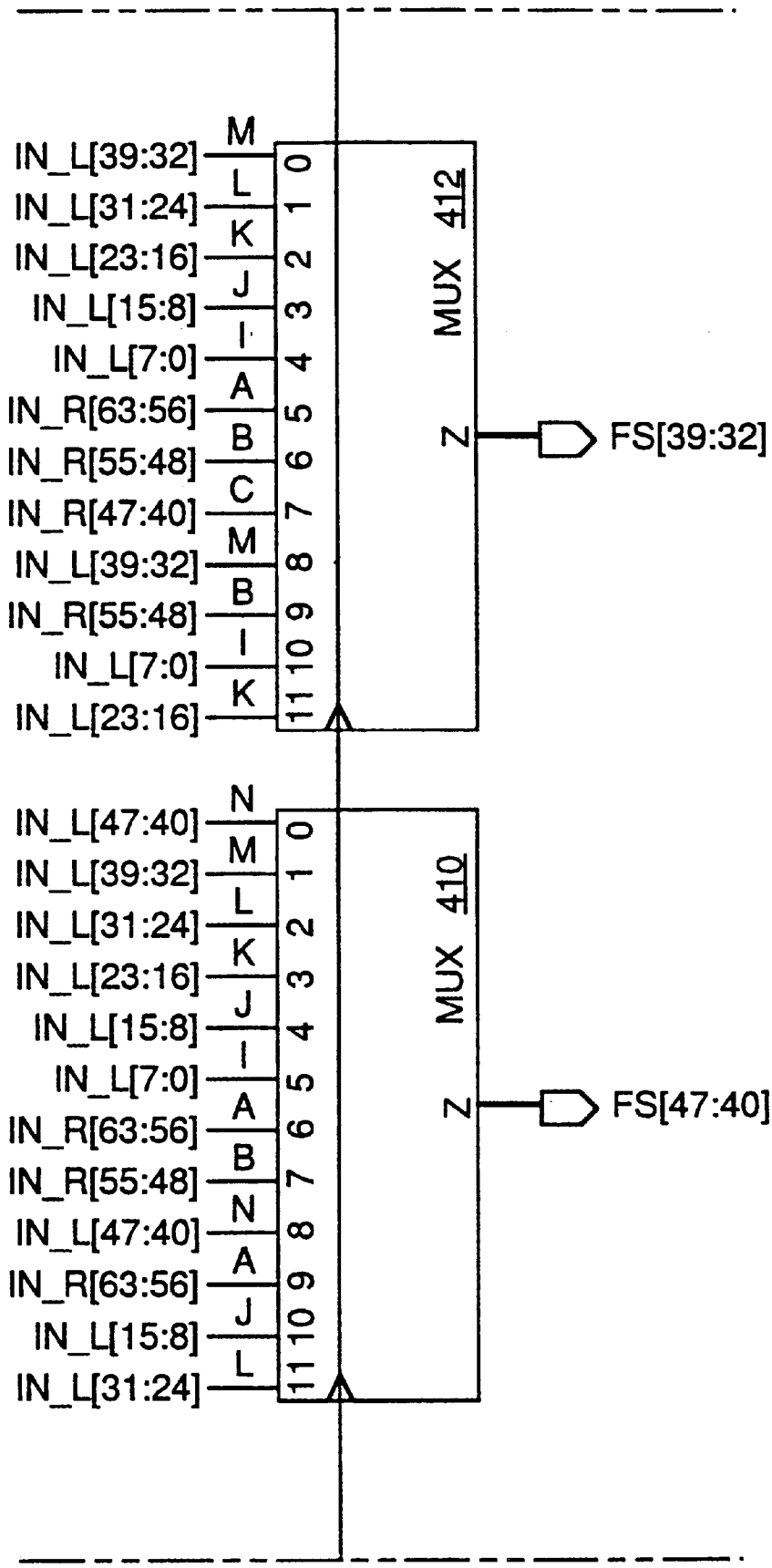
IN_L[39:32]
IN_L[31:24]
IN_L[23:16]
IN_L[15:8]
IN_L[7:0]
IN_R[63:56]
IN_R[55:48]
IN_R[47:40]
IN_L[39:32]
IN_R[55:48]
IN_L[7:0]
IN_L[23:16]
M
L
K
J
I
A
B
C
M
B
I
K
0 1 2 3 4 5 6 7 8 9 10 11
MUX 412
Z
FS[39:32]
IN_L[47:40]
IN_L[39:32]
IN_L[31:24]
IN_L[23:16]
IN_L[15:8]
IN_L[7:0]
IN_R[63:56]
IN_R[55:48]
IN_L[47:40]
IN_R[63:56]
IN_L[15:8]
IN_L[31:24]
N
M
L
K
J
I
A
B
N
A
J
L
0 1 2 3 4 5 6 7 8 9 10 11
MUX 410
Z
FS[47:40]

FIG. 11B

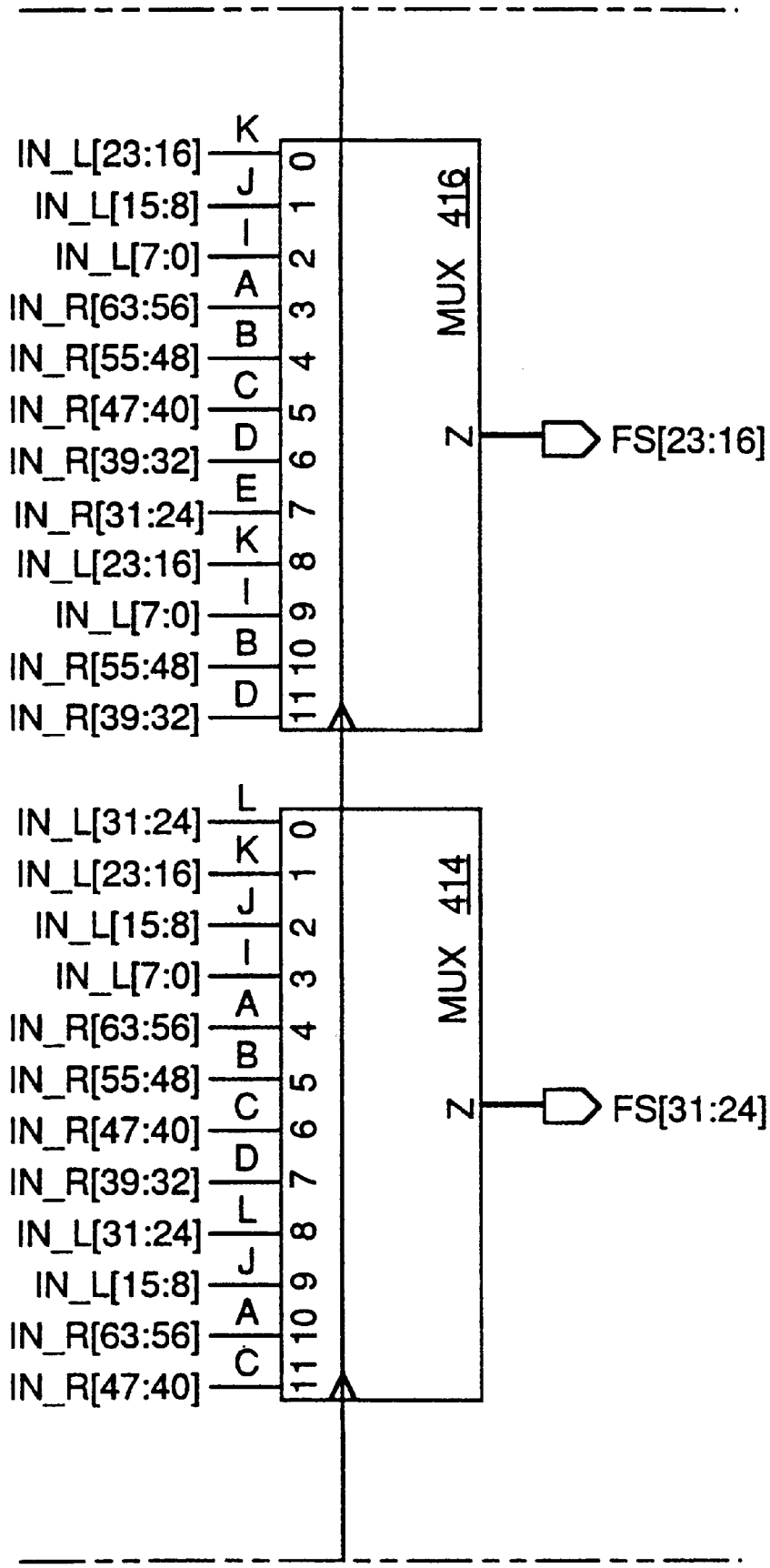
IN_L[23:16]
IN_L[15:8]
IN_L[7:0]
IN_R[63:56]
IN_R[55:48]
IN_R[47:40]
IN_R[39:32]
IN_R[31:24]
IN_L[23:16]
IN_L[7:0]
IN_R[55:48]
IN_R[39:32]
K
J
I
A
B
C
D
E
K
I
B
D
0 1 2 3 4 5 6 7 8 9 10 11
MUX 416
Z
FS[23:16]
IN_L[31:24]
IN_L[23:16]
IN_L[15:8]
IN_L[7:0]
IN_R[63:56]
IN_R[55:48]
IN_R[47:40]
IN_R[39:32]
IN_L[31:24]
IN_L[15:8]
IN_R[63:56]
IN_R[47:40]
L
K
J
I
A
B
C
D
L
J
A
C
0 1 2 3 4 5 6 7 8 9 10 11
MUX 414
Z
FS[31:24]

FIG. 11C

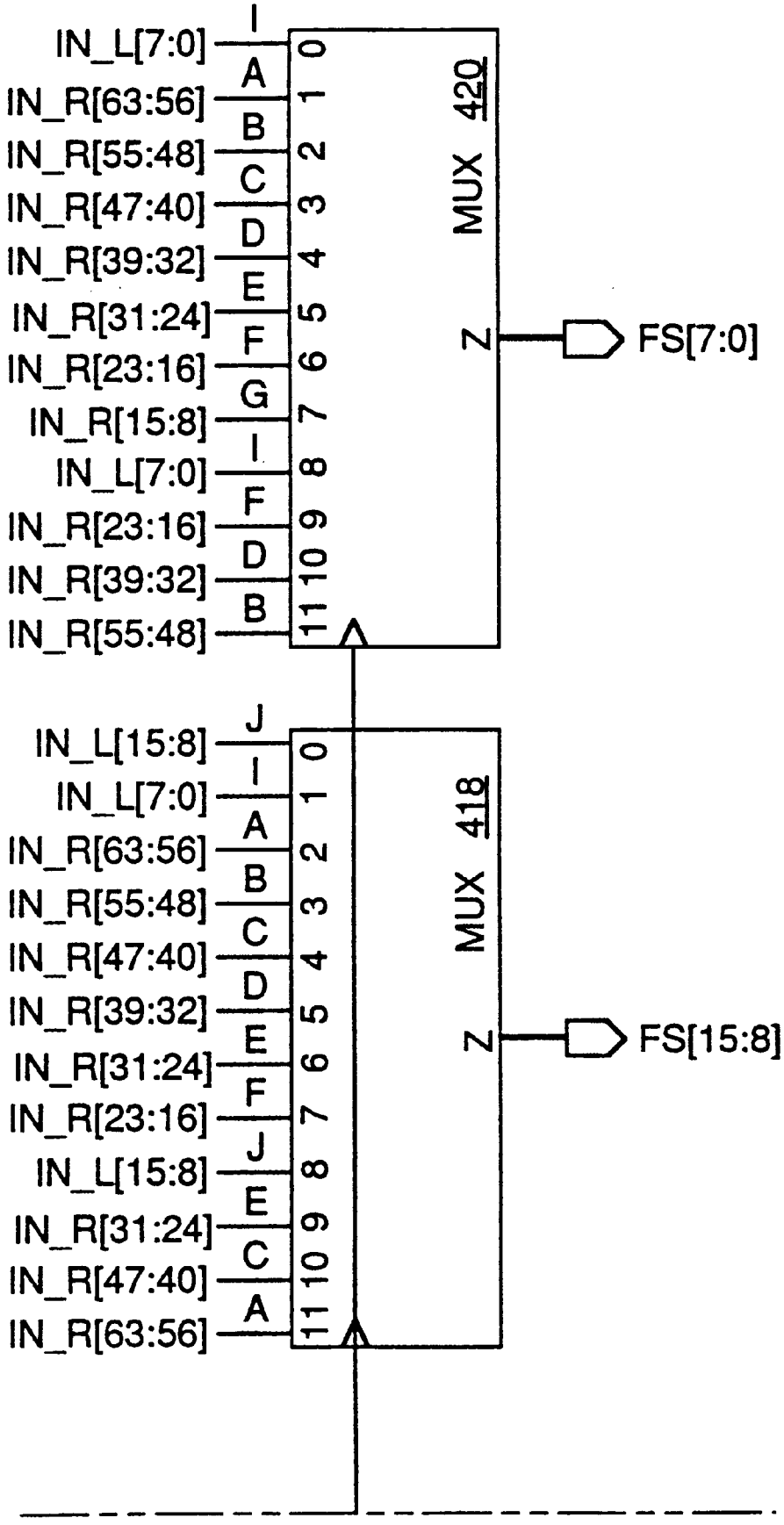
IN_L[7:0]
IN_R[63:56]
IN_R[55:48]
IN_R[47:40]
IN_R[39:32]
IN_R[31:24]
IN_R[23:16]
IN_R[15:8]
IN_L[7:0]
IN_R[23:16]
IN_R[39:32]
IN_R[55:48]
I A B C D E F G I F D B
0 1 2 3 4 5 6 7 8 9 10 11
MUX 420
Z
FS[7:0]
IN_L[15:8]
IN_L[7:0]
IN_R[63:56]
IN_R[55:48]
IN_R[47:40]
IN_R[39:32]
IN_R[31:24]
IN_R[23:16]
IN_L[15:8]
IN_R[31:24]
IN_R[47:40]
IN_R[63:56]
J I A B C D E F J E C A
0 1 2 3 4 5 6 7 8 9 10 11
MUX 418
Z
FS[15:8]

FIG. 11D

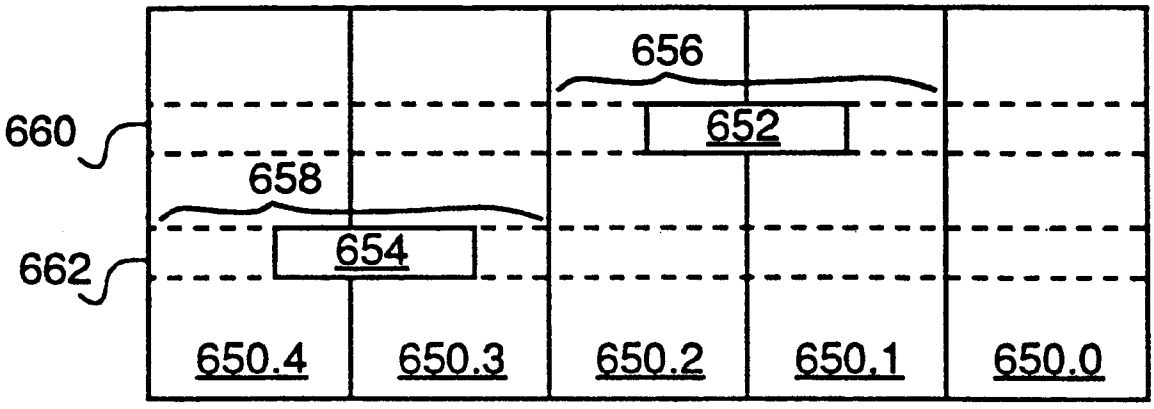

FIG. 12

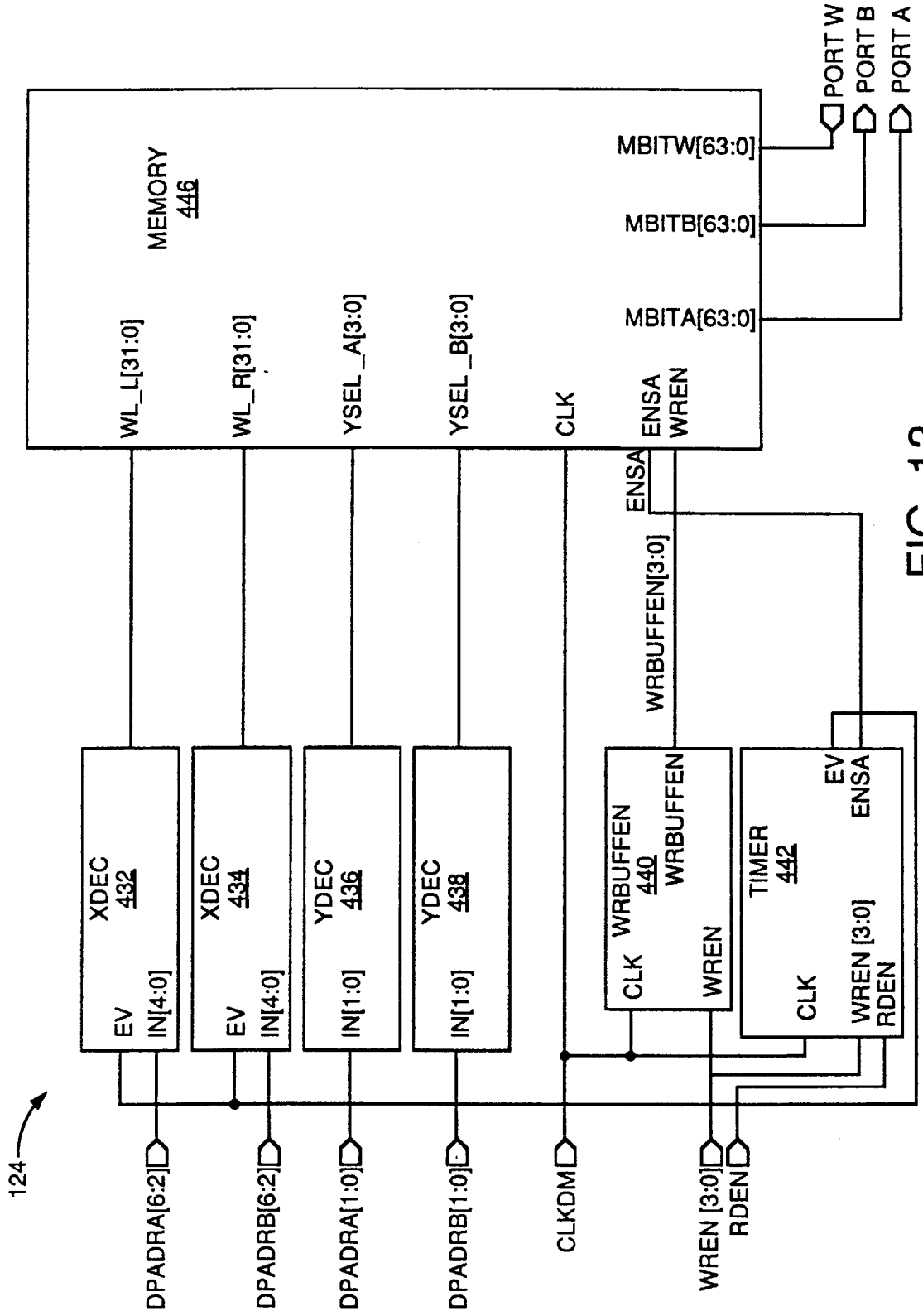
MEMORY
446
WL_L[31:0]
WL_R[31:0]
YSEL_A[3:0]
YSEL_B[3:0]
CLK
ENSA
WREN
MBITW[63:0]
MBITB[63:0]
MBITA[63:0]
PORT W
PORT B
PORT A
ENSA
WRBUFFEN[3:0]
XDEC
432
EV
IN[4:0]
XDEC
434
EV
IN[4:0]
YDEC
436
IN[1:0]
YDEC
438
IN[1:0]
WRBUFFEN
440
CLK
WRBUFFEN
WREN
TIMER
442
CLK
EV
ENSA
WREN [3:0]
RDEN
124
DPADRA[6:2]
DPADRB[6:2]
DPADRA[1:0]
DPADRB[1:0]
CLKDM
WREN [3:0]
RDEN

FIG. 13

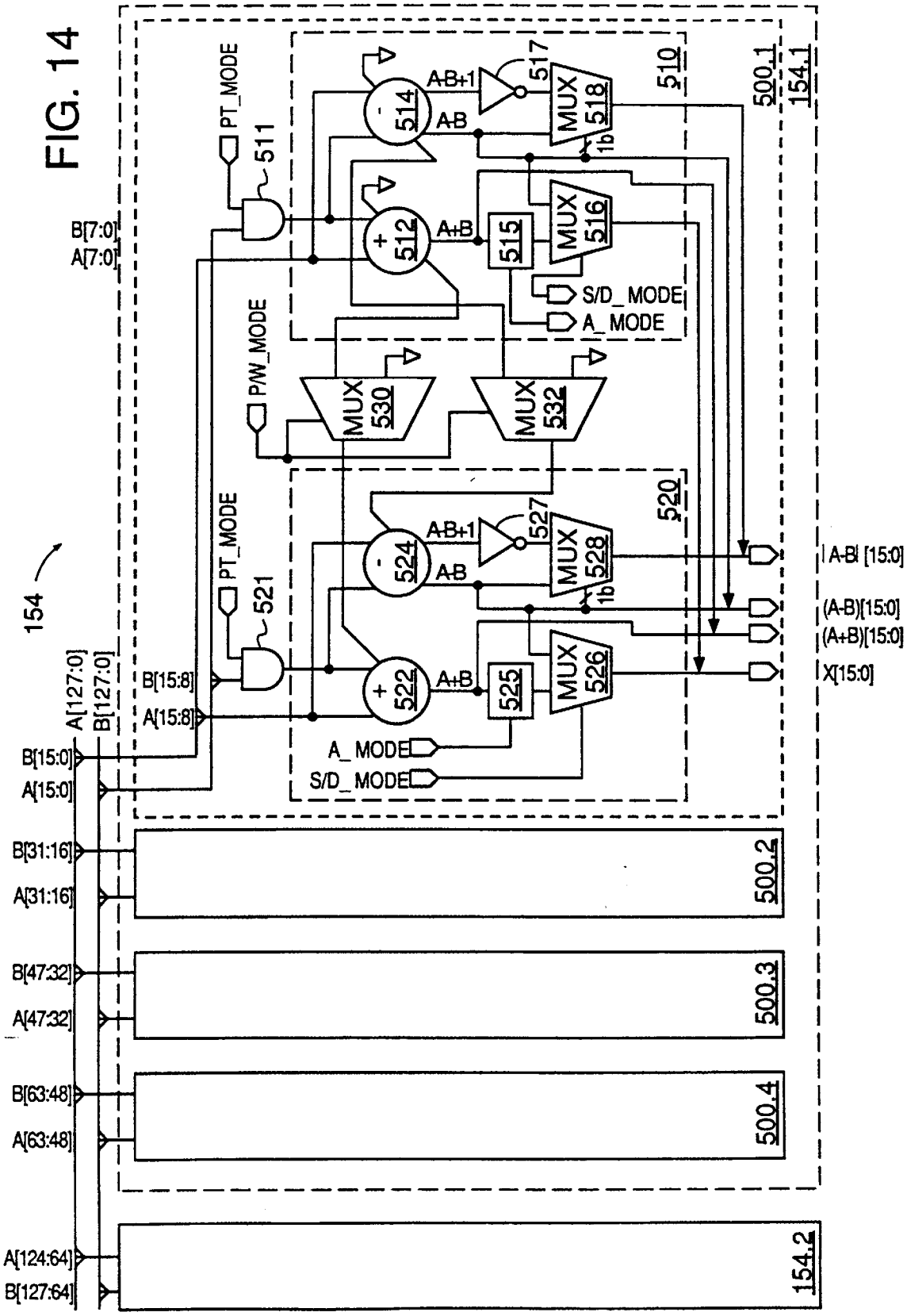
FIG. 14
154
PT_MODE
511
B[7:0]
A[7:0]
P/W_MODE
PT_MODE
521
B[15:8]
A[15:8]
A[127:0]
B[127:0]
B[15:0]
A[15:0]
B[31:16]
A[31:16]
B[47:32]
A[47:32]
B[63:48]
A[63:48]
A[124:64]
B[127:64]
A-B+1
A-B
514
517
MUX 518
1b
510
500.1
154.1
A+B
512
515
MUX 516
S/D_MODE
A_MODE
MUX 530
MUX 532
A-B+1
A-B
524
527
MUX 528
1b
520
A+B
522
525
MUX 526
A_MODE
S/D_MODE
|A-B| [15:0]
(A-B)[15:0]
(A+B)[15:0]
X[15:0]
500.2
500.3
500.4
154.2

PROGRAMMABLE ARCHITECTURE AND METHODS FOR MOTION ESTIMATION

This application is a continuation of application Ser. No. 07/838,380, filed Feb. 19, 1992 now U.S. Pat. No. 5,594, 813.

BACKGROUND

1. Field of the Invention

The present invention relates generally to motion estimation, and more specifically to a programmable architecture and methods for motion vector and/or prediction error determination.

2. Description of Related Art

Applications such as video telephone, digital television, and interactive multimedia using such digital storage technology as CD-ROM, digital audio tape, and magnetic disk require digital video coding, or video compression, to achieve the necessary high data transfer rates over relatively low bandwidth channels. Various standards have been proposed for video coding. A standard for the storage and transmission of still images has been adopted by the International Standards Organization ("ISO"), Joint Photographic Expert Group ("JPEC"); see "JPEC Technical Specification, Revision 5," JPEG-8-R5, January 1980. A standard for digital television broadcast coding at 30/45 Mb/s is under consideration; see CCIR-CMTT/2, "Digital Transmission of Component-Coded Television Signals at 30–34 Mb/s and 45 Mb/s Using the Discrete Cosine Transform," Document CMTT/2-55. A standard for video telephony and video conferencing at 64 to 1920 kb/s has been adopted by the International Consultative Committee for Telephone and Telegraph ("CCITT"); see "Draft Revision of Recommendation H.261," Document 572, CCITT SG XV, Working Party XV/1, Spec. Grp. on Coding for Visual Telephony. A standard for storage applications below 1.5 Mb/s, which are similar to the applications targeted by the CCITT standard, is under consideration by the Moving Picture Experts Group ("MPEG") of the ISO. Video coding algorithms have been proposed as contributions to the standardization activity of ISO/MPEG; see Wong et al., "MCPIC: A Video Coding Algorithm for Transmission and Storage Applications," IEEE Communications Magazine, November 1990, pp. 24–32.

Many video coding techniques include a predictive mode that realizes data compression between two different video frames by identifying how a frame is unlike a preceding frame. In predictive mode, the frame is represented in terms of a set of vectors of the displacement of respective groups of pixels in the frame relative to their position in the preceding frame, known as motion vectors; and difference information representing the degree of difference between the displaced pixels and the corresponding pixels in the preceding frame. Because the amount of data in the set of motion vectors and difference information tends to be considerably less than the amount of data in the frame itself, the two frames are adequately represented by the considerably less data present in the preceding frame plus the motion vectors and difference information. When the frame is required in uncompressed form, it is reconstructed by applying the motion vectors and difference information to the preceding frame.

Because effective video coding requires the intimate integration of digital video compression technology, integrated circuit technology, and digital storage media, and as various standards for digital video compression exist and are

proposed, a need has arisen for a flexible, high performance, low implementation cost programmable architecture for motion estimation.

SUMMARY OF THE INVENTION

The present invention is advantageous in many respects. For example, the programmability aspect of the present invention enables support of future algorithms, and allows the addition of customer-proprietary optimizations and algorithms.

These and other advantages are achieved in the present invention, which in one embodiment is an apparatus for performing an arithmetic operation on groups of pixels under program control having two memories and an arithmetic unit. One of the memories has a plurality of addressable locations N pixels in width and a read port, and N pixels from any one of the addressable locations are accessible in parallel on the read port during an address cycle. The other memory has a plurality of addressable locations greater than N pixels in width and a read port, and any N contiguous pixels from any one of the addressable locations are accessible in parallel on the read port during an address cycle. The arithmetic unit is connected to the two memory ports.

In another embodiment, a memory is included that has a plurality of addressable locations greater than N pixels in width and two read ports, and any N contiguous pixels from any one of the addressable locations are accessible in parallel on each of the read ports during an address cycle. The arithmetic unit is connected to the two ports.

In an embodiment of a pixel-group random access memory, a memory array has a plurality of addressable locations N pixels in width and a read port, and N pixels from any one of the addressable locations and N pixels from an adjacent addressable location are accessible in parallel on the read port during an address cycle. A shifter has its input coupled to the read port, and provides N pixels on its output.

In several method embodiments, groups of pixels are read from two memory ports, at least one of which is pixel-group random addressable, and used to determine sums of absolute differences, pixel differences, and pixel averages.

BRIEF DESCRIPTION OF THE DRAWINGS

In the figures, where like reference numerals indicate like parts,

FIG. **1** is a schematic diagram showing the relationship between an image block and search blocks within a search window;

FIG. **2** is a block diagram showing a motion estimation architecture in accordance with the present invention;

FIG. **3**A is a block diagram representing a memory arrangement for full pixel motion estimation;

FIG. **3**B is a block diagram representing a memory arrangement for one-half and one-quarter pixel interpolation;

FIGS. **4** and **5** are pictorial representations of full pixel positions of a search matrix and their relationship to interpolated pixels at one-half and one-quarter pixel displacements;

FIGS. **6** and **7** are schematic representations of the configuration of various memories in the architecture of FIG. **2**;

FIG. **8** is a block diagram of an address generator;

FIG. **9** is a block schematic diagram of a pixel-group random access memory useful in the datapath of the architecture of FIG. **2**;

Patent Owner's Exhibit 2007, p. 20
Amazon et al v. Nokia
IPR2024-01140

FIGS. **10**A and **10**B are a schematic representation of a portion of the pixel-group random access memory of FIG. **9**;

FIGS. **11**A–**11**D are a block schematic diagram of a funnel shifter and transpose network useful in the datapath of the architecture of FIG. **2**;

FIG. **12** is a schematic representation of the pixel-group random access memory of FIG. **9** useful in explaining the operation of the funnel shifter of FIG. **11**;

FIG. **13** is a block schematic diagram of another memory useful in the datapath of the architecture of FIG. **2**; and

FIG. **14** is a block schematic diagram of an arithmetic logic unit useful in the datapath of the architecture of FIG. **2**.

DETAILED DESCRIPTION OF THE PREFERRED AND OTHER EMBODIMENTS

Motion vector searching typically involves comparing an input or image block with search blocks within a search window centered on the frame location of the image block. The image block **12** shown in FIG. **1** is obtained, for example, from a video input device **10**, which may be a video camera, video transmission, preframe video memory, or the like. The image block **12** may be any convenient size; 16×16 pixels is exemplary. The search window **24** is obtained typically from a frame memory **20**, in which a previously processed frame is stored. The search window **24** is approximately centered on the location of the image block **12**. In FIG. **1**, the search block **22** (shown in solid line) represents the zero displacement search block. The search blocks of the search window **24** are generally of the same size as the image block **12**. The search window **24** is defined by an illustrative displacement of the search block **22** eight pixels to the left (block **26.1**, outlined in a fine phantom line) and seven pixels to the right (block **26.2**, outlined in a coarse phantom line), seven pixels up, and eight pixels down. In this embodiment, the size of the search window **24** for a full pixel search is 31×31. A larger search window **24** may be used if more memory is available.

The image block **12** is successively compared in comparator **30** with the search blocks in the search window **24**, and is represented for storage or transmission by displacement data, or motion vectors, and by difference information, or prediction error data, based on the closest matching search block in the search window **24**.

Typically, although not necessarily, luminance information is used for motion vector searching. The size of the basic luminance information unit is somewhat discretionary, and generally depends on the application and design choice. For example, in the embodiment of a vision processor described in detail in the above-referenced patent document of Fandrianto et al. entitled "Vision Processor," which is incorporated herein by reference, the basic video information processing unit, or macroblock, is a 16×16 pixel luminance matrix.

An illustrative programmable architecture **100** for implementing motion vector searching is illustrated in FIG. **2**. Rapid and efficient motion vector searching is accommodated by two high-speed, multi-ported register files in the datapath of the architecture **100**: an image block, best match block memory conveniently referred to as DP memory **124**, and a search memory conveniently referred to as DPCM memory **130**. The memories **124** and **130** are configured in an advantageous manner based on the desired video information block size and on the critical operations required of the architecture **100** in executing certain widely accepted current standards and possible future standards. Other important data path elements for motion vector estimation include two funnel shifters **140** and **144**, an arithmetic logic unit ("ALU") **154**, and a tree adder **156**. Shifter **140** is connected to port A of the DPCM memory **130**, and shifter **144** is connected to port B of the DPCM memory **130**. ALU **154** receives pixel data items from shifters **140** and **144** and from the DP memory **124**.

The video information stored in the DP memory **124** and the DPCM memory **130** are stored as blocks. A basic configuration for an motion vector searching on an integral full pixel basis is shown in FIG. **3**A. Two blocks are stored in the DP memory **124**, a "P" or preframe block **80** and a "D" block **82**. Illustratively, each block is 16×16 pixels, so that the minimum memory size is 16×32×8 bits, for example. The entire search window **24** is copied into the DPCM memory **130** from frame memory **20**. Illustratively, to contain the search window **24**, the size of DPCM memory **130** need be 31×31×8 bits.

For motion vector searching on a full integral pixel basis, the best block match is determined among all search blocks in the search window **24** by a minimum sum of absolute block differences criteria. For each search block, a minimum sum of absolute block differences is determined in accordance with the expression

$$\sum_{i,j} |W_{Xo+i,Yo+j} - P_{i,j}| \tag{1}$$

in which P_{ij} (i,j=1, . . . ,16) are the pixels of the image block **12** stored in P block **80** of DP memory **124**, and $W_{Xo+i,Yo+j}$ (i,j=1, . . . , 16) are the pixels of a given search block having an origin X_o, Y_o, in the search window **24**, where X_o, Y_o are in the illustrative range of −8 through +7. Note that the center search block **22** (FIG. **1**) is at X_o, Y_o=0,0.

The minimum sum of absolute block differences of expression (1) is implemented in the architecture of FIG. **2** as follows, although other implementations may be realized. The image block **12** is read into the P block **80**, while the entire search window **24** is read from an external memory (not shown) into the DPCM memory **130**, overwriting any previously stored search window. For each search block in the search window **24**, the differences between the pixels stored in P block **80** and the current search block is determined in ALU **154**, and summed by tree adder **156**. Two hundred fifty-six differences are computed per each sum. The sum for the current search block is compare with the minimum sum of absolute block differences stored in a register (not. shown) in controller **102**, and substituted therefor if less, along with the search block identity. These steps are repeated until all search blocks of the search window **24** stored in DPCM memory **130** have been compared with the image block **12** stored in the P block **80** of the DP memory **124**, at which point the minimum sum of absolute block differences and the search block to which it corresponds, known as the best match block, have been identified.

If no half-pixel or finer interpolation is to be done, the motion vector is known simply from the spatial identity of the best match block, while the prediction error is determined as follows. The prediction error is the difference between the best match block stored relative to location $W_{Xb,Yb}$ and the image block stored in P block **80**, or

$$PE_{ij} \Delta W_{Xb+i,Yb+j} - P_{ij} \tag{2}$$

for i,j=1, . . . , 16. This calculation is performed in the ALU **154**, and the results, the prediction error, are written into the

D block **82** of the DP memory **124**. Note that the calculation for expression (2) was previously performed in the implementation of expression (1), and could have been written into the D block **82** of the DP memory **124** or into other memory rather than recalculated. In the architecture of FIG. **2**, however, performing the calculation for expression (2) is generally faster than multiply writing into the D block **82** during the calculation of expression (1) while avoiding the need for additional memory.

In the case of integral pixel motion estimation, only part of the DPCM memory **130** needs to be updated, as the search area for the next preframe block typically overlaps with the search area of the current preframe block. For example, where the preframe block size is 16×16, typically only 16 new columns of the DPCM memory **130** need to be brought in from the external memory. This compares favorably with the alternative of bringing in 31 new columns for every new search area. As the search area of the DPCM memory **130** increases, this technique becomes increasingly useful for reducing the external memory bandwidth requirements and overall system cost. The PRAM (Pixel-group Random Access Memory) addressing mode allows addressing the DPCM memory **130** in such a way that any random N contiguous pixels can be accessed in parallel from a memory array of size greater than N pixels in width. It will be appreciated that a minor additional complexity introduced by bringing in only part of the new search area is that the starting address of the search area shifts by a fixed amount in the horizontal direction.

For improved prediction accuracy, half-pixel estimation and quarter-pixel estimation are performed after the integral pixel estimation. In motion vector searching with one-half or one-quarter pixel accuracy, the DPCM memory **130** is used to store a search window **24** that is in large part an interpolated search matrix generated from a best match search block from a less accurate estimation operation.

A basic configuration of the DP memory **124** and the DPCM memory **130** for half-pixel estimation is shown in FIG. **3**B. As in full pixel estimation, two blocks are stored in the DP memory **124**, the P block **80** and the D block **82**, and each block is 16×16 pixels. Somewhat more than four blocks are stored in the DPCM memory **130**, however. An "X" block **70** receives the best match search block and surrounding pixels loaded from the frame memory **20** or from the block stored relative to the location $W_{Xb,Yb}$. "A" block **72**, "B" block **74**, and "C"block **76** are interpolated from the X block **70** and used in half pixel and, later, quarter pixel estimation, as described below. Illustratively, the X block **70** is 18×18 pixels, the A block **72** is 18×17 pixels, the B block **74** is 17×18 pixels, and the C block **76** is 17×17 pixels, so that the preferable minimum memory size of the DPCM memory **130** for half-pixel estimation is 35×35×8 bits, for example.

A conceptual representation of an illustrative interpolated search matrix **400** is shown in FIG. **4**. The matrix **400** comprises four completely interleaved matrices corresponding to blocks **70**, **72**, **74** and **76**, respectively containing pixels $X_{r,c}$, $A_{r,c}$, $B_{r,c}$, and $C_{r,c}$, wherein "r" is the row number and "c" is the column number. The number of rows and columns in each of the interleaved X, A, B and C matrices is dependent on the application and to some extent design choice. In an illustrative arrangement useful in the vision processor disclosed in the aforementioned patent document of Fandrianto et al. entitled "Vision Processor," the 16×16 pixels of a best match search block **71** from a motion vector search on an integral full pixel basis are shown as matrix elements $X_{1,1}$ through $X_{16,16}$, bounded within the region **402** in FIG. **4** by a double line. Note that the full X block **70** includes $X_{r,c}$ (r=0, . . . , 18; c=0, . . . , 18) pixels. Pixels $X_{0,0}$ through $X_{0,17}$, $X_{0,0}$ through $X_{17,0}$, through $X_{17,17}$, and $X_{0,17}$ through $X_{17,17}$ are adjacent the best match search block **71** and are copied into X block **70** of the DPCM memory **130** to allow interpolation of fractional pixel positions about all of the pixels of the best match search block **71**. Pixels $A_{r,c}$ (r=0, . . . , 17; c=0, . . . , 16) of the A block **72** are horizontally interpolated at half-pixel locations, from the X block **70**. Pixels $B_{r,c}$ (r=0, . . . , 16; c=0, . . . , 17) of the B block **74** are vertically interpolated at half-pixel locations, from the X block **70**. Pixels $C_{r,c}$ (r=0, . . . , 16; c=0, . . . , 16) are pixels interpolated at half-pixel locations, preferably vertically from the A matrix **72** or horizontally from the B matrix **74**, but may also be interpolated diagonally from the X matrix **70**. The D block **82** and the P block **80** stored in the DP memory **124** are each 16×16 pixels. Block **70** was present during the motion vector search on an integral full pixel basis, and is merely relocated in the DPCM memory **130**, to reduce external memory bandwidth.

The A block **72**, the B block **74**, and the C block **74** are interpolated as follows. The A block **72** is formed by progressive horizontal interpolations of the X block **70**. A pixel group from a row of the X block **70** is addressed on both ports A and B of the DPCM memory **130**. Accordingly, the same pixel group is loaded into both shifters **140** and **144**. One of the pixel groups is shifted one pixel; for example, the pixel group in funnel shifter **144** is shifted one pixel, or eight bits, to the right. The unshifted output from funnel shifter **140** and the one-pixel right shifted output from the funnel shifter **144** are presented to respectively the A and B inputs of the ALU **154**, which performs a divide by two and a rounding off. The result is routed from the ALU **154** into appropriate address locations of the A block **74** in the DPCM memory **130**. This process is continued until the entire horizontal interpolation of the X block **70** is complete and the entire A block **72** created.

The B block **74** is formed by progressive vertical interpolations of the X block **70**. A pixel group from a row of the X block is addressed on port A of the DPCM memory **130**, and a pixel group from an immediately adjacent row of the X block **70** having the same column locations is addressed on port B of the DPCM memory **130**. The pixel groups on ports A and B pass through funnel shifters **140** and **144** without being shifted, and are presented to respectively the A and B ports of the ALU **154**. The ALU **154** performs a divide by two and a rounding off, and the result is routed into appropriate address locations of the B block of the DPCM memory **130**. This process is continued until the entire vertical interpolation of the X block **70** is complete and the entire B block **74** created.

The C block **76** is formed by progressive interpolation of preferably either the A block **72** vertically, or the B block **74** horizontally. Alternatively, progressive interpolation of the X block diagonally may be done. Horizontal and vertical interpolation are described above in the context of the A block **72** and the B block **74**. In diagonal interpolation of the X block **70**, one pixel group from the X block **70** is addressed on port A of the DPCM memory **130**, and a pixel group from an immediately adjacent row of the X block **70** having the same column locations is addressed on port B of the DPCM memory **130**. One of the pixel groups is shifted one pixel; for example, the pixel group in funnel shifter **144** is shifted one pixel, or eight bits, to the right. The unshifted output from funnel shifter **140** and the one-pixel right shifted output from the funnel shifter **144** are presented to respec-

tively the A and B inputs of the ALU **154**, which performs a divide by two and a rounding off. The result is routed from the ALU **154** into appropriate address locations of the C block **76** in the DPCM memory **130**. This process is continued until the entire horizontal interpolation of the X block **70** is complete and the entire C block **76** created.

Once the search matrix **400** is generated, motion vector searching on a half-pixel basis is similar to motion vector searching on a full-pixel basis, as described in association with expression (1) above. Note, however, that because the X block **70** is 18×18 rather than 16×16, the interpolated A block **72** is effectively two interpolated 16×16 blocks, the interpolated B block **74** is effectively two interpolated 16×16 blocks, and the interpolated C block is effectively four interpolated 16×16 blocks. The DPCM memory **130** must be carefully addressed to properly read these eight interpolated 16×16 blocks. Once all search blocks of the search matrix **400** stored in DPCM memory **130** have been compared with the image block **12** stored in the P block **80** of the DP memory **124**, the minimum sum of absolute block differences resides in controller **102**, along with the identity of the search block to which it corresponds, known as the best match block.

If no quarter-pixel interpolation is to be done, the motion vector is known simply from the spatial identity of the best match block, while the prediction error is determined as described above in association with expression (2). The calculation is performed in the ALU **154**, and the results, the prediction error, are written into the D block **82** of the DP memory **124**.

Motion vector searching on a quarter-pixel basis is similar to motion vector searching on a full-pixel basis, except that an absolute block difference is determined from a comparison of the P block **80** with a memory block that contains pixels displaced one-quarter pixel from the best match block. Various interpolation techniques may be used in the derivation of a given quarter pixel estimation block, depending on various factors such as the amount of memory available and the size of the memory ports and data buses. The following technique is suitable for the architecture of FIG. **2**, although other techniques may be used if desired.

Generally, the best matched block (which is either a full pixel block or a half pixel interpolated block) is copied from the DPCM memory **130** into a free block of the DP memory **124**, which at this point in the process may be the D block **82** or any additional memory block such as **84** (shown in phantom in FIG. **3**B) as might be furnished for scratchpad or other purposes. The block of DPCM memory **130** previously containing the best match block is now free to receive the current quarter pixel interpolated block. When interpolation is restricted to only horizontal and vertical interpolation, some of the quarter pixel estimation blocks are interpolated from one or more of the full and half pixel estimation search blocks (X block **70**, A block **72**, B block **74**, and C block **76**), while other quarter pixel estimation search blocks are interpolated from quarter pixel estimation search blocks. Alternatively, when diagonal interpolation is also used, all quarter pixel estimation search blocks are interpolated from the full and half pixel estimation search blocks.

The current quarter pixel interpolated block is compared with the image block stored in the P block **80** of the DP memory **124**. The comparison yields a current sum of absolute block differences, which is compared with the minimum sum of absolute block differences stored in the controller **102**. If the current sum of absolute block differences is less than the minimum sum of absolute block differences, the new value replaces the old value stored in the controller **102**, and the identity of the current quarter pixel search block is substituted for the identity of the former best match block stored in controller **102**. If the current sum of absolute block differences is equal to or greater than the minimum sum of absolute block differences, no change is made.

At the end of the quarter pixel estimation, the identity of the best match block resides in a register of the controller **102**. This may be a full pixel estimation block, a half pixel estimation block, or a quarter pixel estimation block. The motion vector is known simply from the spatial identity of the best match block, while the prediction error between the image block stored as P block **80** in the DP memory **124** and the best match search block stored in the DPCM memory **130** is determined as described above in association with expression (2). The calculation is performed in the ALU **154**, and the results, the prediction error, are written into the D block **82** of the DP memory **124**.

In the limited memory embodiment of FIG. **2**, the order in which the quarter pixel estimation search blocks are generated and compared, and the selection of obsolete full and half pixel estimation search blocks to be overwritten are somewhat discretionary. The order shown in FIG. **5** about the pixel element $A_{10,10}$ is therefore illustrative. For purposes of illustration, assume that after half pixel estimation, the half pixel interpolated A block **72** is found to be the best match block. FIG. **5** shows in the highlighted areas about the elements $A_{r,c,}$ in the interleaved search matrix **400** (see, for example, the numbered highlighted areas about element $A_{10,10}$) that eight blocks must be generated and compared with the image block **12**.

First, the best match block is moved from A block **72** of the DPCM memory **130** into the D block **82** of the DP memory **124**. In conformance with FIG. **5**, however, the pixels of the best match block now stored in the D block **82** are referred to as $A_{r,c}$. This frees up the A block **72** to hold the current quarter pixel interpolated block, the pixels of which for convenience are referred to as $Q_{r,c}$.

The first quarter pixel estimation search block of Q1 pixels is generated from a horizontal interpolation of the data in the X block **70** and the D block **82**, and stored in the A block **72** for the absolute displaced block difference calculation, in accordance with the following expression.

$$Q1_{r,c}=(X_{r,c}+A_{r,c})/2 \quad (3)$$

Consider, for example, the interpolation of the Q1 pixel to the left of pixel $A_{10,10}$. The pixel group $A_{10,8}$–$A_{10,15}$ in row ten of the D block **82** is addressed on, say, port A of the DP memory **124** and presented through the multiplexer **152** to the A port of the ALU **154**. At about the same time, a collection of pixels containing the pixel group $X_{10,8}$–$X_{10,15}$ in row ten of the X block **70** is addressed on, say, port A of the DPCM memory **130** and the pixel group $X_{10,8}$–$X_{10,15}$ is selected by shifter **140** and presented through the multiplexer **152** to the B port of the ALU **154**. The ALU **154** sums the pixel groups, divides by two, and rounds the result. An eight pixel result at the output of the ALU **154** is routed back to the DPCM memory **130**, where it is stored as pixels $Q1_{10,8}$–$Q1_{10,15}$ in the tenth row of the A block **72**.

The second quarter pixel estimation search block of Q2 pixels is generated from a vertical interpolation of the Q1 pixels with the results of a horizontal interpolation of the data in the B block **74** and the C block **76**, with the results being stored in the A block **72** (the Q2 pixels progressively overwriting the Q1 pixels) for the absolute displaced block difference calculation, in accordance with the following expression.

$$Q2_{r,c}=(Q1_{r,c}+I1_{r,c})/2 \quad (4)$$

where

$$I1_{r,c}=(B_{r-1,c}+C_{r-1,c})/2 \quad (5)$$

Consider, for example, the interpolation of the Q2 pixel to the upper left of pixel $A_{10,10}$. A collection of pixels containing the pixel group $B_{9,8}$–$B_{9,15}$ in row nine of the B block **74** is addressed on, say, port A of the DPCM memory **130** and the pixel group $B_{9,8}$–$B_{9,15}$ is selected by shifter **140** and presented through the multiplexer **152** to the A port of the ALU **154**. At about the same time, a collection of pixels containing the pixel group $C_{9,8}$–$C_{9,15}$ in row nine of the C block **76** is addressed on, say, port B of the DPCM memory **130** and the pixel group $C_{9,8}$–$C_{9,15}$ is selected by shifter **144** and presented through the multiplexer **152** to the B port of the ALU **154**. The ALU **154** sums the pixel groups, divides by two, and rounds the result. An eight pixel result at the output of the ALU **154** is routed to the DP memory **124**, where it is stored as pixels $I1_{9,8}$–$I1_{9,15}$ in the ninth row of I block **84**, a free 16×16 block of memory in the DP memory **124**. Next, the pixel group $I1_{9,8-I19,15}$ in row nine of the I block **84** is addressed on, say, port A of the DP memory **124** and presented through the multiplexer **152** to the A port of the ALU **154**. At about the same time, a collection of pixels containing the pixel group $Q1_{10,8}$–$Q1_{10,15}$ in row ten of the A block **72** is addressed on, say, port A of the DPCM memory **130** and the pixel group $Q1_{10,8}$–$Q1_{10,15}$ is selected by shifter **140** and presented through the multiplexer **152** to the B port of the ALU **154**. The ALU **154** sums the pixel groups, divides by two, and rounds the result. An eight pixel result at the output of the ALU **154** is routed back to the DPCM memory, where it is stored as pixels $Q2_{10,8}$–$Q2_{10,15}$ in the tenth row of the A block **72**.

The third quarter pixel estimation search block of Q3 pixels is generated from a vertical interpolation of the data in the C block **76** and the D block **82** (which contains data previously copied from the A block **72**), and stored in the A block **72** for the absolute displaced block difference calculation, in accordance with the following expression.

$$Q3_{r,c}=(C_{r-1,c}+A_{r,c})/2 \quad (6)$$

The interpolation of the Q3 pixel above pixel $A_{10,10}$ is done essentially as described above with respect to the Q1 pixel, but in accordance with expression (6).

The fourth quarter pixel estimation search block of Q4 pixels is generated from a horizontal interpolation of the Q3 pixels with the results of a vertical interpolation of the data in the B block **74** and the X block **70**, with the results being stored in the A block **72** (the Q4 pixels progressively overwriting the Q3 pixels) for the absolute displaced block difference calculation, in accordance with the following expression.

$$Q4_{r,c}=(Q3_{r,c}+I2_{r,c})/2 \quad (7)$$

where

$$I2_{r,c}=(B_{r-1,c+1}+X_{r,c+1})/2 \quad (8)$$

The interpolation of the Q4 pixel to the upper right of the pixel $A_{10,10}$ is done essentially as described above with espect to the Q2 pixel, but in accordance with expression (7).

The fifth quarter pixel estimation search block of Q5 pixels is generated from a horizontal interpolation of the data in the X block **70** and the D block **82**, and stored in the A block **72** for the absolute displaced block difference calculation, in accordance with the following expression.

$$Q5_{r,c}=(X_{r,c+1}+A_{r,c})/2 \quad (9)$$

The interpolation of the Q5 pixel to the right of the pixel $A_{10,10}$ is done essentially as described above with respect to the Q1 pixel, but in accordance with expression (9).

The sixth quarter pixel estimation search block of Q6 pixels is generated from a vertical interpolation of the Q5 pixels with the results of a horizontal interpolation of the data in the B block **74** and the C block **76**, with the results being stored in the A block **72** (the Q6 pixels progressively overwriting the Q5 pixels) for the absolute displaced block difference calculation, in accordance with the following expression.

$$Q6_{r,c}=(Q5_{r,c}+I3_{r,c})/2 \quad (10)$$

where

$$I3_{r,c}=(B_{r,c+1}+C_{r,c})/2 \quad (11)$$

The interpolation of the Q6 pixel to the lower right of the pixel $A_{10,10}$ is done essentially as described above with respect to the Q2 pixel, but in accordance with expression (10).

The seventh quarter pixel estimation search block of Q7 pixels is generated from a vertical interpolation of the data in the C block **76** and the D block **82**, and stored in the A block **72** for the absolute displaced block difference calculation, in accordance with the following expression.

$$Q7_{r,c}=(C_{r,c}+A_{r,c})/2 \quad (12$$

The interpolation of the Q7 pixel below pixel $A_{10,10}$ is done essentially as described above with respect to the Q1 pixel, but in accordance with expression (12).

The eighth quarter pixel estimation search block of Q8 pixels is generated from a horizontal interpolation of the Q7 pixels with the results of a vertical interpolation of the data in the B block **74** and the X block **70**, with the results being stored in the A block **72** (the Q8 pixels progressively overwriting the Q7 pixels) for the absolute displaced block difference calculation, in accordance with the following expression.

$$Q8_{r,c}=(Q7_{r,c}+I4_{r,c})/2 \quad (13)$$

where

$$I4_{r,c}=(B_{r,c}+X_{r,c})/2 \quad (14)$$

The interpolation of the Q8 pixel to the lower left of the pixel $A_{10,10}$ is done essentially as described above with respect to the Q2 pixel, but in accordance with expression (13).

It will be appreciated that a great many permutations of the order of derivation of pixels Q1–Q8 may be practiced, if desired. For example, the Q2 pixels may be derived from a horizontal interpolation of the Q3 pixels with the results of a vertical interpolation of the data in the B block **74** and the X block **70**. As a further example, the Q2 pixels may be derived from a diagonal interpolation of the data in the A block **72** and the B block **74**.

It will also be appreciated that a variety of search techniques may be used to search through the search window **24**. For example, in the full search described above, the image block **12** is compared with every search block in the search window **24**. Given a search block of 16×16 pixels and a search window of 31×31 pixels, 256 comparisons are required. The "jump" search is a faster although less accurate type of search, in which some of the search blocks are regularly jumped over so that the image block **12** is com-

pared with only a subset of all search blocks in the search window **24**. For example, in a two pixel interval jump search, the image block **12** is compared with every other search block in the search window **24**, requiring 64 comparisons (counting partial search blocks). A binary search is a faster search yet. In the initial step of the binary search, a search is conducted with a binary jump size equal to a division of the block size. In the next step, the best match block from the first phase search becomes the center of a new smaller search area, and this new smaller search area is searched with a smaller binary jump size. This last process step is repeated until a full search (binary jump size 1) is completed. For example, given a search block size of 16×16 pixels and a first jump size of 4 pixels, the initial step of the binary search of the 31×31 search window **24** requires 16 comparisons. A best match block is identified, a new smaller jump interval of two pixels is selected, a new smaller search area centered on the best match block and extending to all pixels surrounding the best match block to a distance of the old jump interval halved, or 2 pixels (to exclude the nearest blocks compared in the previous search) is defined (size 20×20), and the new window is searched, requiring 8 comparisons. A new best match block is identified, a final smaller jump interval of one pixel is selected, a new smaller search area centered on the best match block and extending to all pixels surrounding the best match block to a distance of the old jump interval halved, or 1 pixel (to exclude the nearest blocks compared in the previous search) is defined (size 18×18), and the new window is searched, requiring 8 comparisons. The total number of comparisons in the binary search is 16+8+8, or 32 comparisons.

While the architecture **100** of FIG. **2** is suitable for a variety of vision processing applications, an implementation particularly suitable for a programmable vision processor such as disclosed in the above-referenced patent document of Fandrianto et al. entitled "Vision Processor" is now described.

In the motion vector searching architecture **100** of FIG. **2**, a reduced instruction set controller **102** executes instructions for serial operations, and runs in parallel with the data path of the architecture **100**. Controller **102** is any simple, general purpose controller of conventional design capable of executing simple arithmetic and logic operations. Controller **102** is operated by microcode, but may be software controlled if desired. If desired, a more powerful processor or a less flexible state machine may be used in place of controller **102**. An input/output ("I/O") state machine **104** capable of transferring data between system memory (typically external page-mode DRAMs; not shown) and the controller **102** and memories **124** and **130** of the motion vector search architecture **100** is provided so that DMA (direct memory access) data transfers can be overlapped with compression operations. Various control signals for starting and terminating DMA transfers are received through port CONTROL and applied to the I/O state machine **104**, which distributes related control signals throughout the architecture **100**. The I/O state machine **104** supports burst mode transfers with system memory (not shown) over data bus ("DBUS") [**31**:**0**]. Command queue **106** is a set of registers which receive and store command data received through command bus ("CBUS") [**15**:**0**] from a host controller. Instructions for the I/O state machine **104** are furnished over bus **108** by command queue **106**, which also provides command data to a program counter and sequencer ("PCS") **110**. PCS **110** is responsive to an output enable address ("OEA") signal for incrementing an address stored therein and furnishing the address over an address bus ("ADBUS") to a program and microcode memory (not shown). A decoder **112** receives program and microcode information on an instruction bus ("IBUS") [**31**:**0**] from the program and microcode memory (not shown). These various elements of the control system and the manner in which they control data path operations are disclosed in further detail in the aforementioned patent document of Fandrianto et al. entitled "Vision Processor," and are hereby incorporated herein by reference thereto.

In a vision processor embodiment, the DP memory **124** is used generally to store current (or preframe), matched, and other temporarily needed blocks, and hence functions to store image blocks for motion estimation, intermediate blocks for interpolation, and the prediction error and image blocks for DCT computations in motion-compensated based digital image processing. For these purposes, the DP memory **124** is most conveniently conceptualized as a single memory of 128 addressable locations, each 8 pixels wide. The DP memory **124** is implemented for layout purposes as a set of four individually addressable A×B (address×pixel) banks of pixels **124.0**–**124.3**, as illustrated in FIG. **6**. Each of the banks **124.0**–**124.3** is configured as a collection of 32 addressable groups of 8 pixels per group, which is equivalent to a 16×16 pixel macroblock size. As each pixel consists of 8 bits, the DP memory **124** has eight bit planes, as shown in FIG. **6**.

It will be appreciated, however, that only half of the DP memory **124** as configured for vision processing is required for motion vector searching. The D block **82** and the P block **80** are each stored in 32 addressable groups of the DP memory **124**, the remaining 64 addressable groups of memory being equivalent to two blocks of memory that are available for temporary block storage during motion estimation, to implement other motion estimation algorithms requiring additional memory, and for purposes unrelated to motion vector estimation.

The output from each of the ports A and B of the DP memory **124** is 8 pixels. For example, pixel group **168** of bank **124.2** may be addressed and read on port A, while pixel group **170** of bank **124.0** may be addressed and read on port B. The ports A and B of the DP memory **124** are capable of being read essentially simultaneously.

In a vision processor embodiment, the DPCM memory **130** is used generally to store the search window **24**, whether copied from frame memory **20** or interpolated from a best match block. For this purpose, the DPCM memory **130** is most conveniently conceptualized as a set of five M×N (address×pixel) banks of pixels **130.0**–**130.4**, as illustrated in FIG. **7**. Each of the banks **130.4**–**130.0** is configured as a collection of 36 addressable groups of 8 pixels each. As each pixel consists of 8 bits, the DPCM memory **130** has eight bit planes, as shown in FIG. **7**. In integral pixel estimation, the size of the search window **24** is 31×31 pixels, requiring only four banks per row. In half-pixel estimation, the X block **70** uses 18 contiguous pixels per row, the A block **72** uses 17 contiguous pixels per row, the B block **74** uses 18 contiguous pixels per row, and the C block **76** uses 17 contiguous pixels per row.

A useful feature of the DPCM memory **130**, particularly in conjunction with the shifters **140** and **144**, is that when any one group of pixels in a bank of the DPCM memory **130** is accessed and read on one of the ports A or B of the DPCM memory **130**, the adjacent group of pixels from an adjacent bank is automatically accessed and read on the same port. For example, if pixel group **160** of bank **130.4** is addressed and read on port A, pixel group **162** of bank **130.3** is also read on port A. If pixel group **164** of bank **130.3** is addressed and read on port B, pixel group **166** of bank **130.2** is also

read on port B. Hence, the output from each of the ports A and B of the DPCM memory **130** is 16 pixels, 8 pixels from the selected group and 8 pixels from the adjacent group. The ports A and B of the DPCM memory **130** are capable of being read essentially simultaneously.

Memories **124** and **130** are addressed in parallel by an address generator **120** with auto-increment capability. The address bus to DP memory **124** carries 2 addresses, and the address bus to DPCM memory **130** carries **2** addresses. The address generator **120** is responsive to address data from the I/O state machine **104**, and to instruction information from the decoder **112**.

Fast motion estimation is facilitated by the two funnel shifters **140** and **144**. Shifter **140** receives the 16 pixel output from port A of the DPCM memory **130**, and shifter **144** receives the 16 pixel output from port B of the DPCM memory **130**.

The DPCM memory **130** and the shifters **140** and **144** act in conjunction to provide a particularly advantageous type of memory, a pixel-group random access memory ("PRAM") element **131**. Memory element **131** has 36 addressable locations of 40 pixels each, and provides on each output port any eight contiguous pixels from any of the addressable locations. Generally, if N is the number of pixels furnished on an output port, the memory element **131** has a number of addressable locations of a size greater than N, and is able to select any N contiguous pixels from any of the addressable locations for output on the output port. This feature is particularly advantageous in full pixel motion estimation because the 256 possible full pixel search blocks are scattered in the DPCM memory **130**, and is also advantageous in half- and quarter- pixel interpolation in which the sizes of the principal blocks such as, for example, the X block **70**, the A block **72**, the B block **74**, and the C block **76**, are not constrained to a uniform 16×16 pixel size.

The flexibility afforded by PRAM addressing of the PRAM memory **130** makes possible minimizing I/O DMA transfers as new search windows are loaded into the DPCM memory **130**. In the architecture **100**, often only a part of the search window confined to two banks of the DPCM memory **130** is obsolete. In such cases, a new search window is created merely by overwriting with new pixel data the two banks of the DPCM memory **130** containing the obsolete pixel data. Note, however, that a search window assembled in this way does not have a static structure in the DPCM memory **130**. PRAM addressing of the DPCM memory **130** under program control provides the flexibility required to make effective use of the dynamically varying search window structure in the DPCM memory **130**.

Pixel and word arithmetic processing is provided by the ALU **154**, which receives pixel data items from shifters **140** and **144** through multiplexer **154**. The ALU **154** is used for absolute difference operations and half-pixel interpolations of the motion estimation. Receiving operandi A and B, the ALU **154** on one output denoted "|A−B|" the absolute value of A−B, and on the other output denoted "X" a value depending on the mode of operation: the value A+B in sum mode, the value A−B in difference mode, and the value (A+B)/2 in averaging mode.

For half-pixel interpolations and some quarter pixel interpolations, the multiplexer **152** is placed in ONE mode to select 8 pixels from, for example, the A port of the DPCM memory **130** through the shifter **140** as one-half the B operand (the least significant pixels, for example), and 8 pixels from, for example, the B port of the DPCM memory **130** through the shifter **144** as one-half of the A operand (the least significant pixels, for example). The most significant pixels of the operandi A and B are "don't care." The ALU **154** is placed in averaging mode, and the eight least significant pixels at the X output of the ALU **154** representing (A+B)/2 are written into appropriate addressable locations of DPCM memory **130** through multiplexer **128**. The eight most significant pixels are not used.

For some quarter pixel interpolations using an intermediate interpolation and the prediction error calculation using the P block **80**, the multiplexer **152** is placed in ZERO mode to select 16 pixels from, for example, the B port of the DP memory **124** as one-half the B operand (8 pixels are "don't care"), and 16 pixels from, for example, the B port of the DPCM memory **130** as one-half of the A operand (8 pixels are "don't care"). The ALU **154** is placed in difference mode, and the eight least significant pixels of the X output representing the quantity A−B are written into appropriate addressable locations of DPCM memory **130** through multiplexer **128** for quarter pixel interpolation, and into appropriate addressable locations of the DP memory **124** through multiplexer **122** for the prediction error. The eight most significant pixels are not used.

For determining a sum of absolute differences, the 16 pixel absolute difference output |A−B| is applied to tree adder **156**. The result is furnished to controller **102**, which uses the result to determine which of a plurality of motion vectors is minimum.

The inputs of the memories **124** and **130** are selectable. DP memory **124** receives two or eight pixel data items at each write enable, depending on the state of multiplexer **122**. DPCM memory **130** receives two or eight pixel data items at each write enable, depending on the state of multiplexer **128**.

Direct outputs to the I/O state machine **104** and the controller **102** are provided for from the DP memory **124** and the ALU **154**. Multiplexer **126** selects two pixels from either the 8 pixel output from port B of the DP memory **124** or the 8 least significant pixels of the output of the ALU **154** for input to the controller **102** and the I/O state machine **104** over the bus **103**, since the bus **103** is only two pixels wide as shown in FIG. **2**.

Addressing

The address generator **120**, illustrated in greater detail in FIG. **8**, generates addresses for the DP memory **124** and the DPCM memory **130**. The various functional elements of the address generator **120** are controlled by microcode through the decoder **112** (FIG. **2**).

The DPCM memory is a three ported memory having read ports A and B and write port W. These ports have corresponding preloadable registers **214**, **224**, and **244** in the section **120***a* of the address generator **120** shown in FIG. **8**, which are writable by the controller **102** over lines REBUS [**11**:**3**] (reduced instruction set controller engine bus) of bus **105**. Specifically, register **214** is loaded by latching REBUS [**11**:**3**] with latch **210** when multiplexer **212** is set to select the output of the latch **210**. Similarly, register **224** is loaded by latching REBUS [**11**:**3**] with latch **220** when multiplexer **222** is set to select the output of the latch **210**; and register **244** is loaded by latching REBUS [**11**:**3**] with latch **240** when multiplexer **242** is set to select the output of the latch **240**. Alternatively, in autoincrement mode, registers **214**, **224** and **244** are loaded through multiplexers **212**, **222** and **242** respectively, from the outputs of multiplexers **218**, **228** and **248** respectively. Alternatively, registers **224** and **244** are loaded through multiplexers **222** and **242** respectively, with the data item DI2 being supplied by external command on CBUS. Note that the path through register **214** is a 9-bit path, while the paths through registers **224** and **244** are 11-bit paths.

Adders **216**, **226** and **246** increment the contents of, respectively, registers **214**, **224** and **244** with the data item DI1. Data item DI1 is a 3-bit value controlled by the mode register bits [**1**:**0**] in the 16 bit microcode supplied to the decoder **112**, as follows: bit [**2**] is true when MODE[**1**]× MODE[**0**] is true, and otherwise false; bit [**1**] is true when MODE[**1**] is true, and otherwise false; and bit [**0**] is true when MODE[**1**]+MODE[**0**] is true, and otherwise false. In certain datapath operations such as interpolations, the three port addresses are incremented simultaneously by the same increment amount. Since adders **226** and **246** are in an 11-bit path, the 3-bit data item DI1 is supplemented with logical ONES at the two least significant bit positions. Moreover, adders **226** and **246** controllably increment the outputs of, respectively, registers **224** and **244** with the 5-bit data item DI3. With multiplexer **219** set to select the output of multiplexer **218**, the read address DMADRA [**11**:**3**] is either the value of the register **214** or the incremented value of register **214**, depending on the state of multiplexer **218**. With multiplexer **229** set to select the output of multiplexer **228**, the read address DMADRB [**11**:**3**] is either the value of the register **224** or the incremented value of register **224**, depending on the state of multiplexer **228**. The nine most significant bits of the output of multiplexer **228** are routed to the input of multiplexer **229**. With multiplexers **219** and **229** set to select the output of multiplexer **248**, write. addresses DMADRA [**11**:**3**] and DMADRB [**11**:**3**] are the value of the nine most significant bits of the register **244**.

The six bit output of register **234** is furnished to the shifters **140** and **144** as DMADRA [**2**:**0**] and DMADRB [**2**:**0**] for PRAM addressing. Register **234** is selectively loaded with the value of REBUS [**2**:**0**] latched by latches **230** and **231**, or with its current value, depending on the state of multiplexer **232**.

Hence, it will be appreciated that the full address DMADRA [**11**:**0**] and DMADRB [**11**:**0**] is applied to the memory element **131** for PRAM addressing.

The DP memory **124** is also a three ported memory having read ports A and B and write port W. The section (not shown) of the address generator **120** provided to address DP memory **124** is similar to the section **120***a,* except for a few notable differences. The path through the register corresponding to register **214** is seven bits rather than 9 bits, and is loaded through REBUS [**6**:**0**]. The paths through the registers corresponding to registers **224** and **244** are nine bits rather than eleven bits, and are loaded through REBUS [**6**:**0**]. Data item DI1 differs from data item DI1 of the section **120***a* in that its 3 bits are controlled by the mode register bits [**3**:**2**] in the 16 bit microcode supplied to the decoder **112**, as follows: bit [**2**] is true when MODE[**3**]×MODE[**2**] is true, and otherwise false; bit [**1**] is true when MODE[**3**] is true, and otherwise false; and bit [**0**] is true when MODE[**3**]+ MODE[**2**] is true, and otherwise false. Data item DI3 is generally the same as data item DI3 of the section **120**A. Data item DI2 is generally the same, except that it is nine rather that eleven bits. The outputs to DP memory **124** are DPADRA [**6**:**0**] and DPADRB [**6**:**0**].

Datapath Elements

An illustrative DPCM memory **130** is shown in FIG. **9** and FIG. **10**. DPCM memory **130** is configured with five banks **130.4–130.0** (FIG. **7**) of, for example, 36×64 bit conventional SRAM memory designed to support two reads from different array addresses within the same cycle. Writes are supported through write port W (and its complement W-bar) when the port A and port B addresses are equal. The schematic illustration of FIG. **10** shows a one bit slice **320** of the DPCM memory **130**. The sixty-third bit columns of the five banks **130.4–130.0** are represented by bit columns **330.4–330.0**, respectively. Word line **332**, which is associated with the left or "A" port of the memory **130**, is asserted by the X decoder **302** for port A to read five 64-bit pixel groups **340**, **342**, **344**, **346** and **348** onto the bus **349**. In FIG. **10**, which shows only a single slice, bit [**63**] of each of the pixel groups **340**, **342**, **344**, **346** and **348** are placed on the bus **349** as bits L[**4**], L[**3**], L[**2**], L[1] and L[**0**]. Similarly, word line **334**, which is associated with the right or "B" port of the banks **330.4–330.0**, is asserted by the X decoder **304** for port B to read five 64-bit pixel groups **350**, **352**, **354**, **356** and **358** onto the bus **359**. In FIG. **10**, which shows only a single slice, bit [**63**] of each of the pixel groups **350**, **352**, **354**, **356** and **358** are placed on the bus **359** as bits R[**4**], R[**3**], R[**2**], R[1] and R[**0**].

Bus **349** routes the selected left side pixel groups to two 5:1 multiplexers indicated generally at **360** and **362** in FIG. **10**B, both of which are driven by the Y select decoder **306** for port A. Multiplexers **360** and **362** include five MOSFET transistors, with their gates respectively driven by YSEL_A [**4**:**0**], their drains connected to the appropriate bit lines of bus **349**, and their sources connected to the appropriate bit lines of port A. Multiplexer **360** selects the current pixel group addressed by X decoder **302** and Y decoder **306**, as bits L[**4**], L[**3**], L[**2**], L[**1**] and L[**0**] are connected respectively to ports **4**, **3**, **2**, **1** and **0**. At the same time, multiplexer **362** selects the adjacent pixel group from the next bank to the left, as bits L[**0**], L[**4**], L[**3**], L[**2**] and L[1] are connected respectively to ports **4**, **3**, **2**, **1** and **0**. Bit [**63**] of the pixel group selected by multiplexer **360** is placed on bit line [**63**] of the port A bus, while bit [**63**] of the adjacent pixel group selected by multiplexer **362** is placed on bit line [**127**] of the port A bus.

Similarly, bus **359** routes the selected right side pixel groups to two 5:1 multiplexers indicated generally at **364** and **366** of FIG. **10**B, both of which are driven by the Y select decoder **308** for port B. Multiplexers **364** and **366** include five MOSFET transistors, with their gates respectively driven by YSEL_B [**4**:**0**], their sources connected to the appropriate bit lines of bus **359**, and their drains connected to the appropriate bit lines of port B. Multiplexer **364** selects the current pixel group addressed by X decoder **304** and Y decoder **308**, as bits R[**4**], R[**3**], R[**2**], R[**1**] and R[**0**] are connected respectively to ports **4**, **3**, **2**, **1** and **0**. At the same time, multiplexer **366** selects the adjacent pixel group from the next bank to the left, as bits R[**0**], R[**4**], R[**3**], R[**2**] and R[1] are connected respectively to ports **4**, **3**, **2**, **1** and **0**. Bit [**63**] of the pixel group selected by multiplexer **364** is placed on bit line [**63**] of the port B bus, while bit [**63**] of the adjacent pixel group selected by multiplexer **366** is placed on bit line [**127**] of the port B bus.

The memory **330** includes SRAM memory cells, precharge amplifiers, sense amplifiers, bias drivers, decoders, and latches (not shown), suitable circuits for which generally are well known in the art. The DPCM memory **130** also includes write buffer enable circuit **310** and timer circuit **312**, suitable circuits for which are generally well known in the art. Terminal CLK is connected to the clock signal CLKDM.

The DPCM memory **130** is addressed by address generator **120** over two 12 bit address buses carrying, respectively, port A address DMADRA [**11**:**3**] and port B address DMADRB [**11**:**3**]. Note that for a memory write, the port A address and the port B address are set equal. The address fields from address generator **120** carried on the two 12 bit address buses DMADRA and DMADRB are as follows. DMADR [**10**:**5**] addresses one of the 36 pages of memory.

The low order addresses selected pages at the top of the memory, and the high order addresses select pages at the bottom of the memory. Upon access, 5×64 bits of data are selected. DMADR [**11**,**4**,**3**] addresses one of the five banks of the page previously selected by DMADR [**10**:**5**]:[**000**] selects bank **0**, [**001**] selects bank **1**, [**010**] selects bank **2**, [**011**] selects bank **3**, and [**100**] selects bank **4**. DMADR [**2**:**0**] selects any pixel, which serves as the beginning pixel of a 64 bit data stream containing eight consecutive pixels, from zero to seven, left to right. Known as PRAM addressing, this addressing is described more fully in the context of the illustrative shifter **400**, below. The write port W is addressable only by ADDR [**11**:**1**], so that while PRAM addressing is not provided on write port W, a write in 16 or 64 bit segments is supported.

The DPCM memory **130** is addressable in two ways. Datapath access to the DPCM memory **130** is supported as 128-bit reads from port A and port B, and a 16 or 64 bit write to port W. I/O access to DPCM memory **130** is a 16 bit read from port B through shifter **144**, ALU **154** in pass through mode, and multiplexer **126**; and a 16 bit write to port W. During an I/O read or write, the beginning address is formed by setting address bit [**11**:**1**] as the beginning address.

An illustrative funnel shifter and transposer **404** suitable for use as shifters **140** and **144** is shown in FIG. **11**. The input of the illustrative funnel shifter and transposer **404** is 128-bits, arranged as 16 pixels from either port A or port B of the DPCM memory **130**. The 64 most significant bits are denoted the left input IN_L [**63**:**0**]. The left side input is further separated into pixels IN_L [**63**:**56**], IN_L [**55**:**48**], IN_L [**47**:**40**], IN_L [**39**:**32**], IN_L [**31**:**24**], IN_L [**23**:**16**], IN_L [**15**:**8**], and IN_L [**7**:**0**], denoted P, **0**, N, M, L, K, J and I respectively. The 64 least significant bits are denoted the right input IN_R [**63**:**0**]. The right side input is further separated into pixels IN_R [**63**:**56**], IN_R [**55**:**48**], IN_R [**47**:**40**], IN_R [**39**:**32**], IN_R [**31**:**24**], IN_R [**23**:**16**], IN_R [**15**:**8**], and IN_R [**7**:**0**], denoted A, B, C, D, E, F, G and H respectively. The left and right side pixels are applied to eight **12**:**1** multiplexers **406**, **408**, **410**, **412**, **414**, **416**, **418** and **420** in the order shown in FIGS. **11**B–**11**E. The select inputs of the multiplexers **406**, **408**, **410**, **412**, **414**, **416**, **418** and **420** are connected to the output of a decoder **405**, which decodes the address segment DMADR [**2**:**0**]. This arrangement supports PRAM addressing and transposition.

PRAM addressing is done with the arrangement of FIGS. **11**A–**11**D in conjunction with the DPCM memory **130**. PRAM addressing, which is useful for implementing motion estimation algorithms, involves the selective shifting from zero to seven pixels to the left on a pixel boundary in accordance with a segment of the address for the DPCM memory **130**. The left input IN_L[**63**:**0**] and the right input IN_R[**63**:**0**] are applied to the funnel shifter network **404**. The address segment DMADR [**2**:**0**] selects any pixel to be the beginning pixel of a 64 bit data stream containing eight consecutive pixels, from zero tc seven, left to right. Table 1 following lists the output FS[**63**:**0**] as obtained from the input IN_L[**63**:**0**] and IN_R[**63**:**0**] in terms of pixels A–P.

TABLE 1

MUX SELECT	DATA OUT	COMMENT
0	P O N M L K J I	Pass Through Mode
1	O N M L K J I A	Shift Left 1
2	N M L K J I A B	Shift Left 2
3	M L K J I A B C	Shift Left 3
4	L K J I A B C D	Shift Left 4

TABLE 1-continued

MUX SELECT	DATA OUT	COMMENT
5	K J I A B C D E	Shift Left 5
6	J I A B C D E F	Shift Left 6
7	I A B C D E F G	Shift Left 7

FIG. **12** is a pictorial representation useful in explaining the particular implementation of PRAM addressing by the DPCM memory **130** in conjunction with the shifters **140** and **144**. In order to read the pixel groups **652** and **654**, a port A address **660** and a port B address **662** are furnished to the DPCM memory **130**. In FIG. **12**, the port A and port B addresses are different, although they. could in some operations be the same address. Banks **650**.**2** and **650**.**1** are read from port A of DPCM memory **130** as a **2**N data item **656**, while banks **650**.**4** and **650**.**3** are read from port B of DPCM memory **130** as a **2**N data item **658**. In FIG. **12**, port A and port B receive data from different banks, although they could in some operations receive data from the same banks or from an overlapping bank.

The N pixel data item **652** is extracted from the 2N data item **656** in shifter **140**, while the N pixel data item **654** is extracted from the 2N data item **658** in shifter **144**. Data items **652** and **654** are combined as a 16 pixel data item and furnished to the ALU **154**.

The illustrative funnel shifter **404** is also capable of performing transposition operations. Transposition is not used in motion estimation and the circuit elements for performing transposition may be omitted from the shifters **140** and **144**. Nevertheless, transposition is useful in the first half of a parallel two dimensional discrete cosine transform operation, prior to performing the second half of a DCT operation in a vision processor. The use of the illustrative shifter **404** with the transposition circuit elements in such a vision processor allows the same circuit wiring to be shared, thereby saving chip area.

In a transposition operation, the 128-bit or eight 16-bit word data, which as shown in FIGS. **4** and **8** is the output from the RF memory **134**, the circuit **404** is responsive to the address segment DMADR [**2**:**0**] and the mode signal XPOS_ON, which are applied to the select inputs of the multiplexers **406**, **408**, **410**, **412**, **414**, **416**, **418** and **420** through the decoder **405**, in accordance with Table 2 following.

TABLE 2

MUX SELECT	DATA OUT	COMMENT
8	P O N M L K J I	WXYZ Pass Through Mode
9	N M A B J I E F	XWZY
10	L K J I A B C D	YZWX
11	J I L K C D A B	ZYXW

The DP memory **124** illustrated in FIG. **13** is basically similar to the DPCM memory **130**, but lacks PRAM addressing capability. The SRAM memory array **446** is designed to support two reads from different array locations in the same cycle. The SRAM memory **446** includes suitable memory cells, precharge circuits, sense amplifiers, bias drivers, decoders, and latches similar to those used in the DPCM memory **130**. The DP memory **124** also includes write buffer enable circuit **440** and timer circuit **442**, suitable circuits for which are generally well known in the art.

Some notable differences do exist, however. Memory array **446** is configured with four banks of 32×64 bit SRAM

memory. The DP memory **124** is addressed by address generator **120** over two 7 bit address buses carrying, respectively, port A address DPADRA [**6**:**0**] and port B address DPADRB [**6**:**0**]. The address fields from address generator **120** carried on the two 7 bit address buses are as follows. ADDR [**6**:**2**] addresses one of the 32 pages of memory. The low order addresses selected pages at the top of the memory, and the high order addresses select pages at the bottom of the memory. Upon access, 4×64 bits of data are selected. DPADR [**1**:**0**] addresses one of the four banks of the page previously selected by DPADR [**6**:**2**]:[**00**] selects bank **0**, [**01**] selects bank **1**, [**10**] selects bank **2**, and [**11**] selects bank **3**.

The DP memory **124** is accessible in two ways. Datapath access to DP memory **124** is 64 bit (8 pixel) reads from port A and port B, and a 64 bit (8 pixel) write to port W. I/O access to DP memory **124** is a 16 bit (2 pixel) read from port B through multiplexer **126** (FIG. **2**), and a 16 bit (2 pixel) write to port W. During an I/O read or write, the beginning address is formed by appending two more bits to the least significant position of address [**6**:**0**], which bits are applied to the multiplexer **126**. Left to right position of 64 bit data is addressed as **00**, **01**, **10**, **11** in 16 bit chunks by these additional appended bits.

An illustrative ALU **154** is illustrated in FIG. **14**. Generally, ALU **154** performs addition, subtraction or averaging of two operandi A and B in one cycle. The addition is performed to either 16 or 8 bit precision, depending on whether the operandi consist of sixteen eight-bit data items (pixels), or eight sixteen-bit data items (words). The ALU **154** is laid out as two similar 8-pixel or 4-word ALU sections **154.1** and **154.2**, which are essentially identical. Each of the ALU sections **154.1** and **154.2** comprises four essentially identical configurable ALU units; as shown in FIG. **14**, ALU section **154.1** comprises ALU units **500.1**, **500.2**, **500.3** and **500.4**. The units **500** are substantially identical to one another; a representative unit **500.1** is shown in detail.

The unit **500.1** comprises two arithmetic units **510** and **520**. The arithmetic unit **510** comprises a full adder **512** for determining a sum of the pixels A[**7**:**0**] and B[**7**:**0**], and a full subtractor **514** for determining a difference of the pixels A[**7**:**0**] and B[**7**:**0**] and the difference plus one. The difference plus one output of the subtractor **514** is inverted by inverter **517**, and applied along with the difference output to the multiplexer **518**. Either the difference or the inverted difference plus one is selected in accordance with the sign bit on the difference output of the subtractor **514**, and the selected quantity is provided as the absolute difference output |A−B|[**7**:**0**]. The output of the adder **512** is furnished to circuit **515**, which is a shifter that operates either as a pass through circuit or as a divide by two circuit depending on the state of the averaging mode signal A_MODE. The output of the circuit **515** is applied along with the (A−B) output of the subtractor **514** as inputs to multiplexer **516**, which selects one of the inputs in accordance with the state of the sum/difference mode signal S/D_MODE. Hence, output X furnishes either (A+B)[**7**:**0**], (A−B) [**7**:**0**], or (A+B)/2[**7**:**0**]. Suitable circuits for the various adders, multiplexers and shifters of FIG. **14** are generally well known in the art.

The elements of arithmetic unit **520** are analogous to the elements of the arithmetic unit **510**, except that the adder **522** of the arithmetic unit **520** receives through multiplexer **530** an input from the carry out of the adder **512** in the arithmetic unit **510**, and the subtractor **524** of the arithmetic unit **520** receives through multiplexer **532** an input from the carry out of the subtractor **514** in the arithmetic unit **510**. In pixel mode, each of the arithmetic units **510** and **520** operate independently. Multiplexers **530** and **532** are responsive to the state of the pixel/word mode bit P/W_MODE to select a logic ZERO for application as the carry to the full adder **522** and the full subtractor **524**. In word mode, the arithmetic units **510** and **520** are linked. Multiplexers **530** and **532** are responsive to the state of the pixel/word mode bit P/W_MODE to select the carry output of the full adder **512** for application to the carry input of the full adder **522**, and to select the carry output of the full subtractor **514** for application to the carry input of the full subtractor **524**.

The outputs of the arithmetic sections **510** and **520** are combined to furnish outputs X[**15**:**0**] and |A−B|[**15**:**0**] of the ALU unit **500.1** (outputs (A+B)[**15**:**0**] and (A−B)[**15**:**0**] are not utilized in motion estimation). The outputs of all ALU units in the sections **154.1** and **154.2** are combined to furnish outputs X[**127**:**0**] and |A−B|[**127**:**0**] of the ALU **154** (outputs (A+B)[**127**:**0**] and (A−B)[**127**:**0**] are not utilized in motion estimation).

Another mode supported by the ALU **154** is a pass through mode. The pass through mode essentially sets operand B to zero so that the operand A is unaffected by any arithmetic operations. Pass-through mode is implemented in the ALU unit **500.1** with AND gates **511** and **521**, which are responsive to the pass-through mode bit PT_MODE, in the bit lines B[**7**:**0**] and B[**15**:**8**].

The tree adder **156** (FIG. **2**) is used to perform the summation of the difference of 16 pixels at one time received from ALU **154**. Tree adders are well known in the art. The output of the tree adder **156** is read by the controller **102** and stored in register RR**24**.

While the invention has been described with respect to the embodiments set forth above, other embodiments and variations not described herein may be within the scope of the invention. For example, the invention is advantageous fabricated with any suitable 1 micron CMOS process, although it is not to be considered limited to any particular fabrication technology. Generally, the present invention in its broadest terms is not to be considered limited to any particular memory size, bank arrangement, pixel size, word size, or pixel group size, as specific values depend on the characteristics desired of the architecture. Accordingly, other embodiments, variations and improvements not described herein may be within the scope of the invention, which is defined by the following claims.

What is claimed is:

1. A method for determining a prediction error in motion estimation following the identification of a best match lock, comprising the steps of:

storing an image block in a first memory having a plurality of addressable locations N pixels in width;

selecting N pixels in parallel from any one of said addressable locations of said first memory during an address cycle;

storing said best match block in a second memory having a plurality of addressable locations M pixels in width, M being greater than N;

selecting any N contiguous pixels in parallel from any of said addressable locations of said second memory corresponding to said best match block during an address cycle;

determining differences of the N pixels from said first memory selecting step and the N pixels from said second memory selecting step; and

storing the results of said differences determining step.

2. A method as in claim **1**, wherein said second memory comprises a memory array having a plurality of addressable

locations N pixels in width, second memory selecting step comprises the steps of: selecting N pixels in parallel from any one of said addressable locations of said memory array corresponding to the selected search block during an address cycle; selecting N pixels in parallel from an adjacent addressable location of said memory array corresponding to the selected block during an address cycle, 2*N contiguous pixels thereby being selected; and selecting N contiguous pixels of the 2*N contiguous pixels selected in said first-mentioned pixel selecting step and said second-mentioned pixel selecting step.

3. A method for selectively updating pixel information in a memory and thereafter selectively accessing surviving old pixel information and new pixel information contained therein, comprising the steps of:

arranging pixel information in a plurality of banks, each bank having a plurality of addressable locations and each addressable location containing a pixel group, adjacent pixel groups being pixel groups of adjacent banks having the same addressable location and pixel groups of adjacent banks having adjacent address locations;

overwriting at least one of said banks of pixel information with new pixel information;

selecting pixel group from one of said banks in accordance with a specified addressable location;

selecting an adjacent pixel group; and

selecting a subset of contiguous pixels from the selected pixel group and from the selected adjacent pixel group.

4. A method as in claim **3**, wherein: said arranging step comprises the step of arranging pixel information in five banks, each bank having an equal number of addressable locations and containing pixel groups of equal size; said overwriting step comprises the step of overwriting two adjacent banks; and said subset selecting step comprises the step of selecting a number of contiguous pixels equal to the size of said pixel groups.

5. An apparatus for performing a variety of operations relating to motion estimation, including pixel differences, sum of absolute pixel differences, and pixel averaging, comprising:

a first memory having a plurality of addressable locations, a first write port, and first and second read ports, wherein N pixels from any one of said addressable locations are accessible in parallel on each of said first and second read ports during an address cycle;

a second memory having a plurality of addressable locations greater than N pixels in width, a second write port, and third and fourth second memory read ports, wherein any N contiguous pixels from any one of said addressable locations are accessible in parallel on each of said third and fourth read ports during an address cycle, and the second memory having:

a memory array having a plurality of addressable locations N pixels in width and fifth and sixth read ports, wherein N pixels from any one of said addressable locations and N pixels from an adjacent addressable location are accessible in parallel on each of said fifth and sixth read ports during an address cycle,

a first shifter having an input coupled to said fifth read port and an out put N pixels in width, the output of said first shifter being said fifth read port, and

a second shifter having an input coupled to said sixth read port and an output N pixels in width, the output of said second shifter being said sixth read port; and

a first multiplexer having one input coupled to said first and second read ports, another input coupled to said third read port, and an output;

a second multiplexer having one input coupled to said third and fourth read ports, another input coupled to said fourth read port, and an output;

an arithmetic unit having a first operand input coupled to the output of said first multiplexer, a second operand input coupled to the output of said second multiplexer, a first output for furnishing the absolute value of a difference between said first and second operandi, and a second output for selectively furnishing one of a difference between said first and second operandi, and an average of said first and second operandi, and an average of said first and second operandi; and

an adder coupled to the first output of said arithmetic unit; wherein the second output of said arithmetic unit is routed to said first and second inputs.

6. A method for motion estimation, comprising the steps of:

storing an image block in a first memory having a plurality of addressable locations N pixels in width;

selecting N pixels in parallel during an address cycle from any one of said addressable locations of said first memory;

storing a search window in a second memory having a plurality of addressable locations M pixels in width, M being greater than N;

selecting a search block within said search window, including skipping every I search blocks, wherein I is any positive integer;

selecting any N contiguous pixels in parallel during an address cycle from any one of best match said addressable locations of said second memory corresponding to the search block from said search block selecting step;

determining a sum of absolute differences of the N pixels from said first memory selecting step and the N pixels from said second memory selecting step;

accumulating the results of said sum of absolute differences determining step;

repeating said first memory selecting step, said second memory selecting step, said sum of absolute difference determining step, and said accumulating step for all pixels in the search block from said search block selecting step to obtain a first sum of absolute differences;

repeating said search block selecting step, said first memory selecting step, said second memory selecting step, said sum of absolute differences determining step, and said accumulating step for all pixels in the search block from said repeated search block selecting step to obtain a second sum of absolute differences;

identifying the lesser of said first sum of absolute differences and said second sum of absolute differences; and

selecting one of the search blocks from said search block relating step as a best match block based on said identifying step.

* * * * *

UNITED STATES PATENT AND TRADEMARK OFFICE

CERTIFICATE OF CORRECTION

PATENT NO. : 5,901,248

DATED : May 4, 1999

INVENTOR(S) : FANDRIANTO et al.

It is certified that error appears in the above-identified patent and that said Letters Patent is hereby corrected as shown below:

Col. 4, line 10: "an" should read --a--.

Col. 4, line 46: "compare" should read --compared--.

Col. 4, line 48: "not.shown" should read --not shown--.

Col. 6, line 4: "thorough $X_{17,17}$" should read --$X_{17,0}$ through $X_{17,17}$--.

Col. 9, line 22: "$I1_{9,8}$–$I19_{,15}$" should read --$I1_{9,8}$–$I1_{9,15}$ --.

Col. 17, line 56: "tc" should read --to--.

Col. 21, line 63: "out put" should read --output--.

Col. 22, lines 13 and 14: "and an average of said first and second operandi, and an average of said first and second operandi;" should read --and an average of said first and second operandi;--.

Signed and Sealed this

Tenth Day of April, 2001

Attest:

Nicholas P. Godici

NICHOLAS P. GODICI

Attesting Officer

Acting Director of the United States Patent and Trademark Office