BADGER TRUCK REFRIGERATION INC.

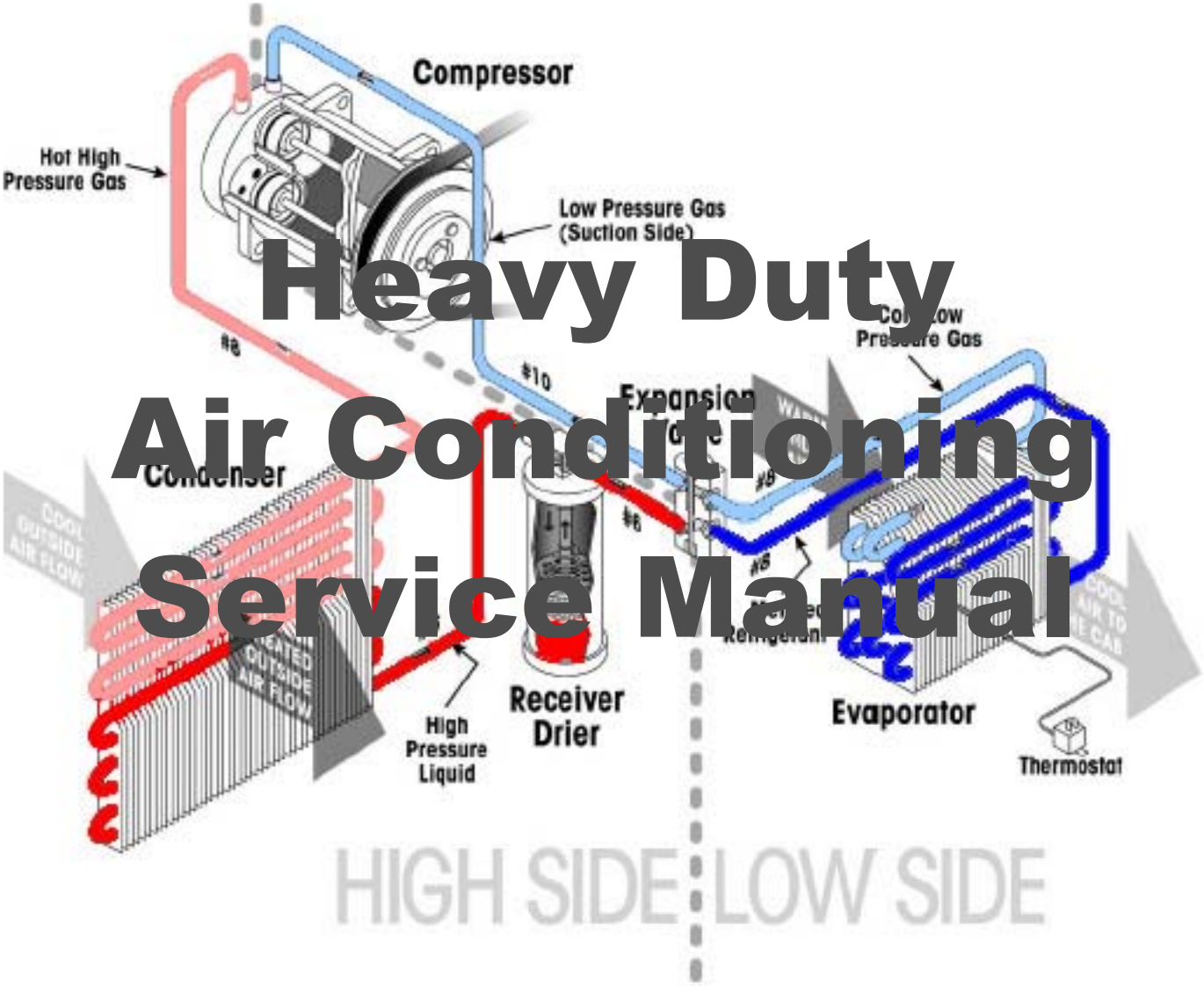

Heavy Duty Air Conditioning Service Manual

Safety Precautions & Warnings

Servicing Refrigerant Systems

1. Always wear the proper protective eyewear and clothing before working on any refrigeration system. Remember, refrigerant in the air conditioning system can reach pressures of over 500 PSI – if one of those lines bursts while you're working on the system, it can cause serious injury. If refrigerant gets in your eye, it can freeze your eyeball, causing permanent damage or blindness.

2. Always wear work gloves whenever you're working with condensers or evaporators. The aluminum edges are sharp, and can cause serious cuts.

3. Always stay clear of the belts and fan blade, and be careful revving the engine on a car with a flex fan – damaged blades have been known to come flying off without a moment's warning.

4. Always use a DOT-approved tank for storing used and recycled refrigerants. Look for the Department of Transportation stamp: DOT 4BW or DOT 4BA.

5. Always provide plenty of ventilation when using any electrical testing, recycling or recovery equipment. Avoid breathing any refrigerant vapor, lubricant vapor or mist. Exposure to these (particularly PAG oil mist) may irritate your eyes, nose and throat.

6. Always follow the instructions for your recycling equipment; failure to follow those directions could end up causing personal injury or damaging your equipment. Never perform any maintenance or service on your recycling equipment while the unit is plugged in (unless directed to do so) or without first consulting with authorized service personnel. Removing internal fittings and filters can release pressurized refrigerant. Use care and always wear appropriate safety wear.

7. Never use compressed air to leak test or pressure test an R-134a system or R-134a service equipment. Under certain conditions, pressurized mixtures of R-134a and air can be combustible. Always follow the proper procedures to prevent any safety hazards. In addition, shop air injects moisture into the system, and a pressure surge could damage the evaporator.

8. Microprocessors and computers are susceptible to damage from electrostatic discharge. Always use a static strap when working with these components, and always take the necessary precautions to prevent damage to electronic components.

9. Most A/C service manuals indicate that R-12 turns into deadly phosgene gas when burned. Recent studies have shown that, while burning R-12 doesn't change it into phosgene gas, it does break down into carbonyl fluoride (COF_2), carbonyl chlorofluoride (COCIF) with traces of free chlorine (CI_2). And, while breathing these byproducts isn't as deadly as breathing phosgene gas, it still can be very harmful. In large enough concentrations, these byproducts can displace enough oxygen to cause asphyxiation.

10. To prevent cross contamination between refrigerants, verify that the A/C system has the correct label and unique service fittings designed for the refrigerant being used. If you're ever in doubt, check the system with a refrigerant identifier.

Table of Contents

Theory of Operation:

Heat Transfer

Change of State

Latent Heat

Boiling Temperature/Pressure Relationship

R12 vs R134a

Refrigerant Boiling Point/Pressure Relationship

Basic Air Conditioning System

Heat Transfer

How does an air conditioner make the air feel cooler?

To understand how an air conditioner works, first we have to look at some of the physical principles involved. Let's begin with heat and heat transfer:

Everything you see, touch, taste, smell or hear has a certain amount of heat. Heat is energy, and everything you'll run into has some heat. The only exception is at absolute zero, or -460° F. Since you aren't likely to run into anything quite that cold, let's assume that every object has a certain amount of heat.

When talking about heat transfer, there really isn't any such thing as "cold" – sure, an ice cube may *feel* cold to the touch, but actually it just has *less* heat than your hand…that's why it feels cold. It's hard to think of an ice cube having heat, but that's actually the case.

Now, just for a minute or so, hold the ice cube in your hand. What happens? To begin with, the ice cube begins to melt. Another thing you'll notice is your hand gets colder. And wetter. What does all that tell us?

That tells us the heat is transferring from your hand to the ice cube. This example makes it obvious because the greater the difference in temperature, the faster the heat transfer.

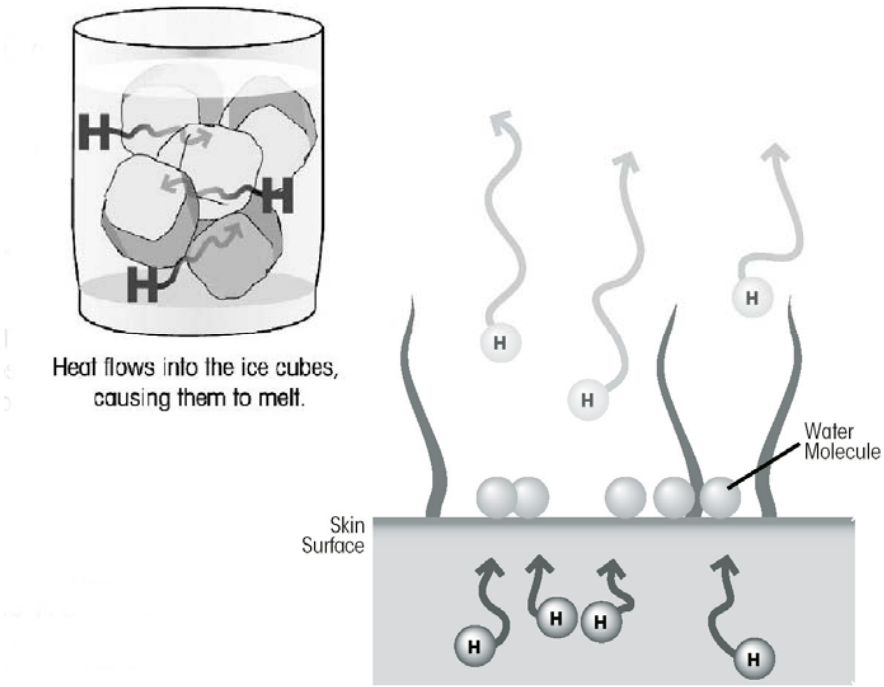

Heat always flows to cold until the temperatures equal

Basically, the *Second Law of Thermodynamics* says: Heat will always flow from a warmer object to a cooler one, until the temperatures become equal.

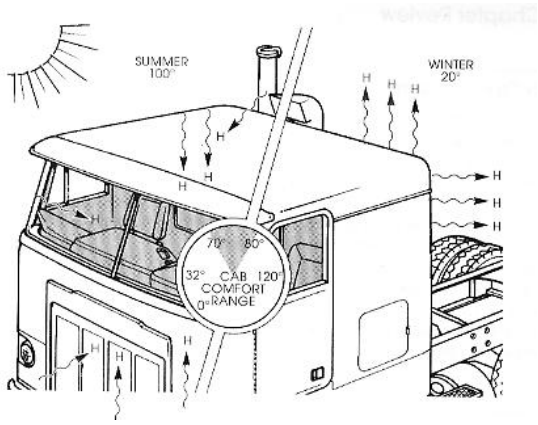

This drawing shows how heat moves; one of nature's laws. Heat always moves from a warm to a cool area – heat flows into the cab in hot weather and flows out in cold weather.

When you held the ice cube in your hand, the heat from your hand began to travel toward the ice cube. The ice cube absorbed heat, causing it to melt. As the heat traveled from your hand, your hand became colder; slowly, the temperature of the ice cube and your hand were trying to equalize. If the ice cube was large enough, and could absorb enough heat, eventually your hand and the ice cube would reach the same temperature.

That's the principle behind how an air conditioner cools the air in your machine: by flowing warm air over a cold evaporator, the heat from the air flows to the cold evaporator, making the air less hot. The heat from the air flows into the evaporator fins, and from there into the cold refrigerant. The refrigerant carries the heat away from the evaporator, cooling the evaporator so it can cool more air.

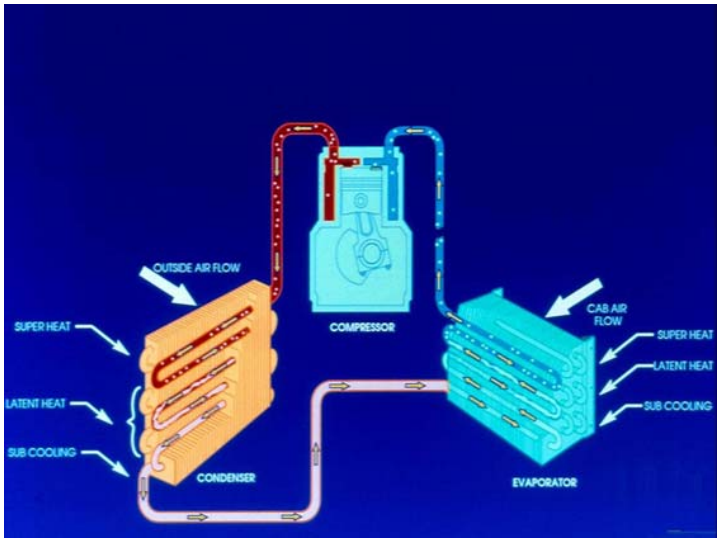

The evaporator absorbs heat while the condenser releases heat.

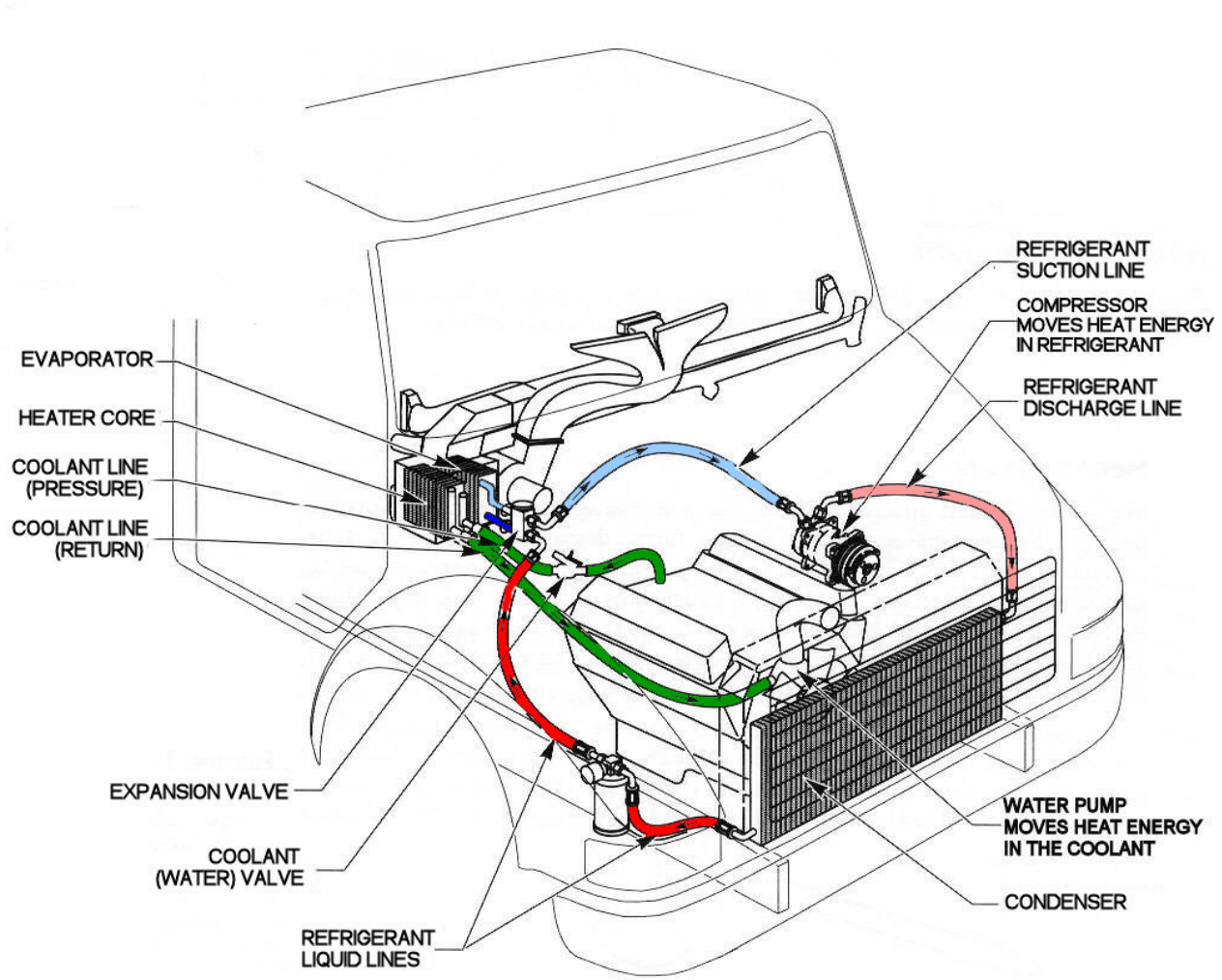

This picture shows the direction of refrigerant and engine coolant flow in the system. The air conditioner evaporator coil and condenser, and the heater core, are the main points of heat transfer.

Change of State

Heat transfer can force matter to change its state

All matter exists in three states: solid, liquid and gas. That's an important point to remember when looking at how an air conditioner works.

Remember what happened to your hand when you held onto the ice cube? Your hand became *colder*, but it also became *wetter* – the transfer of heat caused the ice cube to change its state from a solid to a liquid…that is, from ice to water.

That's one change that heat transfer can cause, but there's another change that we're going to be concerned with: the *change in state* when water goes from liquid to gas.

You're familiar with that change: if you continue to apply heat to water, eventually it begins to boil and turn to steam. But there's more going on than meets the eye.

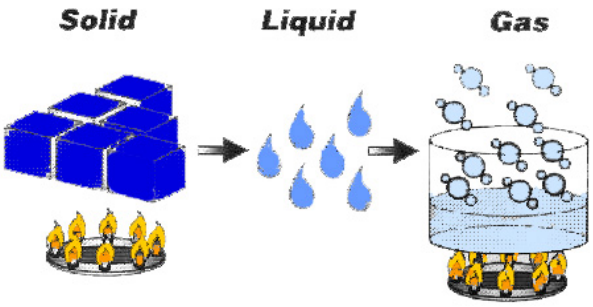

By applying enough heat, we can force an object to change its state, from a solid to a liquid…to a gas. The same is true in reverse: by removing enough heat, we can force an object to change states from a gas to a liquid…to a solid.

Latent Heat

It takes more heat to change water to steam than to boil water

To understand the heat necessary to force water to change states, we need to be able to measure the heat that water absorbs. Fortunately, someone already defined that for us. A *British Thermal Unit*, or *BTU*, is the amount of heat necessary to raise one pound of water one degree on the Fahrenheit scale at sea level. In other words, to increase the temperature of one pound of water from 100°F to 212°F (38°C to 100°C), you have to apply 112 BTUs of heat to the water. This is called "*Sensible Heat*" – as you apply heat, the temperature increases. But that still isn't enough heat to change that pound of water from a liquid to a gas. You'd have to apply an *additional 970 BTU*s of heat to change that pound of water into a pound of steam.

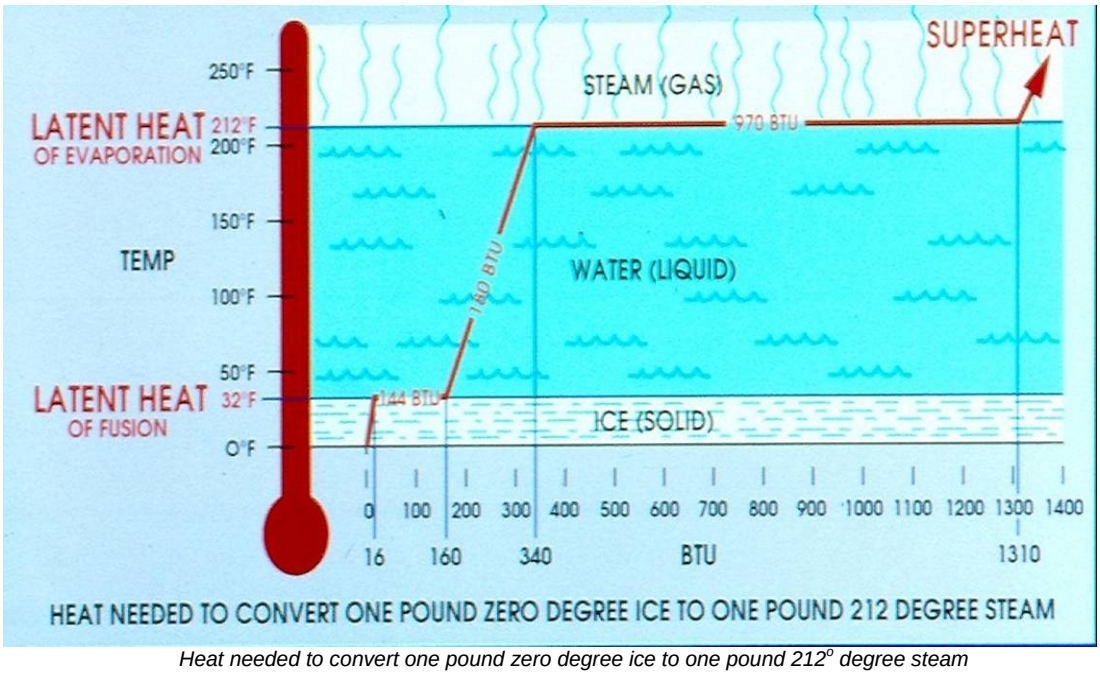

Heat needed to convert one pound zero degree ice to one pound 212° degree steam

The point to remember here is even though you added 970 BTUs to the water, the water temperature never went over 212°F (100°C). That 970 BTUs was the energy necessary to change the state of the water from a liquid to a gas (vapor). The extra heat being absorbed is known as *"The Latent Heat of Evaporation,"* or Latent Heat.

What about changing back from a vapor to a liquid? The principle's the same, but the heat flows in the opposite direction. For steam to change states back to a liquid, it must release 970 BTUs of heat. At this point, as long as the liquid doesn't release any more heat, the water will still be 212°F (100°C). The transfer of 970 BTUs simply allowed the water to condense back from a gas (vapor) to a liquid. This is *"The Latent Heat of Condensation."*

The Merriam-Webster Dictionary defines *latent* as: "Present, but not visible or active." The additional heat required for water to change states *is* present, but since the water temperature doesn't change, we say the heat is latent.

What all that means is a substance can absorb or release a lot of heat, without actually changing temperature itself, while changing states from a liquid to a gas, or from a gas to a liquid. As you'll soon see, these principles explain how the refrigerant in an air conditioning system can absorb and carry off heat.

But before we dive into the operation of a basic air conditioning system, there's one more set of rules we need to examine: the rules that define the relationship between pressure and boiling temperature.

Boiling Temperature/Pressure Relationship

Boiling temperature directly affected by pressure changes

Until now we've made a lot of blanket statements about the boiling temperature of water. We said it boils at 212°F, or 100°C. That's true…but *only at sea level.* If you set up camp at the top of a mountain, say, 5000 feet elevations, you'd find that water boils at a lower temperature. That's because atmospheric pressure's lower at 5000 feet than it is at sea level.

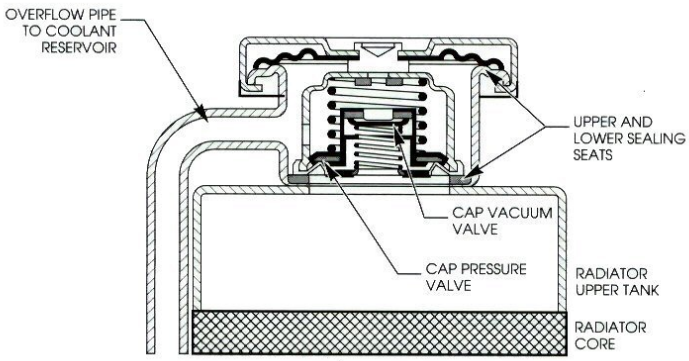

The pressure radiator cap seals the cooling system at the inlet on top of the radiator. Caps are pressure rated to match cooling system design. Each pound of pressure on the cooling system raises the boiling point of coolant three degrees Fahrenheit, so the pressure cap extends the cooling system operating range above the normal boiling point. The cap pressure valve opens when operating pressures are high. Coolant can flow through the heater core regardless of thermostat position.

The converse is also true: If you set up camp in Death Valley, you'd find water boils at a higher temperature than 212°F (100°C). Death Valley is below sea level, so atmospheric pressure's higher than at sea level.

Now, granted, the temperature difference we're talking about isn't very much – maybe a couple degrees…no more. But the pressure differences aren't all that great either. You're only talking about a couple of pounds difference in atmospheric pressure between Death Valley and Mount St. Helens.

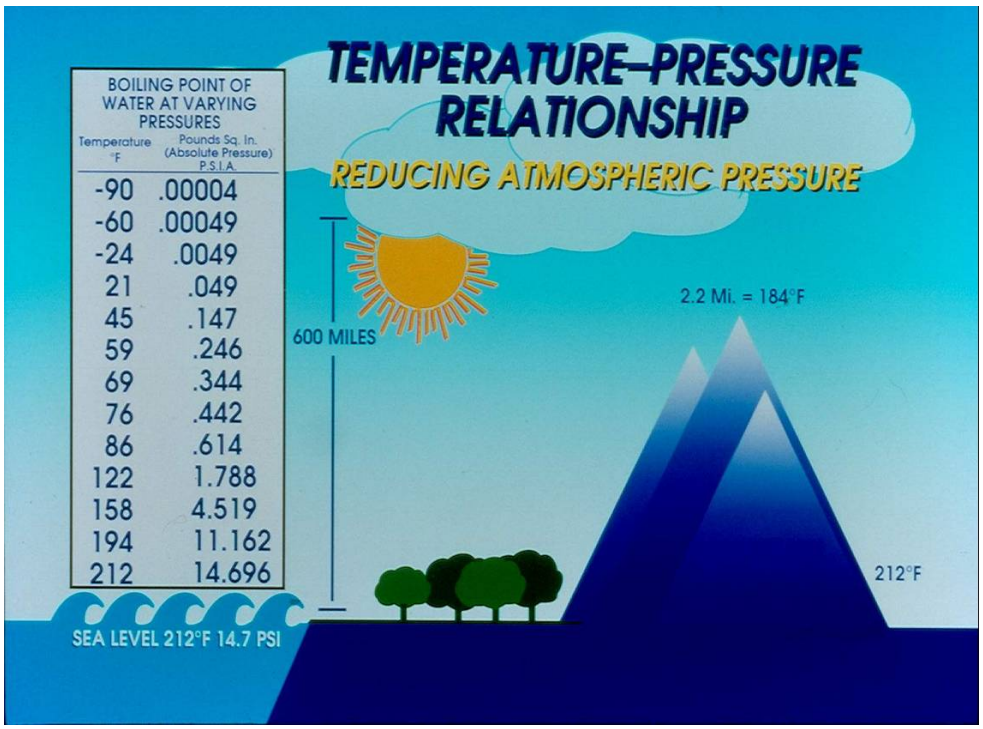

Water doesn't necessarily boil at 212°F, or 100° C - pressure affects boiling temperature. By increasing system pressure, boiling temperature increases.

But inside an air conditioning system we'll be working with pressure differences ranging from a high of 350 PSI (2400 kPa), down to as little as 30" vacuum. At 30" vacuum, water boils at less than -10°F (-23°C)!

So far we've looked at the principles of heat transfer as they apply to water, but these principles remain the same for all condensable fluids. To work in an air conditioning system, we need a fluid with boiling temperatures and pressures that are more manageable than water's.

Refrigerant Boiling Point/Pressure Relationship

Pressure changes affect the refrigerant temperature and boiling point…

That's how an air conditioning system works: The low side of the system maintains a fairly constant pressure designed to keep the evaporator temperature at about 32°F (0°C). Since the refrigerant is at its boiling temperature, it should take on heat and boil, changing state into a vapor.

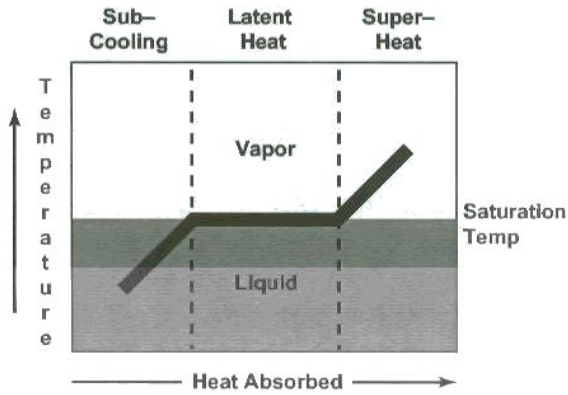

Latent heat is the heat required to make a liquid at a certain pressure turn into a vapor at that pressure. The saturation temperature changes with the pressure of the refrigerant.

On the system's high side, the process reverses – pressures rise well over 100 PSI (690 kPa), increasing the refrigerant's temperature and its boiling point. In fact, at these pressures, the refrigerant temperature would be higher than outside air – the refrigerant would like to change back into a liquid.

But it can't. Not yet, anyway – not until it gets rid of the heat it absorbed earlier when it changed states to become a vapor. Until it gets rid of that additional heat, it will remain a vapor. The additional heat keeping the refrigerant from changing back into a liquid is called *"superheat."* To condenser back into a liquid, it has to release that superheat.

That's easy – remember, when the refrigerant pressure increased, so did its temperature – well above the ambient air temperature. The "superheated" refrigerant passes through the condenser and has no problem releasing its heat to the outside air, enabling it to condense back into a liquid.

These principles of temperature, pressure, boiling point and heat transfer are what allow an air conditioning system to work.

R-134a AUTOMOTIVE

R-134a TEMPERATURE PRESSURE CHART

TEMP F.	PSIG	TEMP F.	PSIG
16	15.69	93	110.20
18	17.04	94	112.10
20	18.43	95	114.10
22	19.87	100	124.30
24	21.35	102	128.50
26	22.88	104	132.90
28	24.47	106	137.30
30	26.10	108	141.90
32	27.79	110	146.50
34	29.52	112	151.30
36	31.32	114	156.10
38	33.17	116	161.10
40	35.07	118	166.10
42	37.03	120	171.30
44	39.05	122	176.60
45	40.09	124	182.00
50	45.48	126	187.50
55	51.27	128	193.10
60	57.47	130	198.90
65	64.10	135	213.70
70	71.19	140	229.40
75	78.75	145	245.80
80	86.80	150	263.00
85	95.40	155	281.10
90	104.40	160	300.10
91	106.30	165	320.00
92	108.20	170	340.80

EVAPORATOR RANGE

CONDENSER RANGE

All values rounded two places

The numbers above represent boiling points for R-134a

EVAPORATOR pressures represent gas temperatures inside the coil and not the coil surfaces. Add to temperature for coil air-off temperatures (8-10f.)

CONDENSER temperatures are not ambient temperatures. Add to ambient (35-40F) for proper heat transfer, the refer to pressure chart.

Example 90 F ambient temp
+40
130 F condenser temp = 200 psig*
*(Based on 30 MPH air flow)

Conditions will vary for different system configurations.
Refer to manufacturers specifications.

BADGER TRUCK REFRIGERATION INC.

New Refrigerant HFO-1234yf

- HFO-1234yf
  - System operating pressures are similar to an R134a system
  - It is mildly flammable
    - Work area must have proper ventilation
    - Handling and storage of cylinders must meet OSHA requirements
  - High energy required for ignition
    - Very few vehicle sources will ignite refrigerant
    - Open flame will ignite

New Refrigerant HFO-1234yf

- New Service Equipment [J2843 – J2851]
- New Technician Certification HFO-1234yf [J2845]
  - Safety Issues
    - Refrigerant handling
  - OSHA Requirements
    - Workspace
    - Handling and storage of containers
  - Proper Service Procedures

New Refrigerant HFO-1234yf

- State Use Regulations
  - Flammability
- System refrigerant contamination issues
  - Effects are unknown when mixing R-134a and other SNAP listed refrigerants with HFO-1234yf

HFO-1234yf Systems

- System Components
  - Most R-134a hose and seal materials are compatible with HFO-1234yf systems
- Lubricant compatibility
  - PAG with different additives for belt driven compressors
  - Carry over POE for electric compressors
- Mixing of HFO1234yf and R-134a
  - Should not be mixed due to mild flammability
  - Oils for HFO1234yf and R134a are similar but mixing impact is unknown

HFO-1234yf Systems

- HFO-1234yf System Differences
  - New Compressors
    - Control of oil circulation
  - Potential addition of Internal Heat Exchanger between high and low side in plumbing
  - New Service Fittings

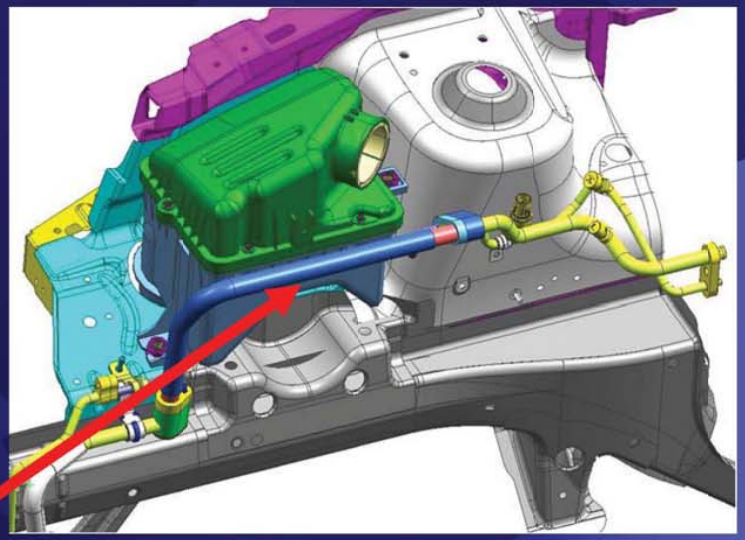

HFO-1234yf Refrigerant Charging

- Systems will minimize refrigerant charge
  - Knowing amount of system charge is critical
  - Overcharging may result in safety and performance concerns
- Systems will have less refrigerant leakage
  - Will require less service
- No "Top off" refrigerant charging!!!!!!
  - Refrigerant removal and proper charge is required

New standards for HFO-1234yf

- J2843 Recovery/recycle-Recharge required
  - Flammability issues
  - System operation and performance
  - J2851 for recovery only
  - J2888 covers service hoses
- J2911 requires certification of equipment, components, and technician training
- J2912 refrigerant identifiers
- J2913 Leak Detector
  - Some HFC-134a leak detectors may not Identify HFO-1234yf

R-1234yf
Fahrenheit
Pressure/ Temperature Chart

PSIG	°F	PSIG	°F	PSIG	°F
9	0	77	72	200	132
11	4	80	74	206	134
14	8	83	76	212	136
16	12	86	78	218	138
19	16	89	80	223	140
19	17	92	82	229	142
20	18	96	84	236	144
23	22	99	86	242	146
24	23	102	88	248	148
25	24	106	90	255	150
28	28	110	92	261	152
31	32	113	94	268	154
33	34	117	96	275	156
35	36	121	98	282	158
37	38	125	100	289	160
38	40	129	102	296	162
40	42	133	104	304	164
42	44	137	106	311	166
44	46	142	108	319	168
47	48	146	110	326	170
49	50	148	111	334	172
51	52	150	112	342	174
53	54	155	114	351	176
56	56	160	116	359	178
58	58	164	118	368	180
61	60	169	120	376	182
63	62	174	122	385	184
66	64	179	124	394	186
68	66	184	126	403	188
71	68	190	128	413	190
74	70	195	130		

EVAPORATOR

CONDENSER

Data courtesy of DuPont and generated using REFPROP, Std Ref Program, NIST

RD-5-13074-0P Rev –

Copyright ©2011 Red Dot Corporation

R-1234yf
Celsius
Pressure/ Temperature Chart

kPa	°C	kPa	°C	kPa	°C
62	-18	544	23	1363	55
75	-16	562	24	1398	56
90	-14	581	25	1432	57
105	-12	601	26	1468	58
120	-10	620	27	1504	59
137	-8	641	28	1541	60
155	-6	661	29	1578	61
174	-4	682	30	1616	62
194	-2	704	31	1654	63
214	0	726	32	1694	64
225	1	748	33	1733	65
236	2	771	34	1774	66
248	3	794	35	1815	67
260	4	818	36	1857	68
272	5	842	37	1900	69
284	6	866	38	1943	70
297	7	891	39	1987	71
309	8	917	40	2032	72
323	9	943	41	2078	73
336	10	970	42	2124	74
350	11	997	43	2171	75
364	12	1024	44	2219	76
379	13	1052	45	2267	77
394	14	1081	46	2317	78
409	15	1110	47	2367	79
425	16	1140	48	2418	80
440	17	1170	49	2523	82
457	18	1201	50	2631	84
473	19	1232	51	2743	86
490	20	1264	52	2859	88
508	21	1297	53	2979	90
526	22	1330	54		

EVAPORATOR

CONDENSER

Data courtesy of DuPont and generated using REFPROP, Std Ref Program, NIST

RD-5-13074-0P Rev –

Copyright ©2011 Red Dot Corporation

Basic Air Conditioning System

Refrigerant system divided into two halves

There are two basic system configurations: systems that use expansion valves and systems that use orifice tubes. For both of these systems, the refrigerant is divided into a high pressure side and a low pressure side – the dividing points are the compressor and the expansion valve or orifice tube.

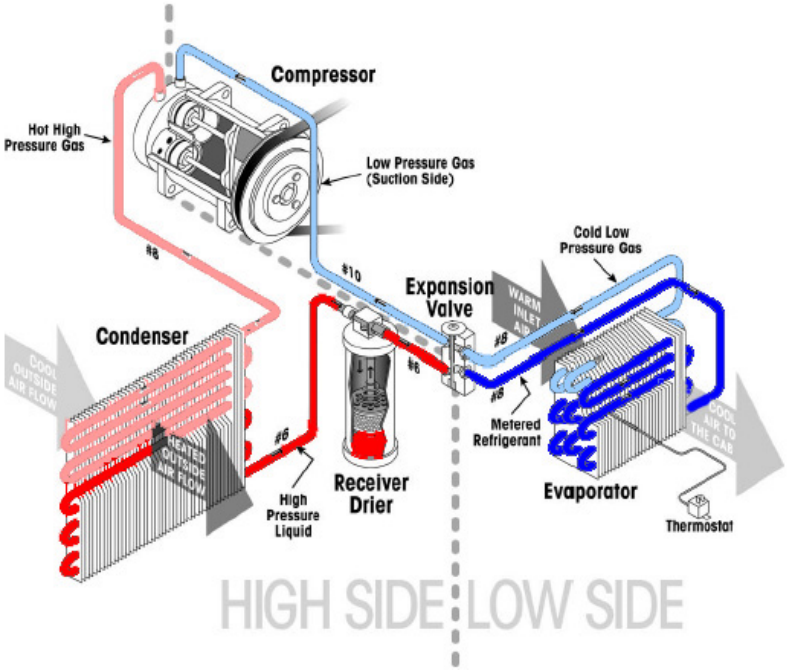

The air conditioning system is divided into two sides, the high side and the low side. This illustrates the flow of refrigerant through the system.

In the expansion valve system, the high side begins at the compressor, continues through the condenser, on through the receiver/drier and ends at the expansion valve. The low side begins where the high side left off – at the expansion valve. From there it continues through the evaporator and ends at the compressor.

In an orifice tube system, the high side again begins at the compressor, continues through the condenser, and ends at the orifice tube. The low side begins where the high side left off – at the orifice tube. From there it continues through the evaporator, through the accumulator, and again ends at the compressor.

Let's take a look at how each part in the system affects the refrigerant, to allow it to remove heat from the passenger compartment.

Compressor starts refrigerant flow

The compressor is nothing more than a pump (a gas pump, not a liquid pump); its job is to move the refrigerant through the system. When restricted, that flow creates the pressure differential in the system. The compressor's mounted on the engine, and a drive belt from the engine turns the compressor driveshaft, working the compressor pistons back and forth. The back-and-forth movement of the pistons is what draws the refrigerant in on the low side and pumps it out on the high side.

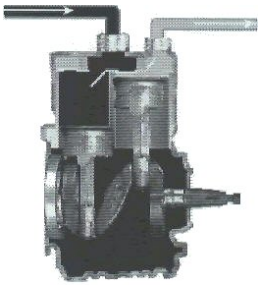

The compressor pumps the refrigerant through the system to provide flow.

When the compressor runs, it pushes all of the refrigerant in the system toward the high side of the expansion valve. At the same time, it pulls all the refrigerant it can from the evaporator side of the expansion valve.

Expansion valve restricts the refrigerant flow

The expansion valve is a restricting orifice that sits between the high side and the low side of the refrigerant system. Whenever you place a restriction in the flow of a closed system, you create a pressure differential between the two sides of the orifice.

The movement of the refrigerant with the expansion valve orifice restricting its flow creates the high side and the low side of the system.

A small amount of high-pressure refrigerant passes through the orifice in the expansion valve, and as it reaches the low pressure in the evaporator, the refrigerant's pressure drops to about 30 PSI (207 kPa).

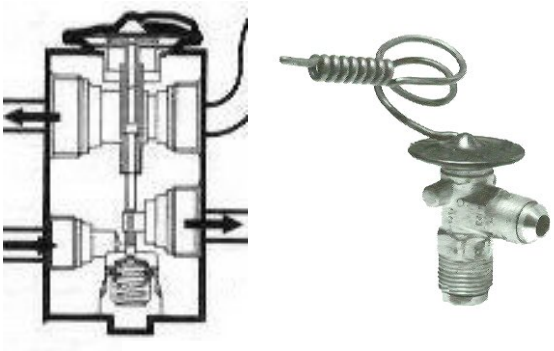

The expansion valve restricts the flow of refrigerant, to provide the pressure differential the system needs for the refrigerant's temperature and boiling point to increase and decrease.

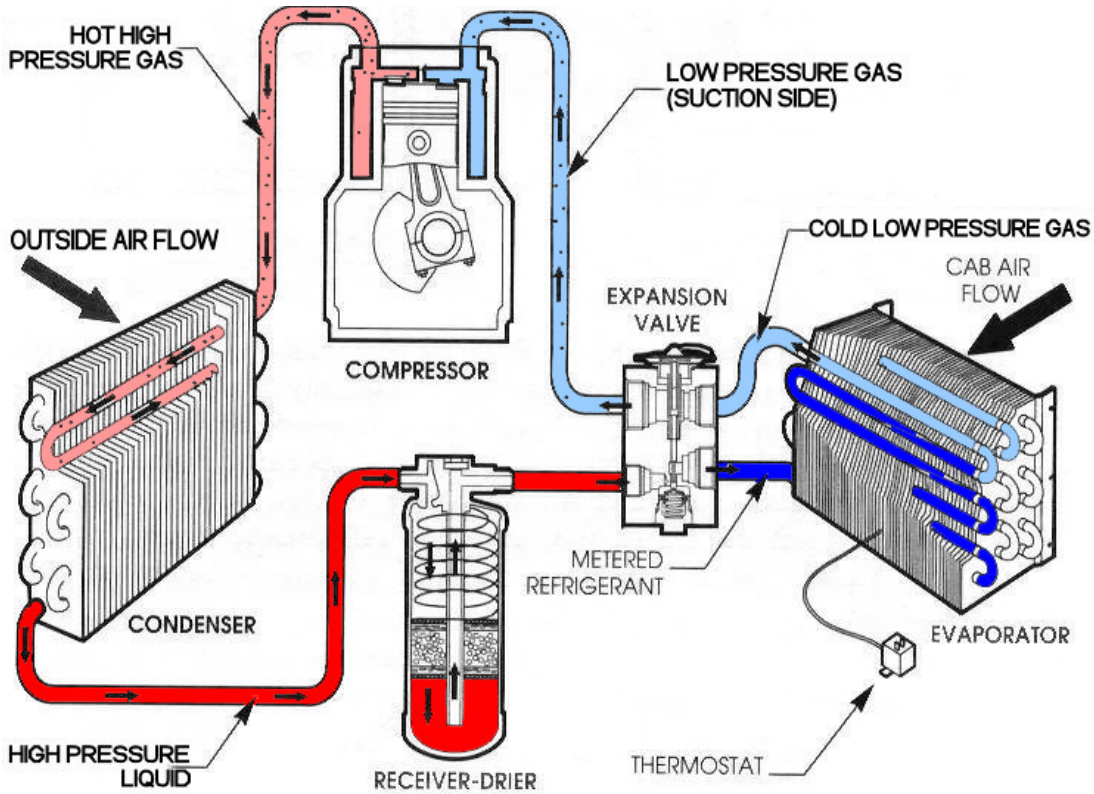

Orifice Tube Replaces Expansion Valve

An orifice tube system works similar to an expansion valve system, with one notable exception: Since the orifice tube is a fixed size, the tube must flood the evaporator to work properly under all conditions. As the refrigerant passes through the evaporator, most of it changes to a vapor.

From the evaporator, the refrigerant goes into the accumulator. The accumulator replaces the receiver/drier in the system and separates the liquid refrigerant from the refrigerant vapor. This prevents liquid refrigerant from getting back to the compressor. The additional liquid remains on hand, for times when the heat load is high. From the accumulator, the low pressure vapor returns to the compressor, where the refrigerant begins its cycle again.

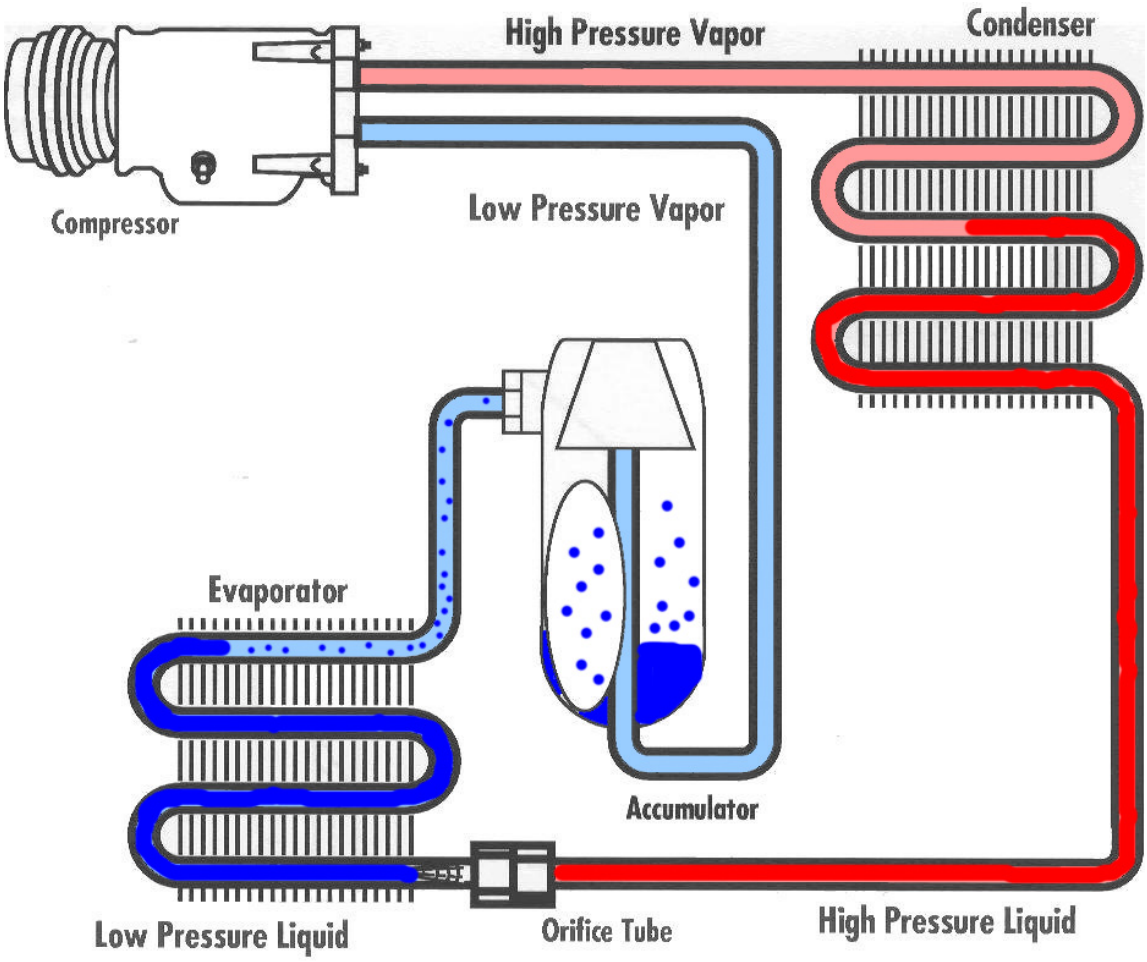

Air blowing past the evaporator provides the heat necessary

Warm air passing over the evaporator fins supplies the heat necessary for the refrigerant to change states. As the air flows past the evaporator fins, the refrigerant absorbs the heat it needs to change states, and carries it away from the evaporator.

By removing the heat from the air, it becomes cooler, and cools the air coming into the passenger compartment.

Remember what we said about the pressure/temperature relationship of refrigerant? When the refrigerant is pressurized to 30 PSI (207 kPa), the temperature is about 32°F (0°C). That's why it feels cold – 32°F *is* cold to the touch.

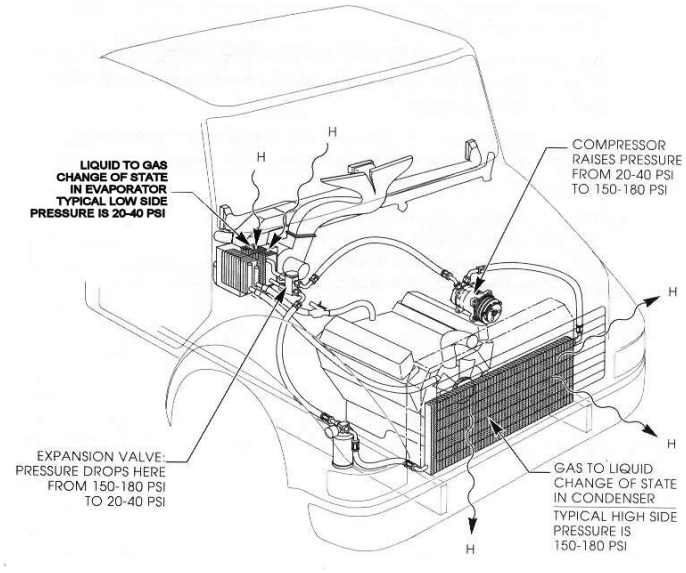

Warm air moving past the evaporator provides the heat necessary for the low-pressure refrigerant to boil and change states.

At 32°F (0°C) the refrigerant is cooler than the surrounding air, so it begins to absorb heat from the surrounding air. What's more, 32°F (0°C) is also right around the refrigerant's boiling point. Since the refrigerant is at its boiling point, it beings to boil and change into a vapor.

But remember what we said about liquids changing state? For the refrigerant to change into a vapor, it must take on heat. It's the extra heat that the refrigerant takes on by changing states that makes the system absorb enough heat to work. Where does the heat come from?

That's easy; remember, it's summertime – one thing we've got plenty of is heat!

Vaporized refrigerant is drawn into the compressor

The refrigerant vapor continues along through a refrigerant hose, to the compressor assembly. As the compressor turns, it pulls the low-pressure refrigerant gas in, and squeezes it down into a small fraction of its original area.

The compressed refrigerant leaves the compressor as a gas, but under tremendous pressure – as much as 350 pounds! At this pressure, its boiling point is well above the ambient temperature. The refrigerant would like to condense back into a liquid, but to condense back into a liquid it must first release the heat it absorbed back in the evaporator.

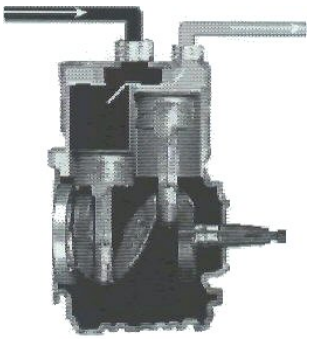

Low pressure refrigerant gas leaves the evaporator and is drawn in by the compressor. Compressing the refrigerant raises its pressure and its temperature.

Refrigerant changes back to a liquid by releasing its heat in the condenser

The condenser is a heat exchanger that sits in front of the engine radiator or has fans mounted remotely on it. Refrigerant enters the condenser as a hot compressor gas. Because it's so much hotter than the outside air, the refrigerant easily releases its heat to the air rushing past the condenser fins.

As it releases its Latent Heat, the refrigerant changes state, back to a liquid. It's still under high pressure, and it's still hot – remember, most of the heat it releases in the condenser is Latent Heat. The temperature of the refrigerant may remain almost the same, but it's released all of its Latent Heat and has changed states, back to being a high-pressure liquid.

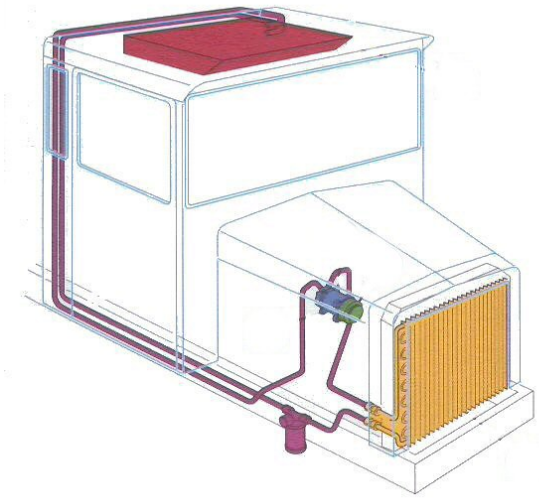

The hot, compressed refrigerant leaves the compressor and enters the condenser. Air blowing past the condenser coils carries away the excess heat, allowing the refrigerant to condense back to a liquid.

Receiver/Drier holds extra refrigerant in reserve

From the condenser, the refrigerant makes its way to the receiver/drier. The receiver/drier contains a desiccant to remove excess moisture away from the refrigerant.

The receiver/drier also stores additional refrigerant until it's needed later when the heat loads increase. The heat load is the amount of heat to be removed from the air. A number of variables affect heat load: ambient temperature, the number of passengers, hydraulic component heat, solar heat, and/or engine heat. As heat loads increase, the need for extra refrigerant increases with it. That extra refrigerant is stored in the receiver/drier.

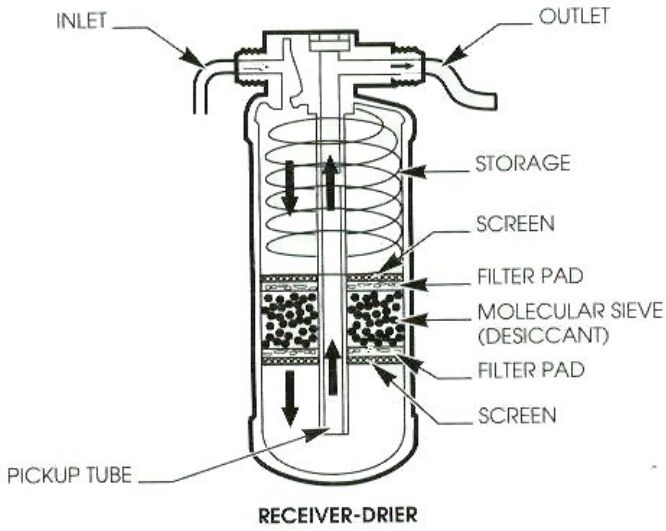

Inside the receiver/drier, desiccant absorbs any excess moisture from the refrigerant.

From the receiver/drier, the high-pressure liquid refrigerant makes its way back to the expansion valve to begin its journey all over again.

Blower motor provides air flow through the evaporator

One of the most basic controls for maintaining a comfortable passenger compartment is the blower motor. This is a fan that forces air past the evaporator and into the passenger compartment.

In most cases, the blower motor speed is adjustable. By changing the switch position on the control panel, the operator can adjust the speed of the blower motor from low to high, in three or four steps.

The slower the fan speed, the longer the air sits along the evaporator coils. This removes more heat, and reduces the temperature of the air from the air conditioner vents. NOTE: Air outlet temperatures will be lower on low fan speed.

In addition, cooler air holds less moisture than warm air. The longer the air stays near the evaporator fins, the more moisture will condenser on the fins and the drier the air coming into the passenger compartment. As more condensation builds up on the evaporator fins, it begins to run off, and leaks out of the machine through the evaporator drain.

This also helps to purify the air to a degree. Dust and pollen particles that come in contact with the wet evaporator are pulled out of the air stream and wash out through the water drain.

Table of Contents

Air Conditioner Components Identification:

Condensers

Compressors and Clutches

Switches

Thermostats

Relays

Receiver/Driers

Expansion Valves

Condensers

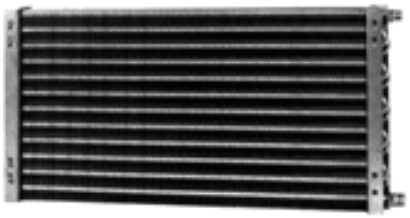

Tube & Fin (Radiator Mount)

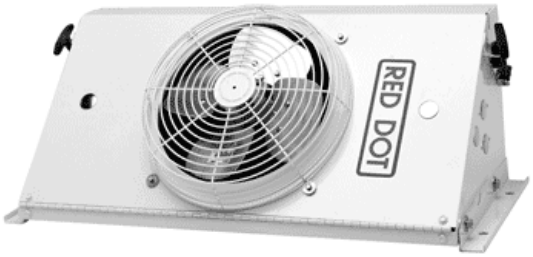

Tube & Fin (Remote Mount)

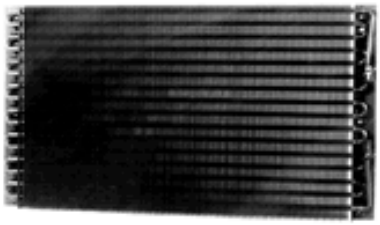

Grilldenser

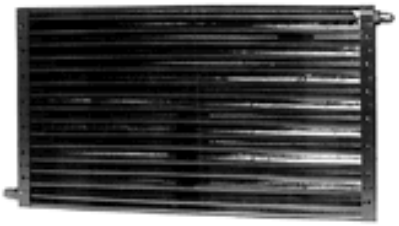

Serpentine Style

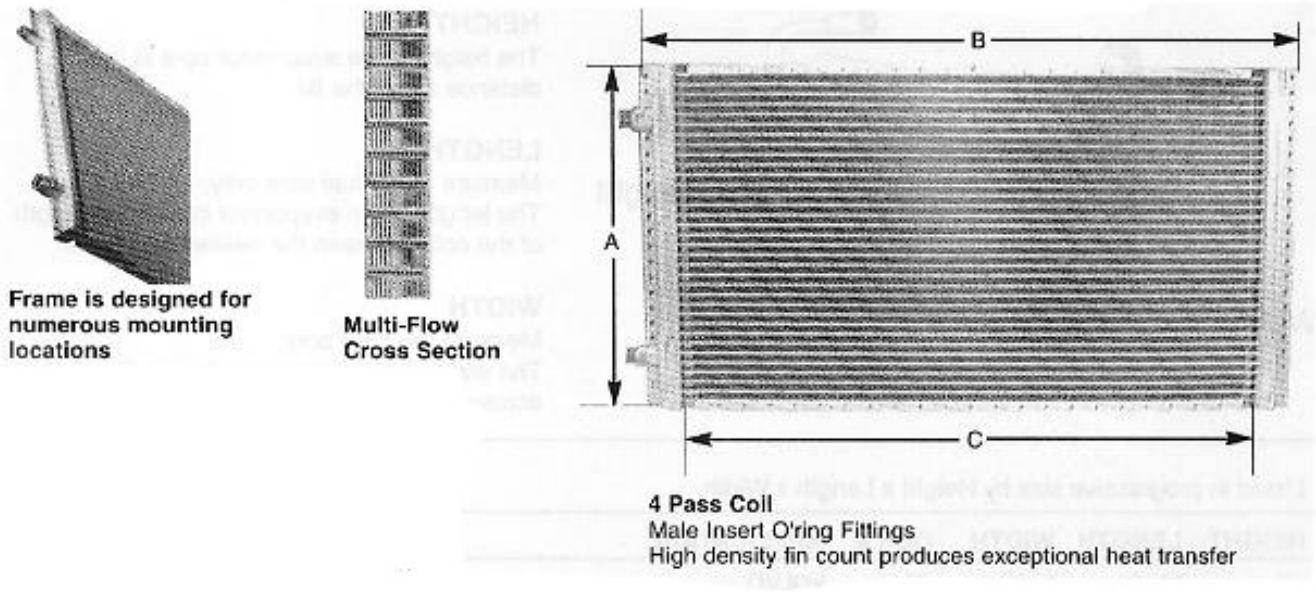

Multi-Flow

Compressors and Clutches

Compressor

1. Tecumseh, York and CCI
2. Sanden & Zexel
3. Nippondenso
4. Harrison (GM)
5. Scroll

Two-Cylinder CCI or Tecumseh

Sanden

Seltec/Zexel/ICE

Nippondenso

Harrison (GM)

Clutches

Basic Clutch Information

Guide to Clutch Identification

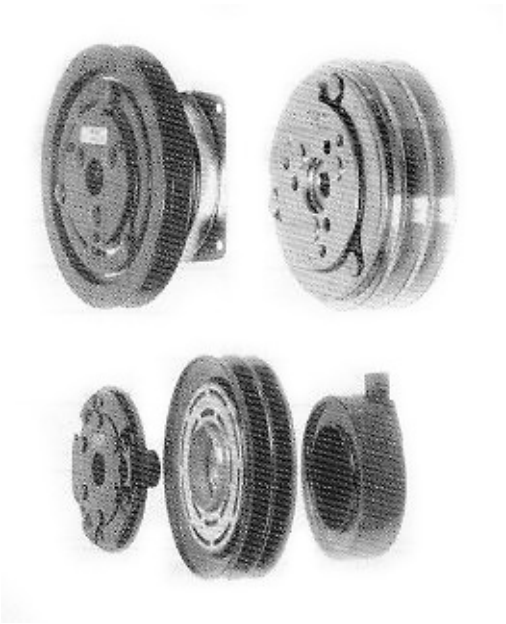

The clutch used on a particular machine depends on the type of compressor selected from an option list when the machine was first assembled. However, after hours of service, original parts most likely have been replaced. For whatever reason, a machine originally equipped with a reciprocating compressor may now be using a rotary type or possibly a single groove clutch has been replaced with a double groove. To assure you get the right part the first time, it is important to identify the compressor the clutch is to be used on, and the characteristics or specifications of the clutch. If possible, check for label or stamped numbers on the clutch body or the coil assembly to identify the clutch.

If the clutch marking or label is illegible, the following information will be needed:

1. Compressor Make and Model
2. Voltage – 12 or 24 Volt
3. Diameter of Clutch Pulley
4. Number of Grooves; Width of Drive Belt
5. A-B Distance or Gauge Line

A “How to Measure” guide is shown in each clutch section to help in identification.

IF PART NUMBER ON CLUTCH BEING REPLACED CANNOT BE READ, USE THE FOLLOWING PROCEDURE(S) TO DETERMINE REQUIRED CLUTCH.

HOW TO MEASURE:

1. DETERMINE IF 12 OR 24 VOLT (BLACK WIRE = 12V, GREEN WIRE = 24V)
2. DETERMINE IF CLUTCH IS SINGLE, DOUBLE OR POLY GROOVE
3. MEASURE OUTSIDE DIAMETER OF PULLEY
4. MEASURE WIDTH OF PULLEY GROOVE
    a. Single and Double Groove = measure the width of pulley groove
    b. Poly Groove = count the number of grooves
5. MEASURE ACCURATELY THE A-B DISTANCE
    a. Single and Double Groove = measure the distance from the compressor mounting hold on the side of the compressor to the middle of the first belt groove on the pulley
    b. Poly Groove = measure the distance from the compressor mounting hole on the side of the compressor to the middle of the first groove on the pulley
6. DETERMINE THE NUMBER OF WIRES

Tecumseh/York/CCI

How to Measure:

1. Determine if 12 or 24 volt (Black Wire = 12V, Green Wire = 24V)
2. Determine if clutch is single, double or poly groove
3. Measure outside diameter of pulley
4. Measure width of pulley groove
    a. Single and Double Groove = measure the width of pulley groove
    b. Poly Groove = count the number of grooves
5. MEASURE ACCURATELY THE A-B DISTANCE
    a. Single and Double Groove = measure the distance from the compressor mounting hold on the side of the compressor to the middle of the first belt groove on the pulley
    b. Poly Groove = measure the distance from the compressor mounting hole on the side of the compressor to the middle of the first groove on the pulley
6. DETERMINE THE NUMBER OF WIRES

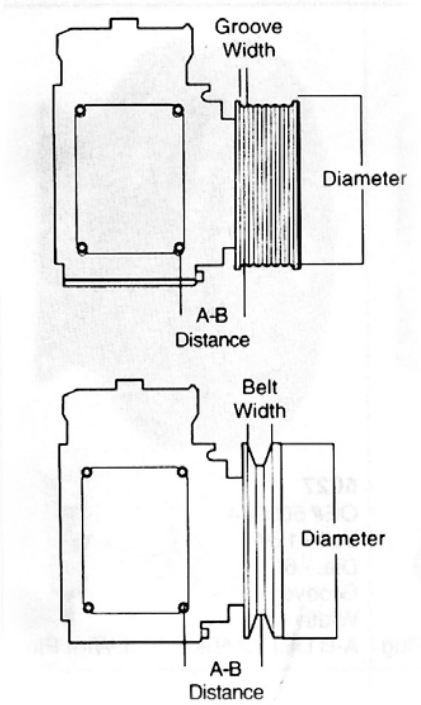

Sanden

HOW TO MEASURE:

1. DETERMINE IF 12 OR 24 VOLT
2. DETERMINE IF CLUTCH IS SINGLE, DOUBLE OR MULTI-GROOVE
3. MEASURE OUTSIDE DIAMETER OF PULLEY
4. MEASURE WIDTH OF PULLEY GROOVE
5. MEASURE ACCURATELY THE A-B DISTANCE

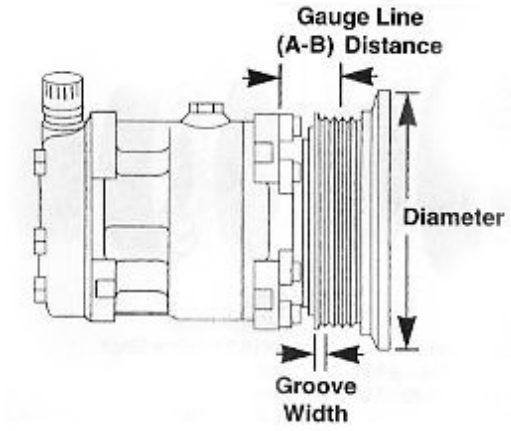

Sanden Clutch Identification

	Double Groove	Variable Groove	Offset Groove
Single Wire Coil	125mm (4.9") *Style A*	158mm (6 1/4") *Style C*	122mm (4 3/4") *Style D*
	132mm (5 1/4") *Style B*		(OverHang)
Double Wire Coil	125mm (4.9") *Style M*		
	132mm (5 1/4") *Style N*		
	152mm (6") *Style O*		

	6 Poly Groove	7 Poly Groove	8 Poly Groove	10 Poly Groove
		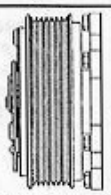	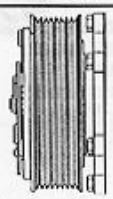	
Single Wire Coil	119mm (4.6") *Style E*	119mm (4.6") *Style F*	119mm (4.6") *Style G*	125mm (4.9") *Style H*
Double Wire Coil	125mm (4.9") *Style T*	119mm 4.6") *Style U*	119mm (4.6") *Style V*	
			130mm (5") *Style W*	
			132mm (5 1/4") *Style X*	
			152mm (6") *Style Y*	

Seltec/Zexel/ICE

HOW TO MEASURE:

1. DETERMINE IF 12 OR 24 VOLT
2. DETERMINE IF CLUTCH IS SINGLE, DOUBLE OR MULTI-GROOVE
3. MEASURE OUTSIDE DIAMETER OF PULLEY
4. MEASURE WIDTH OF PULLEY GROOVE
5. MEASURE ACCURATELY THE A-B DISTANCE

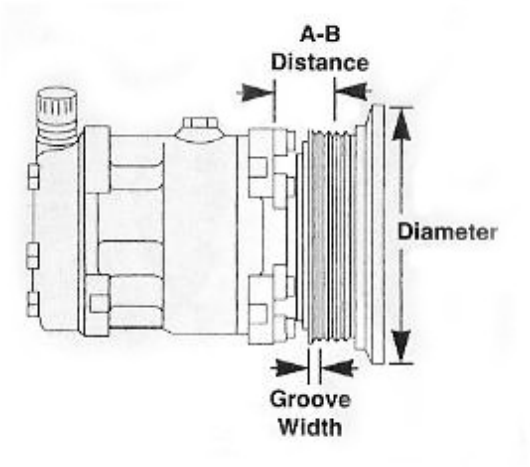

Seltec Clutch Identification

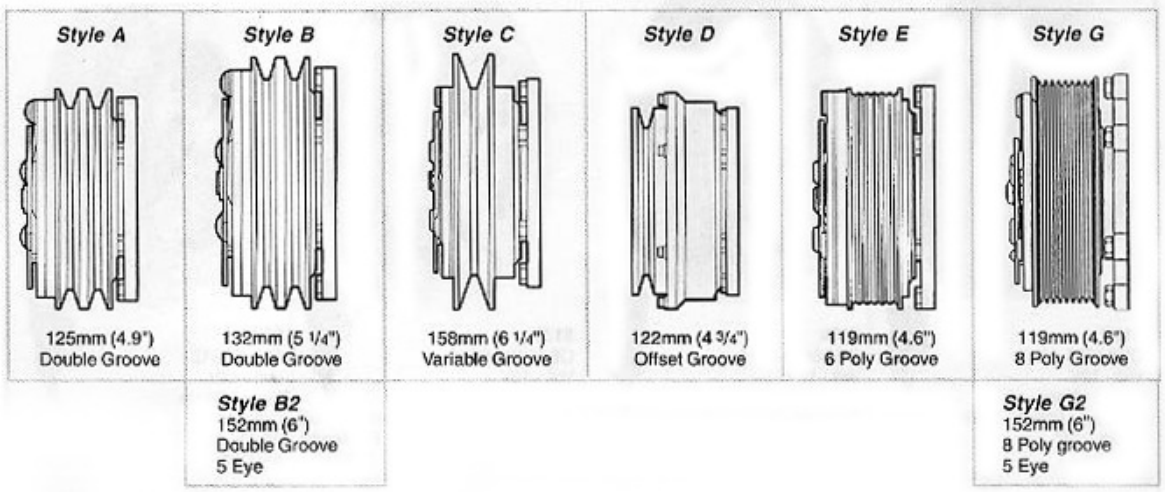

Switches

Pressure Switch Identification

20PS 002 M A 250 E 100 K

Vender Spec Codes

Standard Port Fitting	
A	1/4"NPTF Male Port
E	1/8"NPTF Male Port
H	1/4" SAE Male Flare
J	1/8"NPTF Female Port
M	1/4" Female Flare w/ valve core depressor

Switch Setting	
A	NO
B	NC
C	NO
D	NC
E	NO
F	NC
J	NO
K	NC
L	NO
M	NC
N	NO
P	NC
T	NO
U	NC

Actuation Pressure

Deactuation Pressure

Tolerances	
Code	± psi
C	3
D	4
E	5
F	6
G	7
H	8
J	9
K	10
R	15

NOTE:
Lt. Blue Wire = NO Switch
Black Wire = NC Switch

Female Binary

Male Binary

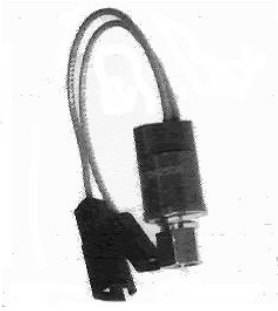

Low Pressure Switch

High Pressure Switch

Male Trinary

Female Trinary

Thermostats

Cable Controlled Thermostat

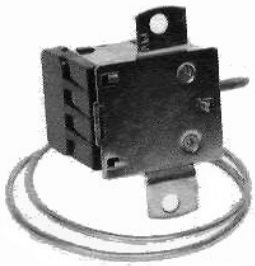

Fixed (Pre-Set) Setting Thermostat

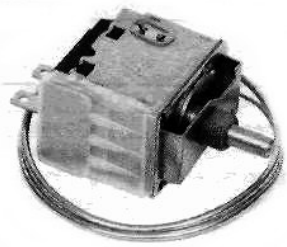

Rotary Thermostat

Electronic Thermostat

Relays

12 V Relay, 30A

Bosch OE

Relay Wire Harness

24V Relay

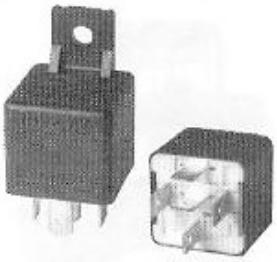

Bottom View

12V Relay, 20 Amp, 5 Terminal

Resistor

12V Relay, 4 Terminal

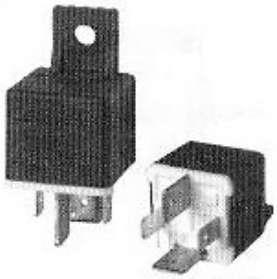

Bottom View

12V Relay, 30A

Bosch Aftermarket Replacement

Bottom View

Relay Specifications

Volts	Amps	Pole/Throw	NO/NC	Terminals	Notes
12	20/40	SPDT		5	Weatherproof/ W/ Resistor
12		SPDT		5	Bracket/Diode
12	30/40	SPDT		5	No Bracket
12		SPDT		5	GM 14089936
12	30/40	SPDT		5	No Bracket/ W/ Resistor
12		SPDT		4	Ford Blower Relay
12		SPDT		5	
12	30	SPDT		5	
12	20	SPDT		5	Mini Contacts/ W Resistor
12		SPST	NO	4	INTL 452187C1
12	30	SPDT		5	INTL 447186C1
				3	
12	20/40	SPDT		5	Bracket/Resistor
12	40	SPST	NO	5	Bracket/Dual Contacts
12	10/20	SPDT		5	Bracket/Resistor
12	40	SPDT		5	No Bracket/ W/ Diode
12	30	SPST	NO	5	Bracket/Dual Contacts & Diode
24	10/20	SPDT		5	Bracket/Resistor
12	70	SPST	NO	4	Bracket/Resistor
12	30/40	SPDT		5	Bracket

Receiver/Driers

Receiver/Driers, Accumulators and In-Line Filters are canisters used to filter debris and remove moisture to protect the A/C system. Various inlet and outlet fitting types and sizes are used. Many also have system protection devices, moisture indicators, charge ports, sight glass, fuse plugs, high pressure relief valves, and/or mounting brackets depending on the requirements from the original equipment manufacturer.

Receiver/Driers are usually located on the high side of the A/C system before the expansion valve. The receiver/drier "receives" liquid refrigerant from the condenser, stores it, filters out contaminants from the A/C system, and removes moisture. A/C systems using a receiver/drier use an expansion valve to control the refrigerant flow.

Accumulators are similar to that of a receiver/drier. It is usually mounted on the low side, at the outlet of the evaporator. The accumulator "accumulates" or stores excess refrigerant, filters and dries the refrigerant. Accumulator are CCO (Cycling Clutch Orifice Tube) or FFOT(Ford Fixed Orifice Tube) systems. These systems use an orifice tube instead of an expansion valve to control the refrigerant flow.

In-Line Filters are designed to be used in the liquid line in A/C systems with the orifice tube located in the evaporator. Placing the in-line filter "up stream" of the orifice eliminates the need to flush most systems, because the impurities are trapped before they reach the orifice tube. These filters are designed to hold up to 90 grams of debris, without a substantial penalty to the system's flow. The screens and filter pads inside the canister, catch particles and filters the refrigerant oil.

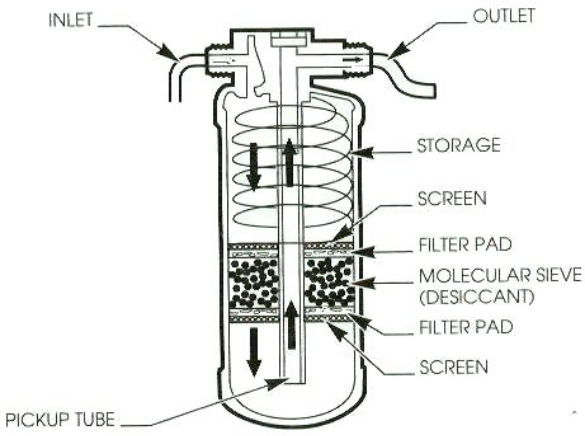

RECEIVER-DRIER

74R0460

Expansion Valves

EXPANSION VALVES (TXV)

The **expansion valve** (also referred to as TXV) is located at the evaporator inlet; controlling the flow of refrigerant entering the evaporator on the cooling load or the evaporators temperature. A metering valve inside the expansion valve moves up and down in the refrigerants flow path, opening and closing the pathway inside. The pathway internally, is smaller than the refrigerant line, causing the pressure to drop, changing it from a high pressure liquid to a low pressure liquid mist. Sensing temperature changes, the metering valve constantly opens or closes as it precisely meters the amount of refrigerant needed. The expansion valve is considered one of the dividing lines between the high and low pressure sections of the system. There are three different types of expansion valves: Block, Externally Equalized and Internally Equalized.

ORIFICE TUBES/EXPANSION TUBES

Orifice Tubes/Expansion Tubes consist of a filter screen to remove contaminants, and a calibrated tube to meter refrigerant flow.

Like an expansion valve they are mounted on the inlet side of the evaporator. They are found on vehicles using an accumulator instead of a receiver/drier. CCOT (Clutch Cycling Orifice Tube) and FFOT (Ford Fixed Orifice Tube) systems. Both systems create the pressure drop by metering a steady flow of refrigerant while the compressor is operating. The cycling clutch switch, either a thermostatic switch or a pressure cycling switch turns the compressor on and off. The intermittent compressor operation controls the refrigerant flow and pressure.

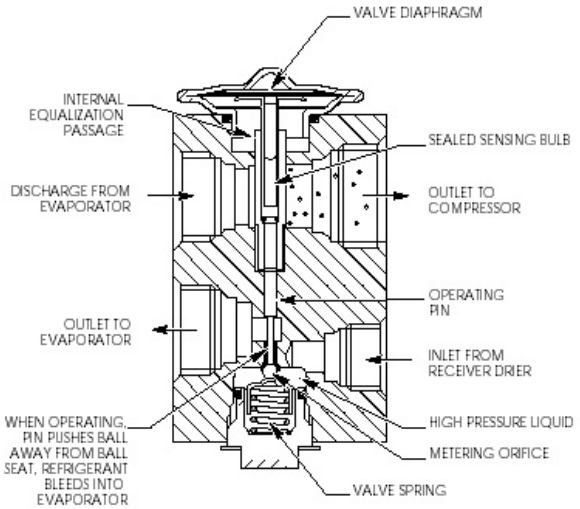

Table of Contents

A/C Service Equipment & System Servicing:

Service Tools and Their Use

Refrigerant Recovery

Evacuating the System

Charging the System

Charging Procedures

System Flushing

Service Tools and Their Use

The basic air conditioner and heater service tools include some special tools and test equipment as well as normal tool chest items.

Safety is important to you as well as to others in your working environment. The air conditioner and heater system are as safe or safer to work on as other vehicle systems, engines, etc. – but they are a little different.

Safety & Safety Equipment

- In servicing HVA/C systems you will exposed to high pressures, temperatures and several chemical hazards. Moving belts and pulleys are normal shop hazards.
- In addition to exercising caution in your work, **ALWAYS WEAR SAFETY GOGGLES OR A FACE SHIELD** when you are using refrigerant or a leak detector, adjusting service valves or the manifold gauge set connectors. Safety goggles or a transparent face shield are practical safety items. **ONE OR THE OTHER IS ABSOLUTELY REQUIRED.**
- Refrigerant inside a container and in parts of the A/C system is a liquid under pressures. When refrigerant escapes or is released to the air, **ITS TEMPERATURE DROPS *INSTANTLY (R-134a is -16°F)***. If it spills on your skin or in your eyes, flood the area with cool water and **SEEK MEDICAL ATTENTION IMMEDIATELY.**
- The compressor creates pressure when it runs. If pressures get too high in the system, the weakest point may separate or blow out. A system restriction, too much refrigerant, or improper charging procedures are all potentially dangerous.
- Keep in mind the fact that R12 refrigerant becomes a poison gas when it burns. **DO NOT SMOKE AROUND REFRIGERANT.**
- Do not grab hold of a clutching fan to stop it when it is disengaged but turning at low RPM. **THE FAN CAN SERIOUSLY INJURE YOUR HAND.**
- Be sure the area you are working in has plenty of ventilation and that no gas or other fumes are present. **DO NOT USE A LEAK DETECTOR OR REFRIGERANT WITHOUT ADEQUATE VENTILATION. DO NOT RUN THE VEHICLE ENGINE DURING A PERFORMANCE INSPECTION OR WHEN CHARGING THE SYSTEM WITHOU ADEQUATE VENTILATION.**

WARNING: Fire or explosion hazards exist under certain conditions with R134a. A combustible mixture can form when air pressures are above atmospheric pressure, and a mixture of air and R134a exist. For this reason do not pressure test air conditioning systems with compressed air.

Air Conditioning System Service Tools

The basic AC tools necessary to work on mobile air conditioning include:

1. Recover/Recycling Station
2. Refrigerant Dispensing Valves & Containers
3. Manifold Gauge Set
4. System Service Valves
5. Vacuum Pumps
6. Leak Detectors
7. Flushing Kit
8. Heater System Service Tools
9. Other Equipment

Refrigerant Dispensing Valves & Containers

Bulk containers should always be used with a scale or charging station capable of measuring the refrigerant put into the system. The most common refrigerant container is a 30 pound cylinder and may be dispensed with single or dual dispensing valves.

NOTE: All containers with refrigerant are under pressure (to contain the refrigerant). Any heat will increase that pressure. The containers are not designed to withstand excessive heat even when empty, and should never exposed to high heat or flame because they can explode. Containers must be certified as meeting DOT CFR Title 49 requirements.

There are several other tools that could be used when charging and A/C system with refrigerant. These are a charging meter (refrigerant scale) or a charging station.

Manifold Gauge Set

The manifold gauge set is the tool used for internal system diagnosis and service. A typical manifold has two screw type hand valves to control access to the system, two gauges and three hoses. The gauges are used to read system pressure or vacuum. The manifold and hoses are for access to the inside of an air conditioner, to remove air and moisture, and to put in or remove refrigerant from the system. Shutoff valves are required within 12 inches of the hose ends to minimize refrigerant loss.

The figure below illustrates a basic manifold gauge set and explains how it works.

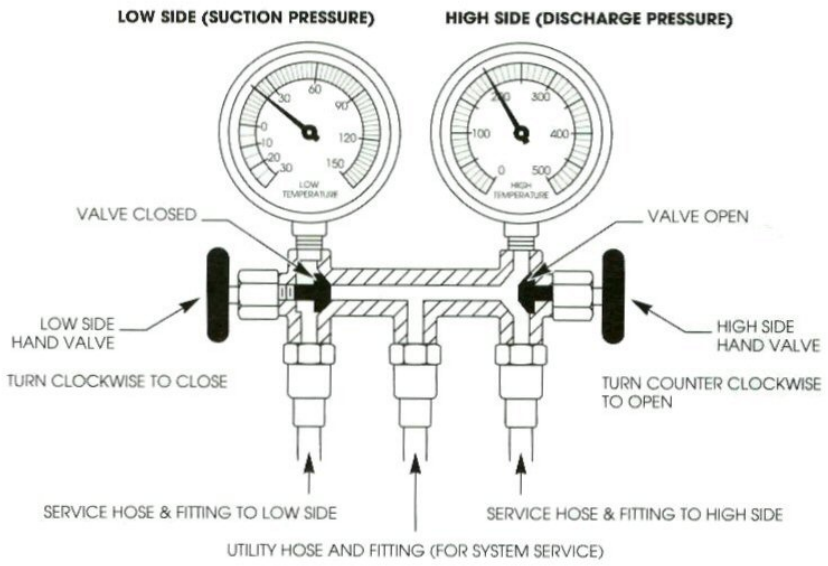

The low pressure gauge displays pounds per square inch (PSI) and inches of mercury (in. Hg). Hg is the chemical symbol for mercury. The high pressure gauge reads in pounds per square inch.

Different style end fittings are used on R12 and R134a hose sets. R12 hose sets us a ¼ female refrigeration flare (FFL) on all hose ends. A shutoff valve is required on all three hoses within 12 inches of the end connected to the A/C system or service equipment. R134a hose sets us a ½ ACME female nut on the gauge end. Special quick disconnect couplings are normally combined with a shutoff valve on the high and low side hoses. The free end of the utility hose contains a ½ ACME female nut and a shutoff device within 12 inches of the hose end. These special hoses and fittings are designed to minimize refrigerant loss and to preclude putting the wrong refrigerant in a system.

Two hoses (left and right) connect to the low and high sides of the system, usually at the compressor on R12 systems. The center (utility) hose is used to remove refrigerant from the system, evacuate air and moisture, or add refrigerant. Gauges are calibrated for either high or low pressure and vacuum. The term compound gauge set is often used because the low pressure gauge responds to pressure and vacuum. Separate gauge sets are required for R12 and R134a.

CAUTION: Many gauges have dials with metric and US scales to measure pressure. The more expensive manifold gauge sets have liquid filled gauges and additional valves and fittings incorporated in the manifold. All gauges are breakable and should be handled with a reasonable amount of care.

The high pressure gauge registers system pressure from 0 to 500 PSI. The low pressure gauge registers pressure from 0 to 150 PSI clockwise, and vacuum from 0 to 30 inches Hg counter-clockwise.

There are a few important rules and procedure you must follow concerning gauge set hookup. Both the rules and procedure are for your safety and to protect the A/C system. The basic rules are covered briefly here. Gauge set hookup should not be done until after you have made a complete visual and performance inspection of all A/C system

components. Condenser cooling system problems can cause false gauge reading and incorrect A/C system diagnosis. Worn drive belts or hoses are dangerous to work around.

CAUTION: Never attempt to hook up the manifold gauge set with the engine running. Never hookup the gauge set until you have checked to be sure the hand valves on the manifold are closed. Never hookup the gauges to the A/C system until you have made a visual inspection.

System Service Valves (R12 Only)

System service valves allow safe access to the system inside of an A/C system through the manifold gauge set. There are usually two service ports mounted in an easily accessible area for access to the low and high pressure sides of the system.

Two types of service valves are in common use today – stem type and Schrader. The stem type valve stems screw in and out. They may be used to isolate the compressor from the rest of the system for fast compressor replacement. The Schrader type valve functions like a tire air valve. They are easy to incorporate in other locations in the system. Figure 6-2 shows both types of valves and how they work.

NOTE: Many systems have extra service valves (Schrader) in the system. These valves accommodate pressure switches or provide another service port. The new R134a refrigerant uses special service fittings to prevent the mixing of refrigerants and oil.

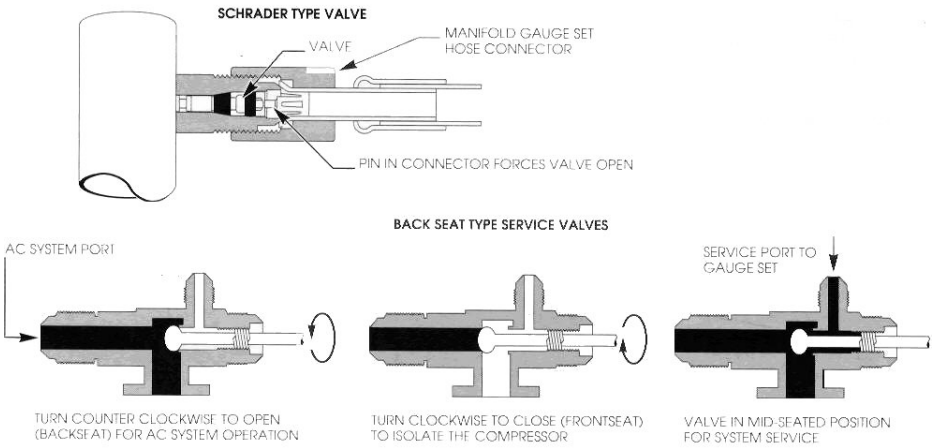

The valve drawings are cutaway. The Schrader valve in the upper portion of the illustration (like a tire air valve) is either closed or open. The three illustrations above show and describe stem type valve operations.

System Service Valves (R134a)

New and unique service hose fittings have been specified for R134a systems. Their purpose is to avoid cross-mixing of refrigerants and lubricants with R12 based systems. The service ports on the system are quick disconnect type with no external threads. They do contain a Schrader type valve as shown in Figure 6-4. The low side fitting has a smaller diameter than the high-side attachment.

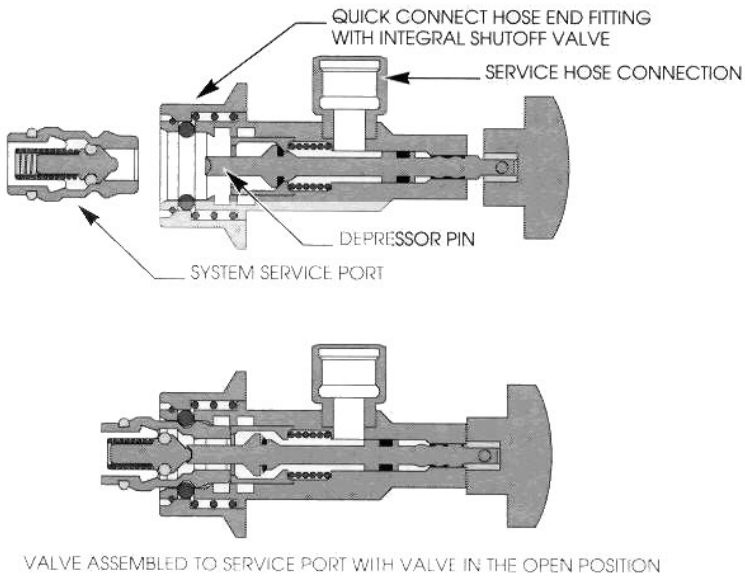

The above illustration shows R-134a service ports and hose end fittings.

R-134a Couplers

Refrigerant Recovery Equipment

J2210

Worst Case: 70% Refrigerant Recovered

- **Service**
- **EOL**

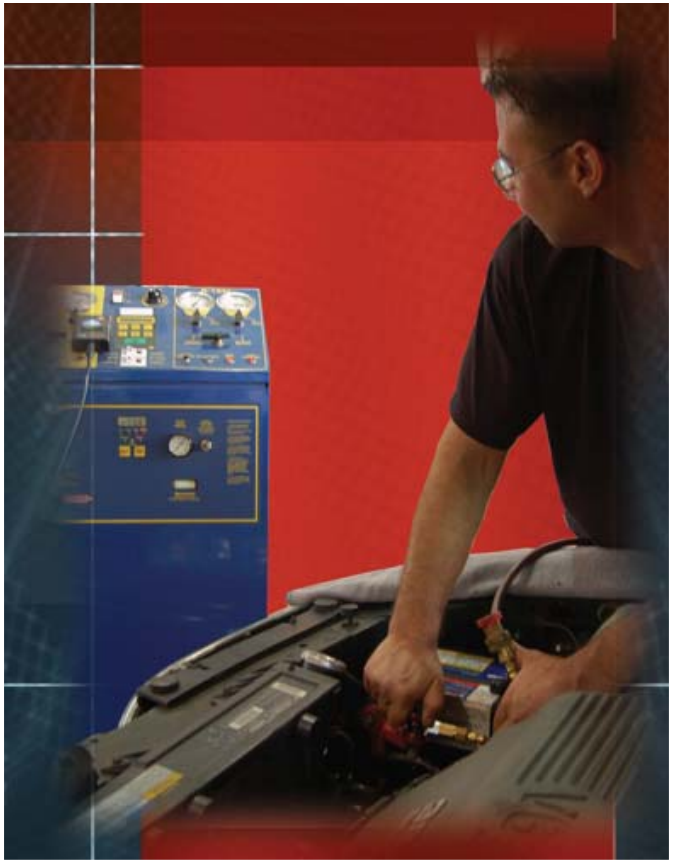

J2788

Worst Case: 95% Refrigerant Recovered

Drivers:

- ***New SAE Standard***
- ***Regulations***

Refrigerant Recovery

R134a isn't a CFC. It doesn't contribute at all to the erosion of the ozone layer. So you might think there's no reason to recycle R134a. Think again.

While it's true that R134a doesn't damage the ozone layer, it does have an effect on global warming. And even if that weren't the case, it's still a chemical that doesn't really belong out in the environment.

To protect the environment, the EPA requires all refrigerants listed for automotive use be recovered; never release a refrigerant into the atmosphere. It's illegal to vent any refrigerant listed by the EPA for automotive use.

To remove the refrigerant from the air conditioning system, you have to recover it, with a refrigerant recovery system. Never release the refrigerant to the atmosphere!

R12 and R134a may be recycled in your shop; most other refrigerants must be recovered, and sent to a reclaiming plant or waste disposal facility. But all refrigerant must be recovered in an environmentally-safe manner.

Before we look at any specific repair procedure, you should know that all of the procedures in this program are environmentally-responsible procedures. While many of you may be familiar with other procedures, or know technicians using procedures that differ from those found here, these procedures have been devised to provide accurate, quick results, while being as careful as possible to protect you, your future…and your planet.

Whenever you have to repair an air conditioning system, first you must recover the refrigerant – unless a hose blew out, in which case it took care of draining the refrigerant for you. But let's assume you have to empty the system. Here's how to recover the refrigerant from the air conditioning system in *8 simple steps:*

Step 1: Identify what kind of system you're working on – remember, R12 and R134a equipment must remain isolated to prevent contamination.

Step 2: Connect your recovery unit service hoses to the air conditioning service ports. The hoses should have shutoff valves within 12 inches of the service ends.

Step 3: Operate the recovery machine according to the manufacturer's directions. This usually means opening both gauges and hose valves and turning the machine on.

Step 4: Let the system empty all the way, until you have a vacuum.

Whether you're using gauges or a recycling machine to service or diagnose a system, you must have shutoff valves no more than 12" from the ends of the hoses.

If you're working on a CCOT system, remember, oil in the accumulator can trap refrigerant in the system. As the system warms up, it will release the trapped refrigerant suddenly. You can help the accumulator release trapped refrigerant by warming it with a handheld hair dryer.

Step 5: Shut off the recovery machine and wait 5 minutes.

Step 6: Determine whether there's any refrigerant left in the A/C system. If the system still has pressure, repeat the recovery procedure until the AC vacuum level remains stable for 2 minutes.

Step 7: Close the shutoff valves in the service lines and remove the service lines from the vehicle. If the recovery machine has automatic closing valves, make sure they're working properly.

Step 8: Measure and record how much oil is in the oil overflow bottle – that oil came out of the system during discharge. During recharging, add the correct amount of new oil to the replacement parts and don't forget to include the amount recorded previously.

Once the refrigerant's been recovered, you can open the system and make the necessary repairs.

NOTICE: If you're using a recovery machine design to recover both R12 and R134a using a common circuit, the equipment must meet SAE J1770 standards. These standards require sufficient purge time when you're switching between the different refrigerants.

Use the correct containers for storing recycled refrigerant

1. Use only "DOT CFR Title 49" containers for recycled refrigerant. Never collect, salvage or store recycled refrigerant in a disposable container. Look for the letters "DOT4BA" or DOT4BW" on the tank – that tells you the tank's been DOT approved.

2. Before using any recycled refrigerant, always check the container for air (noncondensable gases). See the section titled "Checking recycled refrigerant for use," for the proper method of checking for air.

Here's how to transfer recycled refrigerant

1. Use only containers meeting DOT approval and evacuate the container to at least 27" Hg vacuum (75mm Hg absolute pressure) before transferring the refrigerant.

2. **Never fill a container to more than 60% of its gross weight rating** (for example, 18 lbs. in a 30-lb container, and 30 lbs. in a 50 lb. container). Overfilled tanks can explode as temperatures (and pressures, remember?) rise.

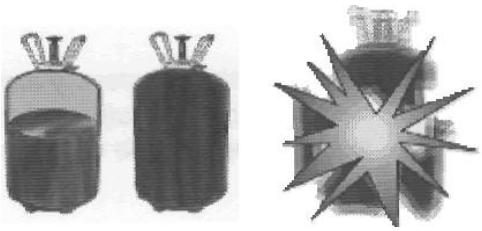

Never fill the recovery tank beyond 60% of its gross weight rating! As the temperature around the tank rises, so does the pressure in the tank. If you overfill the tank, an increase in temperature can cause the tank to explode.

Evacuate disposable refrigerant containers before throwing them away

1. Disposable containers that appear to be empty still have traces of refrigerant in them. Recover all remaining refrigerant before disposing of the container.

2. Connect the recycling unit to the empty container and recover the remaining refrigerant. Once the container shows a vacuum rather than pressure, close its valve. Mark the container "Empty," and dispose of it properly.

Checking recycled refrigerant for use

To make sure recycled refrigerant is ready for use, follow these *6 easy steps:*

1. To check for excess air (noncondensable gases), keep the container at a stable temperature above 65°F (18.3°C) for 12 hours. Store the container away from direct sunlight, and off the concrete floor.

2. Connect a pressure gauge, calibrated in 1 PSI divisions (0.1 kg/cm^2), to the container and read the pressure.

3. Measure the air temperature within 4" (10cm) of the container, using an accurate thermometer.

4. Compare the pressure to the charts below. See if the pressure is at or below the limits shown.

5. If the pressure of the recycled refrigerant is at or below the limit shown for its present temperature, the level of air in the refrigerant is okay; but always check for contamination with your refrigerant identifier.

If pressure is too high in the recycled refrigerant tank, the tank may contain too much air, or the refrigerant is contaminated. If the tank has too much air, bleed off the air, and recheck the pressures.

6. If the refrigerant pressure is above the limit shown for its present temperature, the refrigerant's contaminated; check the refrigerant with your refrigerant identifier.

   If the contamination is only air, follow the procedure that comes with your recycling equipment to purge the air from the tank. Continue until the pressure falls below the limit shown in the charts; the tank may require several purge cycles, depending on how much air is in the tank.

   If the contamination is something other than air, label the tank as contaminated, and turn it over to a reclaiming facility to be reclaimed or destroyed.

Non-Condensables Pressure Chart

Maximum Allowable Refrigerant Container Pressures

	PSIG			PSIG			PSIG			PSIG			PSIG	
°F	R12	R134a	°F	R12	R134a	°F	R12	R134a	°F	R12	R134a	°F	R12	R134a
65	74	69	75	87	85	85	102	100	95	118	118	105	136	139
66	75	71	76	88	86	86	103	102	96	120	120	106	138	142
67	76	73	77	90	87	87	105	103	97	122	122	107	140	144
68	78	74	78	92	88	88	107	105	98	124	125	108	142	146
69	79	75	79	94	90	89	108	107	99	125	127	109	144	149
70	80	76	80	96	91	90	110	109	100	127	129	110	146	151
71	82	77	81	98	93	91	111	111	101	129	131	111	148	153
72	83	79	82	99	95	92	113	113	102	130	133	112	150	156
73	84	80	83	100	96	93	115	115	103	132	135	113	152	158
74	86	83	84	101	98	94	116	116	104	134	137	114	154	160

If tank pressures are higher than shown, chances are you have excess air trapped in the top of the tank. Bleed the air off and recheck the pressure. If pressures are still too high, check the refrigerant with a refrigerant identifier.

Evacuating the System

One procedure you can perform to make sure an A/C system will work well for a long time is to evacuate it. Evacuating means pumping the system down into a vacuum of nearly 30" Hg for at least 30 minutes, to remove any air and a small amount of moisture in the system.

To keep your equipment working properly, always follow the manufacturer's service recommendations.

It's important to keep the system as moisture –free as possible, because, as the refrigerant pushes through the expansion valve, it becomes very cold. Any moisture in the system will freeze when it gets to the expansion valve. "The system works fine for about 10 minutes. Then it starts blowing warm air. If I shut it off for about 10 minutes and turn it back on, it blows cold again…for about 10 minutes." This is a classic symptom of moisture in the air conditioning system.

The easiest way to prevent moisture in a system is to keep all refrigerant lines sealed when you open the system. Another recommendation is to replace the receiver/drier or accumulator on any system that's been open for a long time, or is getting major repairs, such as a new compressor. That's because evacuating won't remove moisture trapped in the desiccant. Remember, the desiccant is your best protection against moisture. When in doubt, replace the receiver/drier as it is less costly than a compressor.

Water Boils under a Vacuum

System Vacuum Inches Hg	Boiling Point Degrees F
24.04	140
25.39	130
26.45	120
27.32	110
27.99	100
28.50	90
28.89	80
29.18	70
29.40	60
29.66	50
29.71	40
29.76	30
29.82	20
29.86	10
29.87	5
29.88	0
29.90	-10
29.91	-20

Whether you're replacing the receiver/drier or not, always evacuate the system whenever you open it to the atmosphere. Here's how:

Step 1: Connect your vacuum pump to the service ports.

Step 2: Open both valves all the way – remember, by this time the system should be empty. Never evacuate a system until all the refrigerant's been recovered.

Step 3: Let the system evacuate for at least 30 minutes, then hold vacuum for five minutes.

Step 4: After the system's evacuated for 30 minutes, close the valves. If the system loses more than two inches of vacuum in five minutes, there's probably a leak in the system or your servicing equipment.

To pull a good vacuum, you need a good pump…

Not all pumps are created equal – pumps have ratings, in cubic feet per minute (CFM). CFM indicates the capacity of the pump and microns tells you its ability to create a deep vacuum.

Some evacuation pumps don't have the power to pull the vacuum low enough to evacuate the system properly. That's why it's important for you to check the specification on any evacuation pump you're using, to make sure it'll provide enough vacuum to prepare the system you're working on properly.

In addition, many pumps suffer from lack of maintenance; most evacuation pumps have a crankcase, just like your car's engine. This crankcase has to be drained regularly, and the oil replaced, to keep the pump working up to specifications. In a busy shop, you may have to change the evacuation pump's oil as often as once a month!

Failure to change the oil can allow the oil to become thin, and reduces the pump's ability to pull a good vacuum. Very often, just changing the oil in the pump is all that's necessary to get the pump working like new again. Always follow the manufacturer's recommendations for any maintenance on your evacuation pump and always use approved vacuum pump oil.

Evacuation pressure depends on altitude…

So far we've been looking at how lowering pressure lowers water's boiling point. But the numbers we've been looking at depend on a specific altitude; in this case, sea level.

If you're working at a higher altitude, your evacuation pump won't be able to pull as much vacuum as it could at sea level.

LCD Vacuum Gauge

Just changing the oil in the pump is often all that's necessary to get a pump working like new again. Always follow the manufacturer's recommendations for any maintenance on your evacuation pump.

Charging the System

There are several systems you can use to charge the A/C system:

- Temperature compensated charging cylinders
- Electronic weight scales
- Charging station

CAUTION: *Before charging any recycled refrigerant, make sure there's no air in the tank. You must purge the air to keep from charging too much noncondensable gas into the vehicle A/C system.*

Because of the possible mixing of different refrigerants, it's important that you have a dedicated set of service equipment for each system. This prevents the possibility of system contamination.

Regardless of which charging system you're using, there is one rule that remains constant about A/C system charging: Never open the high side with the system running! The pressures on the high side can become high enough to blow the refrigerant container apart. To prevent system damage or bodily harm, always charge a running A/C system through the low side.

There are two main ways to charge any system:

- Through the high side, as a liquid, with the system off
- Through the low side, as a gas, with the system running.

No matter which type of system you're using to charge the vehicle, it charges the A/C system one of these two ways.

Charging stations with some type of heater, such as the temperature compensated cylinders or the units with a heater blanket, will usually provide a means of measuring out the proper charge, and charging the entire system through the high side, with the system off. Heating the refrigerant provides the pressures necessary to force the entire charge into the vehicle as a liquid, through the high side, without starting the engine.

Systems without any type of heater won't be able to push all of the refrigerant necessary into the system themselves. With these systems only some of the refrigerant will get into the A/C system through the high side. To get the rest of the charge into the system, you'll have to start the engine, and allow it to pull the refrigerant in, as a low pressure gas, through the low side.

How much refrigerant does the system require?

In the old days of A/C service, most systems were easy to fill: You just added R12 to the system until the sight glass was clear. Those early systems had a large capacity and extra storage, so accuracy wasn't as critical as it is today.

Today's systems are smaller and hold less refrigerant than early A/C systems. Most systems hold about two pounds (or less), as opposed to three or four pounds of early systems. But this new found accuracy comes at a price: Charge levels are more critical than ever before. A few ounces too little or too much can have an enormous effect on the system performance.

The best way to be sure that the system you're working on has an accurate charge is to drain the system completely, and then measure out the exact amount of refrigerant the system requires.

Charging Procedures

Important: *Every charging station has its own particular procedures. Always read the directions that came with your charging station, and follow them precisely.*

With many charging stations, the station controls whether the refrigerant enters the system as a gas or a liquid. But on other systems, such as the units that provide a weight scale for measuring how much refrigerant goes into the system, you have to decide how to deliver the refrigerant.

Recharge the system with the exact amount of refrigerant specified on the decal. Recharge either with a recovery unit, an A/C charging station or an electronic weight scale.

If you set the R134a cylinder so the valve faces up, the refrigerant will leave the cylinder as a gas. If you turn the refrigerant cylinder over, so the valve is at the bottom, the refrigerant will leave the cylinder as a liquid.

In general, the only time you should charge the refrigerant in liquid form is with the system off. Usually the only time you'll do this is when the system is completely empty, and evacuated properly.

During this situation, you can set the can upside-down, and allow pure liquid refrigerant to enter the system through the high side port. *This is the only time you should ever try to charge the system through the high side!*

Once the refrigerant level stabilizes, you'll probably have to add a bit more to finish filling the system. *Shut the high side valve off before going any further.*

Then turn the refrigerant cylinder over, run the A/C system, and finish filling the system through the low side port as a gas.

Never add more refrigerant than is listed on the system capacity tag. Refrigerant levels are very critical in today's systems; overfilling the system – even slightly – can have a dramatic effect on system operation.

Improper Charging Procedures

Charging the system through the low side as a liquid allows the system to charge much faster, but can damage the compressor if that liquid makes it into the compressor. This is called *liquid slugging.*

If the low side port is fairly far away from the compressor, you may get away with charging the system this way, because the refrigerant has time to expand before reaching the compressor. But if the low side port is near the compressor, charging the system with liquid refrigerant could destroy the compressor.

Another way to damage the compressor is to charge liquid refrigerant through the low side with the engine off. You might think this would be okay, but this procedure has the unexpected side effect of washing all of the lubricant from the compressor. Then, when you start the system, the compressor runs without any lubrication. Though in many cases, it won't run that way for long!

To prevent damaging the system, always follow the procedures for charging the A/C system.

General Air Conditioning Charging Guide
Refrigerant R-134a

Safety Precautions & Warnings:

1) Charging of an air conditioning system should be conducted by a qualified a/c technician.
2) Always wear the proper protective eyewear and clothing before working on any air conditioning system.
3) Always wear work gloves when working with condensers or evaporators. The aluminum edges can be sharp, and cause serious cuts.
4) Always use DOT-approved tanks for storing refrigerants.
5) Always provide plenty of ventilation when working with refrigerants. Avoid breathing refrigerant vapor, or lubricant mist.
6) Never use compressed air to leak test or pressure test an R134a system. Under certain conditions, pressurized mixtures of R134a and air can be combustible. In addition, shop air injects moisture into the system.
7) Always use mineral oil to lubricate O-rings, even on R134a systems.

Recommended Tools:

1) Safety glasses and work gloves.
2) Thermometer
3) R134a Refrigerant
4) Compressor oil (if needed)
5) Mineral oil to lubricate o-rings
6) Manifold Gauge Set – similar to RD-5-11104-0P
7) Vacuum Pump – similar to RD-5-11118-0P
8) Charging Scale – similar to RD-5-11153-0P
9) Alternately a Recovery/Charging Station similar to RD-5-11087-0P can be used instead of items 6, 7 and 8 above.
10) Thermistor Vacuum Gauge Sensor – similar to RD-5-11115-0P
11) Alternate charging technique- infrared temperature sensor

Field Charging Procedure:

1) Insure all fittings are tight and components installed correctly.
2) Attach manifold gauge set to high and low side service ports. The blue coupler attaches to low pressure charge port and red coupler attaches to high pressure charge port.
3) Attach yellow (center) hose from manifold gauge set to vacuum pump.
4) Attach Thermistor Vacuum Gauge to a/c system not at the vacuum pump. The reading at the vacuum pump may not give an accurate indication of the true vacuum in the a/c system.
5) Start vacuum pump.
6) Open both red and blue (high and low side) valves on manifold gauge set.
7) Let vacuum pump run until thermistor vacuum gauge reads 1000 microns. Then run an additional 15 minutes.
8) Close red and blue valves on manifold gauge set.
9) Monitor pressure reading on thermistor vacuum gauge for 10 minutes with vacuum pump off and manifold gauge valves closed. Reading should be between 1000 and 400 microns and should not climb above 1000 microns.
10) If pressure in a/c system rises above 1000 microns the system has a leak and needs to be repaired prior to charging system.
11) **After verifying the system has no leaks, remove thermistor vacuum gauge.** Vacuum gage may be damage if pressurized above atmospheric pressure.
12) Attach yellow hose from manifold gauge set to refrigerant.
13) Place refrigerant tank upside down on charging scale. (Yellow hose should be attached and tank valve open.)
14) Zero charging scale measurement.
15) Open red (high side) valve on manifold gauge set and add the factory recommended charge amount. **Close red valve on manifold gage set.** Charging is complete. Verify proper a/c operation. Document total refrigerant added to system and apply appropriate label near compressor stating refrigerant charge amount.
16) If the proper refrigerant charge amount is not known, add one to two pounds of liquid refrigerant to the system through the high side port (red). The amount of refrigerant added depends on the estimated full charge amount. It is typically ½ to ¾ of the estimated full charge. **Close red valve on manifold gauge set**. This type of refrigerant charging should be done at an ambient temperature of 32°C (90°F) or greater with machine doors open to provide a load on the evaporator.
17) Turn refrigerant tank right side up on charging scale (vapor charge position).
18) Start machine engine and turn on a/c system.

19) Record ambient temperature, evaporator inlet temperature, evaporator air outlet temperature, suction pressure and discharge pressure.
20) If suction pressure is 5 psig or less, keep engine speed at idle until additional refrigerant has been added and suction pressure exceeds 5 psig.
21) Slowly open blue valve on manifold gauge set and bleed vapor refrigerant into low side of system in small increments (0.1 to 0.2 lbs at a time). Suction pressure should not exceed 50 psig while charging vapor into the low side of the system or the compressor can be damaged.
22) Continue to add refrigerant in this manner in small increments until optimum a/c performance is achieved.
23) Document total amount or refrigerant added to system and apply appropriate label near compressor stating refrigerant charge amount.

Alternate Charging Technique:

1) Perform steps 1- 20 above.
2) With an infrared thermometer measure condenser tube temperatures from refrigerant inlet to refrigerant outlet (typically from top to bottom).
3) The temperature will be highest at the refrigerant inlet (superheated region). Then the temperature will decrease to the saturation temperature of the refrigerant at the operating discharge pressure (saturation or condensing temperature). Near the outlet of the condenser the temperature should once again decrease by roughly 8 to 12°F (6 to 8°C) below the saturation temperature (sub-cooled region).
4) If the refrigerant at the outlet of the condenser is not sub-cooled by 8 to 12°F (6 to 8°C) below the saturation temperature, continue to add vapor refrigerant in small increments through the blue (low side) charge port.
5) When 8 to 12°F (6 to 8°C) of condenser outlet sub-cooling is reached, verify proper a/c operation.
6) Document total refrigerant amount added to system and apply appropriate label near compressor stating refrigerant charge amount.

Typical Manifold Gauge Set

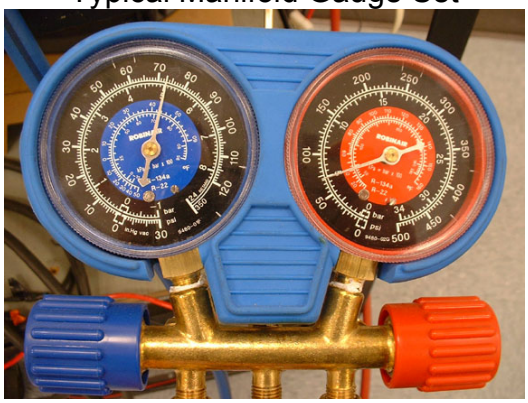

Refrigerant Guide

Refrigerant Oil Retained in System Components

The amount of oil typically retained in system components is shown here. The amount will vary with component size and design.

Component	Typical Amount of Oil	
Evaporator	2.0 fl.oz.	60 cc
Condenser	1.0 fl.oz.	30 cc
Receiver Drier	0.5 fl.oz.	15 cc
Accumulator	2.0 fl.oz.	60 cc

Refrigerant Oil Amount Based on Charge Quantity (TXV System)

AC System with *less than* 3.5 pounds of R134a

Five cylinders or less: [R134a (lbs) x 2] + 1.35 = Total Oil Charge (oz)

Seven cylinders or more: [R134a (lbs) x 1.07] + 2.4 = Total Oil Charge (oz)

AC System with *more than* 3.5 pounds of R134a

On Vehicle Testing Recommended

Conversion Factors

Pounds to ounces: (lb) x 16 = (oz)

Ounces to cubic centimetres: (oz) x 29.6 = (cc)

RD-5-12561-0 Rev–

Copyright ©2009 Red Dot Corporation

Refrigerant charge amount per foot of hose length change for TXV system (pounds)

Hose size and Location	Charge Factor	Refrigerant Hose Length in feet (results in decimal pounds rounded to the nearest hundredth)									
High Pressure Vapor	lbs per ft →	1′	2′	3′	4′	5′	6′	7′	8′	9′	10′
#8 (13/32″ ID)	0.0043	0.00	0.01	0.01	0.02	0.02	0.03	0.03	0.03	0.04	0.04
#10 (½″ ID)	0.0065	0.01	0.01	0.02	0.03	0.03	0.04	0.05	0.05	0.06	0.07
High Pressure Liquid	lbs per ft →	1′	2′	3′	4′	5′	6′	7′	8′	9′	10′
#6 (5/16″ ID)	0.0346	0.03	0.07	0.10	0.14	0.17	0.21	0.24	0.28	0.31	0.35
#8 (13/32″ ID)	0.0584	0.06	0.12	0.18	0.23	0.29	0.35	0.41	0.47	0.53	0.58
Low Pressure Vapor	lbs per ft →	1′	2′	3′	4′	5′	6′	7′	8′	9′	10′
#10 (½″ ID)	0.0011	0.001	0.002	0.003	0.004	0.005	0.007	0.008	0.009	0.010	0.011
#12 (⅝″ ID)	0.0017	0.002	0.003	0.005	0.007	0.009	0.010	0.012	0.014	0.015	0.017
#14 (¾″ ID)	0.0025	0.002	0.005	0.007	0.010	0.012	0.015	0.017	0.020	0.022	0.025
#16 (⅞″ ID)	0.0034	0.003	0.007	0.010	0.013	0.017	0.020	0.024	0.027	0.030	0.034

R134a amount in pounds

Formula for R134a per Hose Length: Hose length (ft) * Charge Factor = R134a (lb)

Vapor line changes have minimal impact on refrigerant charge

Liquid line changes have greater impact on charge (rule of thumb: ½ oz per foot of #6 liquid line)

Condenser changes can have a significant impact on system charge

Copyright ©2009 Red Dot Corporation

System Flushing

Most A/C system manufacturers don't recommend A/C system flushing. Instead, they recommend replacing components and installing in-line filters.

Aftermarket Flush Kit

However, there are two flushing methods in use today that may remove contaminants, debris and old oils out of the system:

- Closed loop flushing with liquid refrigerant
- Solvent-based flushing

Some shops will perform a closed loop liquid refrigerant flush when they feel it's necessary. This method uses the same refrigerant for the system, and the same charging and recovery equipment. This method circulates liquid refrigerant through the lines and heat exchangers. You should connect an external filter, to catch any debris before it reaches your recycling equipment.

Flushing tube-and-fin evaporators and condensers may successfully get rid of some debris. But evaporators with multiflow circuits, such as plate-fin evaporators and serpentine evaporators and condensers, present another problem. On these components, the flush will take the path of least resistance, and may not clean the component thoroughly.

An important point to remember is that flushing an A/C component with air, nitrogen or some other vapor is never satisfactory. Flushing solutions must be liquid, and must get to all parts of the component, to be effective. A good analogy to think of is how much more difficult it might be to stand in a 5 MPH river current than a 30 MPH wind.

It's imperative that no flushing liquid remains in the system after you're done. Flushing liquid can have a chemical effect on O-rings and seals, and hurt the long-term chemical stability of the A/C system.

Solvent-Based Flushing

Once you have the system flushed, purge it with clean, dry air, and let it dry out for at least a half hour before closing the system. That gives any leftover solvent a chance to evaporate, and leaves the system clean and dry, and ready to go back to work.

A/C Flush Fluid

Always check the local, state and federal ordinances for disposing of used flushing solvent. While the new solvent may be environmentally safe and biodegradable, the used solvent contains all of the old oil and contaminants that were in the system. That could turn the solvent into a hazardous waste, and may require special procedures for disposing of it.

And always replace the oil in the system after flushing. The flushing procedure removes all of the oil that was in the evaporator and condenser. If you're replacing the

accumulator and the compressor, chances are there's no oil left anywhere in the system. Check your shop manual for how much oil the system contains, and replace the oil before you run the system.

System flushing is somewhat restrictive; you can't flush every part of the A/C system. And there's no reason to: In most cases, you'll only flush a system while replacing certain components. You wouldn't want to flush contaminated fluids through a brand new part.

In general, the only parts you can flush are the heat exchangers: the evaporator and the condenser. Never run a flushing solvent through the accumulator or receiver/drier, the compressor, the expansion valve or orifice tube.

So flushing should be restricted to the evaporator, condenser, and any metal lines. In addition, when the system's been contaminated, replacing the accumulator or receiver/drier is always recommended.

With an expansion valve, you'll have to use your own judgment. If the valve looks okay, and seems to work okay, you may want to leave it alone. But if there's any question about the expansion valve's condition, you should replace it while replacing the compressor and the receiver/drier.

While flushing is a great way to clean out old oil and debris in the air conditioning system, it doesn't necessarily remove all of the debris in the system. Very often, some of that debris gets trapped in the small, winding passages in the condenser or the evaporator. Then, after you charge the system and let it run, that debris can break free, and work its way back to the compressor, where it can do the most damage.

The best way to prevent that debris from getting back to the compressor is to install an in-line filter in the liquid line, between the condenser and the expansion valve or orifice tube.

Never use these chemicals to flush…

R11 (CFC11) – It causes corrosion problems after retrofitting to R134a, even in trace amounts. Venting R11 is illegal since it contains chlorine. R11 has been phased out, so it isn't readily available. And, if you were to have R11 available, you'd have to recover it, just like any other CFC. Depending on the system, R12 or R134a works just as well, and you can recycle that through your dedicated recycler.

Denatured alcohol and trichloroethane – Its residue will ruin a retrofit job and legally you must recycle it. Your existing R12 and R134a machine won't handle denatured alcohol or trichloroethane.

Methyl chloroform (1,1,1, trichloroethane) – Readily absorbed by the hoses, methyl chloroform causes rapid lubricant decomposition with either PAG or ester lubricants. Methyl chloroform chemically attacks the copper surfaces, which guarantees compressor failure. In testing, researchers were unable to get most of the methyl chloroform out, even with extended deep vacuum pumping.. Use methyl chloroform for its intended purpose – cleaning brake and electrical contacts.

Table of Contents

A/C System Diagnosis:

Leak Testing

Diagnostic Procedure Worksheet

System Function Tests

Gauge Hookup

System Service Valves

System Performance Test

Diagnosing an Expansion Valve System

Diagnosing a CCOT System

Leak Testing

Probably the most common problem you'll run into on air conditioning systems is low refrigerant level.

One of the rules of air conditioning is that refrigerant doesn't just disappear – if the system's low, it must have a leak.

There are several ways to run a leak check:

- Look for oil stains, bubbles or listen for a hissing sound
- Use an electronic leak detector
- Use a blacklight sensitive dye

Two excellent ways to locate refrigerant leaks are with an electronic leak detector or a black light system. Remember, leak detectors for R12 may not detect leaks in an R134a system. If the label says it meets the SAE J1627 standard, you can use it for both refrigerants.

Look for a leak in the system. Large leaks will probably be obvious; to start with, the system will probably be completely empty. You'll have to add about a pound of refrigerant to find a leak on a totally empty system. To perform an accurate leak test, you need about 7 to 15% of the total system charge. This gives the system a saturated pressure above 50 PSI.

After you have an adequate charge, then look for the leak: You may hear it hissing, or see it bubbling. A little soapy water will help you pinpoint those large leaks – this is a great way to check for fitting leaks. Don't forget to recover the refrigerant after you find the leak.

And don't forget the service fittings; your gauge set will mask this type of leak. Always check the fittings for leaks after removing your gauges, and don't forget to install the threaded caps – the caps, not the valves, are the primary seal for the service fittings.

Oily stains or caked-on dirt in a specific location are good indicators of refrigerant leaks.

Always check the bottom of the evaporator housing for oil. When the evaporator leaks, oil runs to the same opening as condensation. The oil soaks the bottom of the evaporator housing. But not every leaking evaporator will be oil-soaked. If the system's been running a little low on oil, there might not be enough oil to wet the case.

Notice: *On R134a systems, you may not find any evidence of oil, even with a leak, because the lubricant is water soluble, and could wash away.*

Warning: *Never use compressed air to leak test or pressure test an R134a system or R134a service equipment. Under certain conditions, pressurized mixtures of R134a and air can be combustible. Always follow the proper procedures to prevent the potentially dangerous mix of air and R134a. In addition, shop air injects moisture into the system, and a pressure surge could damage the evaporator.*

Hose leaks won't always be accompanied by obvious damage. If the hose appears oil, wipe it dry and watch it for a few seconds. If you see an oily stain begin spreading on the hose, there's a good chance it's become porous – replace it.

Using a Leak Detector

Warning: *Always check the refrigerant in the system before using a leak detector; some leak detectors use a technology that could ignite flammable hydrocarbon refrigerants.*

Electronic leak detectors enable you to find leaks as small as a couple of ounces of refrigerant per year. Early R12 detectors can't detect R134a…make sure you're using the right type of leak detector for the system you're working on.

Not every leak is going to jump out at you; to find smaller leaks you'll need to use a leak detector.

The most accurate method to check for leaks is an electronic leak detector. In some cases these units use a small vacuum pump to draw air samplings past the sensor, enabling you to find leaks as small as a couple ounces a year. When the sensor detects refrigerant, it beeps to let you know it found a leak.

Here's how to use a leak detector to find leaks:

Make sure you have enough refrigerant in the system to show the leak. A few ounces – enough to bring the system to around 7% to 15% of its normal charge – should usually be enough. Once some of the refrigerant in the system remains a liquid, the pressure won't increase by adding more refrigerant; this is called the "saturated pressure."

Turn the leak detector on, and slowly run the detector wand along the system, paying particular attention to the fittings, seals and hose joints. Run the detector all the way around the lines – remember, the leak could be anywhere, even though refrigerants are heavier than air.

Make sure you have the charging hoses disconnected while running a leak check – that way you can check the Schraeder valves for leaks, too. Remember to install the threaded caps when you're done.

And don't forget the evaporator. Place the detector by the drain hole – leaking refrigerant will head right for that opening in the bottom of the case.

Think you may have a small evaporator leak? There are a couple ways to check: You can remove the blower resistor to get access to the evaporator with your probe.

Or let the system sit with the blower on high for about 15 seconds to clear out any refrigerant built up in the ducts. Then turn the blower off and wait a few minutes; the directions with your leak detector should specify how long to let the system sit. This allows any leaking refrigerant to build up in the evaporator housing, and set off your leak detector.

Another common place to look for leaks is at the pressure switches – refrigerant often leaks past the plastic, along the electrical connectors or adjustment screws. Unplug the electrical connectors, and give the switch a careful going-over.

Once you find the leak, make the necessary repairs, recheck, evacuate and recharge the system.

Remember, low side system pressures are higher when the system's off. Finding a small leak on the low side is often easier when the compressor isn't running.

Types of Leak Detectors

There are two main styles of electronic leak detectors available today:

- Corona Discharge
- Heated Diode

Heated diode units only respond to halogens, so they tend to be less likely to false trigger than the corona discharge unit. But heated diode units require more power than the corona discharge leak detector; the battery-powered heated diode units will usually operate for about two hours before requiring recharging.

On the other hand, corona discharge units tend to be less costly, and will operate for a long time on flashlight batteries; heated diode units require much more power to operate than corona discharge units. A corona discharge unit can work fine – and they're easy to use, especially when it has an adjustment to control its sensitivity.

Most leak detectors require periodic maintenance procedures to keep them operating properly. Always read and follow the recommendations in your instruction manual.

Black Light Leak Detectors

Another way to look for leaks is to inject a dye in the system, and shine a black light along the lines, fittings and seals.

Warning: *Always wear the protective goggles that come with your black light leak detector. These goggles protect your eyes from damage caused by ultraviolet light from the black light. In addition, the goggles enhance the luminescence from the dye, to make leaks easier to spot.*

One way to make your leak-finding chores easier is with a black light. You inject a small amount of dye into the air conditioning system, and run the black light along the system lines and fittings. Any leaks in the system will show up a luminous green.

Leaks will show up as luminous green or yellow under the black light. This is a good way to find extremely slow leaks, or leaks that only occur during special circumstances, such as driving vibrations or road shock. These leaks won't appear during normal leak

checks; in many cases, the only way you'll be able to find them is by adding a dye to the system.

Remember, the oil used in R134a systems is water soluble. So in some cases, leaks that would have been obvious on R12 systems, due to an oil stain on the components, could easily wash away before you have a chance to find it.

Always use to correct dye for the system you're working on – R12 uses a completely different type of dye than R134a systems. Both dyes work the same way for indicating leaks, but the two dyes aren't compatible.

Never add more than one bottle of dye to a system. One bottle is enough to highlight a leak; two won't make the leak any more visible, and could thin out the oil in the system enough to damage the compressor.

Once you find the leak, repair it – then evacuate and recharge the system. Then clean off any residual dye from the components: Otherwise, you're likely to find that dye later, and be fooled into thinking you found a leak, where no leak exists.

Look for additional information regarding procedures for using refrigerant leak detection dyes in SAE J2298 procedures.

Identifying System Leaks

- <u>Comparing Electronic Leak Detectors</u>

- J1627
  - Required only 1 range scale
  - Identify 0.5 ounce/year @ 1/4 inch

- J2791
  - New test procedure for certification
  - Requires at least 3 selectable ranges
  - Identify 0.15 ounce/year @ 3/8 inch

Diagnostic Procedure Worksheet

Complaint:

☐No A/C ☐Insufficient A/C ☐Odors/Leaks

☐Noise ☐Other_____

1. When does the complaint occur?

☐Always ☐Other_____

2. Temperature/conditions when complaint occurs:

☐Always ☐70° – 90° ☐90° ☐High temperature/High humidity

3. Equipment condition/maneuver when complaint occurs:

☐Always ☐Engine idling ☐Under load ☐Other_____

System Function Test

1. Blower Fan Operation:

☐OK ☐No high blower ☐Missing speeds ☐Other_____

2. Air Distribution:

☐OK ☐No defrost ☐No panel ☐No floor

No recirculation Other_____

3. Temperature Controls:

☐OK ☐No temp change ☐Control level problem

☐Other_____

4. A/C Function:

☐OK ☐No clutch operation ☐Clutch operates; no temp change

☐Clutch operates; some temp change ☐Other_____

Supporting Systems

1. Electric Cooling Fan (Condenser):

☐OK (Fan comes on with A/C) ☐Fan operates continuously with no A/C clutch operation

☐Fail (Fan doesn't come on with A/C) ☐Other_____

2. Cooling System:

☐OK ☐Signs of overheating ☐Other_____

3. Heater Control Valve (if applicable):

☐OK ☐Stuck open ☐Not being controlled ☐Other_____

Repair Service Recommendations

1. Electrical diagnosis of: ☐Fan Blower Motor ☐A/C Clutch ☐Electric Cooling Fan

☐Other_____

2. Diagnose ventilation system: ☐Air Distribution ☐Temperature Controls

☐Other_____

3. A/C refrigerant system: ☐Performance Test ☐Leak Test

☐Other_____

All diagnosis, service or repairs to the refrigeration system of automotive air conditioning systems should only be performed by a Certified Refrigeration Technician, and should follow all procedures for refrigerant recovery and recycling, using only certified repair equipment, as provided in local, state and federal laws, requirements and provisions. No part of this program should be construed to recommend any service procedure contrary to those laws or provisions.

System Function Tests

Begin by asking for a complete description of the complaint

One of the most important things to remember when attempting to diagnose any problem is always make sure you understand the operators' complaint thoroughly. It doesn't matter how good a job you do or how many problems you take care of…if you didn't address the operators' original complaint, you didn't do the job correctly.

If it's possible, have the operator accompany you during the initial tests, to confirm whether the symptoms you experience are the ones he or she is complaining about.

Find out if anyone else worked on the system recently – this is important if you think the system could be contaminated with something other than the intended refrigerant. If you suspect a system's been contaminated, you can have the refrigerant analyzed. Avoid mixing contaminated refrigerant with other refrigerant – that will contaminate the whole tank, and could contaminate your recycling machine.

Once you know exactly what the operators' complaint is, you're in a better position to diagnose the complaint correctly.

Now it's time to try the air conditioner

By this time you know the operator's complaint; begin your diagnosis by turning the air conditioner on, and see if it goes through the motions of working, while the operator's still around.

Start the engine, and set the air conditioning controls on. First try the fan – make sure it's coming on, and it works on all the speeds. Keep in mind that some vehicles don't have low fan when the engine's cold.

Once you're sure the fan works okay, run through the controls.

If all the controls seem to be working properly, set the air conditioner to Maximum Air, with the fan on High. You should hear the compressor turn on, and within a few moments the air should become cold. Don't try to check the system performance yet – for now, all we want to know is whether the compressor turns on.

Then inspect the system visually

Your next step is to make a complete visual inspection of the air conditioning system. Examine the condition of the belts and hoses, for both the air conditioning and the engine.

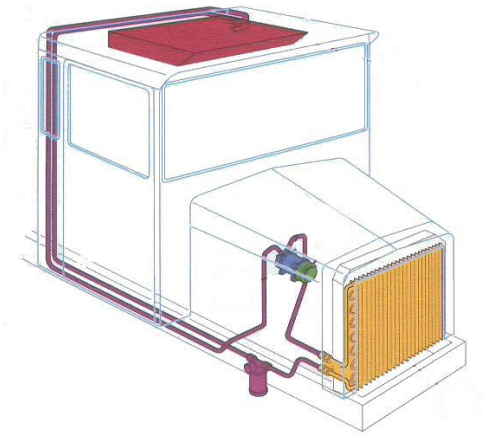

Make sure the service ports all have caps screwed on. These caps are the primary seal for service ports. If any caps are missing, you must replace them as part of the service. Those caps are more than dust covers – they help prevent refrigerant from escaping into the atmosphere.

All the caps for the service ports screw on, and each cap has an O-ring inside. These caps are the primary seal for service ports.

Look for oil stains or caked-on dirt along all exposed air conditioning system parts and hoses; these can be indications of a refrigerant leak. Check the bottom of the evaporator housing – if the evaporator leaks, refrigerant oil may soak the bottom of the housing around the evaporator drain. An oil-soaked evaporator housing is a good indication of a leak in the evaporator.

Finally, make sure the condenser is clear and clean. Leaves, trash, mud and large numbers of insect corpses can reduce air flow over the condenser coils. Good condenser combs can help to clean and straighten the fins. You may not be able to see it, but any coating can destroy the system's ability to transfer heat. Water works great to remove that caked-on mud and silt.

If the compressor doesn't come on…

…in most cases, the system is probably just low on refrigerant – the Low Pressure Cutoff Switch is open, so current can't reach the compressor clutch to turn it on. You can do a quick system check on any system by unplugging the compressor and running a fused hot lead directly from the battery and ground wire. This provides a rough indication of the compressor and system operation.

If the compressor clutch kicks in okay when you bypass the controls, you know the compressor *can* engage; next you'll need to see why the controls wouldn't let the compressor engage. Is the Low Pressure Cut-Off Switch bad or is the system low on refrigerant? Most of the time the system will just be low on refrigerant. If that's the case, you'll have to run a leak check on the system, take care of any problems you find, and recharge the system.

While the tests we've looked at so far look like a lot of work on paper, once you get used to them you should be able to run through all these checks in a matter of a minute or two. But these quick tests serve a real purpose: they enable you to get a clear picture of the overall system condition. The object is to check the easy things first, before you waste any time or money on the more complex, time-consuming tests.

Gauge Hookup

As long as the air conditioner comes on…

…you know the system's going through the motions of working. It's time to run a system performance test. In order to run a system performance test properly, you're going to have to hook up your air conditioning pressure gauges. Follow these directions for hooking up your pressure gauges.

Air conditioning pressure gauge hookup procedures

Warning: *Always wear safety goggles when working with a refrigerant system. If refrigerant gets in your eye, it can freeze your eyeball, causing permanent damage or blindness.*

Whether you're using a set of handheld gauges or a charging station, there are different gauges you're going to be working with; the low-side gauge, which reads from 30" vacuum to 150 PSI, and the high-side gauge, which reads from 0-500 PSI. Each gauge has a hose that hooks to the service port of the air conditioning system.

Before you start hooking up your gauges, you have to identify which port is the high side and which is the low side on R12 systems.

The low-side port will be somewhere between the expansion valve or orifice tube outlet and the compressor.

The high-side port will be somewhere between the compressor discharge and the expansion valve or orifice tube inlet.

Notice: *Some systems won't have both service ports. In those cases, a switch port may provide a substitute access for the pressure gauge reading.*

Some systems will put their service ports right on the compressor – if it isn't obvious which is which, the ports should be marked as Suction, or "S" (low side) and Discharge, or "D" (high side).

A/C Service Valves (R12 Systems)

There are various types of service ports being used on A/C systems to prevent cross-contamination and aid in system servicing: stem-type shutoff valves, Schraeder valves, GM high-side service vales and R134a quick coupler-type valves.

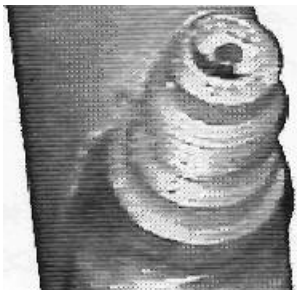

Air conditioning Schraeder valves look just like tire valves – but never us a tire valve to replace an A/C Schraeder valve. Make sure every system has screw-on caps on each service valve. The cap is necessary to prevent leaks. If a system comes in without caps, replace them.

The most common type of valve is the Schraeder valve – these look just like tire valves, but never us a tire valve to replace an air conditioning Schraeder valve. Air conditioning Schraeder valves are made with different seals to work with air conditioning refrigerant. A tire valve won't hold up long, and will leak refrigerant.

The lines from your gauges have a small pin in the center to depress the Schraeder valve as you attach the lines to the test port. The low-side line should thread right on to the low-side port; on most cars built since about 1975, the high-side port is a different size – you'll need an adapter to connect your gauges to it.

The most common use of the stem-type shutoff vale is on York and Tecumseh compressors. The stem-type shutoff valve has three positions:

Normal operating – Stem turned all the way out. Refrigerant circulates freely through the system, but the service ports are closed.

Compressor isolated – Stem turned all the way in. In this position the compressor is closed off from the rest of the system. The service ports are open. Never run the air conditioning compressor with the valves closed – the compressor's reed valves will become damaged in seconds?

System test – Stem halfway between open and closed. Turning the stems in about two turns will work well, and you won't chance damaging the compressor. Make sure you have your gauges hooked up before you turn the stems, or you'll open the system to the atmosphere.

R134a service adapters

To prevent you from accidentally adding the wrong type of refrigerant to a system, R134a systems have their own size and design service fittings. These fittings are much larger than those for R12 systems, and the adapters are a special, quick release type connector.

Now that you know how to hook up your gauges, continue with your performance test.

System Performance Test

Ambient Temperature_____

Relative Humidity: ☐30% ☐60% ☐90%

List the results you should get from a system that's working properly (you can get this information from a factory manual):

Evaporator Temp._____ High-Side Pressure_____

Low-Side Pressure_____ Auxiliary Pressure_____

- Hook your pressure gauges to the system ports – if there's a second low-side port, hook a gauge to that port as well.
- Start the engine, set the parking brake and raise the idle to between 1500 and 1800 RPM.
- Put a thermometer in the air conditioner vent nearest the evaporator.
- Set the air conditioner for maximum cooling.

If you're working on an R12 system, check the sight glass:

☐**Clear** – good indication the system's working OK, and the system pressures are probably within specs.

☐**Bubbles or foam** – refer to further specific diagnostic procedures.

Notice: *The sight glass doesn't tell you much on R134a systems. R134a usually appears foggy on a fully charged system, so the sight glass really isn't very useful. The only thing you can learn is that the refrigerant is moving or the system is contaminated.*

Check the lines for frosting:

Low-Side Lines:

☐OK

☐Frosted – indicates low refrigerant level; use the rest of your readings to confirm.

High-Side Lines:

☐OK

☐Frosted – indicates a clogged line where the frost begins; correct this problem before continuing your diagnosis.

A/C SYSTEM DIAGNOSIS

System Test Results

Evaporator Temp._____ High-Side Pressure_____

Low-Side Pressure_____ Auxiliary Pressure_____

If temperatures and pressures are within specs, the system's working normally.

If pressures are okay but evaporator temperature is high, check for a bled door or heater control valve problem, or look for a possible system oil overcharge.

If pressures vary from specs or the refrigerant is full of bubbles, refer to the appropriate page for System Diagnosis.

All diagnosis, service or repairs to the refrigeration system of automotive air conditioning systems should only be performed by a Certified Refrigeration Technician, and should follow all procedures for refrigerant recovery and recycling, using only certified repair equipment, as provided in local, state and federal laws, requirements and provisions. No part of this program should be construed to recommend any service procedure contrary to those laws or provisions.

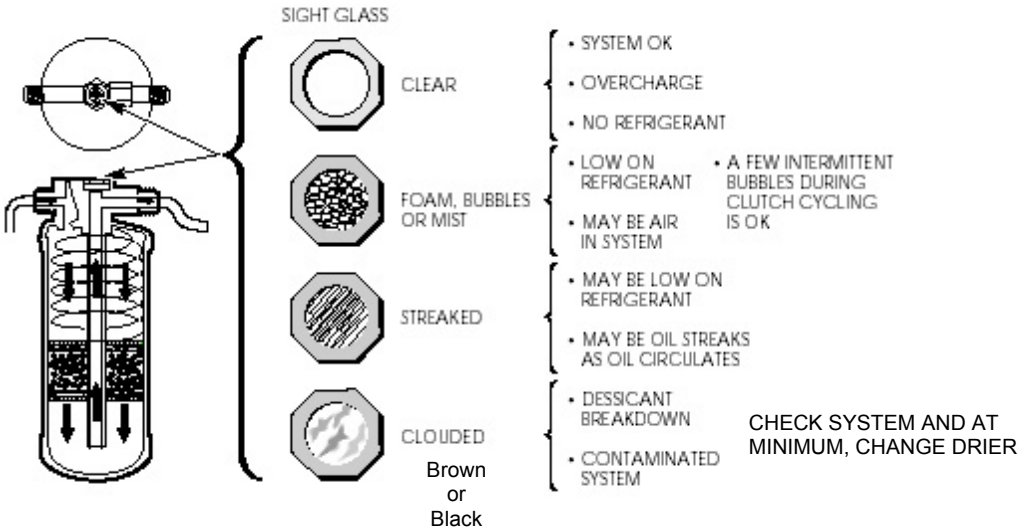

If the system has a sight glass, check it and record your results…but never use the sight glass as your final indicator for recharging the system on R-134a systems.

Diagnosing an Expansion Valve System

Refrigerant Pressure Diagnosis

Here are a couple of charts designed to help you diagnose air conditioning problems. This chart covers systems using an expansion valve; the chart on the next page covers systems using an orifice tube.

System Operating Normally – Fully Charged

Low Side	High Side	Sight Glass	Evaporator Outlet	Duct Temperature
5-30 PSI Pressure will be Higher at higher blower speeds	150-285 Low air flow past the condenser increases high side pressures	Clear – any color other than white or clear indicates system contamination	Cold – Lines sweating heavily, no frost	40° – 50°

Diagnostic Chart

Low Side	High Side	Symptoms	Diagnosis	Solutions
Low 5-30 PSI	Low 110-150 PSI	Poor or no cooling Foamy bubbles in the sight glass. Compressor cycles rapidly. Warm evaporator outlet line.	Low or improper refrigerant charge.	Check and repair any leaks in the system. Recharge system as needed.
Low or Vacuum. -20 to 5 PSI	Low to Normal. 115-160 PSI	No cooling. Sight glass is clear. Warm evaporator outlet line.	Low or improper refrigerant Bad expansion valve. Gauge reading may be Higher if the restriction is directly past service fitting.	Check the expansion valve and screen. Look for icing on the high-side lines. Clear the restriction or replace necessary components. Evacuate and recharge the system.
Normal to Low. 0-25 PSI	Normal 150-285 PSI	Unit works fine for a while, then begins to blow warm air. Evaporator pipes frozen. Compressor doesn't cycle.	Evaporator freeze-up. Bad thermostatic switch, clutch or clutch relay.	Replace thermostatic switch, clutch or clutch relay.
High or Equal to High Side gauge. 70-90 PSI	Low or Equal to Low Side gauge. 90-110 PSI	No cooling. Warm evaporator outlet pipe. Compressor won't cycle.	Expansion valve stuck open. Bad compressor.	Repair or replace compressor. Replace expansion valve. Evacuate and recharge the system.
Normal to High. 30-60 PSI	High 250-350 PSI	Fair to poor cooling Sight glass clear to foamy. Evaporator outlet cool to warm.	System overcharged.	Recover excess R12 or R134a until system operation returns to normal.
Normal to High. 30-60 PSI	High 250-400 PSI	Fair to poor cooling. Sight glass clear. Evaporator outlet cool to warm.	Restricted airflow past Condenser. High temperature air across condenser	Check cooling fan operation. Clear radiator or condenser restriction. Check for excess heat load if near hydraulic oil cooler, etc.

Diagnosing a CCOT System

Refrigerant Pressure Diagnosis

System Operating Normally – Fully Charged				
Low Side	**High Side**	**Sight Glass**	**Evaporator Outlet**	**Duct Temperature**
22-35 PSI	130-375 PSI (Depending on Fan)	None	Cold	40°-50°

Diagnostic Chart				
Low Side	**High Side**	**Symptoms**	**Diagnosis**	**Solutions**
Low to Normal 10-46 PSI	Low 120-170 PSI	Poor cooling Warm evaporator outlet line. Compressor clutch cycling rapidly.	Low refrigerant charge.	Check and repair any leaks in the system. Recharge system as needed.
Low or Vacuum. -10 to 10 PSI	Low to Normal. 90-170 PSI	Poor cooling. Warm evaporator outlet line. Compressor clutch cycling rapidly.	High side restriction. Orifice tube plugged. Gauge reading may be Higher if the restriction is directly past service fitting.	Check for a clogged expansion tube. Replace the accumulator if the system's contaminated. Evacuate and recharge the system.
Normal to Low. 5-48 PSI	Normal 185-375 PSI	No air or warm air from the ducts. Evaporator lines cold or iced.	Evaporator freeze-up. Bad thermostatic switch or Cycling switch. Evaporator freeze-up at low blower or during long runs.	Replace cycling switch or thermostatic switch. Make sure you reinstall capillary tube in the original location.
High 60-100 PSI	Low 70-120 PSI	No cooling. Warm evaporator outlet pipe.	Bad compressor.	Repair or replace compressor. Replace accumulator and orifice. Evacuate and recharge the system.
High 40-60 PSI	High 200-400+ PSI	Fair to poor cooling Evaporator outlet cool to warm. Compressor doesn't cycle.	System overcharged. Air in system.	Recover excess refrigerant until system operation returns to normal or recycle & recharge.
Normal to High. 15-55 PSI	High 200-400 PSI	Fair to poor cooling. Evaporator outlet cool to warm.	Restricted airflow past condenser.	Check cooling fan operation. Clear radiator and condenser restriction. Check condenser fan.

R-134a AUTOMOTIVE

R-134a TEMPERATURE PRESSURE CHART

TEMP F.	PSIG	TEMP F.	PSIG
16	15.69	93	110.20
18	17.04	94	112.10
20	18.43	95	114.10
22	19.87	100	124.30
24	21.35	102	128.50
26	22.88	104	132.90
28	24.47	106	137.30
30	26.10	108	141.90
32	27.79	110	146.50
34	29.52	112	151.30
36	31.32	114	156.10
38	33.17	116	161.10
40	35.07	118	166.10
42	37.03	120	171.30
44	39.05	122	176.60
45	40.09	124	182.00
50	45.48	126	187.50
55	51.27	128	193.10
60	57.47	130	198.90
65	64.10	135	213.70
70	71.19	140	229.40
75	78.75	145	245.80
80	86.80	150	263.00
85	95.40	155	281.10
90	104.40	160	300.10
91	106.30	165	320.00
92	108.20	170	340.80

EVAPORATOR RANGE

CONDENSER RANGE

All values rounded two places

The numbers above represent boiling points for R-134a

EVAPORATOR pressures represent gas temperatures inside the coil and not the coil surfaces. Add to temperature for coil air-off temperatures (8-10f.)

CONDENSER temperatures are not ambient temperatures. Add to ambient (35-40F) for proper heat transfer, the refer to pressure chart.

Example 90 F ambient temp
+40
130 F condenser temp = 200 psig*
*(Based on 30 MPH air flow)

Conditions will vary for different system configurations.
Refer to manufacturers specifications.

BADGER TRUCK REFRIGERATION INC.

Table of Contents

Air Conditioning Sealants:

Air Conditioning Sealants

Air Conditioning Sealants

The use of air conditioning (A/C) sealants has become a controversial topic. Such A/C sealants close small, hard-to-locate leaks in the A/C system. Several vendors currently offer such products.

Sealant technology has existed for decades in the underground gas transfer industry, sealing leaks in pipes, tanks, compressors and other gas-filled containers. This technology has been refined. Vendors now advertise these products to work with R12 and R134a refrigerants, with the exception of hermetically-sealed compressors.

Vendors typically require the technician to replace the drier/accumulator and then pull the system into 30 inches of vacuum for 10 minutes. After this, the technician must ensure that the system is able to hold 25 inches of vacuum for at least five minutes. This assures the installer that the leak (or leaks) is small enough for the sealant to fill.

After entering the system, sealants remain in a liquid state in the A/C system until they encounter moisture at a leak point. As refrigerant leaks out of the system, the extreme temperature differential causes condensation. This condensation (moisture) activates the chemicals in the sealant, forming a solid epoxy-like seal at the site of the leak.

Vendors advertise that the sealants can effectively seal both the metal and rubber parts of an air conditioning system and will not clog or affect any other component when installed according to manufacturer's instructions. Vendors also indicate that sealants may improve cooling performance as they improve thermal efficiency with no noticeable change to pressures. Typical sealants are non-flammable and will not affect the flammability of refrigerant.

Sealants will generally not work on so-called "moving" leaks. These leaks usually follow the failure of compressor-shaft seals or spring-lock couplings due to vibration.

Some sealants include a UV dye. This may allow a technician to find the larger leaks in the event that the leak is too large for the sealant to be effective.

When asked what happens to the sealant when recycled, several vendors indicate that the sealant is removed as part of the refrigerant, then separated and discarded with the reclaimed oil. They also indicate that the sealant will have no affect on the recycler units.

Depending on the type of sealant system used, the cost to the shop ranges from $4.50 (for a 4-ounce single-application can) to as much as $64.95.

The controversy involves a report from RTI Technologies stating they have received evidence indicating that A/C refrigerant system sealants can damage recovery/recycling machines. They report that, under certain circumstances, refrigerant sealant may contaminate a recovery/recycling machine during a service procedure. Once inside the recovery/recycling machine, sealant may cause damage to the machine. This damage may include, but is not limited to, clogging of solenoids, filters and other internal components. This finding caused RTI Technologies to consider their warranty void if evidence of refrigerant system sealant exists in any of the internal components of an RTI recovery/recycling machine.

AIR CONDITIONING SEALANTS

Ford Motor Company and Visteon Automotive (a major supplier of OEM and aftermarket components for A/C systems) have each issued statements indicating that they do not approve the use of refrigerant system sealants. Both have classified such sealants as "contaminants." RTI Technologies has take the same position: If system sealants are found within an automotive A/C system, the system should be treated as "contaminated" in order to protect recovery/recycling equipment from possible damage.

Visteon Automotive has issued a statement saying that it does not endorse or approve the use of any aftermarket A/C refrigeration system sealant. The use of such aftermarket refrigerant sealants shows evidence of damaging A/C refrigerant recovery/evacuation or recharging equipment, as well as possible damage to refrigerant system components.

Badger Truck Refrigeration, Inc.'s intention is to provide sufficient information to technicians and show owners to allow them to make an educated decision whether or not to use these A/C system sealants. We believe that the controversies discussed indicate the need for additional independent testing and review.

Table of Contents:

Crimp Inspection Guide

Electrical Info – Sensors & Actuators

Wiring Diagrams

ATC Troubleshooting Guide

Hose Crimping

Crimp Inspection Guide

Always inspect crimps visually and dimensionally.

Visual Inspection

Visually inspect the first crimp to make sure that the correct dies were used, crimp location is correct, crimp is uniform, and there is no internal deformation of the fitting. A good crimp will be properly centered on the ferrule, meet the target depth dimension, and be symmetrical in shape.

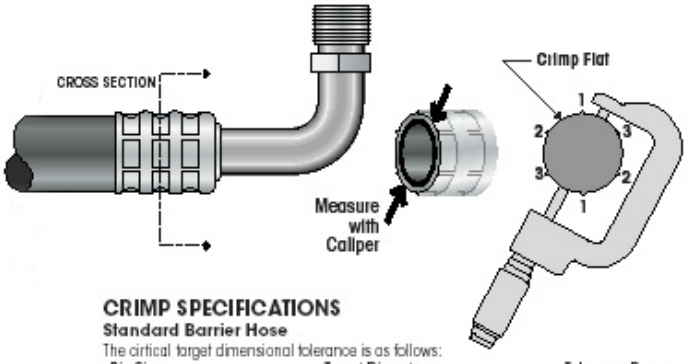

CRIMP SPECIFICATIONS

Standard Barrier Hose

The critical target dimensional tolerance is as follows:

Die Size	Target Diameter	Tolerance Range
#6	.660"	.650" to .675"
#8	.830"	.820" to .845"
#10	.936"	.926" to .951
#12	1.035"	1.025" to 1.050"

Reduced Barrier Hose

The critical target dimensional tolerance is as follows:

Die Size	Target Diameter	Tolerance Range
#6	.556"	.551" to .571"
#8	.640"	.635" to .655"
#10	.742"	.737" to .757
#12	.897"	.892" to .912"

It is normal for one of the three measurements to be close to the nominal target while the other two may be up to .010" larger, but still in tolerance.

What to look for:

1) The first visual criteria for a good crimp is the location of the crimp rings on the ferrule. The instructions provided should produce a crimp that is well centered on the ferrule. The first crimp ring will be approximately ¼" from the open end of the ferrule.

2) The second visual characteristic is symmetry. When the crimper is properly set up, used and maintained, it will produce a crimp which is evenly shaped with respect to the crimp depths and the pinched ears in between. Many conditions in the process could cause an irregular crimp including: worn guide blocks, dies not seated, missing woodruff keys, or deterioration in the plastic die carriers. These faults will produce crimps that are noticeably irregular with varying depth of crimp, or several prominent "ears" between crimp segments.

❑ **FITTING TORQUE VALUES**

TUBE SIZE	THREAD SIZE		TORQUE VALUE (FT/LB)		
	INCH	METRIC	FLARES	O-RING	METRIC
1/4"	7/16"	M12	10-15	5-10	5-10
3/8"	5/8"	M16, M18	20-25	10-15	10-20
3/8"	11/16"	M20	25-30	10-15	15-25
1/2"	3/4"	M20	35-40	15-20	15-25
5/8"	7/8"	M22, M24	50-60	20-30	20-35
3/4"	1 1/16"	M27	70-80	25-35	25-40
SWITCHES	3/8"	M10, M12	5-10	5-10	5-10

The above values are "rule of thumb" and may vary for various applications.

Dimensional Inspection

If the crimp is properly centered and regular, the crimp depth is the only remaining characteristic to check. The target dimensions can be measured with a set of blade or pin micrometers. The dimensional gauging should be used to verify the proper setup or when the tool is disassembled for maintenance. Gauges also should be used periodically during operation to verify continued acceptable crimps.

What to Measure

With the use of a micrometer, measure across the diameter at the center of the crimp. The tooling manufacturer recommends checking in three locations: one reading on each of the three crimp bands, rotating the part to the next facet each time to assure checking each opposing die segment. In this manner each band and facet are checked. NOTE: Using a Vernier Caliper may be an acceptable alternate gauge for the larger size fittings but not the smaller ones. Depending on ferrule size, the crimped "ears" may extend higher than the crimp diameter giving a false reading.

This Crimp Inspection Guide is intended for use with ATCO fittings and Goodyear Galaxy hose, crimped with an ATCO 3700 or 3710 crimper only.

AIR-O-CRIMP™

The *Alternative* To Heavy Duty Crimping

ATCO

AIR-O-CRIMP™

Objective

- Introduction of the Air-O-Crimp™ System
- Air-O-Crimp™ Hose
- Air-O-Crimp™ Fittings
- Examine SAE J-2064 Test Results
- Additional Advantages
- Illustrate Installation Process
- Summary of Key Benefits

AIR-O-CRIMP™

The Air-O-Crimp™ System

The Air-O-Crimp™ system has been developed for applications in which hose end fittings must be attached at the Point of Use in difficult applications such as Buses, Ambulances, RVs, and Limos. There is no need for a conventional crimping tool, messy glue or additional locating devices in order to achieve a reliable connection of the fitting and hose. The Air-O-Crimp™ system has passed SAE J2064 Refrigerant Automotive Air Conditioning Hose Specification testing using the ATCO 3800 AIR-O-CRIMP™ series hose.

AIR-O-CRIMP™

Component System

- **HOSE:** ATCO 3800 Barrier Hose-3800-6, 3800-8, 3800-10, 3800-12
- **FITTINGS:** ATCO "AC" Series Hybrid/Elastomer Fittings
- **CLAMP ASSEMBLIES:** Color/Size Coded-3806, 3808, 3810, 3812
- **AIR CRIMP GUN:** Model 3801 (recommended crimping method)
- **MANUAL CRIMP PLIERS:** Model 3802 (flat) Model 3803 (90°)
- **CUTTER:** Model 3541 KWIKCUT Hose Cutter
- **REFRIGERANT OIL:** PAG or Ester

ATCO

Rev C (06/02/05)

AIR-O-CRIMP™

Assembly Instructions

STEP 1. Cut or trim the hose to the desired length using the ATCO 3541 Kwikcut hose cutter. The cut should be made square to the hose length.

ATCO

AIR-O-CRIMP™

Assembly Instructions

STEP 2. Assemble the clamp assembly onto the hose with the locator tab positioned approximately where the fitting groove will be when the fitting is assembled.

AIR-O-CRIMP™

Assembly Instructions

STEP 3. Apply a small amount of refrigerant oil (PAG or Ester) to the fitting barb and o-rings (optional). Assemble the fitting into the hose until hose touches the ramped step on the fitting. Adjust the clamp assembly so the tab on the locator “snaps” into the groove of the fitting.

ATCO

AIR-O-CRIMP™

Assembly Instructions

STEP 4. Using the air crimp gun or the manual crimp pliers, crimp each clamp separately.

ATCO

AIR-O-CRIMP™

Assembly Instructions

STEP 5. The locator will “pop off” after the second clamp is crimped and can be discarded. The result is a clean appearance and a reliable assembly.

AIR-O-CRIMP™

Summary of Key Benefits

- ✓ The Air-O-Crimp System Design Provides a Reliable, Leak Free Crimp
- ✓ Patent Pending Disposable Clamp Locator
- ✓ Color Coded Clamp Assemblies for Quick Identification
- ✓ Air-O-Crimp Gun Eliminates Variations in the Crimp
- ✓ Manual Crimp Pliers are Also Available
- ✓ Qualified to SAE J2064 Specification
- ✓ Lowest Refrigerant Permeation Rate
- ✓ Low Moisture Ingression Rate
- ✓ Outstanding Coupling Integrity
- ✓ Superior Abrasion Resistance, 3x That of the Competition
- ✓ *High Working Temperatures*-Up to **275°F** (Exceeds J2064 min. 257°F)
- ✓ The Smallest Bend Radius and Hose OD for Ease in Installation
- ✓ Made In The USA

ATCO

Refrigerant Leaks - Leading Cause of A/C Issues

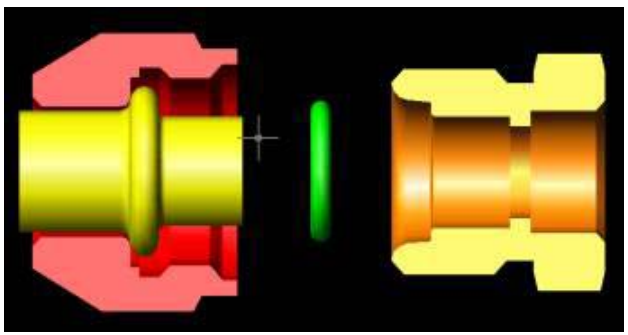

The most critical link in the A/C Circuit is the O-RING

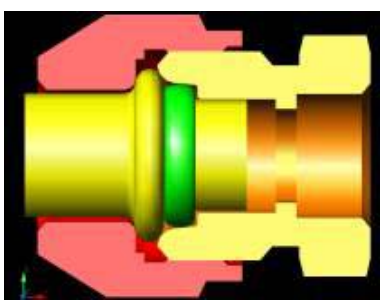

- **The o-ring must be compressed to ensure a good seal.**
- **Small cuts or nicks in an o-ring cause leaky connections.**
- **A small particle of dust can cause a fitting connection to leak.**

O-ring Handling and Storage

CAT® Electronics

Store all o-rings in a clean covered container

- Do not store too many o-rings in a single location – helps prevent aging and contamination
- Debris is introduced each time you open the lid and reach into the box

Lubricate all A/C o-rings with mineral oil (Cat part number 1U-9763) during assembly

- Lubricating reduces the risk of creating cuts or rolling the o-ring during assembly
- Use a dropper bottle to apply the mineral oil
- DO NOT use brushes, q-tips, or soak the o-rings in oil because it introduces debris that causes leaks

O-ring Handling and Storage

CAT® Electronics

Store all o-rings in a clean covered container

- Do not store too many o-rings in a single location – helps prevent aging and contamination
- Debris is introduced each time you open the lid and reach into the box

Lubricate all A/C o-rings with mineral oil (Cat part number 1U-9763) during assembly

- Lubricating reduces the risk of creating cuts or rolling the o-ring during assembly
- Use a dropper bottle to apply the mineral oil
- DO NOT use brushes, q-tips, or soak the o-rings in oil because it introduces debris that causes leaks

Final joint connection - Torque

CAT® Electronics

Refrigerant system connections require special torques and wrenches.

An o-ring connection will leak….

…when <u>under</u>- torqued. Will Loosen and Leak in the Field!

…when <u>over</u>- torqued. The seal is compressed too much, cutting the o-ring, or stripping the threads

- **Apply correct torque per mfg specs.**
- **Calibrate tools at least every 6 months.**
- **Use back–up wrenches to prevent cracking and twisting of the joint.**

The torque wrench is your control mechanism

Ensure that your control mechanism is "in control"

Proper O-ring Installation

Drip clean oil onto clean o-ring.
Smooth onto entire surface.

Place o-ring on fitting.

Always use
CLEAN MINERAL OIL

Oil o-ring again.

Proper O-ring Installation

CAT® Electronics

All connections must be straight

Apply correct torque

Align fittings and ensure seal is seated correctly.

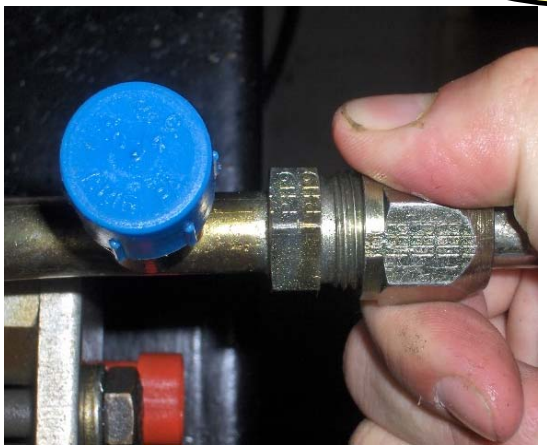

Hand thread fittings together.

DO NOT CROSS THREAD.

Tighten connection with proper torque.

Use a backer wrench to avoid twisting parts.

Electrical Info – Sensors & Actuators

Overview

- Electronic Sensors and Actuators are becoming common place
- They are simple to troubleshoot if you understand the basics

Most Common Failures:

- Bad Electrical Connection
    - Terminal backed out of the connector
    - Broken Wire
    - Corrosion
- Physical Damage
- End of Life (active components)

Wire Guide

Maximum Wire Length for 0.5 Voltage Drop

* Include return wire length (i.e. ground path)

WIRE GAUGE	Maximum Current In Amps													
	1	2	3	4	5	7.5	10	15	20	25	30	35	40	50
18	91	45	30	23	18	12	9	6	5					
16	116	58	39	29	23	16	12	8	6	5				
14	185	93	62	46	37	25	19	12	9	7	6	5		
12	294	147	98	74	59	39	29	20	15	12	10	8	7	6
10	455	227	152	114	91	61	45	30	23	18	15	13	11	9
8	714	357	238	179	143	95	71	48	36	29	24	20	18	14
ATO Fuse Color	Black	Gray	Violet	Pink	Tan	Brown	Red	Blue	Yellow	White	Green	Blu/Grn	Orange	Red

Maximum wire length in feet [multiply by 0.3048 to convert to meters]

RD-5-12560-0 Rev–

Copyright ©2009 Red Dot Corporation

Wire Insulation O.D.

WIRE GAUGE	Metric Wire Size [mm²]	Insulation Diameter in Inches [MM] TXL	GXL	SXL
18	0.80	0.08 [2.0]	0.09 [2.3]	0.11 [2.7]
16	1.00	0.09 [2.3]	0.10 [2.6]	0.12 [3.0]
14	2.00	0.10 [2.5]	0.12 [3.0]	0.14 [3.6]
12	3.00	0.12 [2.9]	0.14 [3.6]	0.16 [4.1]
10	5.00	0.15 [3.8]	0.17 [4.4]	0.19 [5.0]
8	8.00	0.18 [4.6]	0.21 [5.3]	0.23 [5.8]

Copyright ©2008 Red Dot Corporation

Voltage Drop Through Connectors*

TERMINAL	Current in Amps RESULTS BELOW in Millivolts DC								
	5	7.5	10	15	20	25	30	35	40
0.250" Blade	2	4	5	7	10	12	15	17	20
630 Metri-Pack	5	7	10	15	20	25	30	35	
280 Metri-Pack	6	9	12	18	23	29	35		
Weather-Pack	9	14	18	27	36				
150 Metri-Pack	13	20	26	39					
100 Micro-Pack	19	29	38						
Deutsch Size 12	2	3	4	7	9	11			
Deutsch Size 16	4	6	8	13					
Deutsch Size 20	9	13							
Thermostat	61	70							
ISO Relay	46	54	62	79	95	111	128	144	161
Butt Splice	1	2	2	3	4	5	6	7	8
Ring Terminal	2	3	3	5	7	9	10	12	14

* Millivolt drop through connector terminals/components @ 20°C

Estimate only - values may vary due to condition and age of terminal/component and other ambient conditions. Consult manufacturer for specific information and usage limitations.

Sensors

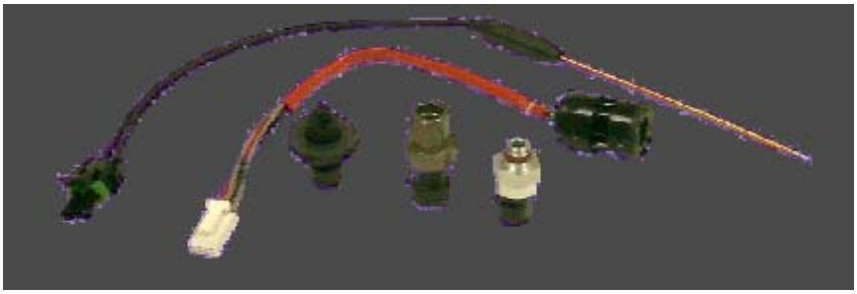

- **Temperature Sensors**
  - Air Temperature
    - Cab
    - Ambient
    - Unit Air Discharge
  - Freeze Probe
  - Coolant Temperature
  - Refrigerant

Temperature Sensors

Temperature Sensor Resistance Chart

Temperature		Nominal Resistance		
°C	°F	3K Ohms	5K Ohms	10K Ohms
66	150	600	1,000	2,000
63	145	700	1,100	2,200
60	140	700	1,200	2,400
57	135	800	1,400	2,700
54	130	900	1,500	3,000
52	125	1,000	1,700	3,300
49	120	1,100	1,900	3,700
46	115	1,300	2,100	4,100
43	110	1,400	2,300	4,600
41	105	1,600	2,600	5,200
38	100	1,800	2,900	5,800
35	95	2,000	3,300	6,500
32	90	2,200	3,700	7,400
29	85	2,500	4,100	8,300
27	80	2,800	4,700	9,400
25	77	3,000	5,000	10,000
24	75	3,100	5,200	10,500
21	70	3,600	5,900	11,900
18	65	4,000	6,700	13,600
16	60	4,600	7,600	15,500
13	55	5,200	8,700	17,700
10	50	5,900	9,900	20,200
7	45	6,800	11,300	23,300
4	40	7,800	13,000	26,700
2	35	9,000	14,900	30,900
-1	30	10,300	17,200	35,700
-4	25	11,900	19,900	41,400
-7	20	13,800	23,000	48,200
-9	15	16,000	26,700	55,900
-12	10	18,700	31,100	65,700
-15	5	21,800	36,300	76,100
-18	0	25,500	42,500	90,300

- Most Temperature Sensors are Resistive Devices (Thermistors)
- They are Negative Temperature Coefficient (NTC)
- Troubleshooting Easily Done with Multimeter

REFERENCE

Sensors

- Pressure Transducers
  - Three Wire Devices (+12Vdc, GND, Signal)
  - High Side Pressure 0-500
    - 3.25 V out @ 100psig
  - Low Side Pressure 0-150
    - 1.15 V out @ 100psig
- Solar Sensors
  - Photo Diodes

Actuators

- Devices that respond to a Control Signal to perform a function
- Two Categories
  - Smart (Built-In Control Logic)
  - Dumb (On/Off, Positionable with Feedback)

ISO Control Relays

- Standard
- With Diode (Polarity Sensitive)
- With Resistor

Actuator Tech Guide

Red Dot Part Number	Mfg P/N	Supplier	Type	Sealing	Description	Test Circuit	Pin Outs
RD-5-6320-0 or 71R3575	41000 or 66004	CEI	"Red D"	Unsealed	Servo Control - 104 Degree Travel	B	7 - Ground 8 - Control Sig. 10 - +12V
RD-5-8988-0 or 71R3571	50004 or 66002	CEI	"Red N"	Unsealed	Servo Control - 126 Degree Travel	B	7 - Ground 8 - Control Sig. 10 - +12V
RD-5-8791-0 or 71R3573	50000 or 66011	CEI	"Green T"	Unsealed	Two Position (Open - Close)	D	5 - +12V 6 - Open = CW, Ground = CCW 7 - Ground
RD-5-9021-0 or 71R3578	41009 or 66027	CEI	"White H"	Unsealed	Potentiometer Feedback Only	C	5 - Motor + 6 - Motor - 8 - Ground 9 - Feedback Sig. 10 - Voltage Ref.
RD-5-9063-0 or 71R3576	51067	CEI	—	Sealed	Sealed - Servo Control	A	A - +12V C - Ground D - Control Sig.
N/A	51058	CEI	—	Sealed	Sealed - Servo Control	A	A - +12V C - Ground D - Control Sig.
N/A	51811	CEI	—	Sealed	Sealed - Motor Only, No Feedback	C	A - Motor + F - Motor -
RD-5-11518-0	50601	CEI	—	Sealed	Sealed - Potentiometer Feedback Only	C	A - Motor + C - +12V D - Ground E - Feedback Sig. F - Motor -
RD-5-11470-0	RD-5-11470-0	Red Dot	—	Sealed	Sealed - 12/24v Servo Control	A	1 - +12/24V 2 - Control Sig. 4 - Ground
RD-5-10623-0	F7UH-19E616-AA	Ford / Visteon	"Ford"	Unsealed	Servo Control	B*	1 - To Pot Ground 2 - Control Sig. 5 - Ground 6 - +12V 7 - To Pot Vcc

* Connect 10K pot directly to pins (7) Vee, (1) GND and (2) Signal

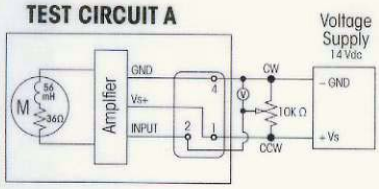

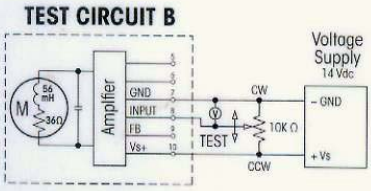

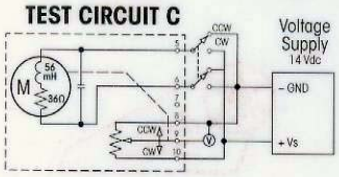

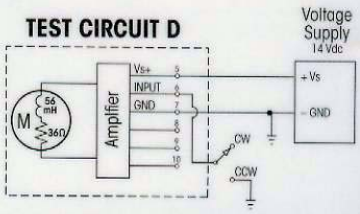

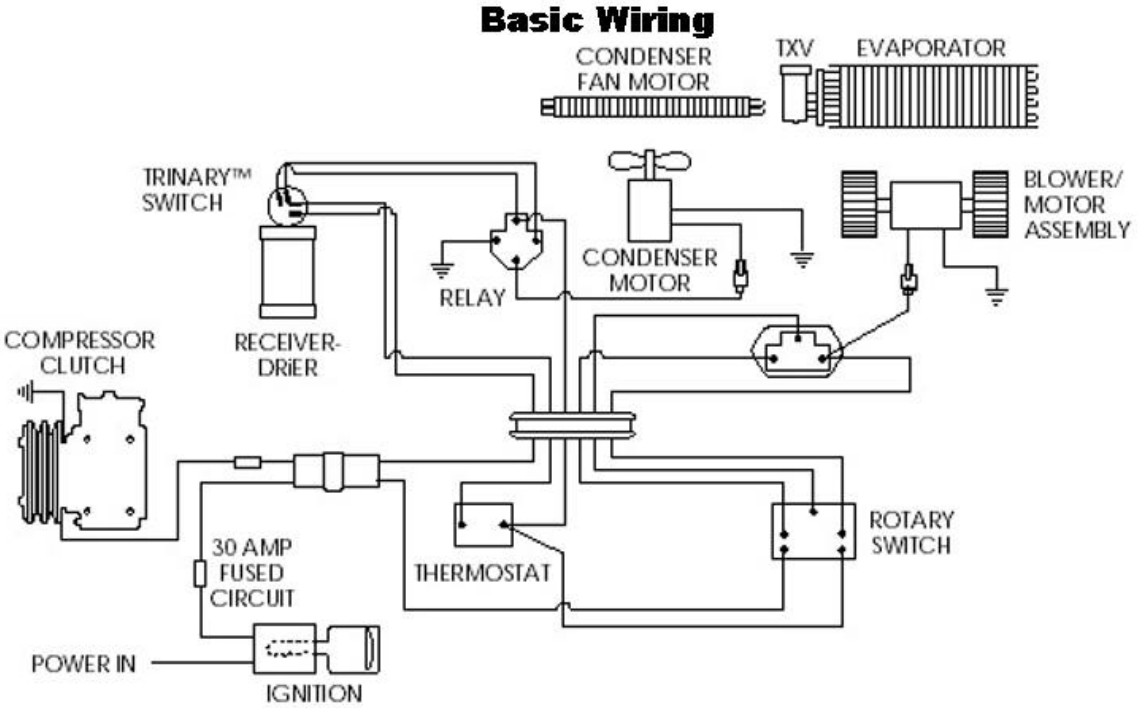
Basic Wiring
CONDENSER FAN MOTOR
TXV
EVAPORATOR
TRINARY™ SWITCH
BLOWER/ MOTOR ASSEMBLY
CONDENSER MOTOR
RELAY
COMPRESSOR CLUTCH
RECEIVER-DRiER
ROTARY SWITCH
30 AMP FUSED CIRCUIT
THERMOSTAT
POWER IN
IGNITION

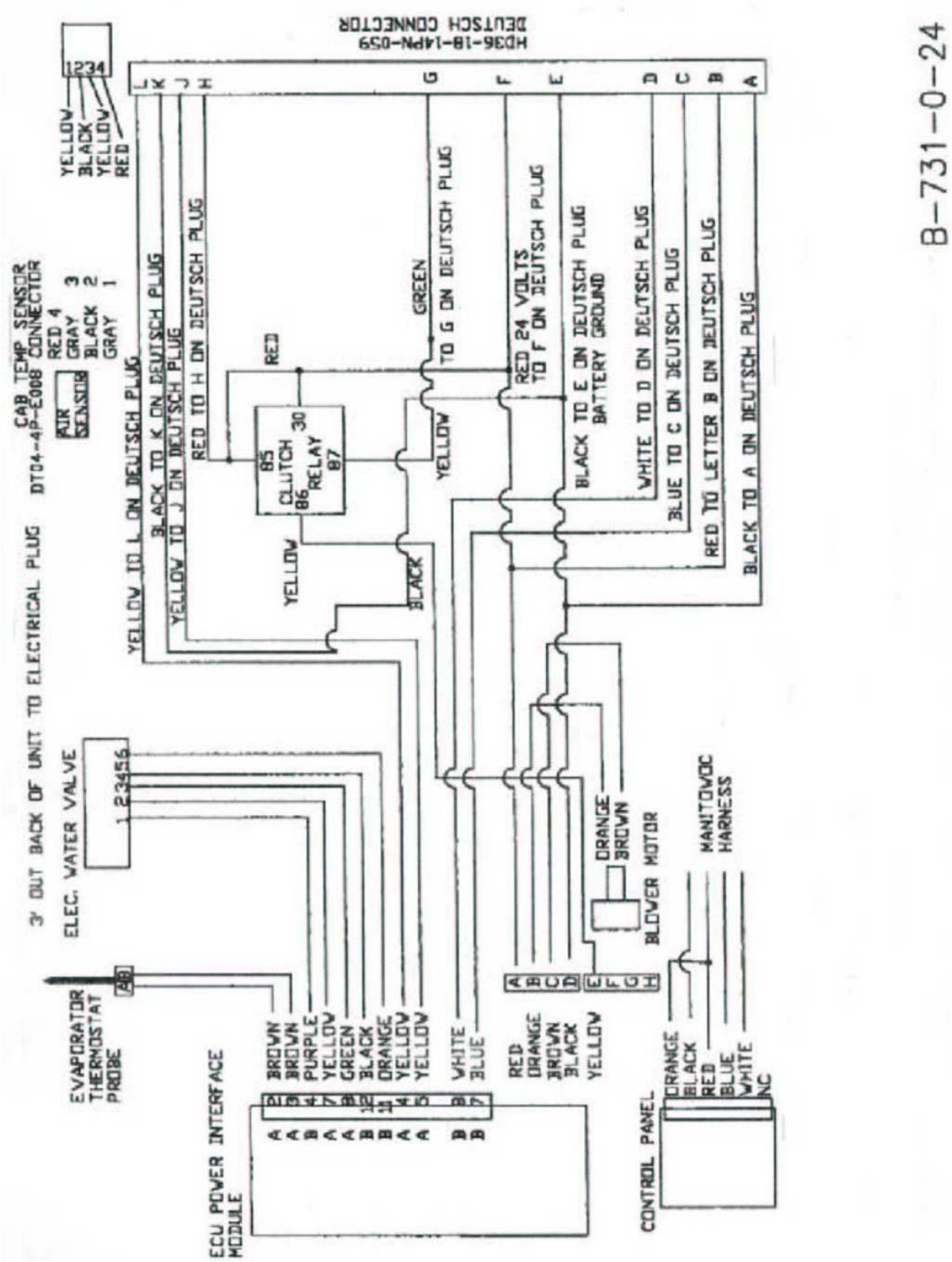
B-731-0-24
DEUTSCH CONNECTOR
HD36-18-14PN-059
CAB TEMP SENSOR
DT04-4P-E008 CONNECTOR
RED 4
GRAY 3
BLACK 2
GRAY 1
AIR SENSOR
YELLOW
BLACK
YELLOW
RED
3' OUT BACK OF UNIT TO ELECTRICAL PLUG
YELLOW TO L ON DEUTSCH PLUG
BLACK TO K ON DEUTSCH PLUG
YELLOW TO J ON DEUTSCH PLUG
RED TO H ON DEUTSCH PLUG
GREEN
TO G ON DEUTSCH PLUG
RED 24 VOLTS
TO F ON DEUTSCH PLUG
BLACK TO E ON DEUTSCH PLUG
BATTERY GROUND
WHITE TO D ON DEUTSCH PLUG
BLUE TO C ON DEUTSCH PLUG
RED TO LETTER B ON DEUTSCH PLUG
BLACK TO A ON DEUTSCH PLUG
CLUTCH RELAY
85
86
30
87
YELLOW
BLACK
ELEC. WATER VALVE
ORANGE
BROWN
BLOWER MOTOR
MANITOWOC HARNESS
EVAPORATOR THERMOSTAT PROBE
BROWN
BROWN
PURPLE
YELLOW
GREEN
BLACK
ORANGE
YELLOW
YELLOW
WHITE
BLUE
RED
ORANGE
BROWN
BLACK
YELLOW
ECU POWER INTERFACE MODULE
CONTROL PANEL
ORANGE
BLACK
RED
BLUE
WHITE
NC

Freightliner Columbia Wiring

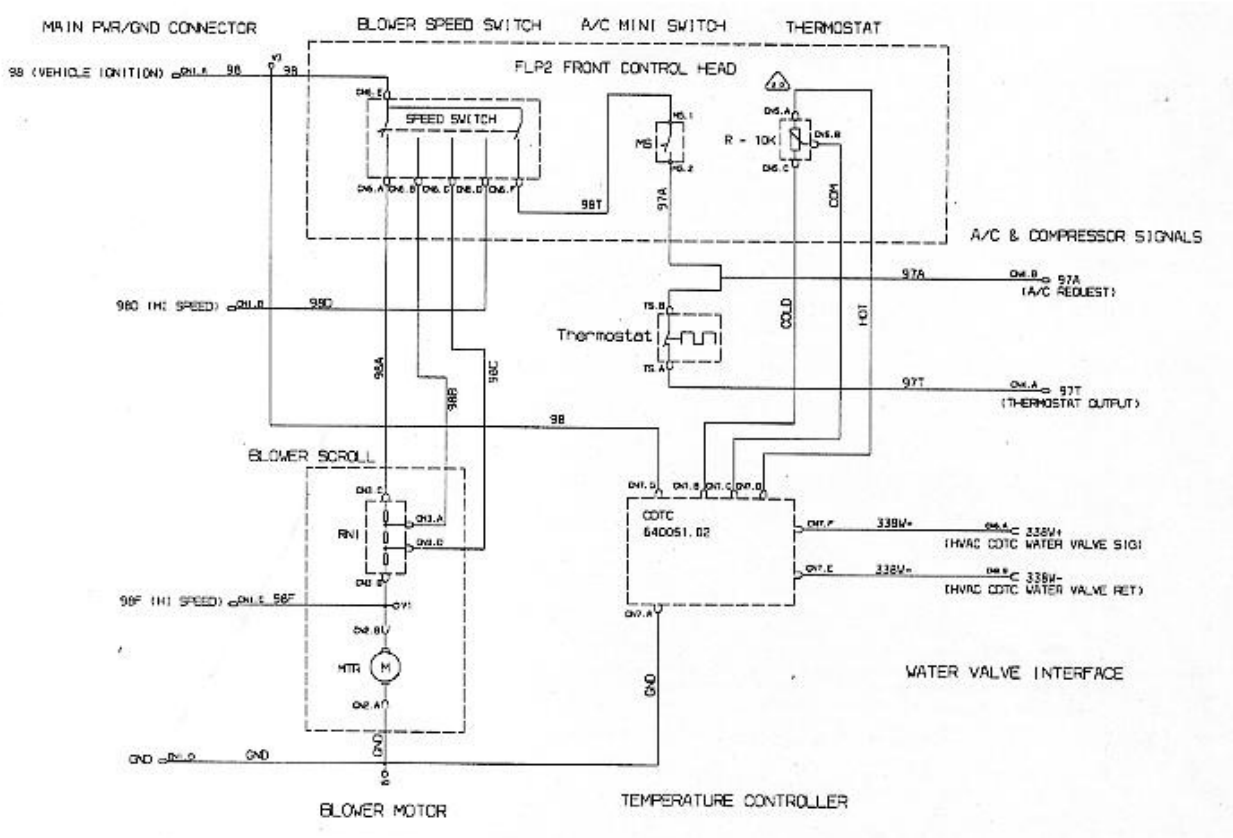

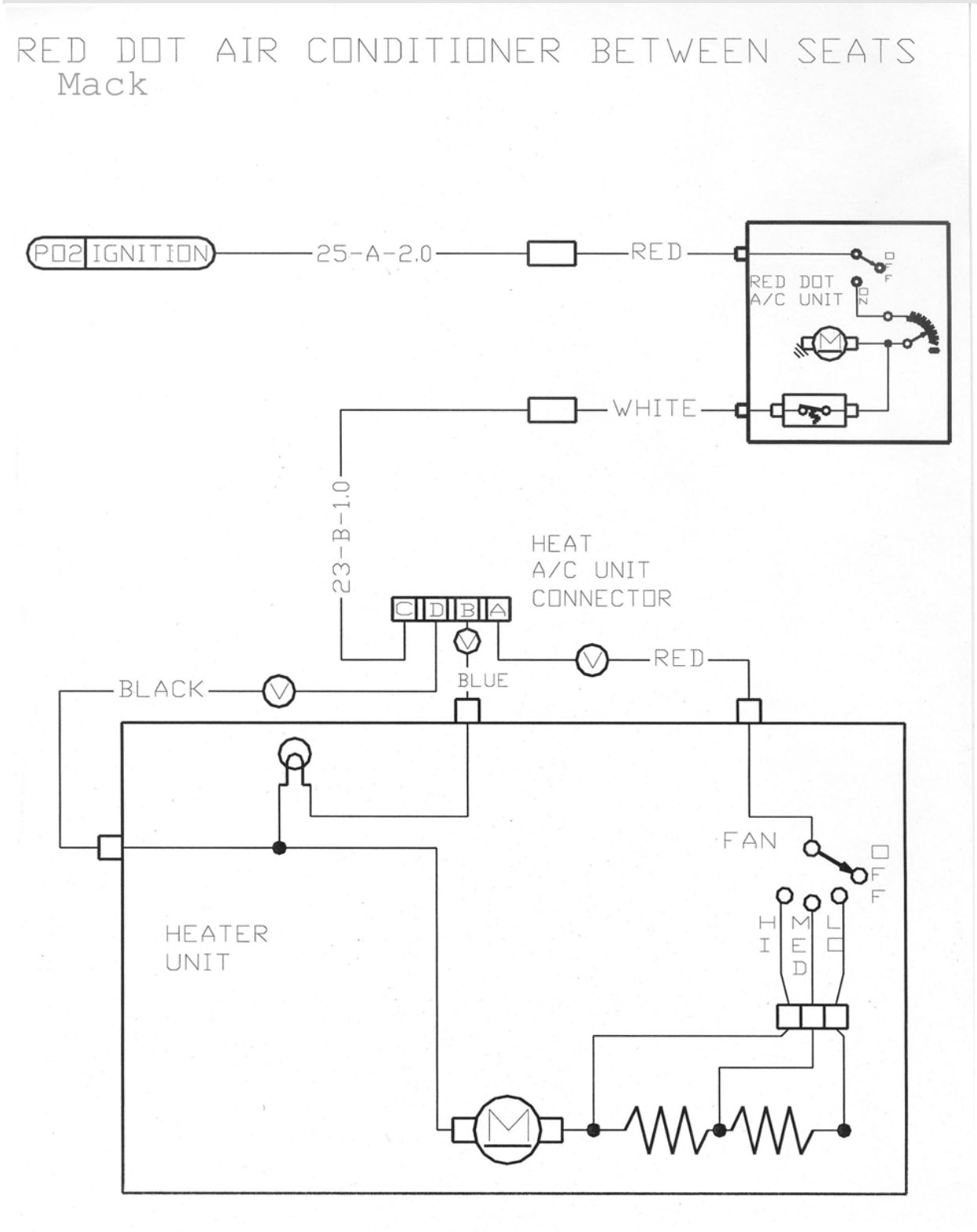
RED DOT AIR CONDITIONER BETWEEN SEATS
Mack
P02 IGNITION
25-A-2.0
RED
RED DOT
A/C UNIT
OFF
ON
WHITE
23-B-1.0
HEAT
A/C UNIT
CONNECTOR
C D B A
BLUE
RED
BLACK
FAN
OFF
HI
MED
LO
HEATER
UNIT

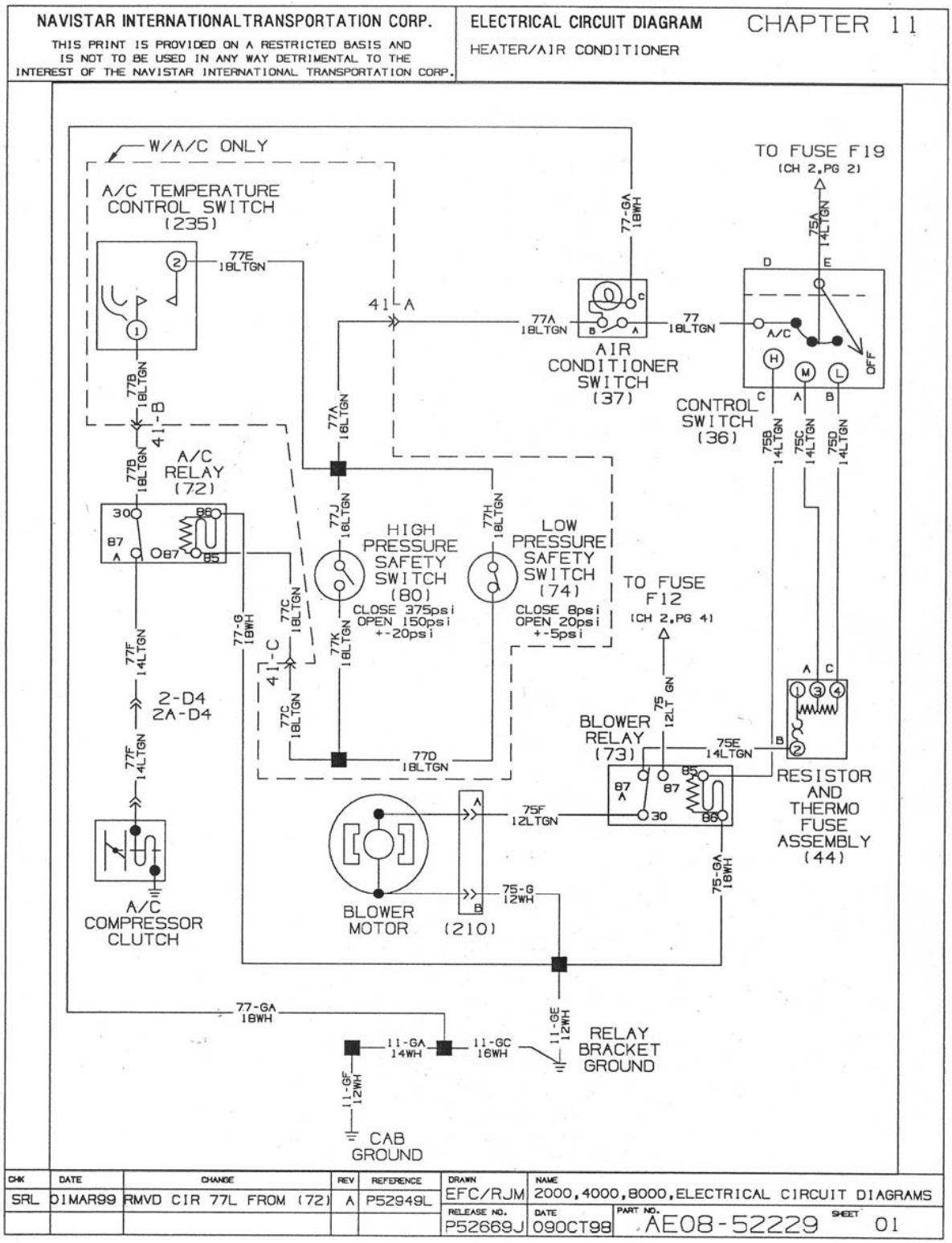
NAVISTAR INTERNATIONALTRANSPORTATION CORP.
THIS PRINT IS PROVIDED ON A RESTRICTED BASIS AND IS NOT TO BE USED IN ANY WAY DETRIMENTAL TO THE INTEREST OF THE NAVISTAR INTERNATIONAL TRANSPORTATION CORP.
ELECTRICAL CIRCUIT DIAGRAM
CHAPTER 11
HEATER/AIR CONDITIONER
W/A/C ONLY
A/C TEMPERATURE CONTROL SWITCH (235)
TO FUSE F19 (CH 2,PG 2)
AIR CONDITIONER SWITCH (37)
CONTROL SWITCH (36)
A/C RELAY (72)
HIGH PRESSURE SAFETY SWITCH (80)
CLOSE 375psi OPEN 150psi +-20psi
LOW PRESSURE SAFETY SWITCH (74)
CLOSE 8psi OPEN 20psi +-5psi
TO FUSE F12 (CH 2,PG 4)
BLOWER RELAY (73)
RESISTOR AND THERMO FUSE ASSEMBLY (44)
A/C COMPRESSOR CLUTCH
BLOWER MOTOR
(210)
RELAY BRACKET GROUND
CAB GROUND
CHK SRL
DATE 01MAR99
CHANGE RMVD CIR 77L FROM (72)
REV A
REFERENCE P52949L
DRAWN EFC/RJM
NAME 2000,4000,8000,ELECTRICAL CIRCUIT DIAGRAMS
RELEASE NO. P52669J
DATE 09OCT98
PART NO. AE08-52229
SHEET 01

Peterbilt Wiring

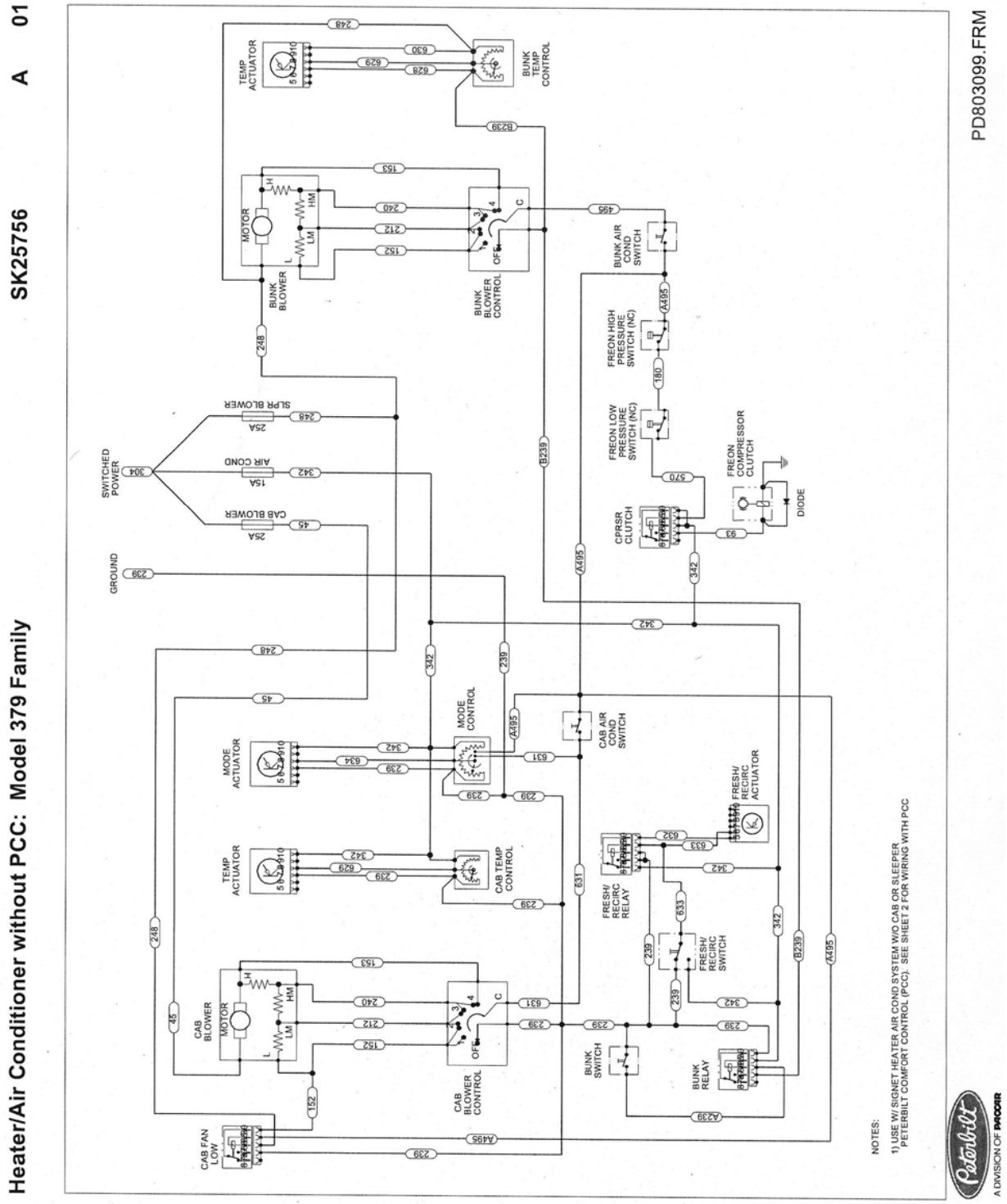

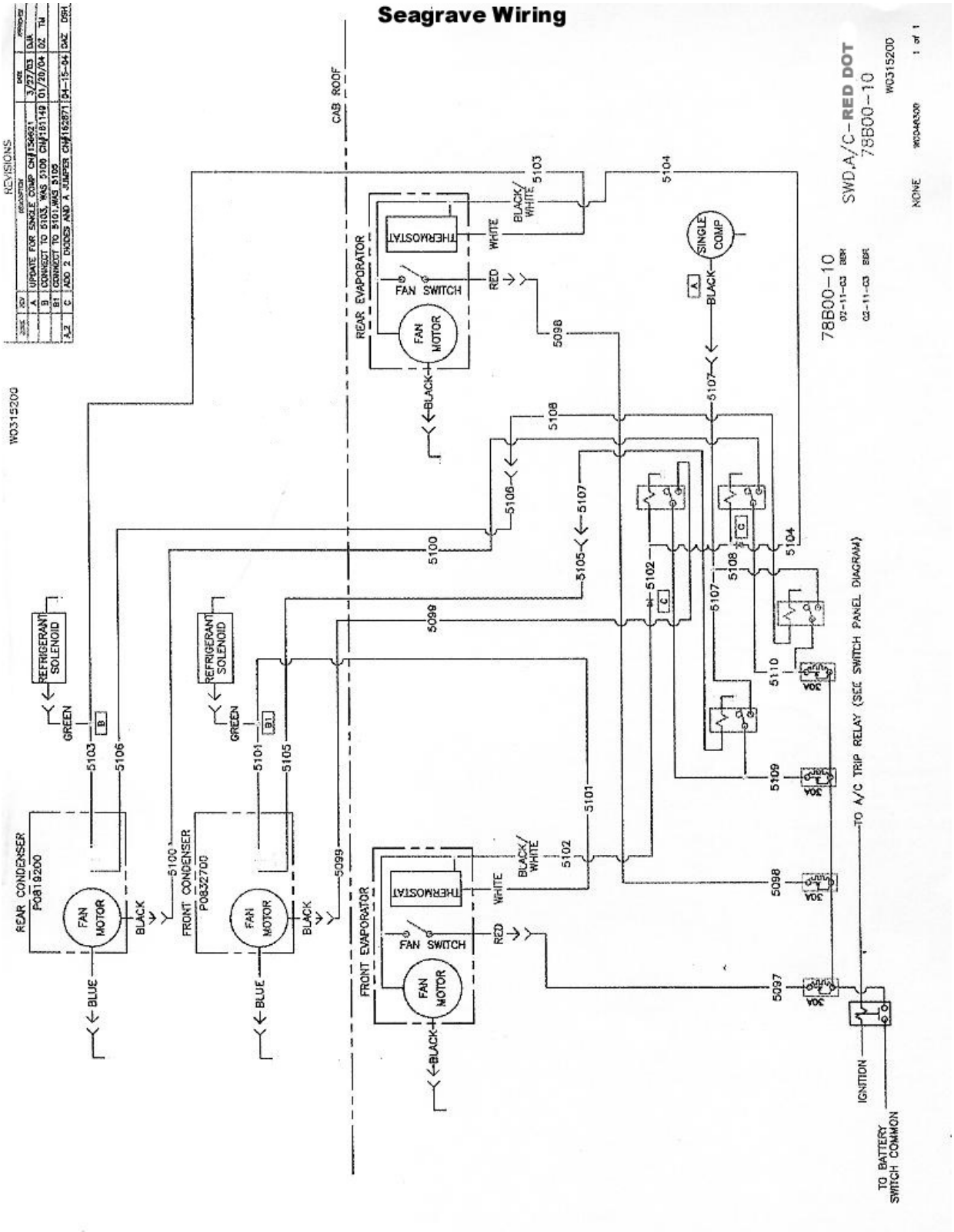
Seagrave Wiring
REVISIONS
CAB ROOF
REAR EVAPORATOR
FRONT EVAPORATOR
THERMOSTAT
FAN SWITCH
FAN MOTOR
SINGLE COMP
REFRIGERANT SOLENOID
REAR CONDENSER
FRONT CONDENSER
BLACK/WHITE
WHITE
RED
BLACK
GREEN
BLUE
TO A/C TRIP RELAY (SEE SWITCH PANEL DIAGRAM)
IGNITION
TO BATTERY SWITCH COMMON
SWD A/C – RED DOT
78B00-10
W031520D

Accessing the Diagnostic Mode on ATC Systems

Red Dot
With the system On, press the "OUTSIDE AIR TEMPERATURE" button three times to enter the error code mode

Caterpillar/AGCO Challenger
With the system On, press the "OUTSIDE AIR TEMPERATURE" button three times to enter the error code mode

Pre ss and hold the "OUTSIDE AIR TEMPERATURE" button for an additional five seconds to enter the advanced diagnostics real time display

CNH Windrower
Press the "ON" button three times to enter the error code mode

Press and hold the "ON" button for an additional five seconds to enter the advanced diagnostics real time display

Freightliner P2 Century Class
Available only on the SAE 1708 Data Link

Western Star
With system off, press and hold "UP" temperature switch for five seconds to enter error code mode

Press and hold the "UP" temperature switch for an additional five seconds to enter the advanced diagnostics real time display

Temperature Sensor Resistance Chart

Temperature		Nominal Resistance		
°C	°F	3K Ohms	5K Ohms	10K Ohms
66	150	600	1,000	2,000
63	145	700	1,100	2,200
60	140	700	1,200	2,400
57	135	800	1,400	2,700
54	130	900	1,500	3,000
52	125	1,000	1,700	3,300
49	120	1,100	1,900	3,700
46	115	1,300	2,100	4,100
43	110	1,400	2,300	4,600
41	105	1,600	2,600	5,200
38	100	1,800	2,900	5,800
35	95	2,000	3,300	6,500
32	90	2,200	3,700	7,400
29	85	2,500	4,100	8,300
27	80	2,800	4,700	9,400
25	77	3,000	5,000	10,000
24	75	3,100	5,200	10,500
21	70	3,600	5,900	11,900
18	65	4,000	6,700	13,600
16	60	4,600	7,600	15,500
13	55	5,200	8,700	17,700
10	50	5,900	9,900	20,200
7	45	6,800	11,300	23,300
4	40	7,800	13,000	26,700
2	35	9,000	14,900	30,900
-1	30	10,300	17,200	35,700
-4	25	11,900	19,900	41,400
-7	20	13,800	23,000	48,200
-9	15	16,000	26,700	55,900
-12	10	18,700	31,100	65,700
-15	5	21,800	36,300	76,100
-18	0	25,500	42,500	90,300

Cause	Code
No Faults	E00
Cab Sensor Shorted	E01
Cab Sensor Open	E02
Evaporator Probe Shorted	E03
Evaporator Probe Open	E04
Outlet Sensor Shorted	E05
Outlet Sensor Open	E06
ambient Sensor Shorted	E07
Ambient Sensor Open	E08
Water Valve Shorted	E09
Water Valve Open	E10

RedDOT CORPORATION

BADGER TRUCK REFRIGERATION INC.

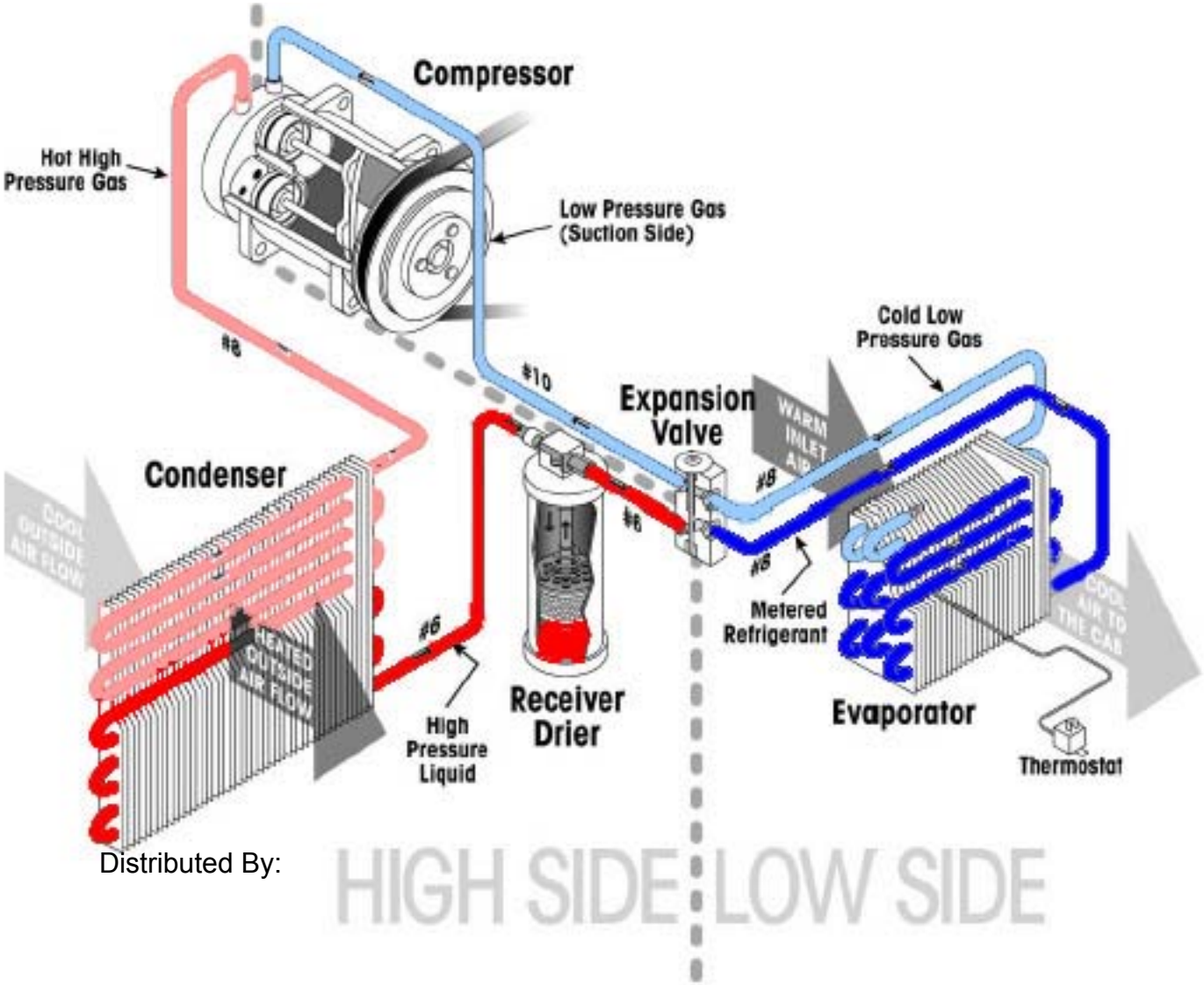

Distributed By:

www.btrac.com

6302 Texaco Drive
Eau Claire, WI 54703

©2007 Badger Truck Refrigeration, Inc.
Printed in USA