UNITED STATES PATENT AND TRADEMARK OFFICE

BEFORE THE PATENT TRIAL AND APPEAL BOARD

REOLINK DIGITAL TECHNOLOGY CO., LTD.
Petitioner,

v.

KT IMAGING US, LLC
Patent Owner

Case No. IPR2024-01155
U.S. Patent No. 8,004,602

PETITION FOR *INTER PARTES* REVIEW OF U.S. PATENT NO. 8,004,602

TABLE OF CONTENTS

Page

TABLE OF EXHIBITS vi

I. INTRODUCTION 1

II. MANDATORY NOTICES 1

A. Real Parties-in-Interest 1

B. Related Matters 1

C. Counsel and Service Information 3

III. PAYMENT OF FEES 3

IV. GROUNDS FOR STANDING 3

V. PRECISE RELIEF REQUESTED 5

VI. THE ’602 PATENT 6

A. Problems Purportedly Addressed 6

B. Level of Ordinary Skill in the Art 9

C. Claim Construction 9

VII. DETAILED GROUNDS OF UNPATENTABILITY 10

A. Ground I – Claims 1–15 are obvious over Imaoka and Seo 10

1. Claim 1 10

2. Claim 2 – The image sensor structure as claimed in claim 1, wherein the chip is a complementary metal oxide semiconductor (CMOS) image sensor chip 31

3. Claim 3 – The image sensor structure as claimed in claim 1, wherein the chip further comprises a plurality of second conducting pads or balls which are arranged on the second surface of the chip and electrically connected to the conducting channel 31

4. Claim 4 – The image sensor structure as claimed in claim 1, wherein the chip further comprises a ball grid array which is arranged on the second surface of the chip and electrically connected to the conducting channel 32

5. Claim 5 – The image sensor structure as claimed in claim 1, wherein a cavity is formed at the bottom of the holder 33

6. Claim 6 – The image sensor structure as claimed in claim 1, wherein the holder is made of a plastic material or a metal material.....34

7. Claim 7 – The image sensor structure as claimed in claim 1, wherein the contact surface is combined with the first surface by an adhesive. 35

8. Claim 8 – The image sensor structure as claimed in claim 1, wherein the contact surface is combined with the first surface by an UV curable adhesive.....36

9. Claim 9 – The image sensor structure as claimed in claim 1, wherein the lens is a plastic lens. 36

10. Claim 10 – The image sensor structure as claimed in claim 9, which further comprises an IR cut filter glass which is embedded in the through hole and arranged below the plastic lens. 38

11. Claim 11 – The image sensor structure as claimed in claim 1, wherein the lens is a glass lens. 40

12. Claim 12 – The image sensor structure as claimed in claim 11, wherein the glass lens is coated with an IR cut filtering layer.....41

13. Claim 13 – The image sensor structure as claimed in claim 1, wherein the lens comprises a glass lens and a plastic lens, wherein the glass lens is arranged below the plastic lens 42

14. Claim 14 – The image sensor structure as claimed in claim 13, wherein the glass lens is coated with an IR cut filtering layer 43

15. Claim 15 – The image sensor structure as claimed in claim 13, which further comprises an IR cut filter glass which is embedded in the through hole and arranged below the plastic lens 43

B. Ground II – Claims 1–7, 9–11, 13, and 15 are obvious over Ma and Wood 44

1. Claim 1 44

2. Claim 2 – The image sensor structure as claimed in claim 1, wherein the chip is a complementary metal oxide semiconductor (CMOS) image sensor chip 56

3. Claim 3 – The image sensor structure as claimed in claim 1, wherein the chip further comprises a plurality of second conducting pads or balls which are arranged on the second surface of the chip and electrically connected to the conducting channel 57

4. Claim 4 – The image sensor structure as claimed in claim 1, wherein the chip further comprises a ball grid array which is arranged on the second surface of the chip and electrically connected to the conducting channel 59

5. Claim 5 – The image sensor structure as claimed in claim 1, wherein a cavity is formed at the bottom of the holder 59

6. Claim 6 – The image sensor structure as claimed in claim 1, wherein the holder is made of a plastic material or a metal material 60

7. Claim 7 – The image sensor structure as claimed in claim 1, wherein the contact surface is combined with the first surface by an adhesive. 61

8. Claim 9 – The image sensor structure as claimed in claim 1, wherein the lens is a plastic lens. 62

9. Claim 10 – The image sensor structure as claimed in claim 9, which further comprises an IR cut filter glass which is embedded in the through hole and arranged below the plastic lens. 62

10. Claim 11 – The image sensor structure as claimed in claim 1, wherein the lens is a glass lens. 64

11. Claim 13 – The image sensor structure as claimed in claim 1, wherein the lens comprises a glass lens and a plastic lens, wherein the glass lens is arranged below the plastic lens 65

12. Claim 15 – The image sensor structure as claimed in claim 13, which further comprises an IR cut filter glass which is embedded in the through hole and arranged below the plastic lens 66

VIII. SECONDARY CONSIDERATIONS 67

IX. DISCRETIONARY DENIAL IS NOT APPROPRIATE 67

X. CONCLUSION.....71

TABLE OF EXHIBITS

EXHIBIT	DESCRIPTION
Ex. 1001	U.S. Patent No. 8,004,602
Ex. 1002	Declaration of R. Jacob Baker, Ph.D., P.E.
Ex. 1003	Curriculum Vitae of R. Jacob Baker, Ph.D., P.E.
Ex. 1004	File History of U.S. Patent No. 8,004,602
Ex. 1005	U.S. Patent Application Publication No. 2004/0245649 ("Imaoka")
Ex. 1006	U.S. Patent Application Publication No. 2006/0028573 ("Seo")
Ex. 1007	U.S. Patent Application Publication No. 2005/0077458 ("Ma")
Ex. 1008	U.S. Patent Application Publication No. 2006/0035415 ("Wood")
Ex. 1009	U.S. Patent Application Publication No. 2008/0284041 ("Jang")
Ex. 1010	U.S. Patent Application Publication No. 2007/0181792 ("Yoshimoto")
Ex. 1011	U.S. Patent Application Publication No. 2007/0145420 ("Okada")
Ex. 1030	Reolink Digital's Unopposed Motion To Set Aside Clerk's Entry Of Default (D.I. 15), *KT Imaging USA, LLC v. Reolink Digital Technology Co., Ltd.*, 6-22-cv-00876 (WDTX) (June 14, 2023)
Ex. 1031	Order Granting Unopposed Motion To Set Aside Clerk's Entry Of Default (D.I. 16), *KT Imaging USA, LLC v. Reolink Digital Technology Co., Ltd.*, 6-22-cv-00876 (WDTX) (June 17, 2023)
Ex. 1032	Claim Construction Order and Memorandum in Support Thereof, (D.I. 52), *KT Imaging USA, LLC v. Reolink Digital Technology Co., Ltd.*, 6-22-cv-00876 (WDTX) (April 29, 2024)
Ex. 1033	Joint Stipulation to Amend Scheduling Order (D.I. 54), KT Imaging USA, LLC v. Reolink Digital Technology Co., Ltd., 6-22-cv-00876 (WDTX) (May 13, 2024)

I. INTRODUCTION

Reolink Digital Technology Co., Ltd. ("Petitioner" or "Reolink Digital") requests *inter partes* review of claims 1–15 of U.S. Patent No. 8,004,602 ("the '602 patent") (Ex. 1001) assigned to KT Imaging US, LLC ("Patent Owner" or "PO" or "KTI"). For the reasons provided below, the Board should find the challenged claims unpatentable.

II. MANDATORY NOTICES

A. Real Parties-in-Interest

The real party-in-interest is Reolink Digital Technology, Co., Ltd.

B. Related Matters

The '602 patent is at issue in *KT Imaging USA, LLC v. Reolink Digital Technology Co., Ltd.*, 6-22-cv-00876 (WDTX), filed August 22, 2022 ("the WDTX case"). The '602 patent was also asserted in the following matters:

Case	Filing Date
KT Imaging USA, LLC v. Panasonic Corporation, 4-19-cv-00485 (EDTX)	7/3/2019
KT Imaging USA, LLC v. Lightcomm Technology Co., Ltd., 4-19-cv-00486 (EDTX)	7/3/2019
KT Imaging USA, LLC v. Kyocera Corporation, 4-19-cv-00488 (EDTX)	7/3/2019

KT Imaging USA, LLC v. Acer America Corporation, 6-20-cv-00299 (WDTX)	4/20/2020
KT Imaging USA, LLC v. Dynabook, Inc., 4-20-cv-00333 (EDTX)	4/20/2020
KT Imaging USA, LLC v. ASUSTek Computer Inc., 6-20-cv-00300 (WDTX)	4/20/2020
KT Imaging USA, LLC v. HP Inc., 4-20-cv-00337 (EDTX)	4/20/2020
KT Imaging USA, LLC v. Samsung Electronics Co., Ltd., 4-20-cv-00339 (EDTX)	4/20/2020
KT Imaging USA, LLC v. Microsoft Corporation, 6-21-cv-01000 (WDTX)	9/28/2021
KT Imaging USA, LLC v. Apple Inc., 6-21-cv-01002 (WDTX)	9/28/2021
KT Imaging USA, LLC v. Google, LLC, 6-21-cv-01003 (WDTX)	9/28/2021
KT Imaging USA, LLC v. Dell Technologies Inc., 6-21-cv-01004 (WDTX)	9/28/2021
KT Imaging USA, LLC v. Anker Innovations Ltd., 6-22-cv-00872 (WDTX)	8/22/2022
KT Imaging USA, LLC v. Hanwha Techwin Co., Ltd., 6-22-cv-00874 (WDTX)	8/22/2022
KT Imaging USA, LLC v. Shenzhen Wansview Technology Co., Ltd., 6-22-cv-00877 (WDTX)	8/22/2022

KT Imaging USA, LLC v. Axis Communications AB, 1-22-cv-08240 (SDNY)	9/27/2022
KT Imaging USA, LLC v. Hangzhou Hikvision Digital Technology Co., Ltd., 6-22-cv-01026 (WDTX)	10/3/2022
KT Imaging USA, LLC v. Zhejiang Dahua Technology Co., Ltd., 4-22-cv-03440 (SDTX)	10/6/2022

C. Counsel and Service Information

Lead counsel: Timothy C. Bickham (Reg. No. 41,618); Backup Counsel: (1) Stephen Yang (Reg. No. 70,589); (2) Chris (Zheng) Liu (Reg. No. 67,862); (3) Mark Consilvio (Reg. No. 72,065). Service information: Dentons US, LLP, 1900 K Street NW, Washington, DC 20006; Tel: 202.496.7500; Fax: 202.496.7756; email: ipt.docketchi@dentons.com. Petitioner consents to electronic service.

III. PAYMENT OF FEES

The PTO is authorized to charge any fees due during this proceeding to Deposit Account No. 30827.

IV. GROUNDS FOR STANDING

Petitioner certifies the ’602 patent is available for review and Petitioner is not barred or estopped from requesting review on the grounds identified herein. Petitioner files this request less than a year after it waived service the WDTX case. *See Motorola Mobility LLC v. Patent of Michael Arnouse*, Case IPR2013-00010, Paper 20 (January 30, 2013) (informative decision) (“[W]here the petitioner waives

service of a summons, the one-year time period begins on the date on which such a waiver is filed."). "As the Board has recognized, a complaint *improperly served* does not trigger the § 315(b) time bar." *GoPro, Inc. v. 360Heros, Inc.*, IPR2018-01754, Paper 38 at 14 (PTAB Aug. 23, 2019) (precedential decision) (quoting *IpDatatel, LLC v. ICN Acquisition, LLC*, Case IPR2018-01823, Paper 17 at 10–18 (PTAB Apr. 17, 2019) (interpreting "served" in § 315(b) to require compliance with Rule 4 of the Federal Rules of Civil Procedure ("FRCP")). Indeed, as the Federal Circuit stated in *Click-To-Call*, "the text of § 315(b) clearly and unmistakably considers only the date on which the petitioner, its privy, or a real party in interest was properly served with a complaint." 899 F.3d 1321, 1332 (Fed. Cir. 2018).

Plaintiff KTI filed a complaint on August 22, 2022 in U.S. District Court for the Western District of Texas alleging patent infringement by Petitioner Reolink Digital. KTI then ineffectively attempted to serve Petitioner by mailing a copy of the summons and the complaint to a Hong Kong address that is not registered to Petitioner or any agent of Petitioner. (*See* Ex 1030, 2.) KTI attempted to serve Petitioner at an address where it does not maintain a place of business and has no association to the business located at the Hong Kong address. (*Id*., 2, 4.) The service attempt also did not comply with Rule 4 of the Federal Rules of Civil Procedure. (*Id*.) Notably, KTI did not attempt to serve Petitioner at its principle place of

business in Shenzhen, China. KTI was nevertheless able to obtain a judgement of default against Petitioner on June 23, 2023. (*Id*., 2.)

After learning of the default judgement, counsel for Petitioner signed a waiver of the service of summons on July 5, 2023. (*Id*., 4.) On July 14, 2023, Petitioner timely moved to set aside the default judgement. (*Id*., 1.) KTI did not oppose the motion. On July 17, 2023, the district court granted Petitioner's motion and set aside the default judgement. (Ex. 1031, 1.) The court accepted the waiver of service and ordered Petitioner to file its Answer to the Complaint by August 4, 2023. (*Id*.) The court and the parties have proceeded based on the July 5, 2023 waiver of service date.

V. PRECISE RELIEF REQUESTED

Petitioner respectfully requests cancellation of claims 1–15 of the '602 patent based on the following grounds:

Ground 1: Claims 1–15 are unpatentable under pre-AIA 35 U.S.C. § 103(a) as being obvious over U.S. Patent Application Publication No. 2004/0245649 ("Imaoka") and U.S. Patent Application Publication No. 2006/0028573 ("Seo").

Ground 2: Claims 1–7, 9–11, 13, and 15 are unpatentable under pre-AIA 35 U.S.C. § 103(a) as being obvious over U.S. Patent Application Publication No. 2005/0077458 ("Ma") and U.S. Patent Application Publication No. 2006/0035415 (Wood").

The application for the ’602 patent was filed on May 16, 2008. (Ex. 1001, 1.) Imaoka was published on December 9, 2004. Seo was published on February 9, 2006. Ma was published on April 14, 2005. Wood was published on August 31, 2006. Therefore, Imaoka, Seo, Ma, and Wood qualify as prior art at least under pre-AIA 35 U.S.C. § 102(b). None of the references were considered during prosecution of the ’539 application (which led to the ’602 patent). (*See generally* Ex. 1004.)

Petitioner’s full statement of the reasons for the relief requested is set forth in detail below, and is supported by the Declaration of R. Jacob Baker, Ph.D., P.E. (Ex. 1002, ¶¶14–140), expert in the field of the ’602 Patent (*id*., ¶¶5–13; Ex. 1003).

VI. THE ’602 PATENT

A. Problems Purportedly Addressed

The ’602 patent is directed to an image sensor structure and an integrated lens module for “digital image products,” such as digital cameras, camera phones, video phones, fingerprint readers and so on. (Ex. 1001, 1:7–18; *see also* Ex. ¶¶29–33.) The ’602 patent purports to simplify the manufacturing process and lower costs compared to the “conventional” image sensor arrangements. (*Id*. at 1:18–2:45.)

The ’602 patent illustrates a “conventional” image sensor structure, where “chip 12 is settled on the substrate 11 and includes a light-sensing element 121 thereon.” (Ex. 1001, 1:23–30, FIG 1 (below).)

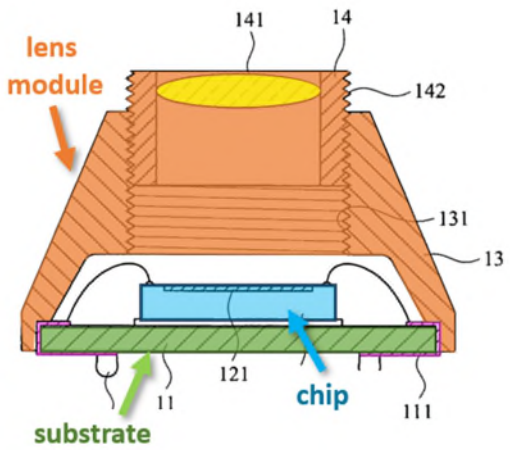

(Ex. 1001, FIG. 1.)[1]

According to the ’602 patent, this “conventional” arrangement undesirably requires the relative distance between lens and chip to be set to set the proper focal distance. (Ex. 1001, 1:35–59.) The complexity of this process can reduce yields and increase manufacturing costs. (Ex. 1001, 1:60–65.) In addition, the use of wire bonding to electrically connect the chip to wiring 111 on the substrate limits the minimum overall package size. (Ex. 1001, 1:42–48, 1:65–2:3.)

To address these drawbacks, the ’602 patent, proposes (1) “implementing the chip having conducting channels, which can be electrically connected to an external circuit without the means of wire-bonding” and (2) using the integrated lens module to assemble the image sensor structure” thereby simplifying the procedure to set the relative distance between the lens and the chip. (Ex. 1001, 2:7–20.) To achieve

[1] All color annotations throughout are added unless noted otherwise.

these ends, the ’602 patent describes an image sensor structure including a conducting channel passing through the chip and combining a bottom contact surface of a lens holder with the same surface of the chip on which the light-sensing elements are arranged. (Ex. 1001, 2:21–45; *see also id*. at 3:53–59 (“The holder 41 has a contact surface 412 on a bottom thereof for being combined with the first surface 34 of the chip 30 so that the lens module 40 can be *directly combined* with the first surface of the chip 30….”), FIG. 3.)

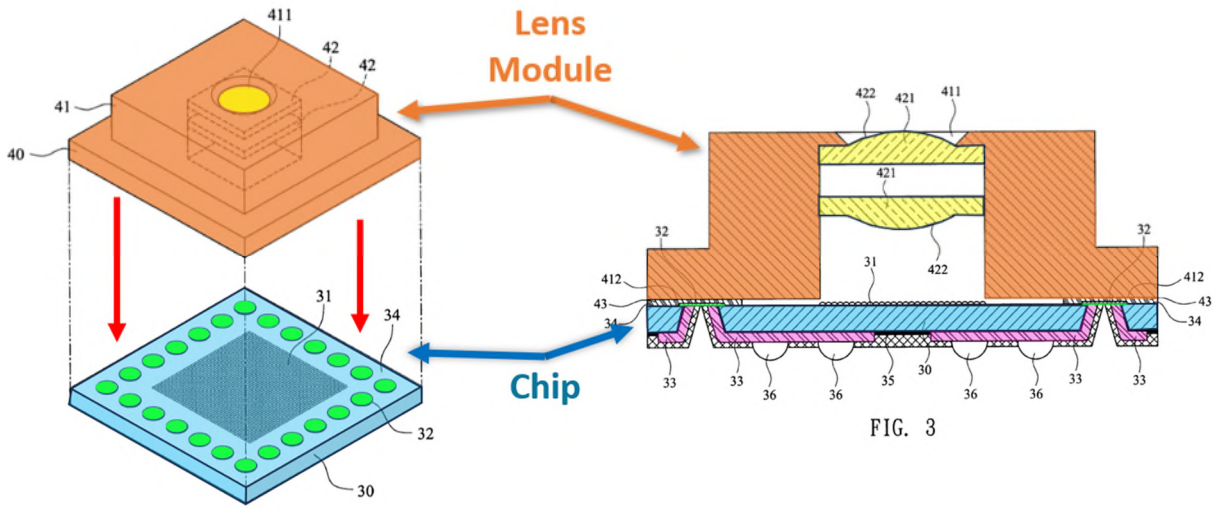

(Ex. 1001, FIG. 2, 3.)

Yet, notwithstanding the assertions of the ’602 patent, all of the features recited in the claims were well known in the prior art. (Ex. 1002, ¶¶22–33.) And, as discussed in more detail below, the same techniques presented as novel in the ’602 patent had in fact already been disclosed in the prior art. (*Id*.)

B. Level of Ordinary Skill in the Art

In the corresponding WDTX action between the same parties, KTI alleges that a POSA at the time of the alleged invention would have had (1) a Master of Science degree in engineering, with approximately two years of experience with semiconductor or image sensor packaging; or (2) a Bachelor of Science degree in engineering with approximately four years of experience with semiconductor or image sensor packaging. Petitioner and its expert, Dr. Baker, adopts KTI's definition solely for the purposes of this proceeding. (Ex. 1002 at ¶¶20–21.)

C. Claim Construction

In the corresponding WDTX action between the same parties, the court adopted Plaintiff's proposed construction of the term "chip" to mean "an integrated circuit (e.g., light sensing elements and associated circuitry) and associated electrical connections (e.g., conducting pads, conducting channels, etc.)." (Ex. 1032, 7–15.) The court explicitly agreed with Plaintiff's assertion that "chip" may include a printed circuit board (PCB)—and that it is not required to exclude a PCB from the structure of a "chip." (*Id*. at 13.) In doing so, the Court rejected the proposal that the meaning of "chip" was limited to being "formed on a flat piece of semiconductor material" in the context of the '602 patent. (*Id*.)

Regarding the phrase, "a plurality of first conducting pads arranged around the light sensing area," the court ruled that the phrase should be interpreted according

to its plain-and-ordinary meaning. (*Id*. at 18–19.) The court reasoned that the dictionary definitions, "on all sides of" and "in such a position as to encircle or surround," as proposed by Defendant, were overly restrictive. (*Id*. at 15–19.)

For IPR proceedings, the Board applies the claim construction standard according to *Phillips v. AWH Corp.*, 415 F.3d 1303 (Fed. Cir. 2005) (en banc). *See* 83 Fed. Reg. 51,340-59 (Oct. 11, 2018). Under *Phillips*, claim terms are typically given their ordinary and customary meanings, as would have been understood by a POSITA at the time of the invention. *Phillips*, 415 F.3d at 1313; *see also id*., 1312-16. The Board, however, only construes the claims when necessary to resolve the underlying controversy. *Toyota Motor Corp. v. Cellport Systems, Inc.*, IPR2015-00633, Paper No. 11 at 16 (Aug. 14, 2015) (citing V*ivid Techs., Inc. v. Am. Sci. & Eng'g, Inc.*, 200 F.3d 795, 803 (Fed. Cir. 1999)).

VII. DETAILED GROUNDS OF UNPATENTABILITY

A. Ground I – Claims 1–15 are obvious over Imaoka and Seo

1. Claim 1

Imaoka and Seo disclose or suggest every limitation of claim 1 of the '602 patent under pre-AIA 35 U.S.C. § 103(a), as set forth in further detail below. (Ex. 1002, ¶¶38–97.)

a. An image sensor structure with an integrated lens module

The preamble is not limiting. In general, there is a "presumption against reading a statement of purpose in the preamble as a claim limitation." *Marrin v. Griffin*, 599 F.3d 1290, 1294–95 (Fed. Cir. 2010); *Allen Eng'g Corp. v. Bartell Indus.*, 299 F.3d 1336, 1346 (Fed. Cir. 2002) ("Generally, the preamble does not limit the claims."). Here, the preamble is not limiting because, for example, it (i) merely states a purpose or intended use of the invention (*i.e.*, as an image sensor structure); (ii) does not impose any structural requirements beyond those explicitly provided in the claim body (*e.g.*, an image sensor chip and integrated lens module); (iii) is not relied upon for antecedent basis in the claim body; and (iv) was not relied upon during prosecution to distinguish from the prior art (*see* Ex. 1004). *Arctic Cat Inc. v. GEP Power Prods.*, 919 F.3d 1320, 1329-30 (Fed. Cir. 2019); *Shoes by Firebug LLC v. Stride Rite Children's Grp., LLC*, 962 F.3d 1362, 1367-68 (Fed. Cir. 2020).

Nevertheless, to the extent KTI contends the preamble is limiting, Imaoka discloses an optical module in the form of an image sensor module (*i.e.*, an image sensor structure). (*See, e.g.*, Ex. 1005, ¶¶0066–0073, FIG. 4 (reproduced below); Ex. 1002, ¶¶39–68.) Imaoka's optical module includes an optical device 1, a wiring substrate 60, and a substrate member 70 (*i.e.*, an integrated lens module) holding a lens 72. (*Id.*) As illustrated in Figure 4 (below), substrate member may include a

first part 74 and a second part 76 with the lens 72 attached to the first part 74 and fixed inside the first through hole 78. (*Id.*) Imaoka also discloses that the substrate member 70 can be a plurality of members that are mutually separable "or may be integrally constructed with one member." (Ex. 1005, ¶0068.)

FIG.4

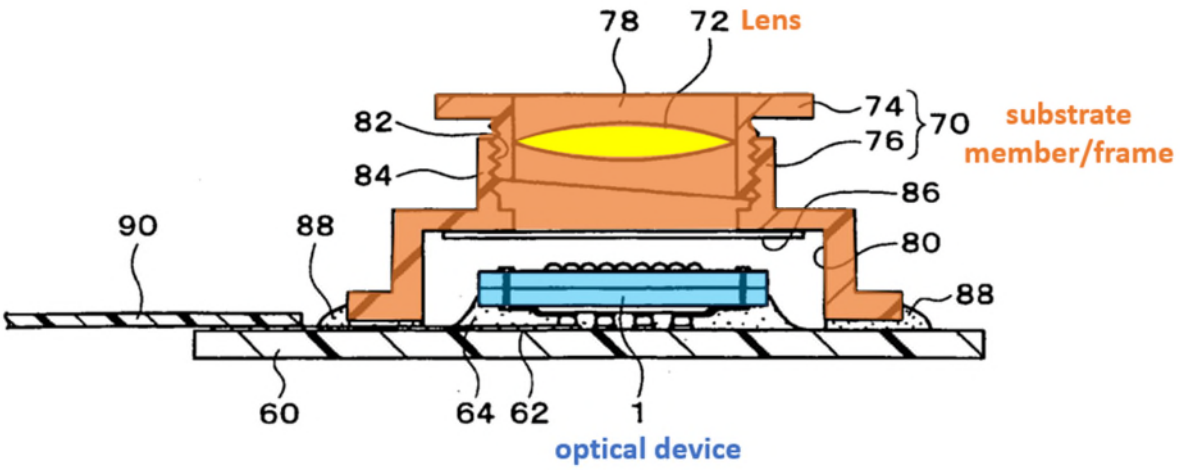

(Ex. 1005, FIG. 4.)

Seo, similar to Imaoka, discloses an image sensor camera module (*i.e.*, an image sensor structure) with integrated lens holder and lens (*i.e.*, an integrated lens module). (*See, e.g.*, Ex. 1006, ¶¶0012, 0018, 0022–0027, FIG. 2; Ex. 1002, ¶41.) For example, as illustrated in Seo's Figure 2, Seo's image sensor camera module having an image sensor 240 integrated with a lens holder 100. (*Id.*) The lens holder 100 contains at least one lens (*e.g.*, first lens 140 or second lens 180) which is securely adhered to the shoulder 120 inside the lends holder 100, and the image sensor camera module is mounted to an image sensor 240. (*Id.*) Figure 2 (below)

"is a cross-sectional view of an image sensor camera module." (Ex. 1006, ¶¶0018, 0022–0033.)

FIG. 2

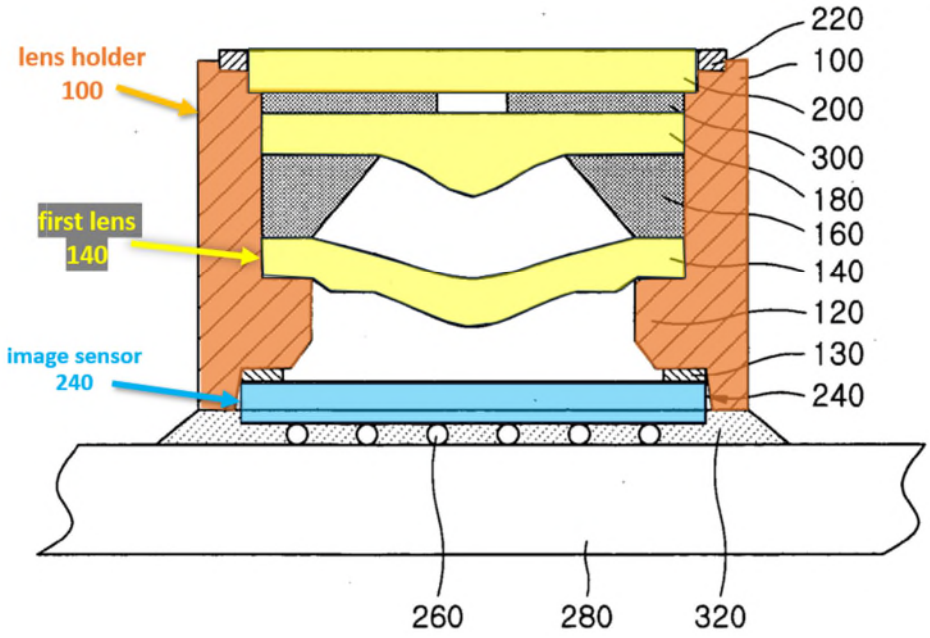

(Ex. 1006, FIG. 2.)

Additionally, the Imaoka-Seo combination (which combines the teachings of an image sensor chip like that of Imaoka with an integrated lens module like that of Seo) suggests an image sensor structure with an integrated lens module for the reasons discussed below. *See KSR Int'l Co. v. Teleflex Inc.*, 550 U.S. 398, 416 ("The combination of familiar elements according to known methods is likely to be obvious when it does no more than yield predictable results."). Additionally, the Imaoka-Seo combination discloses or suggests each of the remaining features of claims 1–15 for the reasons presented in Sections VII.A. (Ex. 1002, ¶¶38–97.)

b. a chip having a plurality of light-sensing elements arranged on a light-sensing area of a first surface of the chip

Imaoka discloses this limitation. (Ex. 1002, ¶¶43–47.) For example, Imaoka discloses a first semiconductor substrate 10 "may be a **semiconductor chip** (for example, a silicon chip)." (Ex. 1005, ¶¶0050, 0052, FIG. 1.) Further, Imaoka also states that semiconductor substrate 10 includes integrated circuit 12 (which may include, *e.g.*, light-sensing elements and associated circuitry) and associated electrical connections (*e.g.*, first pads 14, conducting parts 38, *etc*.). (*Id*.) In addition, semiconductor substrate 20 may contain integrated circuit 22 and second pads 24 and stacked and bonded together with semiconductor substrate 10. (Ex. 1005, ¶¶0050–0061.) This stacking and bonding occurs at the wafer level and thus, a POSA would have also understood Imaoka's optical device 1 to constitute a "chip." (Ex. 1002, ¶¶43–47.)

FIG.1

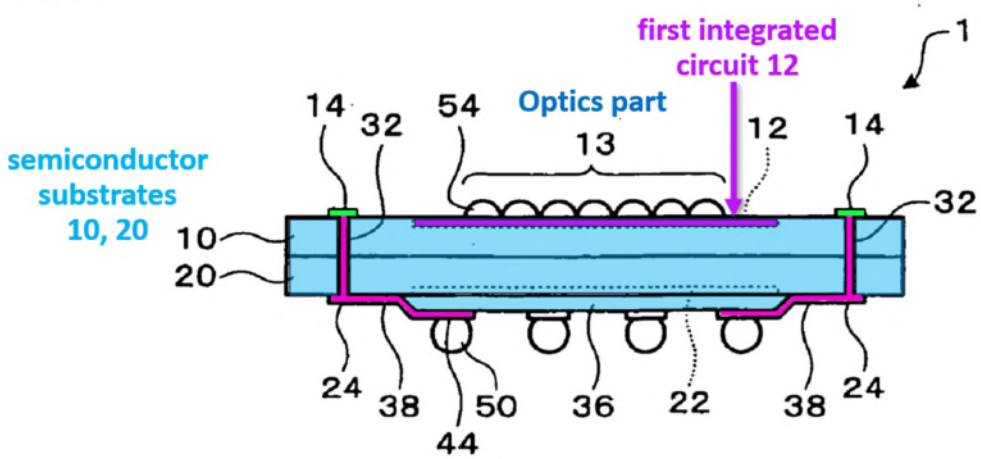

(Ex. 1005, FIG. 1.)

In the corresponding WDTX case, the Court adopted KTI's construction of "chip," namely, "an integrated circuit (e.g., light sensing elements and associated circuitry) and associated electrical connections (e.g., conducting pads, conducting channels, etc.)." (Ex. 1032, 15.) Imaoka's optical device 1 also satisfies the court's broader construction of "chip," namely, "an integrated circuit (e.g., light sensing elements and associated circuitry) and associated electrical connections (e.g., conducting pads, conducting channels, etc.)" at least because of the inclusion of integrated circuits 12, 22, and associated electrical connections, such as first pads 14 and conducting parts 38.

Imaoka also discloses the other aspects of limitation 1(b), namely the chip having a plurality of light-sensing elements arranged on a light-sensing area of a first surface of the chip. (Ex. 1002, ¶45.) As illustrated in Figure 1 (below), first integrated circuit 12 and an optical part 13 (*i.e.*, a light-sensing area) are formed on a surface of first semiconductor 10. (Ex. 1005, ¶0050 ("If the first semiconductor substrate 10 forms a rectangular parallelepiped, the first integrated circuit 12 is formed on either one of the surfaces (widest face) of the first semiconductor substrate."), ¶0052 ("The optical part 13 is a part to which light enters or from which light is emitted."), FIG. 1.)

FIG.1

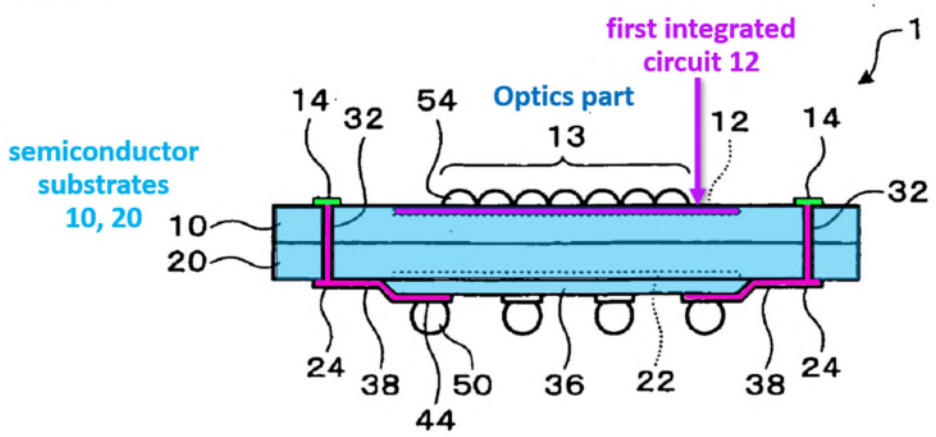

(Ex. 1005, FIG. 1.)

Imaoka further discloses that integrated circuit 12 and optical part 13 may include "[a] plurality of light-receiving elements" (*i.e.*, a plurality of light-sensing elements). (*See*, *e.g.*, Ex. 1005, ¶0052.) In particular, Imaoka states:

> The optical part 13 converts optical energy and other energies (for example, electrical energy). Namely, the optical part 13 has at least one energy converter (not illustrated). The energy converter … is a part of the first integrated circuit 12. In this embodiment, the energy converter is the light-receiving element (for example, a photodiode). (Ex. 1005, ¶0052.)

Imaoka states that the light-receiving elements are arranged so as to "enable image sensing by corresponding to each of a plurality of pixels two-dimensionally arrayed." (Ex. 1005, ¶0052.) Hence, Imaoka teaches a optical part 13 having a plurality of light-sensing elements (*e.g.*, photodiodes) arranged on a light-sensing

area of a first surface of a the optical device, as recited by limitation 1(b). (Ex. 1002, ¶¶43–47.)

c. a plurality of first conducting pads arranged around the light-sensing area and electrically connected to the light-sensing elements

Imaoka discloses this limitation. (Ex. 1002, ¶48.) For instance, Imaoka discloses first pads 14 (*i.e.*, a plurality of conducting pads) surrounding (*i.e.*, arranged around) the first integrated circuit 12 and optical part 13 (*i.e.*, the light-sensing area) and electrically connected to the light-receiving elements/photodiodes (*i.e.*, the light-sensing elements). Ex. 1005, ¶0050 ("At least one of the **plurality of first pads 14 is electrically connected to the first [integrated] circuit [12]**. … The plurality of first pads 14 may be arrayed at an end (along at least one side (for example, … four opposite sides) of the semiconductor substrate 10 (for example, a semiconductor chip). **The plurality of first pads 14 may be arrayed in a manner of surrounding the first integrated circuit 12**."), 0052 ("The energy converter (a light-receiving element and a light emitting device) is a part of the first integrated circuit 12. In this embodiment, the energy converter is the light-receiving element (for example, a photodiode)."), 0057, FIG. 1.)

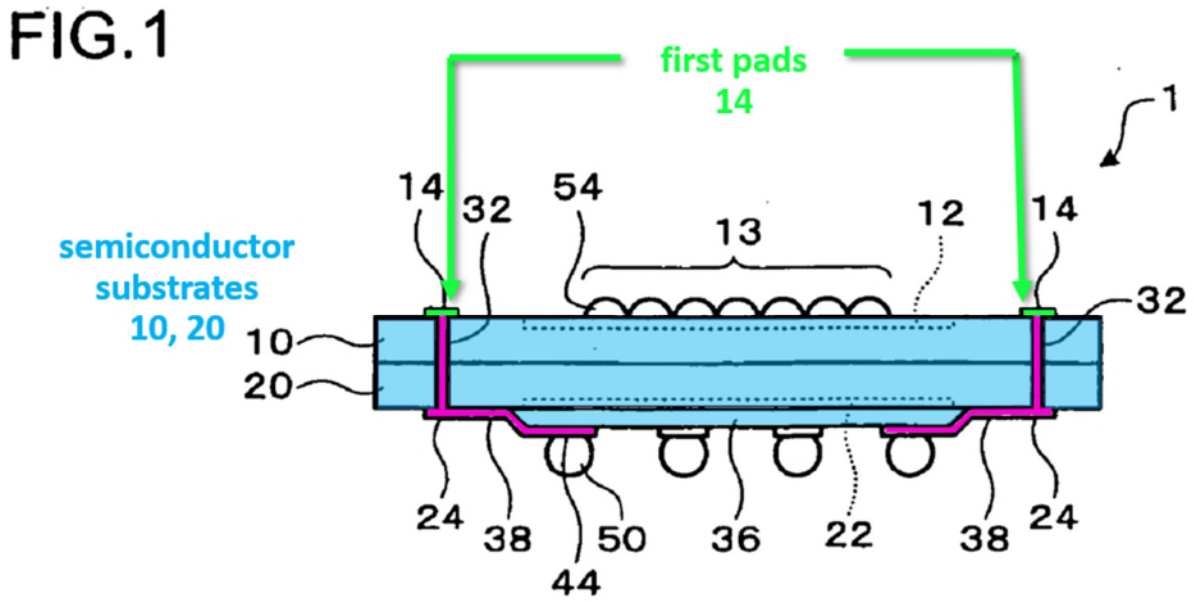

(Ex. 1005, FIG. 1.)

d. at least one conducting channel passing through the chip and electrically connected to the first conducting pads at one end as well as extending along with a second surface of the chip

Imaoka discloses this limitation. (Ex. 1002, ¶¶49–50.) For instance, Imaoka discloses conductive part 38 (*i.e.*, at least one conducting channel) is formed inside through-hole 32 and thus passes through the chip and is electrically connected to first pads 14 (*i.e.*, the first conducting pads) at one end. (*See*, *e.g.*, Ex. 1005, ¶¶0057–0065; FIGs. 1–7B.) In particular, Imaoka states "**conductive part 38 is formed inside the through-hole 32 [and] is electrically connected to at least one (both in FIG. 3) of the first and the second pad 14 and 24**." (Ex. 1005, ¶0059; FIG. 3.)

FIG.1

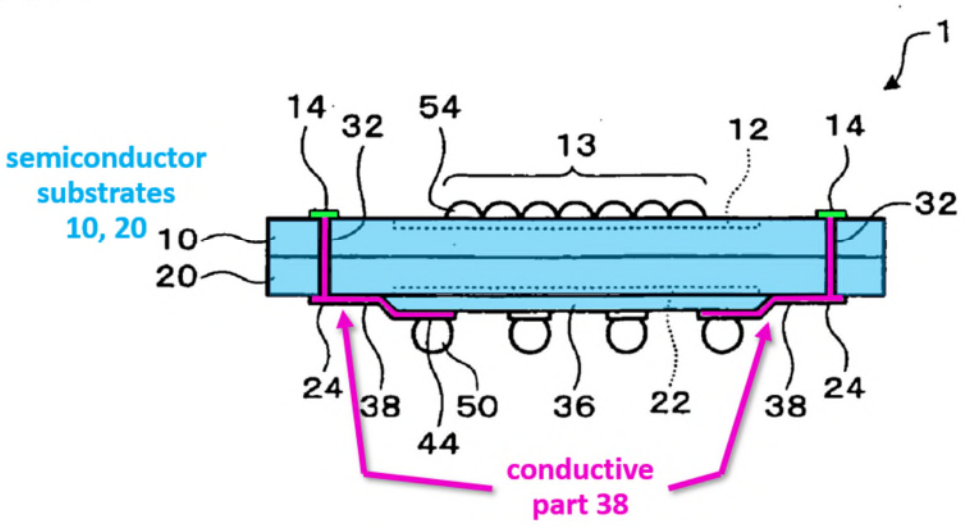

(Ex. 1005, FIG. 1.)

As illustrated in Figure 1 (above), Imaoka further discloses that, after passing through semiconductor substrates 10, 20, conductive part 38 extends along with a second surface of the chip. (Ex. 1002, ¶50.) For instance, Imaoka states that "conductive part 38 has an electrical connection 44 [that] is formed on the side of the surface of the second semiconductor substrate 20 opposite to the first semiconductor substrate 10." (Ex. 1005, ¶0060; FIGs. 1, 3.) This is also illustrated in Figure 1 where conductive part 38 extends along the bottom surface of semiconductor substrate 20, which is in turn (at least in part) parallel to the bottom surface of semiconductor substrate 10. Hence, conductive part 38 extends in the same direction as the bottom surface of semiconductor substrates 10, 20. (Ex. 1002, ¶50.)

e. a lens module comprising a holder having a through hole and a contact surface on a bottom of the holder

Imaoka and Seo each disclose and/or suggest this limitation. (Ex. 1002, ¶¶51–54.) For instance, Imaoka discloses a lens module comprising substrate member 70 (*i.e.*, a holder) that holds a lens 72 and has a first and second hole 78, 80 (*i.e.*, a through hole) in communication with each other and surface (*i.e.*, a contact surface) on a bottom of substrate member 70 adhered to wiring substrate 60 by an adhesive 88. (*See*, *e.g.*, Ex. 1005, ¶¶0066–0073, FIG. 4.)

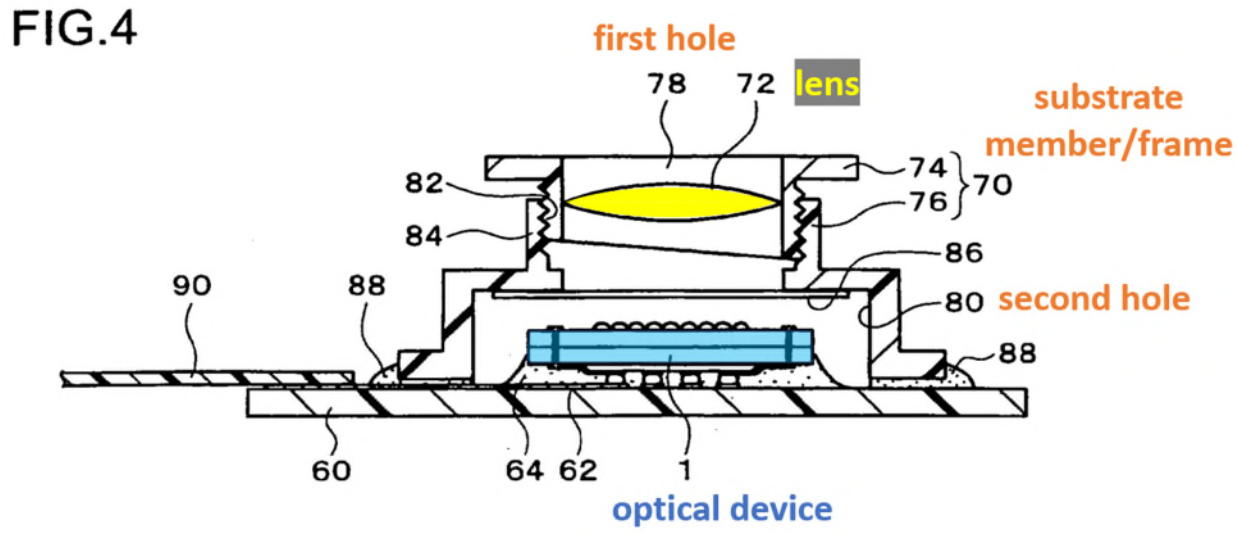

(Ex. 1005, FIG. 4.)

Seo discloses a lens module comprising lens holder 100 (*i.e.*, a holder) with a through hole that that holds lenses 140, 180. (*See*, *e.g.*, Ex. 1006, abstract ("The image sensor camera module uses a single-body type lens holder defined by a hollow cylindrical body"), ¶¶0022–0023, 0030 ("As shown in FIG. 4, in operation S1, the first lens 140, the first spacer 160, the second lens 180, and the second spacer 300 are inserted into the single body type lens holder 100."), FIGs. 2, 4, cl. 7 ("a lens

holder defined by a hollow cylindrical body with an axial opening therethrough into which first and second lenses are inserted”).)

FIG. 2

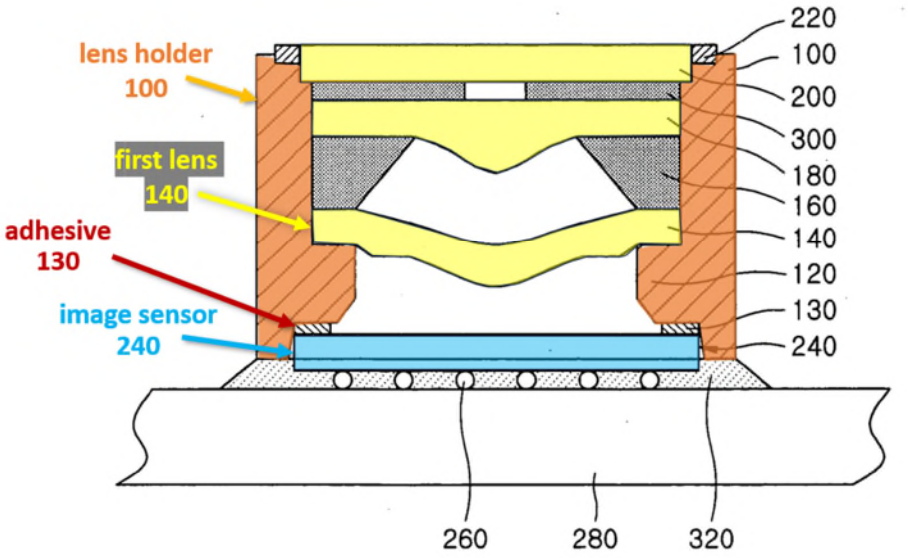

(Ex. 1006, FIG. 2.)

Seo also discloses that lens holder 100 has a shoulder 120 with an underside surface (*i.e.*, a contact surface) on a bottom of lens holder adhered to a top surface of the image sensor 240 by an adhesive 130. (*See*, *e.g.*, Ex. 1006, ¶¶0025 (“An upper surface (a surface opposite the surface that includes the connection terminals) of an image sensor 240 is directly adhered to the inner surface of the lens holder 100 under the first lens 140. The image sensor 240 may be adhered to an underside of the shoulder 120 using an adhesive 130 as shown in FIG. 2.”); Ex. 1002, ¶53.)

As Imaoka and Seo both disclose this limitation, the Imaoka-Seo combination as described in greater detail in the following section similarly suggests this feature.

f. wherein the contact surface is combined with the first surface

To the extent Imaoka does not disclose that the surfaces are combine in the same way as described the ’602 patent and prosecution history, Seo discloses this feature. (Ex. 1002, ¶¶55–64; *see also* Ex. 1001, 1:23–2:32 (distinguishing the prior art by having a contact surface of the lens module combined with a first surface of the chip); 3:53–59 (describing direct combination of surface via an adhesive), FIGs. 1–3, cl. 7, cl. 8; Ex. 1004, 34 (examiner recognizing that the Yang reference does not disclose combined surfaces as claimed).)

As illustrated in Figure 4, Imaoka shows that a bottom surface of substrate member 70 is mounted to wiring substrate 60 with an adhesive 88. (*See, e.g.*, Ex. 1005, ¶¶0066–0069, FIGs. 1, 4.) Although image sensor (optical device 1) is also mounted to wiring substrate 60, a bottom surface of substrate member 70 is not “combined with” top surface of optical device 1 in any direct sense.[2] (Ex. 1002, ¶55.)

[2] Petitioner reserves the right to show that Imaoka does disclose this feature should KTI advocate for a broader interpretation of “combined with” or the “first/contact surface”.”

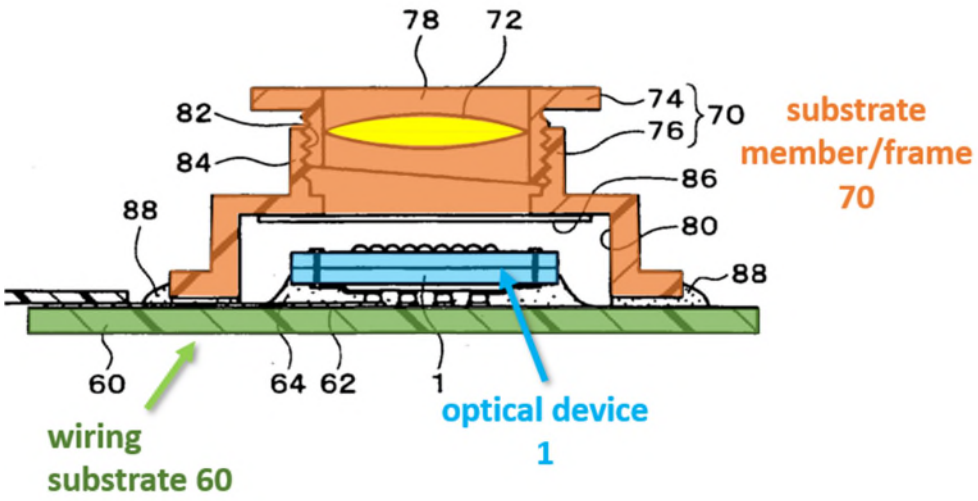

(Ex. 1005, FIG. 4.)

Seo discloses that lens holder 100 has a shoulder 120 with an underside surface (*i.e.*, a contact surface) on a bottom of lens holder adhered to a top surface of the image sensor 240 by an adhesive 130. (*See*, *e.g.*, Ex. 1006, ¶¶0025 ("An upper surface (a surface opposite the surface that includes the connection terminals) of an image sensor 240 is directly adhered to the inner surface of the lens holder 100 under the first lens 140. The image sensor 240 may be adhered to an underside of the shoulder 120 using an adhesive 130 as shown in FIG. 2."). Thus, Seo discloses this feature.

Furthermore, Seo suggests modifying Imaoka's image sensor module such that a contact surface of a lens holder is directly combined with the first surface of an image sensor chip. (Ex. 1002, ¶¶56–64.) The '602 patent distinguished indirect mounting arrangements by acknowledging its prevalence in the prior art and its drawbacks. (Ex. 1002, ¶¶22–33.) For instance, Figure 1 of the '602 patent

(reproduced below) illustrates a "conventional" image sensor structure, where "chip 12 is settled on the substrate 11 and includes a light-sensing element 121 thereon." (Ex. 1001, 1:23–30.)

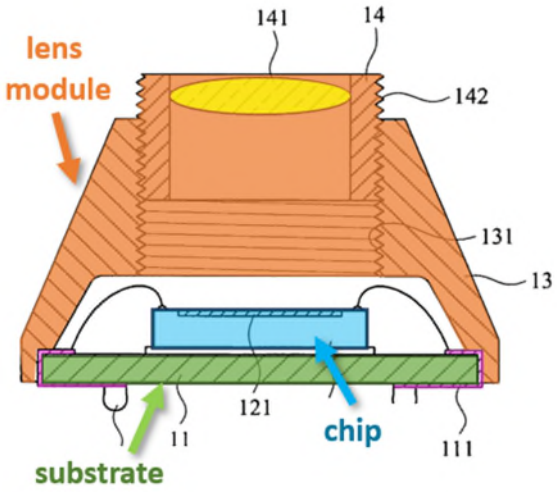

(Ex. 1001, FIG. 1.)

According to the '602 patent, this prior art arrangement undesirably requires the relative distance between lens and chip to be set to set the proper focal distance. (Ex. 1001, 1:35–59.) The complexity of this process can reduce yields and increase manufacturing costs. (Ex. 1001, 1:60–65.) In addition, the use of wire bonding to electrically connect the chip to wiring 111 on the substrate limits the minimum overall package size. (Ex. 1001, 1:42–48, 1:65–2:3.) To address these drawbacks, the '602 patent, proposes (1) "implementing the chip having conducting channels, which can be electrically connected to an external circuit without the means of wire-bonding" and (2) using the integrated lens module to assemble the image sensor structure" thereby simplifying the procedure to set the relative distance between the

lens and the chip. (Ex. 1001, 2:7–20.) To achieve these ends, the ’602 patent describes an image sensor structure including a conducting channel passing through the chip and combining a bottom contact surface of a lens holder with the same surface of the chip on which the light-sensing elements are arranged. (Ex. 1001, 2:21–45; *see also id*. at 3:53–59 (“The holder 41 has a contact surface 34 of the chip 30 so that the lens module 40 can be *directly combined* with the first surface of the chip 30….”), FIG. 3.)

As discussed Imaoka already addresses the volume constraint by implementing an image sensor chip without wire-bonding, where electrical channels instead pass through the chip itself. (Ex. 1005, ¶0004 (“Many of such methods were accomplished by techniques of bonding a wire to achieve electrical connection, but setting up a wire led to limiting the scope of miniaturization”), ¶0006 (““[T]he first and the second semiconductor substrate are electrically connected through a conductive part in the through-hole which continuously extends through these semiconductor substrates. Hence, it is possible to keep the outer dimensions of the optical device within a range of the outer dimensions of a stacked structure of the first and the second semiconductor substrate, thus enabling miniaturization.”).) This was well understood in the prior art. (Ex. 1002, ¶¶22–33, 61.)

Seo addresses the other drawback mentioned by the ’602 patent, namely the complexity of having to accurately set the positioning of a lens relative to the image

sensor chip so the camera is properly focused. (Ex. 1002, ¶¶24–25, 61.) For instance, Seo describes a conventional image sensor camera module, as illustrated below.

FIG. 1 (PRIOR ART)

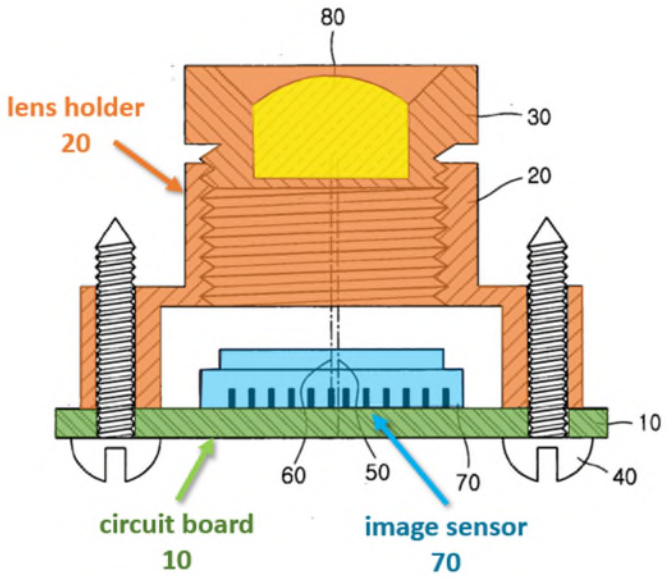

(Ex. 1006, FIG. 1.)

Similar to the conventional image sensor module described in the ’602 patent, Seo’s prior art image sensor camera module is completed by separately assembling the lens holder 20 and the image sensor 70 attached to the circuit board 10. (Ex. 1002, ¶60 Ex. 1006, ¶0007–0008, FIG. 1.) This arrangement necessarily requires alignment and adjustment of the lens 80 relative to the image sensor 70 to achieve proper focus. (Ex. 1006, ¶¶0007–0008, FIG. 1.) This may negatively impact the accuracy and reliability of the camera module. (*Id.*)

To address these drawbacks of the prior art, Seo proposes “an image sensor camera module which can be assembled without adjusting a focal length between a

lens and in image sensor." (Ex. 1006, ¶0009.) In particular, Seo discloses an image sensor camera module including a lens holder, one or more lenses installed inside the lens holder, an image sensor including an upper surface directly adhered to an inner surface of the lens holder. (Ex. 1006, ¶¶0012, 0022–0027; FIG. 2.) As a result, the lenses do not need to be adjusted as in the prior art, the assembly process is simplified, and "the probability of error or inaccuracy in fabricating the image sensor camera module is low when compared to that of the conventional image sensor camera module." (Ex. 1006, ¶0027.)

FIG. 2

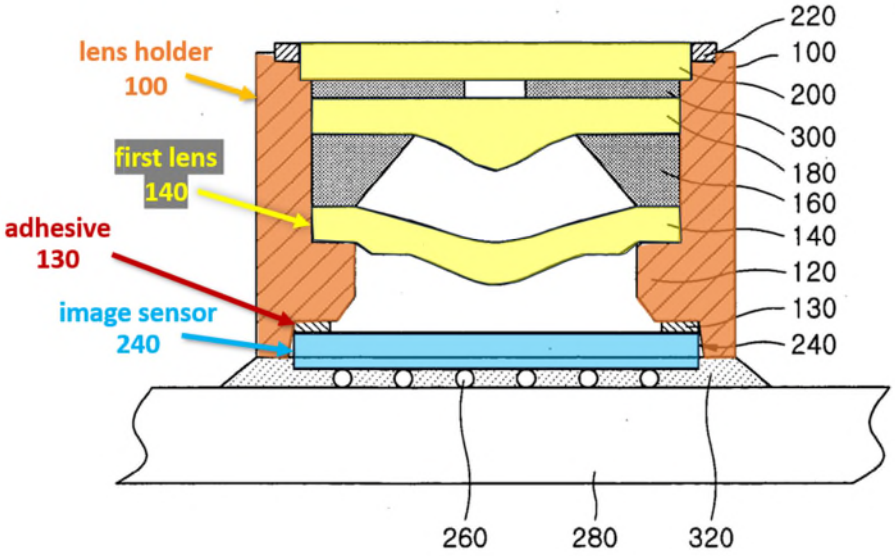

(Ex. 1006, FIG. 2.)

Thus, Imaoka and Seo are both from the same field of endeavor as the '602 patent (*i.e.*, image sensor structures and integrated lens modules. (*See* Ex. 1001, 1:6–12; Ex. 1002, ¶62.) Both Imaoka and Seo addresses the same or similar problems as purportedly addressed by the '602 patent (*e.g.*, reducing size,

simplifying assembly, and lowering costs). (*See* Ex. 1001, 2:7–20; Ex. 1002, ¶¶22–33, 62.) Accordingly, a POSA would have considered the teachings of Imaoka and Seo in designing an image sensor module.

Additionally, it would have been obvious to configure image sensor module (like one disclosed by Imaoka) such that it is combined with a lens module (like that of Seo) tor to modify the substrate structure/lens assembly like that of Imaoka so that a bottom surface of the substrate member/lens holder can be mounted directly to the upper surface of the image sensor in view of Seo's teachings and the knowledge of a POSA. (Ex. 1002, ¶63.) A POSITA would have been motivated to implement such a modification, *e.g.*, to simplify the assembly of the image sensor module, reduce costs, and improve the accuracy and repeatability of the process. (Ex. 1002, ¶63; *see also* Ex. 1006, ¶¶0038–0040 (describing the advantages of Seo's approach).)

A POSA would have been able to implement with an expectation of success given that such a modification would have involved known design techniques and components consistent with that known by a POSITA and contemplated by Imaoka and Seo. (Ex. 1002, ¶64.) For example, Seo provides examples of how to assemble a lens holder and image sensor (*e.g.*, as described in the flowchart of Figure 3 and illustrated in Figures 4–9), such as through the use of an adhesive. (Ex. 1002, ¶64; Ex. 1006, ¶¶0028–0038.)

g. at least one lens completely embedded inside the through hole and integrated with the holder

Imaoka and Seo each discloses this limitation. (*See*, *e.g.*, Ex. 1002, ¶¶65–68; Ex. 1005, ¶¶0068, 0069, FIG. 4 (reproduced below). For instance, the substrate member 70 can be integrated constructed with one member and includes the first part 74 and second part 76, the lens is attached to the first part 74 and fixed to inside the first through hole 78. Imaoka discloses a lens 72 completely enclosed by inside first hole 78 as shown in Figure 4 below. (Ex. 1005, ¶0069 ("The substrate member 70 includes a first and a second part 74 and 76. The lens 72 is attached to the first part 74. … In particular, the first part 74 has a first hole 78 and the lens 72 is held inside the first hole 78.")

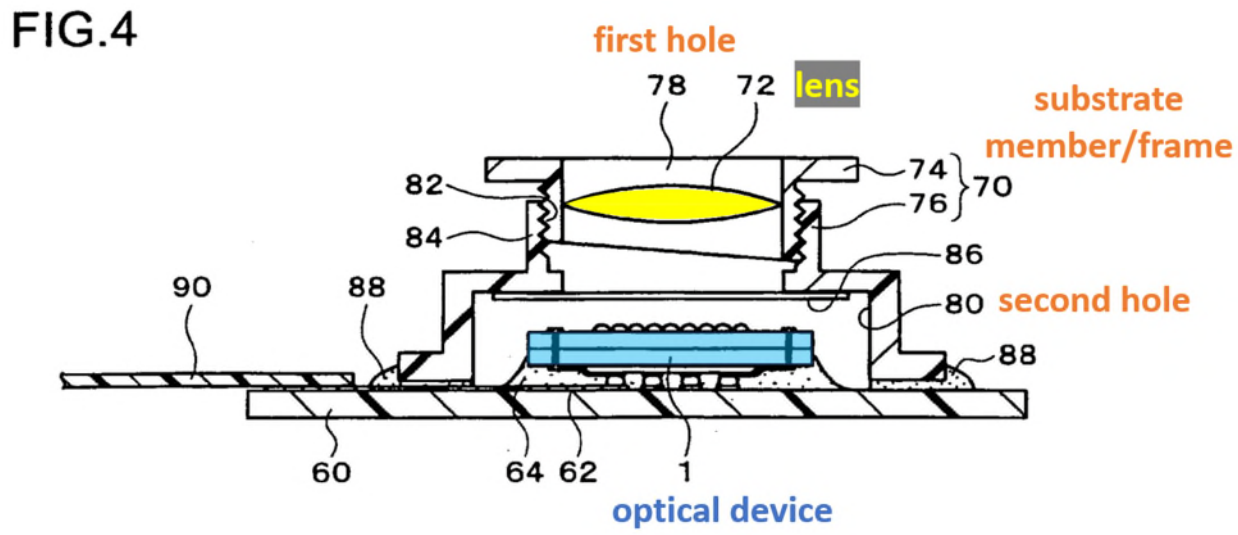

(Ex. 1005, FIG. 4.)

Seo also discloses this limitation. (Ex. 1002, ¶66.) For instance, Seo discloses a lens holder "defined by a single generally cylindrical body having an opening extending axially therethrough" and a first lens (*i.e.*, a least one lens) "installed

inside the lens holder.". The lens 140 is securely adhered to the shoulder 120 inside the lends holder 100. The uniform dimensions of the holder 100 and the shoulder 120 integrally formed therewith support the first lens 140 in a fixedly predetermined position, thus defining a fixed focal length or distance and a fixed focal axial alignment. (Ex. 1006, ¶0010; *see also id*. at ¶¶0012–0015, 0022–0023, 0031, 0032, FIGs. 2–4.)

FIG. 2

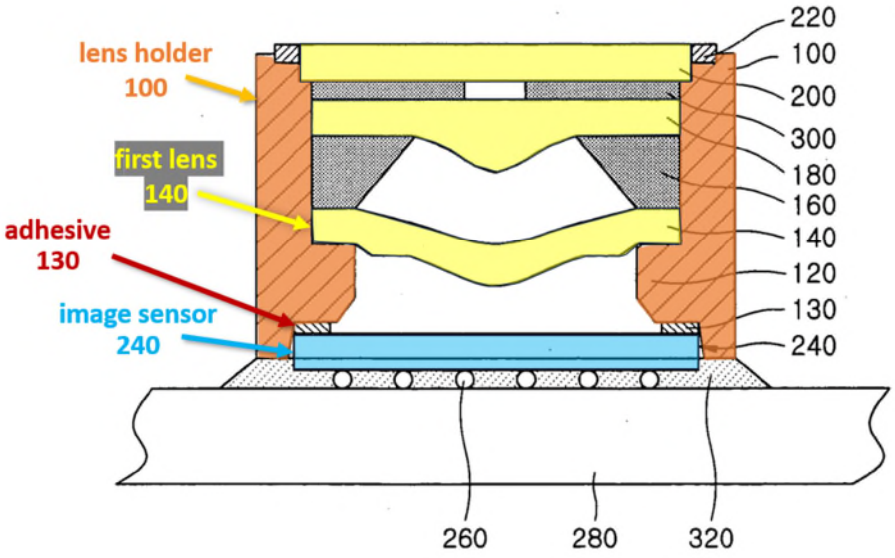

(Ex. 1006, FIG. 2.)

A POSA would have understood from Seo's description and the accompanying figures that at least lens 140 and lens 180 is completely embedded inside the through hole and integrated with the holder. (Ex. 1002, ¶67; Ex. 1006, FIG. 6.)

As Imaoka and Seo both disclose this limitation, the Imaoka-Seo combination as described herein would have naturally resulted from the combined teachings and thus similarly suggests the claimed feature.

2. Claim 2 – The image sensor structure as claimed in claim 1, wherein the chip is a complementary metal oxide semiconductor (CMOS) image sensor chip

Imaoka discloses this limitation. (Ex. 1002, ¶69.) For instance, Imaoka discloses the chip is a complementary metal oxide semiconductor (CMOS) image sensor chip. (Ex. 1005, ¶0052 ("[T]he optical device may be an image sensor (for example a CCD image sensor or a CMOS image sensor.") A POSA would have understood "CMOS image sensor" to refer to a complementary metal oxide semiconductor (CMOS) image sensor chip. (Ex. 1002, ¶69; *see also* Ex. 1006, ¶0026 ("Here, the image sensor 240 may be a suitable Charge Coupled Device (CCD) or a Complementary Metal-Oxide-Semiconductor (CMOS) image sensor".)

3. Claim 3 – The image sensor structure as claimed in claim 1, wherein the chip further comprises a plurality of second conducting pads or balls which are arranged on the second surface of the chip and electrically connected to the conducting channel

Imaoka discloses this limitation. (Ex. 1002, ¶70.) For instance, Imaoka discloses a plurality of second pads 24 (*i.e.*, second conducting pads) and solder balls 50 (*i.e.*, a plurality of balls) which are arranged on the second surface of the

semiconductor substrates 10, 20 and electrically connected to the conductive part 38 (*i.e.*, the conducting channel). (Ex. 1005, ¶¶0056–0060, FIGs. 1–3.)

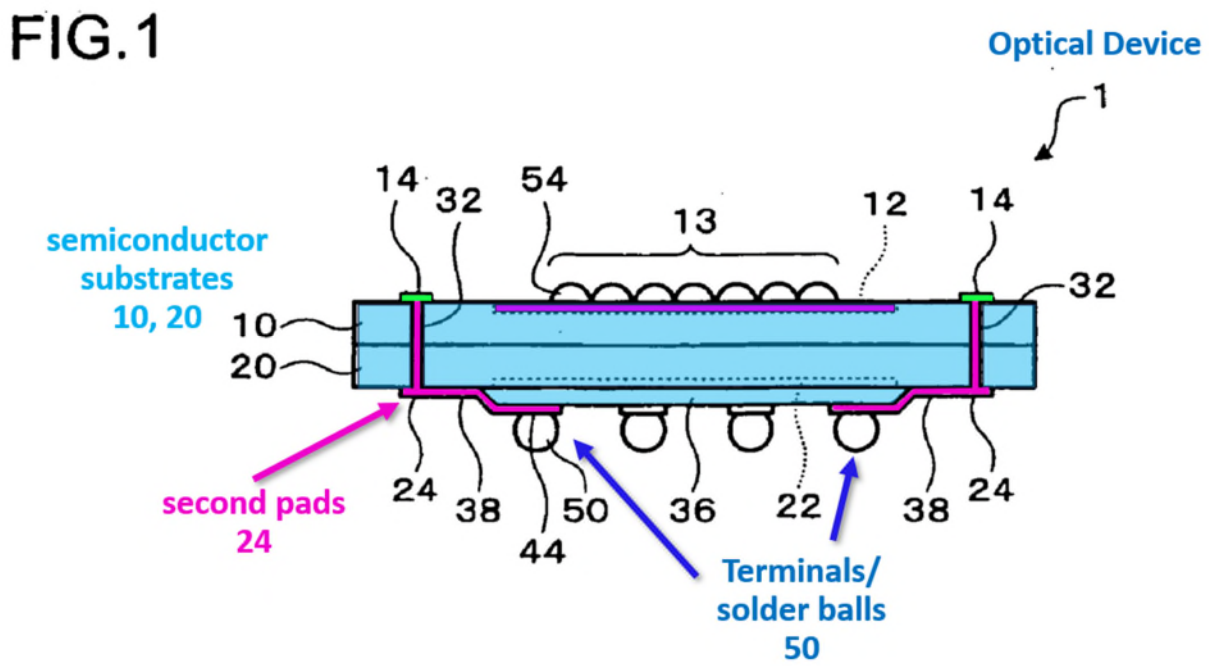

(Ex. 1005, FIG. 1.)

4. Claim 4 – The image sensor structure as claimed in claim 1, wherein the chip further comprises a ball grid array which is arranged on the second surface of the chip and electrically connected to the conducting channel

Imaoka discloses this limitation. (Ex. 1002, ¶71.) For instance, Imaoka discloses the semiconductor substrates 10, 20 includes solder balls 50 (*i.e.*, a ball grid array) is arranged on the second surface of the chip and electrically connected to the conductive part 38 (*i.e.*, the conducting channel). (Ex. 1005, ¶¶0056–0060, FIGs. 1–3.)

FIG.2

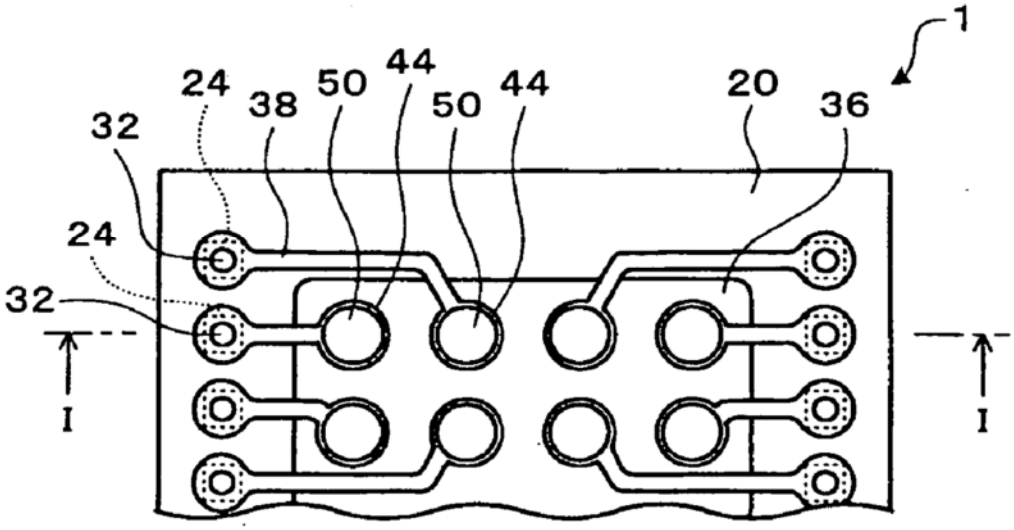

(Ex. 1005, FIG. 2.)

5. Claim 5 – The image sensor structure as claimed in claim 1, wherein a cavity is formed at the bottom of the holder

Imaoka discloses this limitation. (Ex. 1002, ¶¶72–74.) For instance, Imaoka discloses a second hole 80 (*i.e.*, a cavity) is formed at the bottom of the holder. (Ex. 1005, ¶0070, FIG. 4.)

FIG.4

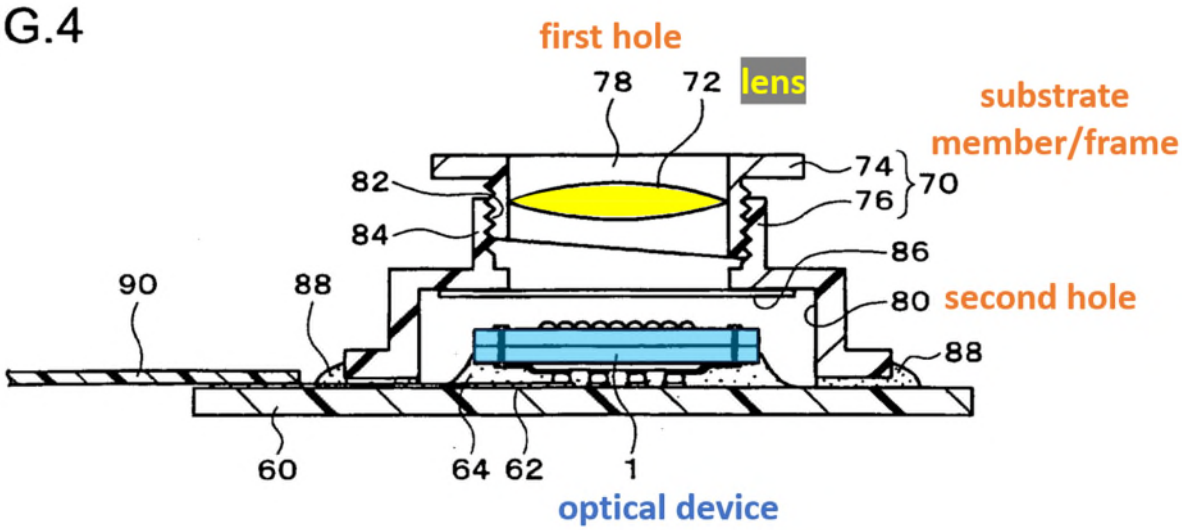

(Ex. 1005, FIG. 4.)

Seo discloses, *e.g.*, an opening (*i.e.*, a cavity) between shoulder 120 is formed at the bottom of the lens holder 100, as shown in Figure 2. (Ex. 1006, ¶¶0010, 0022, 0023, 0031, 0032, FIG. 2, 4.)

FIG. 2

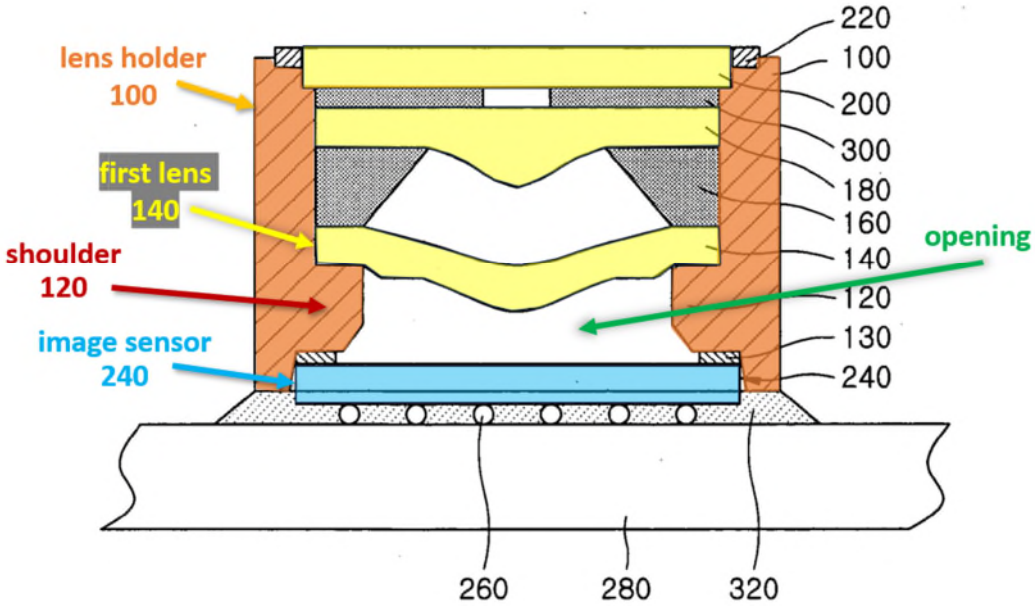

(Ex. 1006, FIG. 2.)

As Imaoka and Seo both disclose this limitation, the Imaoka-Seo combination as described herein would have naturally resulted from the combined teachings and thus similarly suggests the claimed feature.

6. Claim 6 – The image sensor structure as claimed in claim 1, wherein the holder is made of a plastic material or a metal material

Imaoka and Seo each disclose this limitation. (Ex. 1002, ¶¶75–76.) For instance, Imaoka discloses "substrate member 70 is formed of a light-shielding material (for example, a resin or a metal" (and hence, a metal material). (Ex. 1005,

¶0068.) Seo also discloses lens holder 100 "can be made of a material intercepting radio waves such as a plastic material or a metallic material." (Ex. 1006, ¶0024.)

As Imaoka and Seo both disclose this limitation, the Imaoka-Seo combination as described herein would have naturally resulted from the combined teachings and thus similarly suggests the claimed feature.

7. Claim 7 – The image sensor structure as claimed in claim 1, wherein the contact surface is combined with the first surface by an adhesive.

Imaoka and Seo each disclose this limitation. (Ex. 1002, ¶¶77–78.) For instance, Imaoka discloses that "substrate member 70 may be bonded to the wiring substrate 60 with an adhesive 88." (Ex. 1005, ¶0068, FIG. 4.) Further, Seo discloses that "image sensor 240 may be adhered to the underside of the shoulder 120 using adhesive 130 as shown in FIG. 2." (Ex. 1006, ¶¶0024, 0034, FIG. 2.)

FIG. 2

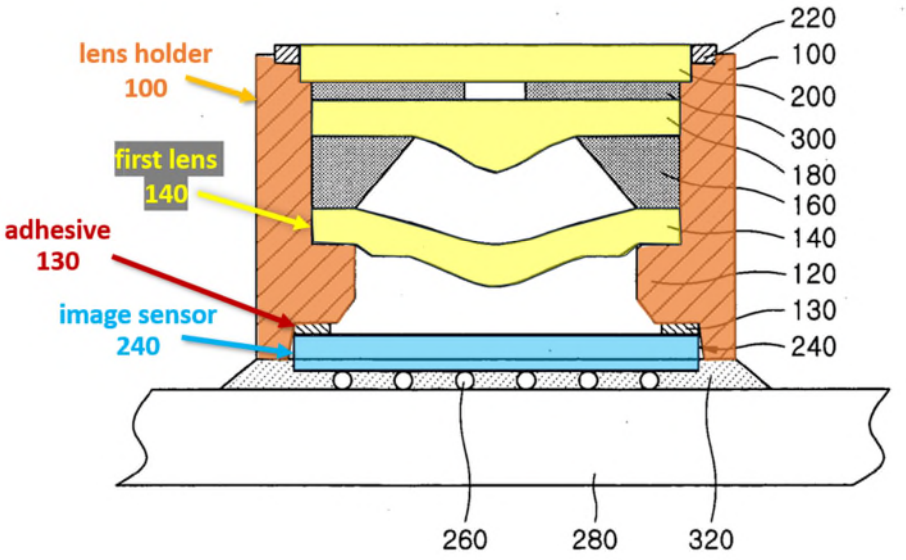

(Ex. 1006, FIG. 2.)

As Imaoka and Seo both disclose this limitation, the Imaoka-Seo combination as described herein would have naturally resulted from the combined teachings and thus similarly suggests the claimed feature.

8. Claim 8 – The image sensor structure as claimed in claim 1, wherein the contact surface is combined with the first surface by an UV curable adhesive.

Seo discloses this limitation. (Ex. 1002, ¶¶79–80.) For instance, Seo discloses that "adhesive 130 is any suitable adhesive and preferably is a thermosetting adhesive." (Ex. 1006, ¶0034.) A POSA would have understood a suitable adhesive to include a UV curable adhesive. (Ex. 1002, ¶79; *see also* Ex. 1006, ¶0036 ("Those of skill in the art will appreciate that … a thermosetting adhesive [] is capable of readily being hardened, e.g., [by] the application of heat or UV radiation.")

As Imaoka and Seo both disclose this limitation, the Imaoka-Seo combination as described herein would have naturally resulted from the combined teachings and thus similarly suggests the claimed feature.

9. Claim 9 – The image sensor structure as claimed in claim 1, wherein the lens is a plastic lens.

The Imaoka-Seo combination discloses/suggests this limitation. (Ex. 1002, ¶¶81–83.) As explained above, the Imaoka-Seo combination would have included at least one lens in the substrate member/lens holder. (*See* Section VII.A.1.) Although Imaoka does not expressly disclose the lens material, a POSA would have

found it obvious to choose a suitable material for the lens of the image sensor module and plastic was a well-known suitable material for lenses.[3] For example, consistent with the knowledge of a POSA, Seo teaches that first and second lenses 140 and 180 "may be made of any suitable glass, plastic, or other optical quality material" for use within an image sensor camera module. (Ex. 1006, ¶0024; Ex. 1002, ¶¶81–83.)

In light of Seo and a POSA's knowledge of suitable materials, a POSA would have been motivated to configure the Imaoka-Seo image sensor module to include a lens with an appropriate material, such as plastic. As the Supreme Court long ago stated, "reading a list and selecting a known compound to meet known requirements is no more ingenious than selecting the last piece to put into the last opening in a jig-saw puzzle. It is not invention." *Sinclair Co. v. Interchemical Corp.*, 325 U.S. 327, 335 (1944).

Further, plastic lenses were also well known in the art to have certain advantages, such as relatively low cost and light weight, which would have provided additional motivation to select plastic as a material for the lens. (Ex. 1002, ¶¶82–83.) Furthermore, such a modification would have allowed the lens to be formed

[3] The '602 patent does not describe the lens material as providing any criticality to the claimed invention. (*See generally* Ex. 1001.)

with known materials using known technologies/techniques (as demonstrated by Seo) leading to a reasonable expectation of success. (Ex. 1002, ¶¶81–83.)

10. Claim 10 – The image sensor structure as claimed in claim 9, which further comprises an IR cut filter glass which is embedded in the through hole and arranged below the plastic lens.

The Imaoka-Seo combination discloses/suggests this limitation. (Ex. 1002, ¶¶84–89.) For instance, Imaoka discloses the optical module includes an optical filter 86. (Ex. 1005, ¶0071.) Imaoka states that "optical filter 86 may be a filter which transmits only light having a specific wavelength (for example, visible light) or a filter having a small loss with respect to light of a specific wavelength (for example, visible light)." (Ex. 1005, ¶0071.) In other words, the filter may cut out nonvisible light, such as infrared radiation. (Ex. 1002, ¶84; *see also* Ex. 1005, ¶0071 (disclosing optical filter 86 may be an "infrared shield coat (IR coat).")

Further, Imaoka discloses that "optical filter 86 may be attached to the substrate member 70 (for example, the second hole 80)." (Ex. 1005, ¶0071.) As illustrate in Figure 4, optical filter 86 is embedded in the first/second hole 78, 80 (*i.e.*, the through hole) and arranged below the lens 72.

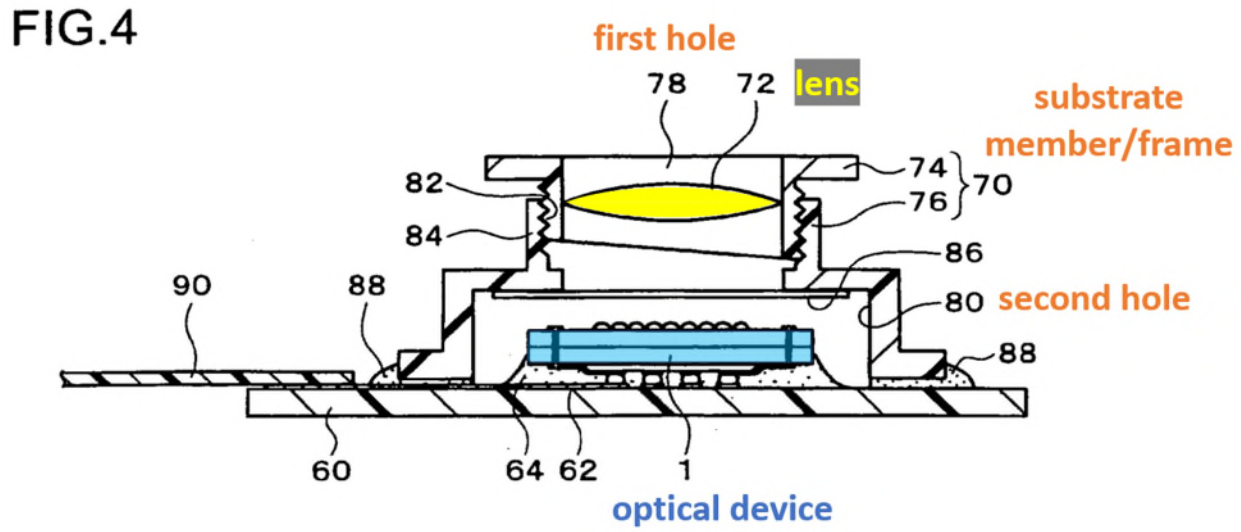

(Ex. 1005, FIG. 4.)

Thus, the Imaoka-Seo combination suggests an IR cut filter in the substrate member/lens holder below a plastic lens. (*See also* Section VII.A.9 (analysis of claim 9).) Although Imaoka does not expressly disclose the IR cut filter is an IR cut filter glass, a POSA would have found it obvious to choose a suitable material for the filter of the image sensor module and glass was well known suitable material for lenses.[4] (Ex. 1002, ¶¶85–87.) For example, consistent with the knowledge of a POSA, Seo teaches that filter 200 (which may be an IR filter) "may be made of any suitable glass, plastic, or other optical quality material" for use within an image sensor camera module. (Ex. 1006, ¶¶0024, 0031; Ex. 1002, ¶¶85–87.)

[4] The '602 patent does not describe the filter material as providing any criticality to the claimed invention. (*See generally* Ex. 1001.)

In light of Seo and a POSA's knowledge of suitable materials, a POSA would have been motivated to configure the Imaoka-Seo image sensor module to include an IR cut filter of an appropriate material, such as glass. *Sinclair*, 325 U.S. at 335.

Further, IR cut filters made on or from glass were also well known in the art to have certain advantages, which would have provided additional motivation to select glass as a material for the filter. (Ex. 1002, ¶89.) Furthermore, such a modification would have allowed the lens to be formed with known materials using known technologies/techniques (as demonstrated by Seo) leading to a reasonable expectation of success. (Ex. 1002, ¶¶85–89.)

11. Claim 11 – The image sensor structure as claimed in claim 1, wherein the lens is a glass lens.

The Imaoka-Seo combination discloses/suggests this limitation. (Ex. 1002, ¶¶90–91.) As explained above, the Imaoka-Seo combination would have included at least one lens in the substrate member/lens holder. (*See* Section VII.A.1(g).) Although Imaoka does not expressly disclose the lens material, a POSA would have found it obvious to choose a suitable material for the lens of the image sensor module and glass was a well-known suitable material for lenses.[5] For example, consistent with the knowledge of a POSA, Seo teaches that first and second lenses 140 and 180

[5] The '602 patent does not describe the lens material as providing any criticality to the claimed invention. (*See generally* Ex. 1001.)

"may be made of any suitable glass, plastic, or other optical quality material" for use within an image sensor camera module. (Ex. 1006, ¶0024; Ex. 1002, ¶¶90–91.)

In light of Seo and a POSA's knowledge of suitable materials, a POSA would have been motivated to configure the Imaoka-Seo image sensor module to include a lens with an appropriate material, such as glass. *Sinclair*, 325 U.S. at 335.

Further, glass lenses were also well known in the art to have certain advantages, such as relatively high durability and performance, which would have provided additional motivation to select glass as a material for the lens. (Ex. 1002, ¶¶90–91.) Furthermore, such a modification would have allowed the lens to be formed with known materials using known technologies/techniques (as demonstrated by Seo) leading to a reasonable expectation of success. (Ex. 1002, ¶¶90–91.)

12. Claim 12 – The image sensor structure as claimed in claim 11, wherein the glass lens is coated with an IR cut filtering layer

The Imaoka-Seo combination discloses/suggests this limitation. (Ex. 1002, ¶92.) As explained above regarding claim 11, it would have been obvious to select glass as a material for a lens in the image sensor module, such as lens 72. Further, Imaoka discloses that "lens 72 may be equipped with a function of the optical filter 86 … such as an infrared shield (IR coat)." (Ex. 1005, ¶0071.) Thus, a POSA would

have understood Imaoka to disclose a lens coated with an IR cut filtering layer as claimed. (Ex. 1002, ¶92.)

13. Claim 13 – The image sensor structure as claimed in claim 1, wherein the lens comprises a glass lens and a plastic lens, wherein the glass lens is arranged below the plastic lens

The Imaoka-Seo combination suggests this feature. (Ex. 1002, ¶¶93–95.) Although Imaoka only discloses a single focusing lens for the camera module, it was well known that camera modules conventionally included more than one lens. (Ex. 1002, ¶¶93–95; *see also, e.g.*, Ex. 1006, FIG. 2.) For example, camera modules typically utilized more than one lens to correct for optical aberration inherent in optical lenses, such as chromatic aberrations, astigmatism, field distortion, and others. (Ex. 1002, ¶93.) As discussed above, the choice of materials for such lens systems was routine part of optical design. (Ex. 1002, ¶94.) Material selection could depend of the desired characteristics of the lens individually (*e.g.*, lighter weight or higher durability) or as a system (e.g., aberrations created by a lens of one material may be compensated for by a lens of a different material). (Ex. 1002, ¶94.) Thus, selection of the number of lenses and choice of materials was a matter of routine design choice. (Ex. 1002, ¶¶93–95.) For instance, consistent with the knowledge of a POSA, Seo teaches that first and second lenses 140 and 180 "may be made of any suitable glass, plastic, or other optical quality material" for use within an image sensor camera module. (Ex. 1006, ¶0024; Ex. 1002, 94.) Hence, a POSA would

have envisioned suitable two-lens arrangements, such as a glass lens and a plastic lens, wherein the glass lens is arranged below the plastic lens. (Ex. 1002, ¶¶93–95.)

In light of Seo and a POSA's knowledge of suitable materials, a POSA would have been motivated to configure the Imaoka-Seo image sensor module to include two lenses with an appropriate material, such as glass and plastic, including herein the glass lens is arranged below the plastic lens. *Sinclair*, 325 U.S. at 335. Furthermore, such a modification would have allowed the lens to be formed with known materials using known technologies/techniques (as demonstrated by Seo) leading to a reasonable expectation of success. (Ex. 1002, ¶¶93–95.)

14. Claim 14 – The image sensor structure as claimed in claim 13, wherein the glass lens is coated with an IR cut filtering layer

The Imaoka-Seo combination discloses/suggests this limitation for the same reasons as discussed regarding claim 12. (Ex. 1002, ¶96.)

15. Claim 15 – The image sensor structure as claimed in claim 13, which further comprises an IR cut filter glass which is embedded in the through hole and arranged below the plastic lens

The Imaoka-Seo combination discloses/suggests this limitation for the same reasons as discussed regarding claims 9–11, and 13. (Ex. 1002, ¶¶81–91, 93–95, 97.)

B. Ground II – Claims 1–7, 9–11, 13, and 15 are obvious over Ma and Wood

1. Claim 1

Ma and Wood disclose and/or suggest every limitation of claim 1 of the ’602 patent under pre-AIA 35 U.S.C. § 103(a), as set forth in further detail below.

a. An image sensor structure with an integrated lens module

As discussed above in Section VII.A.1(a), the preamble is not limiting. Nevertheless, to the extent KTI contends the preamble is limiting, Ma discloses an integrally packaged imaging module (*i.e.*, an image sensor structure) including a lens support (*i.e.*, an integrated lens module). (*See, e.g.*, Ex. 1007, ¶¶0001, 0012, 0018–0023, 0027–0029, 0031, 0040 (“One embodiment of such a camera module includes an integrally packaged lens aligned to focus an image onto the image sensing device 107.”), FIGs. 1A, 3A, 3B, 4, 5A–5C, 7–8, and 9 (reproduced below); Ex. 1002, ¶¶98–120.) For example, Ma discloses a camera module 500 according to one embodiment. (*Id.*)

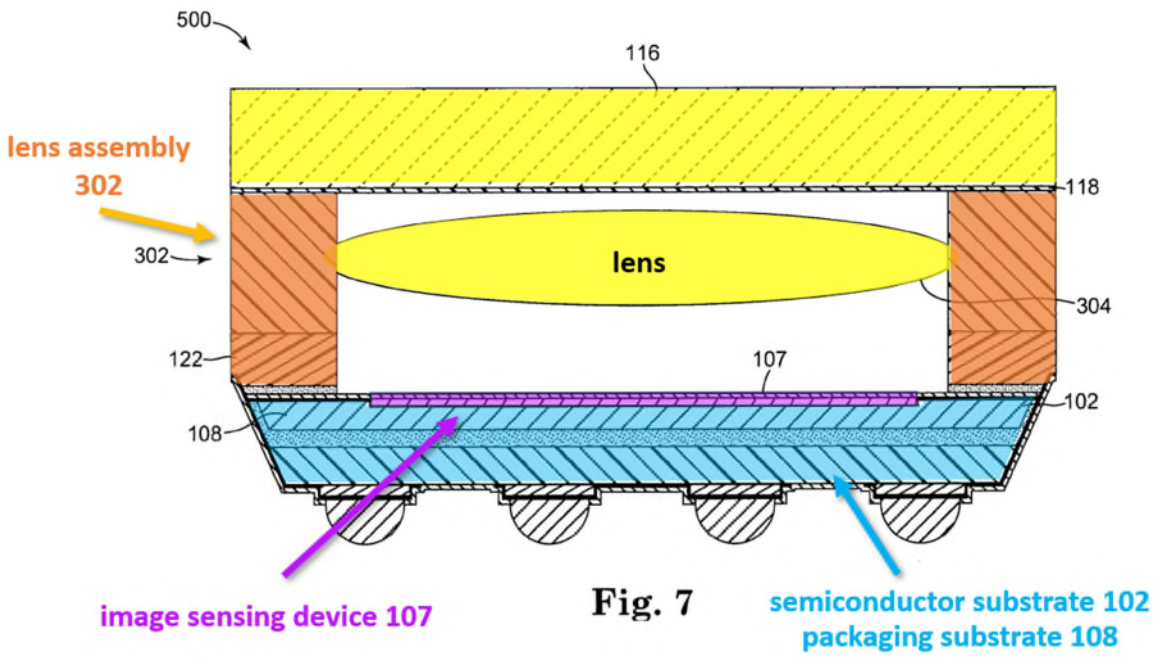

(Ex. 1007, FIG. 7 (illustrating one camera module embodiment).)

Additionally, the Ma-Wood combination discloses or suggests each of the remaining features of claims 1–7, 9–11, 13, and 15 for the reasons presented in Sections VII.B.1. (Ex. 1002, ¶¶98–120.) Ma discloses several embodiments that include many of the claim features, particularly embodiments described in connection with Figures 4 and 7–9. Any of these embodiments would have been modified with Woods teachings as described below. We note that Ma describes several aspects of the image sensor module 100 in relation to the embodiment of Figure 1, such as semiconductor substrate 102, redistribution structures 114, and electrical connections 112. Although Ma does not repeat that disclosure with respect to the other embodiments, the figures for those embodiments clearly illustrate those same components and a POSA would have understood them to be present. (Ex.

1002, ¶¶98–120; *see, e.g.*, Ex. 1007, ¶0050 ("The camera module 200*a* [shown in Figure 3A] includes semiconductor substrate 102, image sensing device 107, packaging substrate 108, electrical contacts 112, and redistribution structures 114."), ¶¶0058, 0072, 0073, 0075.)

b. a chip having a plurality of light-sensing elements arranged on a light-sensing area of a first surface of the chip

Ma discloses this limitation. (Ex. 1002, ¶¶103–106.) For example, Ma discloses an imaging module 100 (*which is also included in camera modules 200, 250, 300, etc*.) having semiconductor substrate 102, which "includes an active area 104 containing integrated circuitry 106, which includes an image sensing device 107, an image processor, interface logic, and power conditioning circuitry." (Ex. 1007, ¶¶0031–0034, 0050, FIGs. 1, 3A.) Ma states that semiconductor substrate 102 has an integrated circuit 106 (including, *e.g.*, an image sensing device 107 and associated circuitry) and associated electrical connections (*e.g.*, electrical contacts 112 and redistribution structures 114). (*Id*.) Thus, a POSA would have understood Ma's first imaging module 100 to include a "chip" as described by the '602 patent and would also have satisfied the district courts broader construction. (*See* Section VI.C.)

For similar reasons, a POSA would have considered Ma's combined semiconductor substrates 102, 108 may be considered a "chip" as claimed by virtue

of their combined wafer-level packaging. (Ex. 1002, ¶104; *see also* Ex. 1007, ¶0032 ("Imaging module 100 includes wafer-level packaging enclosing the semiconductor substrate 102. Wafer-level packaging technology is generally known in the art, and is sometimes referred to as **chip**-scale packaging (CSP). Wafer-level packaging technology permits integrated circuits formed on a wafer to be packaged for end-product use before being individually separated from the wafer by a dicing process.").)

Ma further discloses that image sensing device 107 (*e.g.*, a CMOS image sensor) has light-sensing pixels (*i.e.*, a plurality of light-sensing elements) arranged on an active area 104 (*i.e.*, a light-sensing area) of a first surface of the semiconductor substrate 102. (Ex. 1007, ¶0031, FIG. 1; *see also id.*, ¶0039, 0050.)

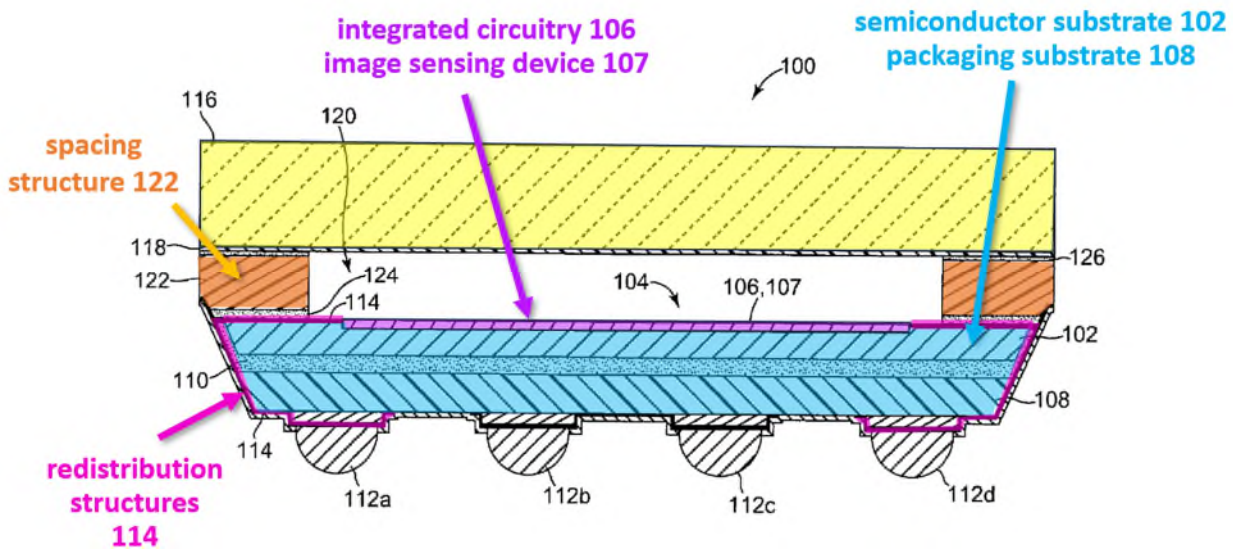

(Ex. 1007, FIG. 1.)

Based on the foregoing, a POSA would have understood Ma to disclose a chip having a plurality of light-sensing elements arranged on a light-sensing area of a first surface of the chip as claimed. (Ex. 1002, ¶¶103–106.)

c. a plurality of first conducting pads arranged around the light-sensing area and electrically connected to the light-sensing elements

d. at least one conducting channel passing through the chip and electrically connected to the first conducting pads at one end as well as extending along with a second surface of the chip

Ma and Wood disclose and/or suggest these limitations. (Ex. 1002, ¶¶107–114.) For instance, Ma discloses the "[f]or connecting electrical contacts 112 to integrated circuitry 106, imaging module 100 employs redistribution structures 114." (Ex. 1007, ¶0034.) As illustrated in Figure 1 (below), redistribution structures 114 are formed along the surfaces of semiconductor substrate 102, packaging substrate 108, and adhesive layer 110 at least at opposing sides of the of active area 104 (*i.e.*, a light-sensing area). (*Id*.)

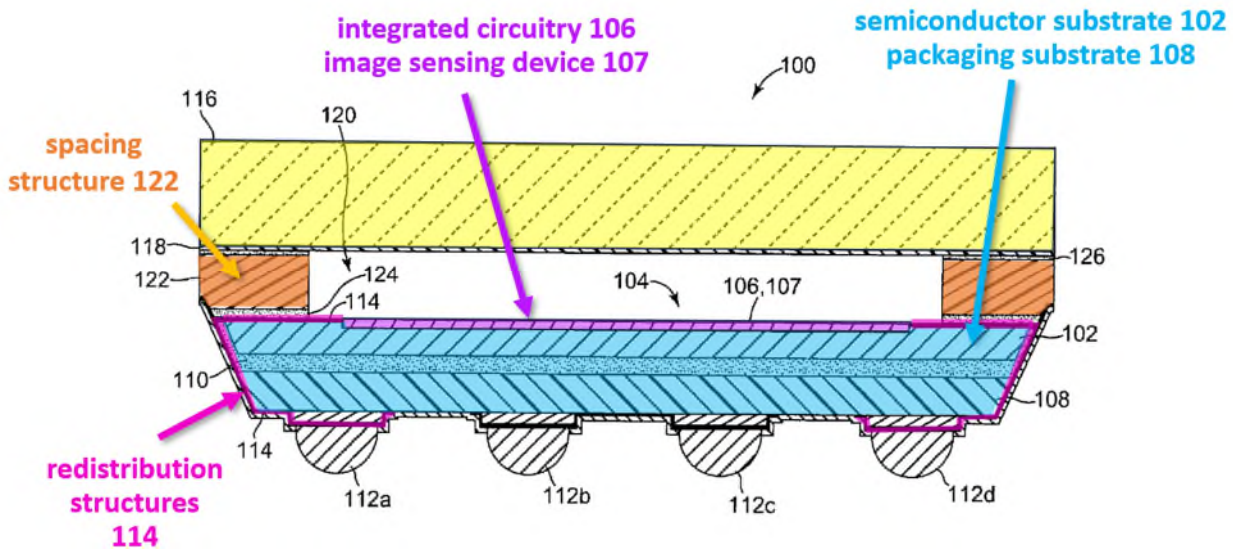

(Ex. 1007, FIG. 1.)

As was understood in the art, "imaging modules generally include an image sensor that detects an image and converts it into an electrical signal representation." (Ex. 1007, ¶0003.) Additionally, "[e]lectrical contacts provide connectivity between the imaging modules and the end products incorporating the imaging modules." (*Id.*) In light of these teachings and a POSA's ordinary knowledge of image sensors, a POSA would have understood that Ma's redistribution structures 114 electrically connect to the pixels (*i.e.*, light-sensing elements) of the image sensor 107. (Ex. 1002, ¶108.) Further, as illustrated above, Ma's redistribution structures 114 form a conducting channel passing around the substrates 102, 108 and extend along with a second surface of the substrates.

Ma also notes, however, that the form of the redistribution structures 114 is not limited to the arrangement shown in Figure 1. (Ex. 1002, ¶109.) Specifically,

Ma states that "[i]t will be recognized by one skilled in the art that a variety of wafer level/CSP technologies can be used for creating redistribution structures 114 that connect input/output nodes of the integrated circuitry 106 to the electrical contacts 112 within the wafer-level packaging." (Ex. 1007, ¶0034.)

Some of those technologies used for creating redistribution structures 114 are described by Wood. Wood is directed to semiconductor die-based image sensors and thus from the same field of endeavor as the '602 patent. (*See, e.g.*, Ex. 1001, 1:7–2:45; Ex. 1002, ¶¶110–113; Ex. 1008, ¶¶0003–0007, 0015, 0019.) Wood also describes solutions to reduce the size and fabrication cost of an image sensor module and thus addresses a similar problem to the '602 patent. (*See, e.g.*, Ex. 1001, 1:7–2:45; Ex. 1002, ¶111; Ex. 1008, ¶¶0005, 0025.) One of those solutions to reducing size is to use a through-wafer technique, which alleviates the need for wire bonds/outer electrical connections and allows a reduction in the overall size of a chip-scale image sensor package. (*See* Ex. 1002, ¶¶111–112; Ex. 1005, ¶¶0004–0006, 0021–0035; Ex. 1008, ¶¶0045; Ex. 1010, ¶¶0004–0024, 0088–0092, FIGs. 1–3, 13.) This solution to the well-known desire to reduce size, cost, and other known benefits was well described in the art by the time of the alleged inventions. (*Id.*)

Notably, while Wood describes electrical connections for semiconductor dies having wire bonds 32, conductors 28, and external connectors 36 that extend around the outer surface of a semiconductor chip (similar to that of Ma), Wood also

discloses, as a known alternative, the use of vias 29 extending from and connected to bond pads 26 to terminal pads 36′ on the back side 24 of the die. (Ex. 1008, ¶¶0045, 0077, FIGs. 2, 10.) Specifically, as illustrated in Figure 10 of Wood (below), Wood discloses bond pads 26 (*i.e.*, a plurality of first conducting pads) arranged around an optically active region 11 (*i.e.*, a light-sensing area) and electrically connected to an imager array (*i.e.*, light-sensing elements) of an image sensor. (Ex. 1008, ¶¶0005, 0015, 0019, 0021, 0024, 0044–0045, 0076–0077, FIGs. 2, 10; Ex. 1002, ¶112.)

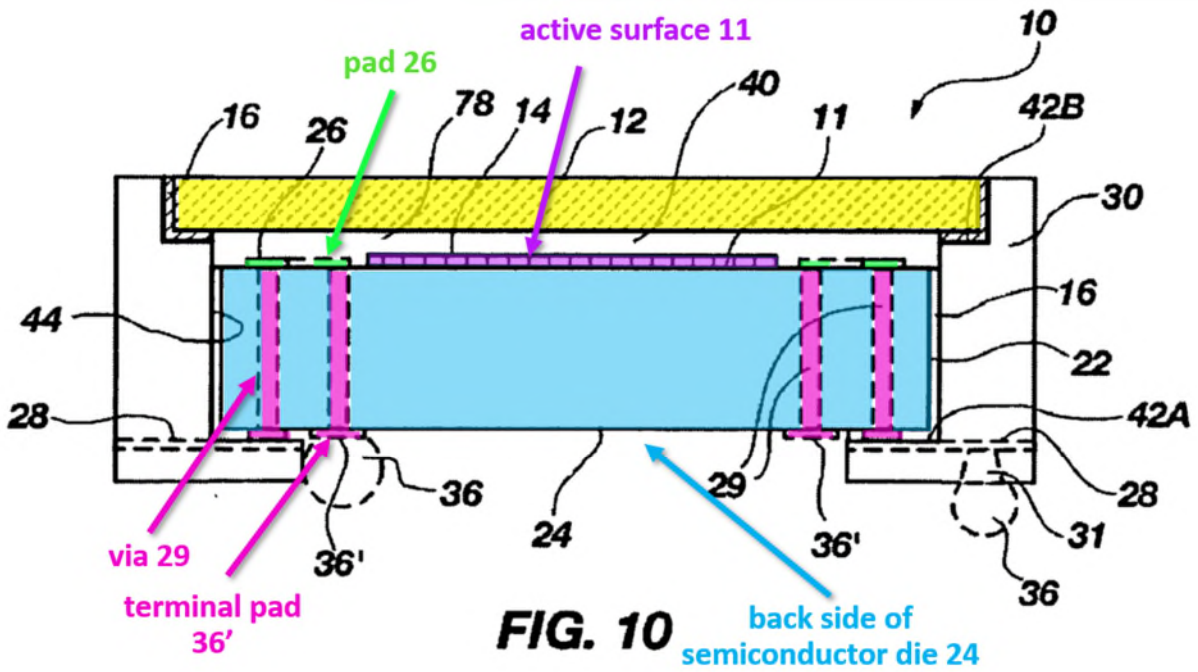

FIG. 10

(Ex. 1008, FIG. 10)

Wood also discloses vias 29/terminal pads 36′/redistribution layer (*i.e.*, conducting channels) passing through the semiconductor die 20 (*i.e.*, chip) and electrically connected to bond pads 26 (*i.e.*, the first conducting pads) at one end as

well as extending along with a second surface 24 of the semiconductor die 20. (Ex. 1008, ¶¶0005, 0015, 0019, 0021, 0024, 0044–0045, 0076–0077, FIGs. 2, 10; Ex. 1002, ¶113.)

Accordingly, in light of the recognized demands for a semiconductor image sensor package of small size and low cost and the recognized suitability of a though-wafer technique for electrical connections to meet those demands, it would have been obvious to a POSA to configure Ma's redistribution structures such that it satisfies limitations 1(b) and 1(c) at least in the same way as taught by Wood. (Ex. 1002, ¶114.) As evidenced by Wood (and Imaoka and others), employing such a technique would have been within the skill of a POSA. (*Id*.) The Ma-Wood combination suggests the claimed image sensor structure with an integrated lens module. *See KSR Int'l Co. v. Teleflex Inc.*, 550 U.S. 398, 417 (2007) ("[I]f a technique has been used to improve one device, and a person of ordinary skill in the art would recognize that it would improve similar devices in the same way, using the technique is obvious unless its actual application is beyond his or her skill."); *Intel Corp. v. PACT XPP Schweiz AG*, 61 F.4th 1373, 1380 (Fed. Cir. 2023) ("And if there's a known technique to address a known problem using prior art elements according to their established functions, then there is a motivation to combine.")

e. a lens module comprising a holder having a through hole and a contact surface on a bottom of the holder

Ma discloses this limitation. (Ex. 1002, ¶¶115–116.) For instance, Ma discloses a camera module 500[6] having, for example, lens assembly 302 (*i.e.*, a holder) (which optionally may be combined with spacing structure 122 in the FIG. 7 embodiment) having open space (*i.e.*, a through hole) for retaining a lens 304 and a contact surface on a bottom of the holder (*e.g.*, the bottom of lens assembly 302 or spacing structure 122 depending on the embodiment). (*See*, *e.g.*, Ex. 1007, ¶¶0039–0041 (describing a cavity above image sensing device 107), 0044–0047 (describing attachment of spacing structure 122 to semiconductor substrate 102), 0058–0061, 0072, FIGs. 4, 7 (below), and 9.)[7]

---

[6] Camera module 500 is a variation on camera module 300, which in turn includes imaging module 100 to which a lens assembly 302 is attached. (*See* Ex. 1008, ¶¶0058, 0072.)

[7] Ma discloses embodiments (FIGs. 4, 8, and 9) with similar lens support 252 in camera module 250 or lens assemblies 302*i* in camera modules 600 and 650 having through-holes and contact surfaces much like that shown in Figure 7.

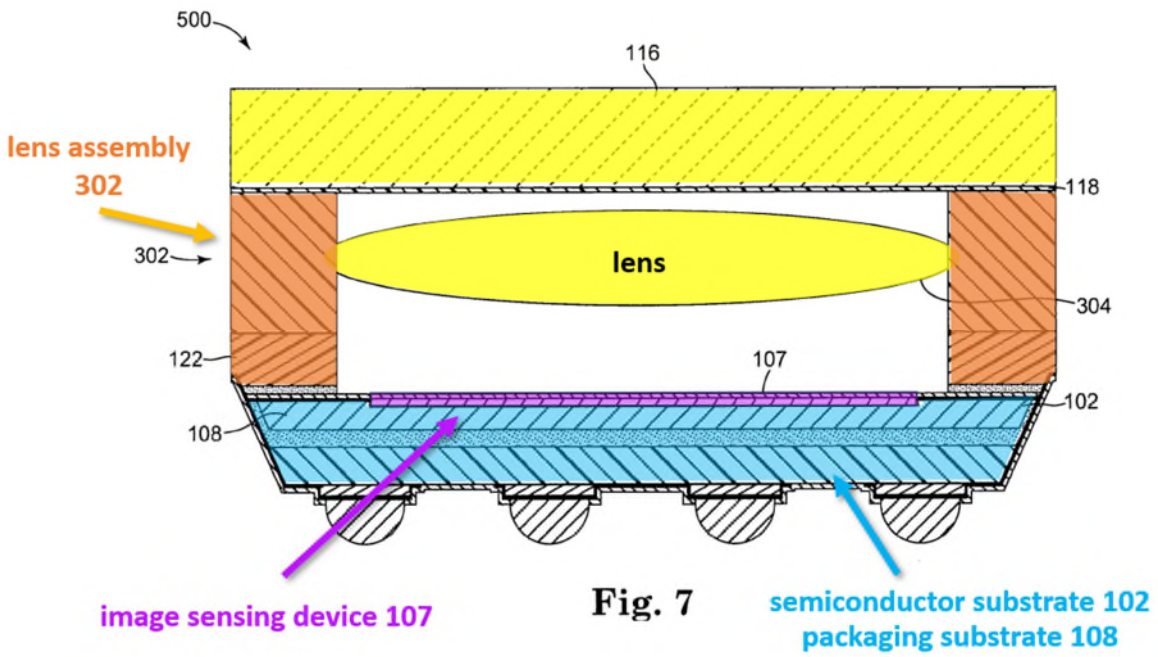

(Ex. 1007, FIG. 7.)

f. wherein the contact surface is combined with the first surface

Ma discloses this limitation. (Ex. 1002, ¶¶117–118.) For instance, as illustrated in Figure 7, Ma shows that a bottom surface of lens assembly 302/spacing structure 122 is combined with substrate 102. (*See, e.g.*, Ex. 1007, 0044 ("Spacing structure 122 is attached to semiconductor substrate 102 with an adhesive layer 124"), 0045–0047 (describing attachment of spacer 122 to semiconductor substrate 102), 0058–0061, 0072, FIGs. 4, 7 (below), 9.)[8]

[8] Ma discloses additional embodiments (FIGs. 4, 8, and 9) have a bottom surface of lens support 252 or lens assembly 302*i* combined with substrate 102 (via spacer 122). (Ex. 1002, ¶118; Ex. 1007, ¶¶0044, 0054–0055, 0072–0075.)

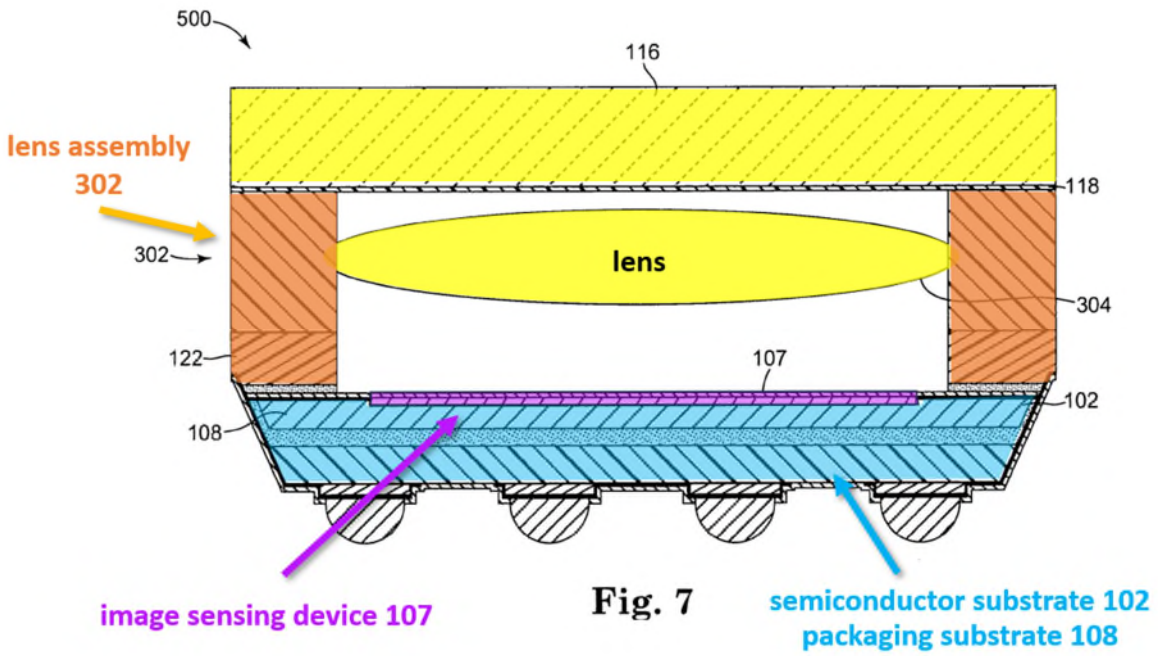

(Ex. 1007, FIG. 7.)

g. at least one lens completely embedded inside the through hole and integrated with the holder

Ma discloses this limitation. (Ex. 1002, ¶¶119–120.) For instance, Ma illustrates a lens 304 completely embedded inside the through-hole and integrated with the lens assembly 302/spacing structure 122, as shown in Figure 7 below. (*See, e.g.*, Ex. 1007, ¶¶0058 ("Lens assembly 302 includes a spacing structure 303 coupled to a lens 304."), 0063 (explaining that according to one embodiment the lens

assembly may be a single molded piece combining the lens and the spacing structure), 0072, FIG. 7 (below).[9]

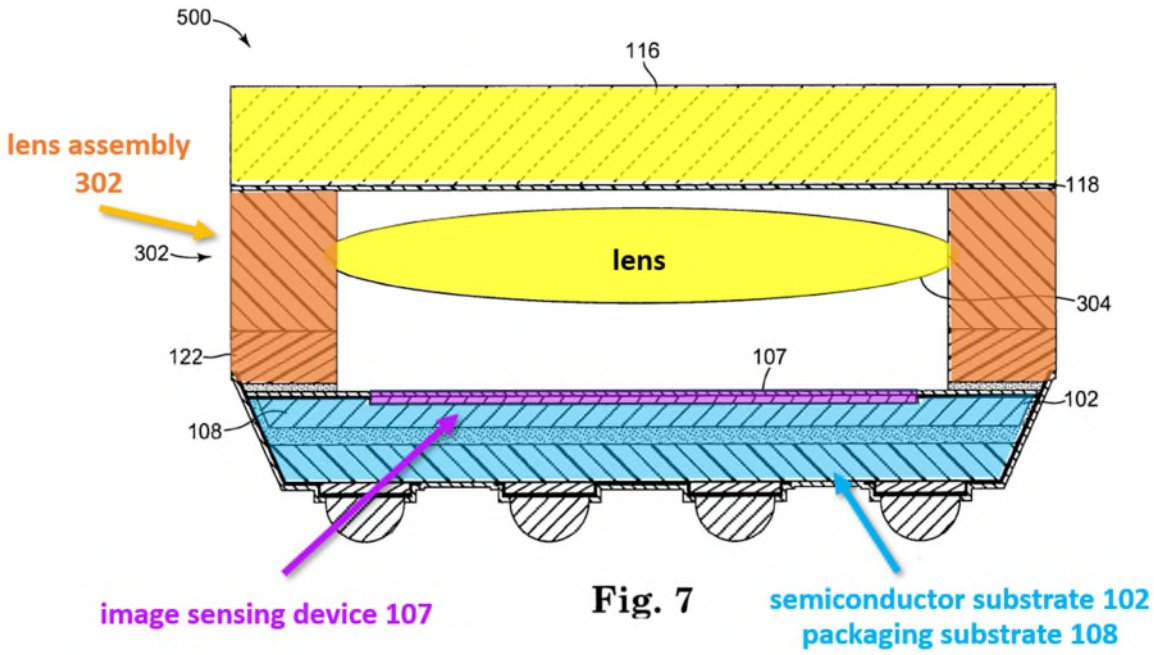

(Ex. 1007, FIG. 7.)

2. Claim 2 – The image sensor structure as claimed in claim 1, wherein the chip is a complementary metal oxide semiconductor (CMOS) image sensor chip

Ma discloses this limitation. (Ex. 1002, ¶121.) For instance, Ma discloses the image sensor device 107 may be "a CMOS technology image sensor." (Ex. 1007,

[9] Ma discloses additional embodiments (FIGs. 4, 8, and 9) with a lens 254 or 304*i* completely embedded inside the through hole and integrated with their respective lens supports. (Ex. 1002, ¶120; Ex. 1007, ¶¶0056, 0072–0075.)

¶0031.) A POSA would have understood "CMOS technology image sensor" to refer to a complementary metal oxide semiconductor (CMOS) image sensor. (Ex. 1002, ¶121; *see also* Ex. 1006, ¶0026 ("Here, the image sensor 240 may be a suitable Charge Coupled Device (CCD) or a Complementary Metal-Oxide-Semiconductor (CMOS) image sensor.").)

3. Claim 3 – The image sensor structure as claimed in claim 1, wherein the chip further comprises a plurality of second conducting pads or balls which are arranged on the second surface of the chip and electrically connected to the conducting channel

The Ma-Wood combination discloses and/or suggests this limitation. (Ex. 1002, ¶¶122–124.) For instance, Ma discloses that the image sensor module employs redistribution structures 114 connected to connecting electrical contacts 112. (Ex. 1007, ¶0034, FIGs. 1, 4, 7–9.) This is illustrated in Figure 1 (below). In addition, Ma discloses the electrical contacts 112 may include a plurality of solder bumps "situated in a standard ball grid array (BGA) configuration." (*Id*.)

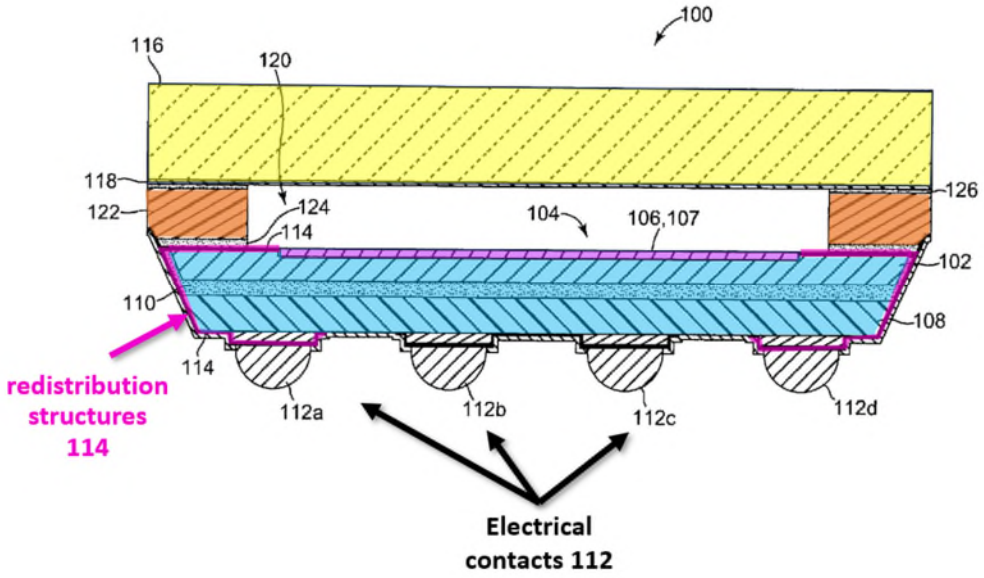

(Ex. 1007, FIG. 1.)

Similarly, Wood discloses that terminal pads 36′ may be formed over the conductive vias 29 on the back side 24 of the semiconductor die 20. (Ex. 1008, ¶0045.) And if desired "conductive bumps" may be formed on the terminal pads 36′, as known in the art, including a ball-grid array. (Ex. 1008, ¶¶0045, 0067, 0078, FIGs. 2, 10.)

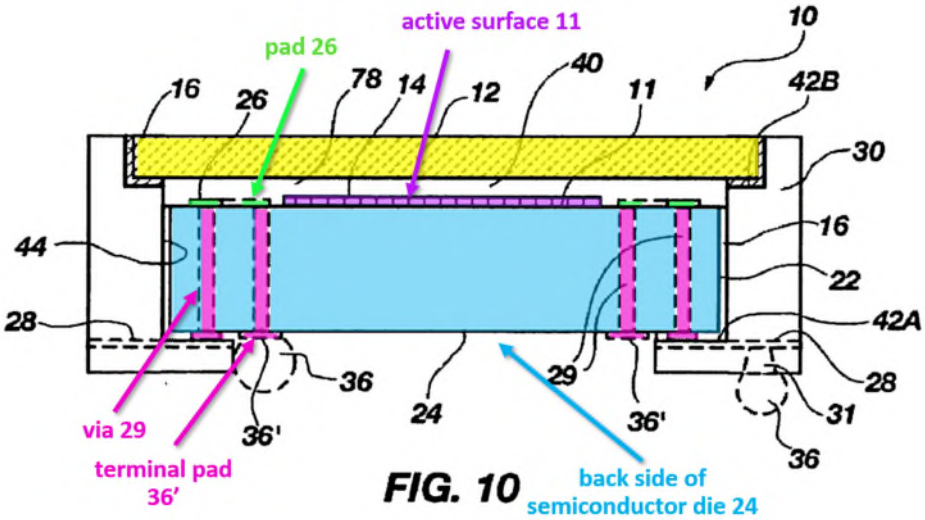

(Ex. 1008, FIG. 10.)

Thus, Ma-Wood combination (*e.g.*, implementing Ma's redistribution structures as contact pads connected to conductive vias extending to traces on the back side of a semiconductor die) suggests chip further comprises a plurality of second conducting pads or balls which are arranged on the second surface of the chip and electrically connected to the conducting channel as disclosed by Ma and Wood. (Ex. 1002, ¶¶122–124.)

4. Claim 4 – The image sensor structure as claimed in claim 1, wherein the chip further comprises a ball grid array which is arranged on the second surface of the chip and electrically connected to the conducting channel

The Ma-Wood combination discloses and/or suggests this limitation for the same reasons as discussed regarding claim 3. (Ex. 1002, ¶125; Ex. 1007, ¶0034.)

5. Claim 5 – The image sensor structure as claimed in claim 1, wherein a cavity is formed at the bottom of the holder

Ma discloses this limitation. (Ex. 1002, ¶126.) For instance, Ma discloses a cavity (*e.g.*, cavity 120, 220) is formed at the bottom of the spacing structures (*e.g.*, spacing structure 122 or inner lens assembly 302). (*See*, *e.g.*, Ex. 1007, ¶¶0039–0041, 0051, 0072, FIGs. 1, 3A, 4, 5A, 7–9.)

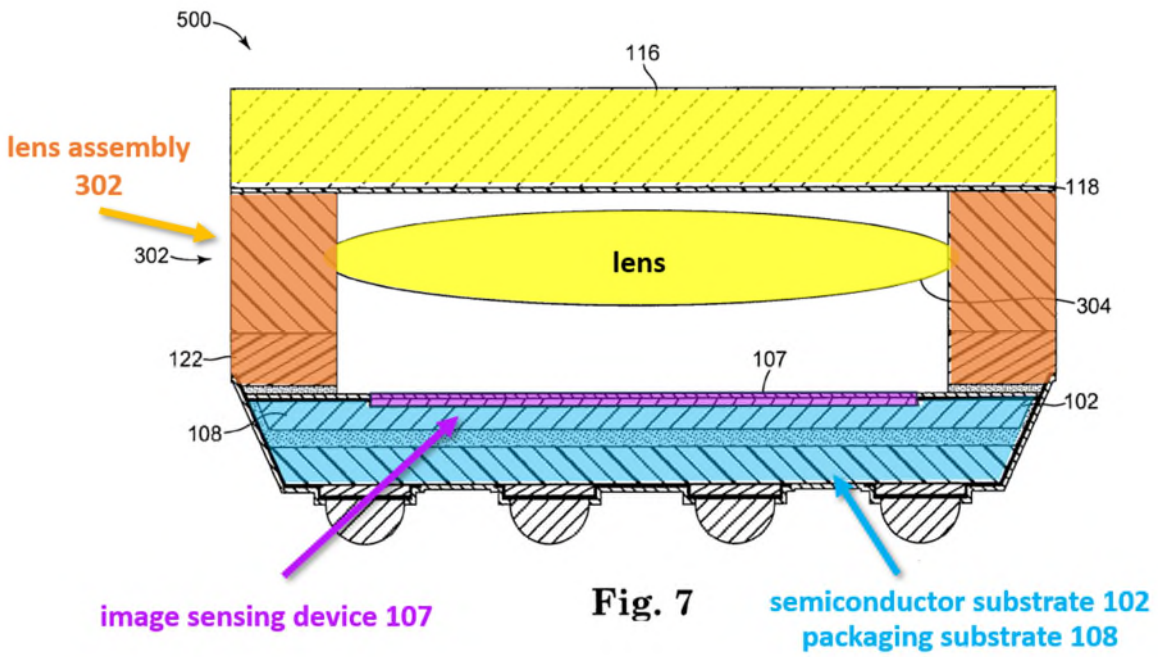

(Ex. 1007, FIG. 7.)

6. Claim 6 – The image sensor structure as claimed in claim 1, wherein the holder is made of a plastic material or a metal material

Ma discloses this limitation. (Ex. 1002, ¶¶127–128.) For instance, Ma discloses that "[i]t will be understood by one skilled in the art that spacing structure 122 can be formed from a variety of moldable and/or machinable materials suitable for wafer level packaging." (Ex. 1007, ¶0043.) In particular, spacing structure 122 may be formed from plastic. (*Id.*) Further, "[s]imilarly to transparent enclosure portion 116," transparent enclosure portion 216, which functions as a lens support, "can be formed from a variety of suitable materials," including high-temperature plastic. (Ex. 1007, ¶0052.) In addition, lens support 305, which is part of lens assembly 302, may be formed from plastic. (Ex. 1007, ¶0058.) And finally, outer

lens assembly 302*o* may also be formed from plastic material. (Ex. 1007, ¶0074.) Accordingly, a POSA would have understood Ma to disclose the lens assemblies may be made from plastic. (Ex. 1002, ¶127.)

Nevertheless, to the extent KTI contends that Ma's disclosure is deficient, it certainly would have been obvious to select a suitable material for the lens assembly. In light of Ma and a POSA's knowledge of suitable materials, a POSA would have been motivated to configure the Ma-Wood camera module to include a lens assembly with an appropriate material, such as plastic. *Sinclair*, 325 U.S. at 335. Furthermore, such a modification would have allowed the lens to be formed with known materials using known technologies/techniques (as demonstrated by Ma) leading to a reasonable expectation of success. (Ex. 1002, ¶128; *see also* Section VII.A.6 (Ground I – claim 6).)

7. Claim 7 – The image sensor structure as claimed in claim 1, wherein the contact surface is combined with the first surface by an adhesive.

Ma discloses this limitation. (Ex. 1002, ¶129.) For instance, Ma discloses that the bottom surface the various lens holder structures can be combined with an adhesive, such as adhesive layers 124, 256, 306. (Ex. 1007, ¶¶0044, 0047, 0055, 0059, 0073.)

8. Claim 9 – The image sensor structure as claimed in claim 1, wherein the lens is a plastic lens.

Ma discloses this limitation. (Ex. 1002, ¶¶130–131.) For instance, Ma teaches that lens 217, 304 and inner lens 304*i* may be made from plastic. (Ex. 1007, ¶¶0052, 0058, 0073, 0074.) Thus, Ma teaches that plastic is a suitable material for the lenses. Further, a POSA would appreciate that Ma discloses the lens may be a plastic lens for any of the embodiments described. (Ex. 1002, ¶130.)

Nevertheless, to the extent KTI contends that Ma's disclosure is deficient, it certainly would have been obvious to select a suitable material for the lens. In light of Ma and a POSA's knowledge of suitable materials, a POSA would have been motivated to configure the Ma-Wood camera module to include one or more lenses with an appropriate material, such as plastic. *Sinclair*, 325 U.S. at 335. Furthermore, such a modification would have allowed the lens to be formed with known materials using known technologies/techniques (as demonstrated by Ma) leading to a reasonable expectation of success. (Ex. 1002, ¶131; *see also* Section VII.A.9 (Ground I – claim 9).)

9. Claim 10 – The image sensor structure as claimed in claim 9, which further comprises an IR cut filter glass which is embedded in the through hole and arranged below the plastic lens.

Ma combination discloses this limitation. (Ex. 1002, ¶¶132–133.) For instance, Ma discloses optical filter film 118 may be a reflective infrared (IR) filter

deposited on transparent enclosure portion 116. (Ex. 1007, ¶0036.) Ma further discloses that transparent enclosure portion 116 may be formed from glass. (Ex. 1007, ¶0035.) And as shown at least in Figures 4, 8, 9, transparent enclosure portion 116 may be embedded in the through-hole of the lens assembly and arranged below a plastic lens, as discussed regarding claim 9.

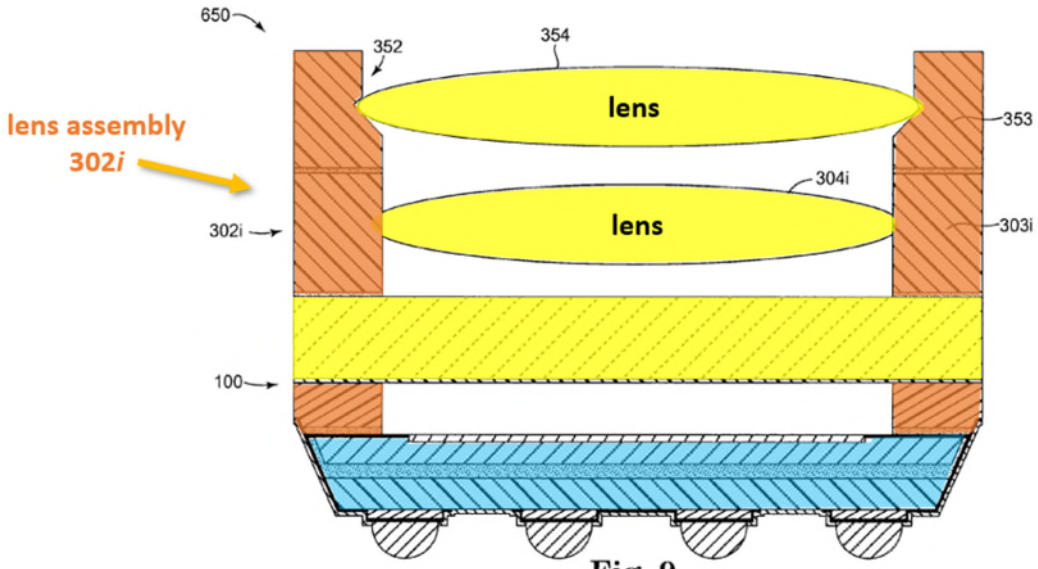

Fig. 9

(Ex. 1007, Fig. 9.)

Nevertheless, to the extent KTI contends that Ma's disclosure is deficient, it certainly would have been obvious to select a suitable material for the IR cut filter. In light of Ma and a POSA's knowledge of suitable materials, a POSA would have been motivated to configure the Ma-Wood camera module to include an IR cut filter made from an appropriate material, such as glass. *Sinclair*, 325 U.S. at 335. Furthermore, such a modification would have allowed the lens to be formed with known materials using known technologies/techniques (as demonstrated by Ma)

leading to a reasonable expectation of success. (Ex. 1002, ¶133; *see also* Section VII.A.10 (Ground I – claim 10).)

10. Claim 11 – The image sensor structure as claimed in claim 1, wherein the lens is a glass lens.

Ma discloses this limitation. (Ex. 1002, ¶¶134–135.) Ma teaches that lens 217 and lens 304 may be made from glass. (Ex. 1007, ¶¶0052, 0058.) Thus, a POSA would appreciate that Ma discloses the lens may be a glass lens for any of the embodiments described. (Ex. 1002, ¶134.)

Nevertheless, to the extent KTI contends that Ma's disclosure is deficient, it certainly would have been obvious to select a suitable material for the lens. In light of Ma and a POSA's knowledge of suitable materials, a POSA would have been motivated to configure the Ma-Wood camera module to include one or more lenses with an appropriate material, such as glass. *Sinclair*, 325 U.S. at 335. Furthermore, such a modification would have allowed the lens to be formed with known materials using known technologies/techniques (as demonstrated by Ma) leading to a reasonable expectation of success. (Ex. 1002, ¶135; *see also* Section VII.A.11 (Ground I – claim 11).)

11. Claim 13 – The image sensor structure as claimed in claim 1, wherein the lens comprises a glass lens and a plastic lens, wherein the glass lens is arranged below the plastic lens

The Ma disclose/suggests this feature. (Ex. 1002, ¶¶136–138.) Ma discloses a dual lens camera modules 600, 650, including one lens 304*i* arranged below a second lens 304*o* or lens 354, respectively. (Ex. 1007, ¶0073–0074, FIGs. 8 and 9.)

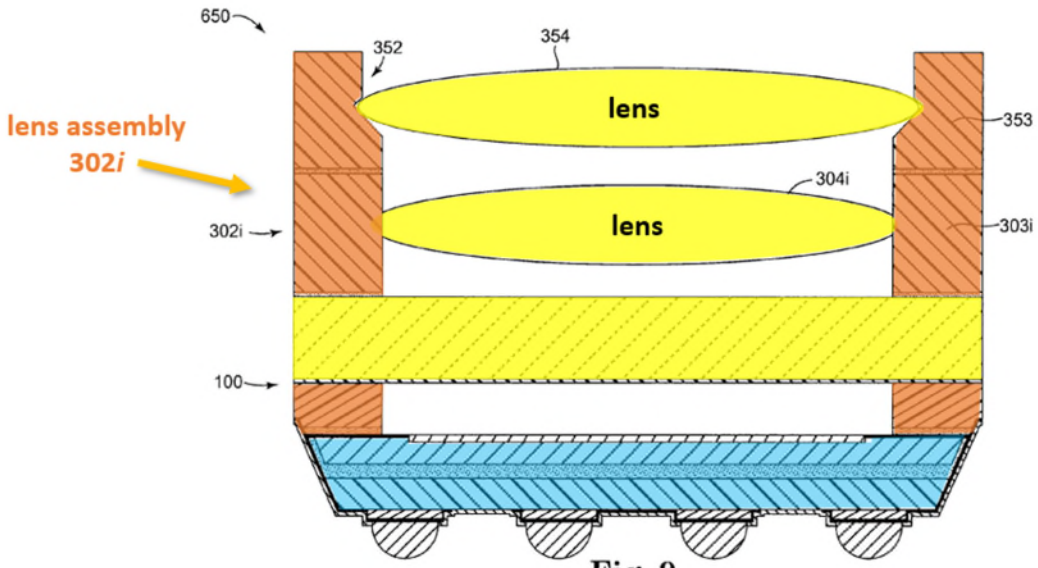

Fig. 9

(Ex. 1007, FIG. 9.)

As discussed above, Ma discloses that both glass and plastic were suitable materials for the lenses. (*See* Sections VII.A.9, VII.A.11, VII.B.8, VII.B.10.) Further, camera modules typically utilized more than one lens to correct for optical aberration inherent in optical lenses, such as chromatic aberrations, astigmatism, field distortion, and others. (Ex. 1002, ¶137.) As discussed above, the choice of materials for such lens systems was routine part of optical design. (*Id.*) Material selection could depend of the desired characteristics of the lens individually (*e.g.*,

lighter weight or higher durability) or as a system (*e.g.*, aberrations created by a lens of one material may be compensated for by a lens of a different material). (*Id.*) For example, consistent with the knowledge of a POSA, Seo teaches that first and second lenses 140 and 180 "may be made of any suitable glass, plastic, or other optical quality material" for use within an image sensor camera module. (Ex. 1006, ¶0024; Ex. 1002, ¶137.) Hence, a POSA would have envisioned suitable two-lens arrangements, such as a glass lens and a plastic lens, including where the glass lens is arranged below the plastic lens. (*Id.*)

In light of Ma and a POSA's knowledge of suitable materials, a POSA would have been motivated to configure the Ma-Wood camera module to include two lenses with an appropriate material, such as glass and plastic, including herein the glass lens is arranged below the plastic lens. *Sinclair*, 325 U.S. at 335. Furthermore, such a modification would have allowed the lens to be formed with known materials using known technologies/techniques (as demonstrated by Ma and Seo) leading to a reasonable expectation of success. (Ex. 1002, ¶¶136–138.)

12. Claim 15 – The image sensor structure as claimed in claim 13, which further comprises an IR cut filter glass which is embedded in the through hole and arranged below the plastic lens

The Ma discloses/suggests this limitation for the same reasons as discussed regarding claims 9–11 and 13. (Ex. 1002, ¶¶139–140.)

VIII. SECONDARY CONSIDERATIONS

Patent Owner bears the burden of proof in establishing objective indicia of nonobviousness, but has not come forward with any such evidence. To the extent Patent Owner offers any purported evidence of nonobviousness in this proceeding, consideration should be delayed until Petitioner has had an opportunity to respond to it.

IX. DISCRETIONARY DENIAL IS NOT APPROPRIATE

As explained below, the six factors set out in *Fintiv* do not justify denying institution. *See Apple Inc. v. Fintiv, Inc.*, IPR2020-00019, Paper 11 (P.T.A.B. Mar. 20, 2020) (precedential).

As explained below, the six factors set out in *Fintiv* weigh in favor of institution. *See Apple Inc. v. Fintiv, Inc.*, IPR2020-00019, Paper 11 (P.T.A.B. Mar. 20, 2020) (precedential).

The first factor (stay) is at best neutral because Petitioner has not yet moved to stay the parallel district court case and the PTAB does speculate on how the district court would rule should a stay be requested. *See, e.g.*, *Hulu LLC v. SITO Mobile R&D IP, LLC*, IPR2021-00298, Paper 11 at 10-11 (P.T.A.B. May 19, 2021).

The second factor (proximity of trial dates) is also neutral. While jury selection is currently set for April 2025, "an early trial date" is "non-dispositive" and simply means that "the decision whether to institute will likely implicate other

factors," which, as explained, favor institution. *Fintiv*, IPR2020-00019, Paper 11 at 5, 9; *see also Intuitive Surgical, Inc. v. Ethicon LLC*, IPR2018-01703, Paper 7 at 12 (P.T.A.B. Feb. 19, 2019) (recognizing that, even if a trial will come before a final decision, institution is appropriate to "give[] the district court the opportunity, at its discretion, to conserve judicial resources by staying the litigation until the review is complete," which helps "satisfy[] the AIA's objective"); *cf. Unilioc USA, Inc. v. RingCentral, Inc.*, No. 2-17-cv-00354-JRG (E.D. Tex. Feb. 12, 2018), at *1 (observing that staying the case pending IPR will "streamline the scope of th[e] case to an appreciable extent" regardless of the IPR outcome); *NetNut Ltd. v. Bright Data Ltd.*, IPR2021-01492, Paper 12 at 9–16 (P.T.A.B. Mar. 21, 2022) (granting institution even when the co-pending trial date was scheduled six months before the final written decision deadline).

The third factor (investment in parallel proceedings) weighs in favor of institution. The fact discovery is in its early states and the Parties' have only limited investment to date. No depositions have been taken. Fact discovery has not ended. Expert discovery is not yet open. The majority of work still remains ahead. (Ex. 1033.)

Petitioner's reasonable diligence in pursuing this petition prior to receiving the final infringement contentions weighs in favor of institution third *Fintiv* factor. *Facebook, Inc. v. USC IP P'ship, L.P.*, IPR2021-00033, Paper 13 at 13 (P.T.A.B.

April 30, 2021) (finding it was reasonable for Petitioner to wait to file the Petition until shortly after receiving infringement contentions). Petitioner has not received infringement contentions for nearly all of the more than 70 accused products. Moreover, the most cost-intensive period in the case will occur after the Board's institution decision, including dispositive motions and trial. *See Precision Planting, LLC. v. Deere & Co.*, IPR2019-01044, Paper 17 at 14-15 (P.T.A.B. Dec. 2, 2019) (where the district court has not issued a claim construction ruling, fact discovery and expert discovery are not closed, and dispositive motion briefing has not yet occurred, that weighs against finding that case is at "an advanced stage"); *Abbott Vascular, Inc. v. FlexStent, LLC*, IPR2019-00882, Paper 11 at 30 (P.T.A.B. Oct. 7, 2019) (same). Because the investment in the trial has been relatively small and Petitioner acted diligently, this factor favors institution. *See, e.g.*, *Hulu*, Paper 11 at 13.

The fourth factor (overlap) also weighs in favor of institution. Petitioner stipulates that it will not maintain the same grounds of invalidity or grounds based on the same prior art in the parallel WDTX case if the Board institutes review as requested. Thus, there will be no overlap. This alleviates any concerns about potentially conflicting outcomes. In the parallel WDTX case, Reolink Digital's preliminary invalidity contentions do not contain any ground presented in this petition nor rely on the references from either ground. Thus, there is currently no

overlap between Reolink Digital's invalidity contentions in the parallel district court proceeding and the grounds presented here.

Regarding the fifth factor, the Board should give no weight to the fact that Petitioner and PO are the same parties as in district court. *See Weatherford U.S., L.P., v. Enventure Global Tech., Inc.*, Paper 16 at 11-13 (P.T.A.B. April 14, 2021).

And even if *Fintiv* factors 1–5 had favored a discretionary denial, the sixth factor (other circumstances) weighs in favor of institution, given the compelling merits here. *Commscope Technologies LLC v. Dali Wireless, Inc.*, IPR2022-01242, Paper 23 (P.T.A.B. Feb. 27, 2023); *see also* Section VIII. There is also a significant public interest against "leaving bad patents enforceable," and institution will further that interest. *Thryv, Inc v. Click-To-Call Techs., LP*, 140 S. Ct. 1367, 1374 (2020); *see also OpenSky Indus., LLC v. VLSI Tech. LLC*, IPR2021-01064, Paper 108 at 4–6 (P.T.A.B. Oct. 17, 2022). To Petitioners knowledge, KTI does not manufacture any commercial products and have no market presence. And despite the high likelihood of unpatentability of the challenged claims as demonstrated here, *KTI has asserted the '602 patent more than 17 times against diverse commercial entities and accused an equally diverse range of products of infringement*. All of those suits have settled (except for the litigation against Petitioner) and allowed KTI to continue to assert the '602 patent undeterred. Regardless of the other factors, the

circumstances here provide compelling motivation to institute review of patent claims of highly questionable validity.

X. CONCLUSION

For the foregoing reasons, Petitioner respectfully requests review and cancellation of claims 1–15 of the '602 patent.

Dated: July 3, 2024

Respectfully submitted,

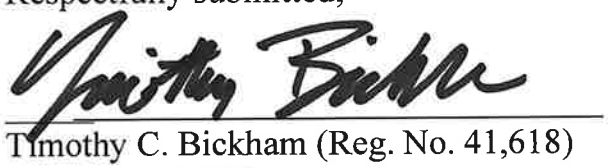

Timothy C. Bickham (Reg. No. 41,618)
Dentons US LLP
1900 K Street NW
Washington, DC 20006
(202) 496-7500 (telephone)
(202) 496-7756 (facsimile)
Timothy.bickham@dentons.com

Lead counsel for Petitioner

CERTIFICATE OF COMPLIANCE

The undersigned certifies that the foregoing Petition for Inter Partes Review contains 12001 words, excluding those portions identified in 37 C.F.R. § 42.24(a), as counted by the word-processing software used to prepare this paper.

Dated: July 3, 2024

By: /Timothy C. Bickham/
Timothy C. Bickham, Lead Counsel
Reg. No. 41,618

CERTIFICATE OF SERVICE

Pursuant to 37 C.F.R. § §42.6(e) and 42.105(a), the undersigned certifies that on July 3, 2024, a copy of the foregoing Petition for *Inter Partes* Review of U.S. Patent No. 8,004,602, the associated power of attorney, and Exhibits 1001-1011, 1030-1033 were served by FedEx Priority Overnight on the correspondence address of record indicated in the Patent Office's public Patent Center system for U.S. Patent No. 8,004,602:

Marquez Intellectual Property Law Office PLLC
Juan Carlos A. Marquez
1629 K Street, N.W. Suite 300
Washington DC 20006

and also

Kheyfits Belensky LLP
Dmitry Kheyfits
12600 Hill Country Blvd
Suite R-275
Austin, TX 78738

Dated July 3, 2024

By:/s/Cheryl Bednarz
Cheryl Bednarz
Senior Paralegal

Dentons, LLP