UNITED STATES PATENT AND TRADEMARK OFFICE

BEFORE THE PATENT TRIAL AND APPEAL BOARD

IMPERATIVE CARE, INC.,
Petitioner,

v.

INARI MEDICAL, INC.,
Patent Owner.

Case IPR2024-01157
Patent No. 11,697,011

DECLARATION OF TROY L. THORNTON
IN SUPPORT OF PETITION FOR *INTER PARTES* REVIEW OF
U.S. PATENT NO. 11,697,011

TABLE OF CONTENTS

Page No.

I. INTRODUCTION 1

A. Engagement 1

B. Experience and Qualifications 2

C. Topics of Opinions 4

D. Materials Considered 5

II. APPLICABLE LEGAL STANDARDS 5

A. Claim Construction 6

B. Anticipation 7

C. Obviousness 7

D. Person of Ordinary Skill in the Art 11

III. THE ’011 PATENT 12

A. Summary of the ’011 Patent 12

B. The Challenged Claims 20

C. Prosecution History 21

IV. CLAIM CONSTRUCTION 22

V. SUMMARY OF IPR GROUNDS 26

VI. GROUNDS 1-4: CLAIMS 1-9 ANTICIPATED BY SCHAFFER OR OBVIOUS OVER SCHAFFER ALONE OR IN COMBINATION WITH HARTLEY OR ELLER 27

A. Claim 1 33

TABLE OF CONTENTS
(*cont'd*)

Page No.

1. Preamble 33

2. Tubular Member 34

3. Constricting Mechanism 36

4. Biasing System 76

B. Claim 2 78

C. Claim 3 79

1. Schaffer 79

2. Hartley 81

3. Eller 83

D. Claim 4 85

E. Claim 5 87

1. Schaffer 88

2. Schaffer and Hartley 94

3. Schaffer and Eller 96

F. Claim 6 98

G. Claim 7 104

H. Claim 8 105

I. Claim 9 106

TABLE OF CONTENTS
(*cont'd*)

Page No.

VII. GROUND 5: CLAIMS 1-3, 5-6, 9 OBVIOUS OVER HARTLEY IN COMBINATION WITH ELLER 107

A. Claim 1 109

1. Preamble 109

2. Tubular Member 109

3. Constricting Mechanism 111

4. Biasing System 118

B. Claim 2 123

C. Claim 3 123

D. Claim 5 124

E. Claim 6 126

F. Claim 9 130

VIII. SECONDARY CONSIDERATIONS 131

IX. CONCLUSION 132

TABLE OF EXHIBITS

Exhibit No.	Description
1001	U.S. Patent No. 11,697,011 ("the '011 patent")
1002	'011 Patent Prosecution History Excerpt
1003	Expert Declaration of Troy Thornton
1004	Resume of Troy Thornton
1005	U.S. Patent Publication US 2003/0225379 A1 to Schaffer et al. ("Schaffer")
1006	U.S. Patent Publication US 2003/0116731 A1 to Hartley ("Hartley")
1007	U.S. Patent No. 9,980,813 B1 to Eller ("Eller")
1008	Drawings Submitted During Prosecution of U.S. Patent Application No. 10/371,190 dated June 18, 2003
1009	U.S. Patent No. 5,429,616 to Schaffer ("Schaffer '616")
1010	U.S. Patent Publication US 2011/0144592 A1 to Wong et al. ("Wong")
1011	U.S. Patent Publication US 2015/0173782 A1 to Garrison et al. ("Garrison")

I, Troy L. Thornton, do hereby declare:

I. INTRODUCTION

A. Engagement

1. I have been retained on behalf of Imperative Care, Inc. ("Imperative" or "Petitioner") to provide my opinion regarding the patentability of Claims 1-9 of U.S. Patent No. 11,697,011 ("the '011 patent"). For the reasons discussed herein, I have concluded that Claims 1-9 of the '011 patent are unpatentable because the prior art references anticipate the claims or render them obvious.

2. I understand that this Declaration supports Imperative's Petition for the above-captioned *inter partes* review ("IPR") of the '011 patent.

3. I reserve the right to supplement, change, clarify, or modify my opinions should additional information and/or documentation become available to me. I also reserve the right to submit a rebuttal declaration in response to any expert declaration(s) submitted on behalf of the owner of the '011 patent, Inari Medical, Inc. ("Inari" or "Patent Owner").

4. I am being compensated at my customary hourly rate for my work in this matter and I am being reimbursed at cost for my expenses. My compensation in no way depends upon the substance of my opinions or the outcome of this proceeding. I have no financial interest in any of the parties to this proceeding.

B. Experience and Qualifications

5. My experience and qualifications are summarized in my *curriculum vitae*, a copy of which is included as Exhibit 1004.

6. I received a Bachelor of Science degree in Engineering Science, with Biomedical Engineering emphasis, in 1985 from Iowa State University. Since then, I have worked as an engineer, executive, and consultant in the medical device industry, particularly in the cardiovascular field. My work has included designing and developing numerous medical devices in the cardiovascular field, including catheters, percutaneous heart valve repair systems, stent grafts, and blood pumps.

7. Since 2015 I have worked as a consultant for various medical device companies, assisting the companies with early design, development, problem-solving, and intellectual property related matters.

8. Before my current consulting business, I was a Program Director for Abbott Ventures from June 2012 through December 2014. My work at Abbott Ventures focused on technical assessment and analysis of potential investments in both cardiovascular and non-cardiovascular medical device technologies.

9. In June 2000, I assumed the position of Director of Research and Development at Evalve, Inc., and in 2001 was promoted to Vice President of Research & Development. I served in that position until June 2012. While at

Evalve, I was responsible for managing all aspects of research and development for a percutaneous mitral valve repair system known as the MitraClip. The MitraClip system included three complex catheters and a permanent mechanical implant, and I led the research and development for all aspects of the product. The MitraClip product received FDA approval in 2013 and is currently available in over 30 countries.

10. From June 1995 through May 2000, I was a Project Manager at Prograft Medical Inc. While at Prograft, I was responsible for the development and commercial launch of a bifurcated, modular stent-graft used in the treatment of abdominal aortic aneurysms known as Excluder. I managed the overall project from its inception through initial commercialization, which involved designing and building initial protypes, developing physician training materials, assisting with regulatory filings, providing physician training, and supporting physicians during five live case transmissions endovascular symposia.

11. From August 1989 through May 1995, I worked as a Project Group Leader and Senior Engineer for Advanced Cardiovascular Systems at Guidant. My work at Guidant focused on the design and development of percutaneous transluminal coronary angioplasty (PTCA) and perfusion catheters. I was responsible for catheter design, material selection, process development, performance testing, physician evaluation, and animal studies for an elliptical

coronary PTCA catheter that ultimately became the top-selling PTCA in the United States.

12. From 1987 to 1989, I worked as a Manufacturing Engineer at Symbion, Inc. My work at Symbion included developing and improving manufacturing processes for class III medical devices, including a centrifugal blood pump.

13. From 1985 to 1987 I worked as a Process Engineer at Becton-Dickenson, Inc. My work at Becton-Dickenson included validating and implementing manufacturing processes for a thermodilution catheter and conducting cost saving and process improvements for central venous catheter products.

14. In summary, I have more than 35 years of experience in the cardiovascular medical device field, including significant experience designing, developing, testing, and manufacturing catheters and catheter systems for minimally invasive cardiovascular procedures. I am therefore very familiar with the concepts of catheters, catheter systems, and hemostasis valves, and I believe I am well placed to comment on the understanding of a person of ordinary skill in the art in the context of the ’011 patent.

C. <u>Topics of Opinions</u>

15. I offer opinions in this Declaration on the following general topics:

- The subject matter described and claimed in the ’011 patent;
- The level of ordinary skill in the art pertaining to the ’011 patent;
- The teachings of the prior art; and
- Whether Claims 1-9 of the ’011 patent would have been obvious to a person of ordinary skill in the art at the time of the alleged invention, in view of the prior art.

D. Materials Considered

16. In preparing this Declaration, I have considered the materials referenced in this Declaration and identified in the attached list of exhibits.

17. I have also relied on my education, training, and experience, and my knowledge of pertinent literature in the field of the ’011 patent.

II. APPLICABLE LEGAL STANDARDS

18. I am a biomedical engineer by training and profession. The opinions I am expressing in this Declaration involve the application of my education, training, and technical knowledge and experience to the evaluation of certain prior art with respect to the ’011 patent.

19. Although I have had some prior exposure to patent matters, I am not an expert in patent law. Therefore, I have been advised of certain principles of patent law applicable in this matter, which I have used in arriving at my

determinations and opinions. The paragraphs below express my understanding of how I must apply these principles in forming my opinions.

A. Claim Construction

20. I understand that the first step in assessing the patentability of a patent claim is to understand the meaning of the words used in the claims. I understand this process of defining, or construing, the claim terms is generally referred to as claim construction. Generally speaking, I understand that I am to apply the ordinary and customary (i.e., plain and ordinary) meaning of each claim term as would have been understood by a person of ordinary skill in the art at the time of the invention, consistent with the specification and prosecution history.

21. I also understand that the patentee may act as its own lexicographer such that they may redefine a claim term to have a meaning that is different from the plain and ordinary meaning. I understand that when a patentee has acted as its own lexicographer, the patentee's definition should be applied instead of the plain and ordinary meaning that the term would have absent the redefinition. I understand that the patentee can redefine a claim term in either the specification or in statements made to the Patent Office during prosecution of the patent. I understand that the patentee's redefinition of a term does not need to be provided in express definitional format, but rather that the redefinition can be implied

through the disclosure of the specification or the patentee's statements during prosecution.

B. Anticipation

22. I understand that a patent claim is unpatentable if it is "anticipated" by a piece of prior art. I have been instructed that a claim is "anticipated" if a prior art reference describes, either expressly or inherently, each limitation of the claim. I understand that this description must be recognizable to a person of ordinary skill in the art at the time of the alleged invention (in this case, September 2017).

23. I understand that an element is "inherent in," and therefore taught by, the prior art, if it necessarily flows from the explicit disclosure of the prior art. The fact that a certain result or characteristic may be present in the prior art is not sufficient to establish inherency. However, if the result or characteristic is necessarily present based upon the explicit disclosure in the prior art, it is inherent in the prior art and is therefore disclosed.

C. Obviousness

24. I understand that a patent claim may also be unpatentable if it is rendered "obvious" by the prior art. I have been instructed that a claim is "obvious" if the claimed subject matter as a whole would have been obvious to a person of ordinary skill in the art at the time of the alleged invention. I understand

that in considering obviousness I must consider the scope and content of the prior art, the differences between the claimed subject matter and the prior art, and the level of ordinary skill in the art at the time of the invention.

25. In determining the scope and content of the prior art, I understand that a reference is considered analogous (i.e., appropriate) prior art if it falls within the field of the inventor's endeavor. In addition, a reference is analogous prior art if it is reasonably pertinent to the particular problem with which the inventor was involved. A reference is reasonably pertinent if it logically would have commended itself to an inventor's attention in considering the problem. If a reference relates to the same problem as the claimed invention, that supports use of the reference as prior art in an obviousness analysis.

26. The prior art references applied in this Declaration are analogous art that is usable in an obviousness combination. The references are from the same field as the '011 patent, e.g., hemostasis valves for use during intravascular procedures. The references are also pertinent to the problem the inventor was focused on, e.g., sealing a catheter during intravascular procedures to minimize blood leaks.

27. To assess the differences between prior art and the claimed subject matter, I have been instructed that the law requires the claimed invention to be considered as a whole. This "as a whole" assessment requires showing that one of

ordinary skill in the art at the time of invention, confronted by the same problems as the inventor and with no knowledge of the claimed invention, would have selected the elements from the prior art and combined them in the claimed manner.

28. I am also informed that the law recognizes several rationales for combining references or modifying a reference to show obviousness of claimed subject matter. Some of these rationales include:

- combining prior art elements according to known methods to yield predictable results;
- simple substitution of one known element for another to obtain predictable results;
- a predictable use of prior art elements according to their established functions;
- applying a known technique to a known device (method or product) ready for improvement to yield predictable results;
- choosing from a finite number of identified, predictable solutions, with a reasonable expectation of success; and
- some teaching, suggestion, or motivation in the prior art that would have led one of ordinary skill to modify the prior art

reference or to combine prior art reference teachings to arrive at the claimed invention.

29. A prior art reference may also suggest a limitation of the claims. In that case, even if the prior art reference does not explicitly or inherently disclose the limitation, the motivation to modify the prior art reference to include the limitation may exist within the prior art reference itself. Thus, the limitation would have been obvious over that prior art reference alone. This is the case if a person of ordinary skill in the art would have had a simple design choice or a finite number of identified, predictable solutions, for example, and if the modification furthers the goals of the prior art reference.

30. I have also been informed that the obviousness analysis must be performed from the perspective of a person of ordinary skill in the art at the time of the alleged invention. This is to avoid using impermissible hindsight in the analysis. The claims of the patent must not be used to provide a road map for obviousness; instead, the claims would have been obvious if a person of ordinary skill in the art would have been motivated to combine the teachings of the prior art to arrive at the claimed invention and had a reasonable expectation of success in doing so.

31. An obviousness analysis also must consider whether there are additional factors that would indicate that the invention would not have been

obvious. These factors include whether there was: (i) a long-felt need in the industry; (ii) any unexpected results; (iii) skepticism of the invention; (iv) a teaching away from the invention; (v) commercial success; (vi) praise by others for the invention; and (vii) copying by others. I am not aware of any evidence under these factors that would suggest that Claims 1-9 of the ’011 patent would have been non-obvious, as further explained in Section § VIII (Heading: “Secondary Considerations”) below.

D. <u>Person of Ordinary Skill in the Art</u>

32. It is my understanding that when interpreting the claims of the ’011 patent, I must do so based on the perspective of a person of ordinary skill in the art at the relevant priority date. I have been instructed to assume for the purposes of my opinions that the relevant priority date of the ’011 patent is September 6, 2017. I have been informed that all of the references relied upon in this Declaration qualify as prior art under that priority date.

33. I am informed that the person of ordinary skill in the art is a hypothetical person who is presumed to have known the relevant art at the time of the invention. This is a person of ordinary creativity, not an automaton.

34. I am informed that in determining the level of ordinary skill in the art, several factors are considered. Those factors may include: (i) the type of problems encountered in the art; (ii) prior art solutions to those problems; (iii) the

rapidity with which innovations are made; (iv) the sophistication of the technology; and (v) the educational level of active workers in the field. A person of ordinary skill in the art must have the capability of understanding the scientific and engineering principles applicable to the pertinent art.

35. Based on my review of the specification and claims of the ’011 patent, it is my opinion that a person of ordinary skill in the art would have had an undergraduate degree in mechanical engineering or a related engineering discipline and 2-4 years of product design or engineering experience.

36. I can make this assessment because during my career, I had experience assigning engineers to work on mechanical design projects, including projects to design hemostasis valves or incorporate them into catheter-based projects. For such projects, I would assign an engineer with the experience described above.

III. THE ’011 PATENT

A. Summary of the ’011 Patent

37. The ’011 patent describes embodiments of a hemostasis valve (also referred to in the ’011 patent as a “garrote” valve) for use with a catheter during minimally invasive intravascular procedures. Ex. 1001 (’011 patent) 1:21-57. The valve creates a seal that prevents blood from passing through the valve, including when a tool is passed through the valve. *Id.* at 5:51-54. The valve prevents blood

from leaking through the catheter during the intravascular procedure, and also prevents air or other contaminants from entering the patient's vasculature. *Id.* at 1:38-41.

38. As illustrated in Figure 2 of the '011 patent below, the stasis valve described in the '011 patent includes a "housing 128" that defines a "interior channel 130," and a collapsible "elongate member 132" that extends through the housing:

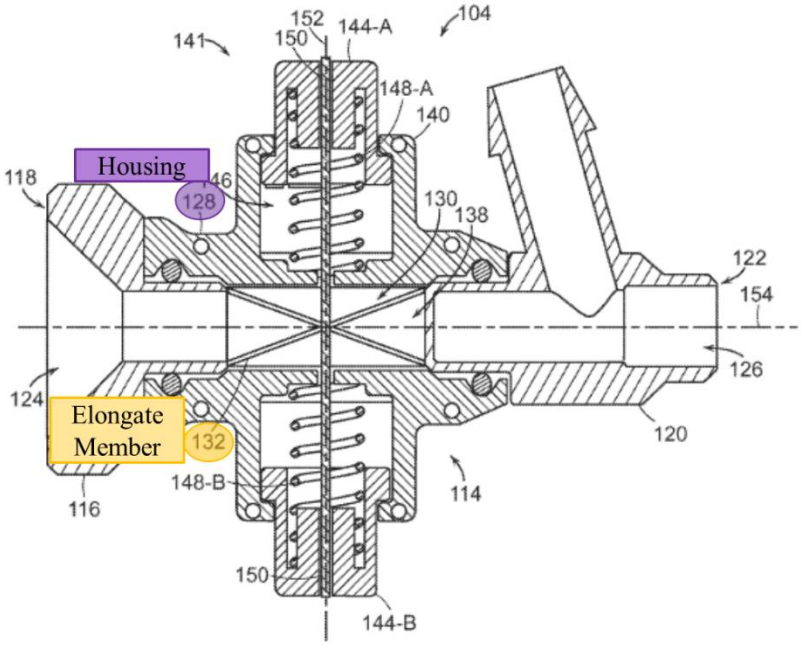

FIG. 2

Id. at 6:63-7:27, Fig. 2. The '011 patent explains that the elongate member 132 has a "thin-walled compliant tubular structure," which helps facilitate "the uniform collapse of the elongate member 132 and the sealing of the elongate member 132." *Id.* at 7:13-19.

39. The ’011 patent describes that the sealing of the elongate member is accomplished by a “constricting mechanism,” which can “collapse and seal the elongate member 132 via compression and/or constriction, and specifically via constriction with at least one filament 150.” *Id.* at 8:1-4. The ’011 patent explains that the filament “can extend at least partially around the elongate member.” *Id.* at 8:6-8. The constricting mechanism also includes an actuator, which the ’011 patent states “can be a manual actuator such as one or several buttons 144”:

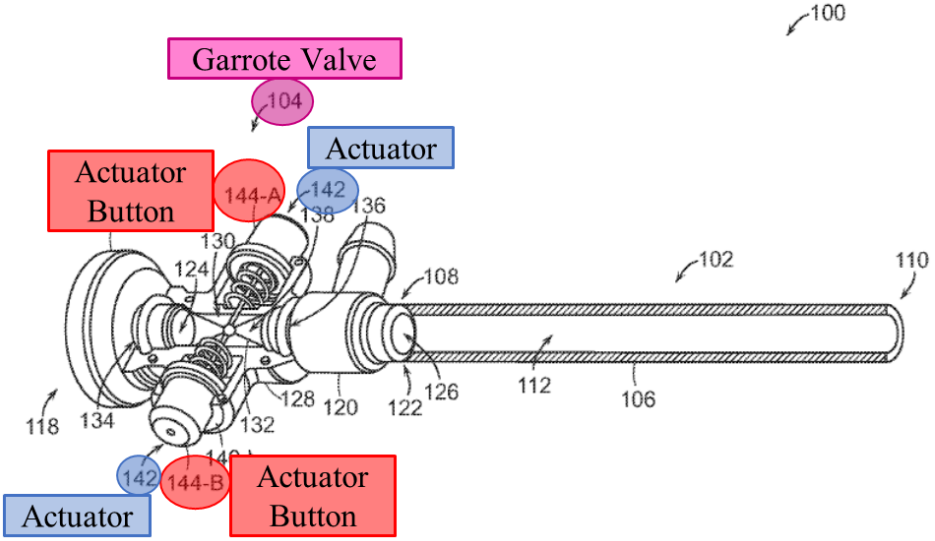

FIG. 1

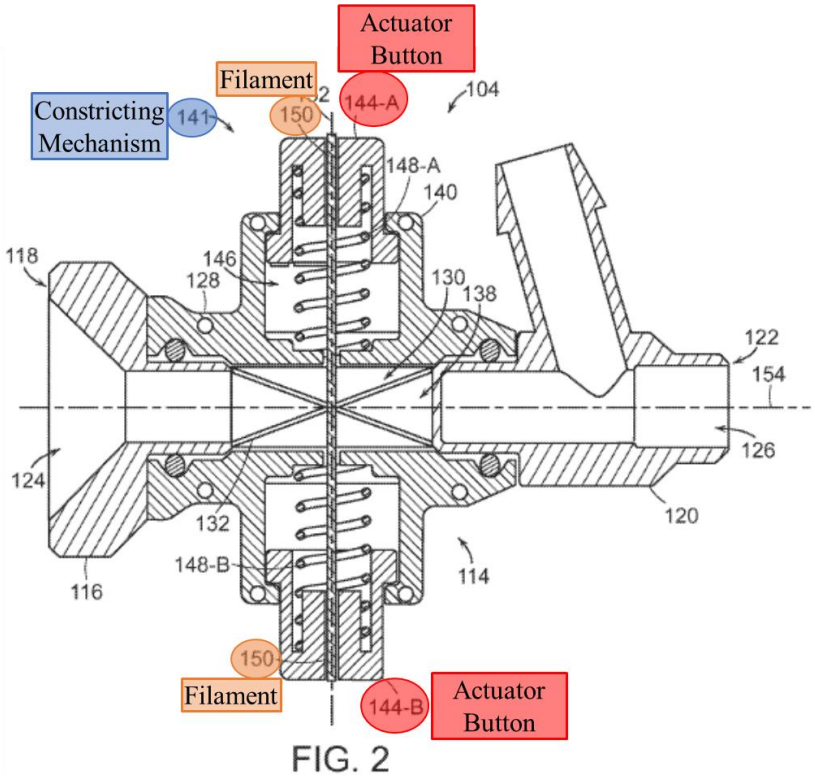

Id. at 8:4-6, Figs. 1-2. The filament is "coupled to the actuator 142 such that the filament 150 selectively constricts, collapses, and/or seals the elongate member 132 … based on the movement and/or position of the actuator 142." *Id.*, at 9:21-25.

40. The '011 patent also explains that the valve can include a "bias feature," such a spring, which biases the valve to either the closed (referred to as first) or open (referred to as second) position when no outside forces are being applied to the actuator. *Id.* at 8:35-53. Figure 2 shows the valve biased toward the first, closed position:

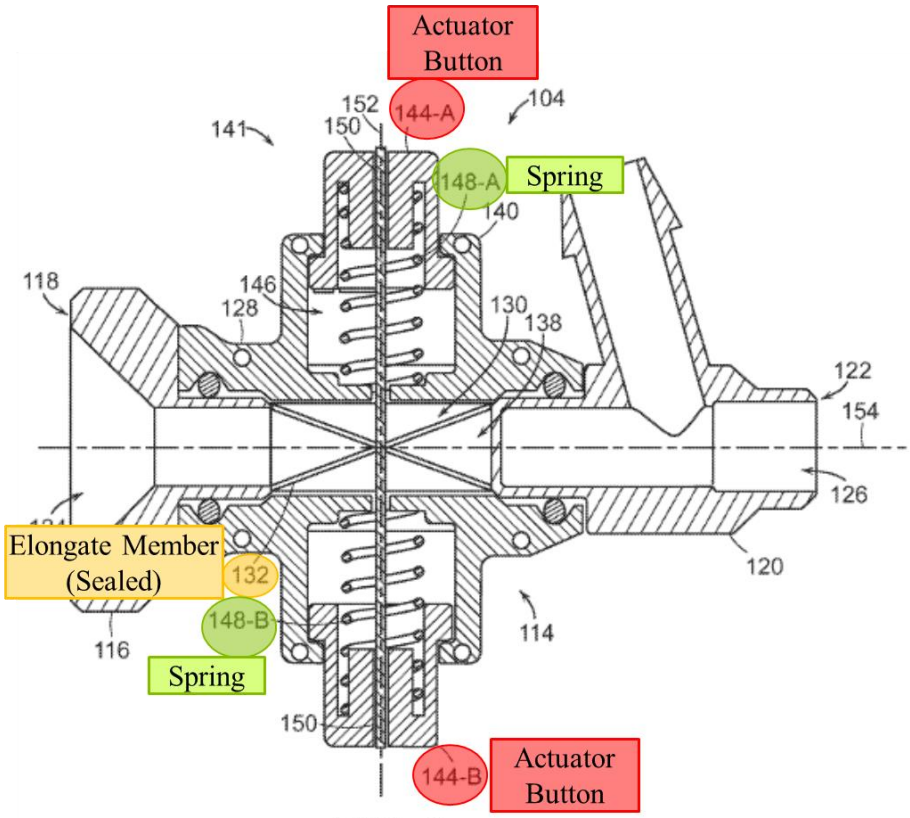

FIG. 2

Id. at 8:35-53, Fig. 2. The '011 patent explains that when the actuator buttons are depressed by an outside force, the tension on the filament is loosened "thereby allowing the expansion of the elongate member 132 and the unsealing of the central lumen 138 of the elongate member 132." *Id.* at 9:51-59. Figure 3 below depicts the valve in the second, opened position when the actuator buttons are depressed:

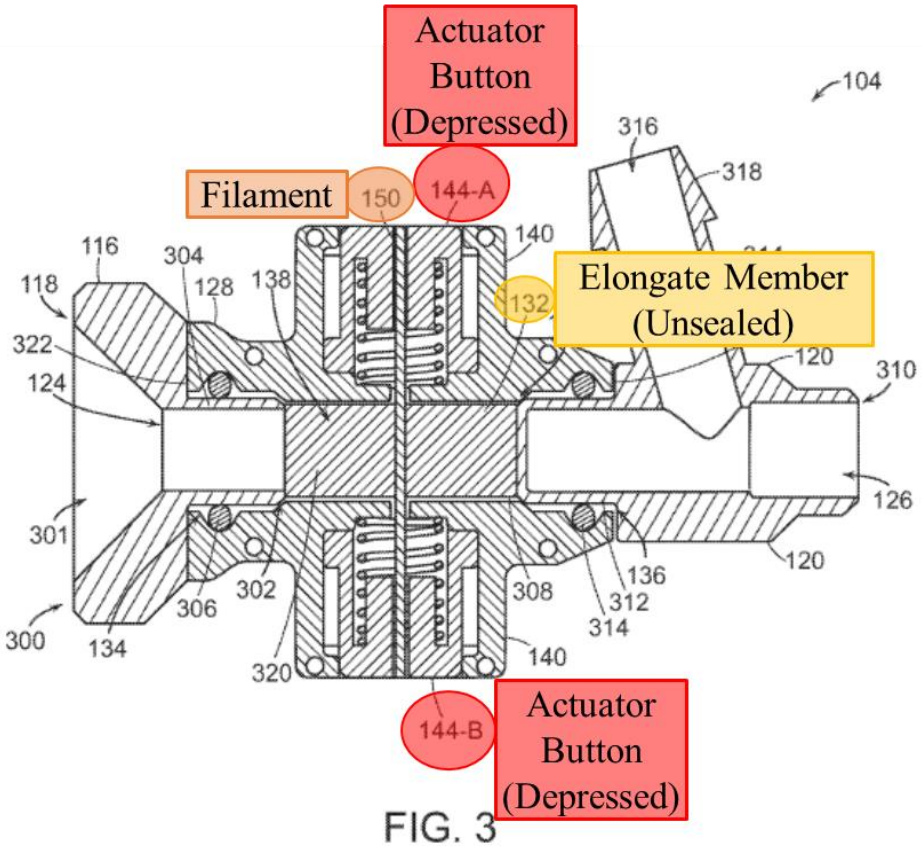

FIG. 3

Id. at 5:27-28, Fig. 3.

41. The ’011 patent explains that its constricting mechanism, including the filament, can constrict the elongate member around a tool that is inserted through the central lumen of the elongate member to “create a seal between the elongate member 132 and the tool.” *Id.* at 11:67-12:27. Figure 4 below depicts the valve in the first, closed position, with a tool 400 inserted through the central lumen of the elongate member:

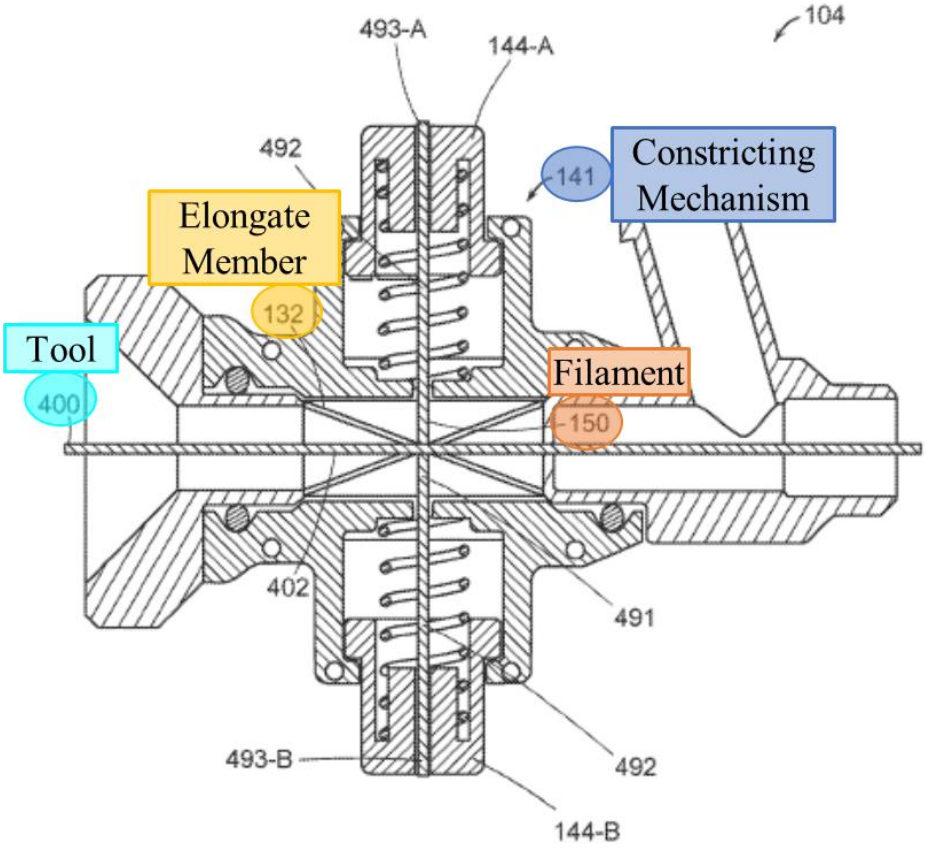

FIG. 4

Id. at 5:29-31, Fig. 4.

42. The ’011 patent discloses that the “filament 150 can be arranged in a variety of configurations” including a single loop 604 that can extend around the elongate member 132 as shown in Figure 6, multiple loops that can extend around the elongate member as shown in Figure 7, or a “U-shaped section between the two ends of the filament 150” (i.e., a bight) that can extend around the elongate member as shown in Figures 8 and 9:

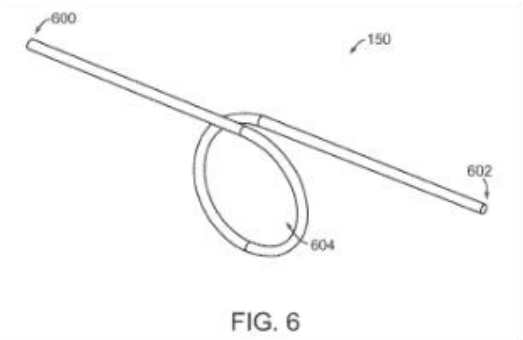

FIG. 6

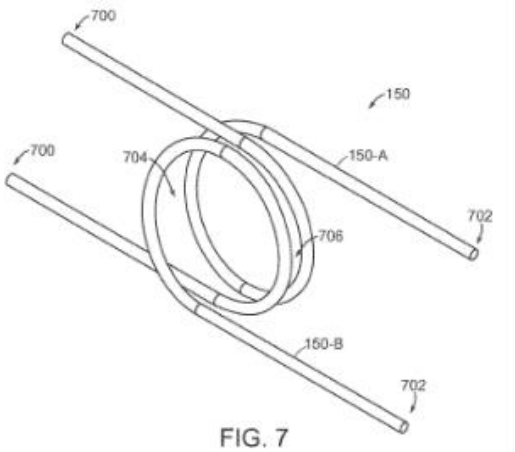

FIG. 7

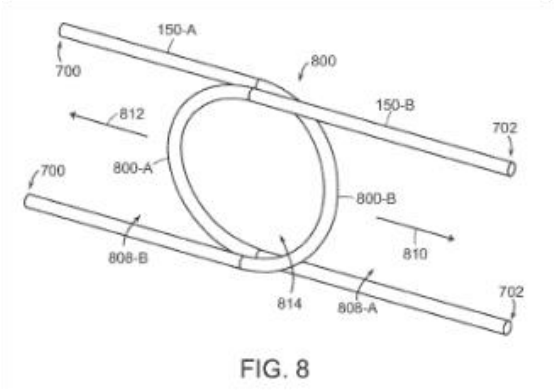

FIG. 8

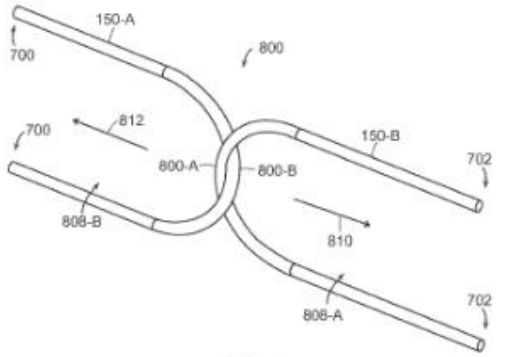

FIG. 9

Id. at 13:29-14:46, Figs. 6-9. The ’011 patent also discloses that the filament can be formed from a range of materials “including, for example, a polymer, a synthetic, and/or a metal.” *Id.* at 9:10-13. The filament can also “comprise a single strand such as, for example, a monofilament” or it “can comprise a plurality of strands that can be, for example, twisted, woven, grouped, and/or fused to form the filament.” *Id.* at 9:13-18. Accordingly, “the filament 150 can comprise one or several threads, lines, cords, rope, ribbon, flat wire, sheet, or tape.” *Id.* at 9:18-20. Additionally, “in some embodiments, each of the first end 700 and the second end

702 of one or more of the multiple filaments 150 can be coupled to different buttons 144":

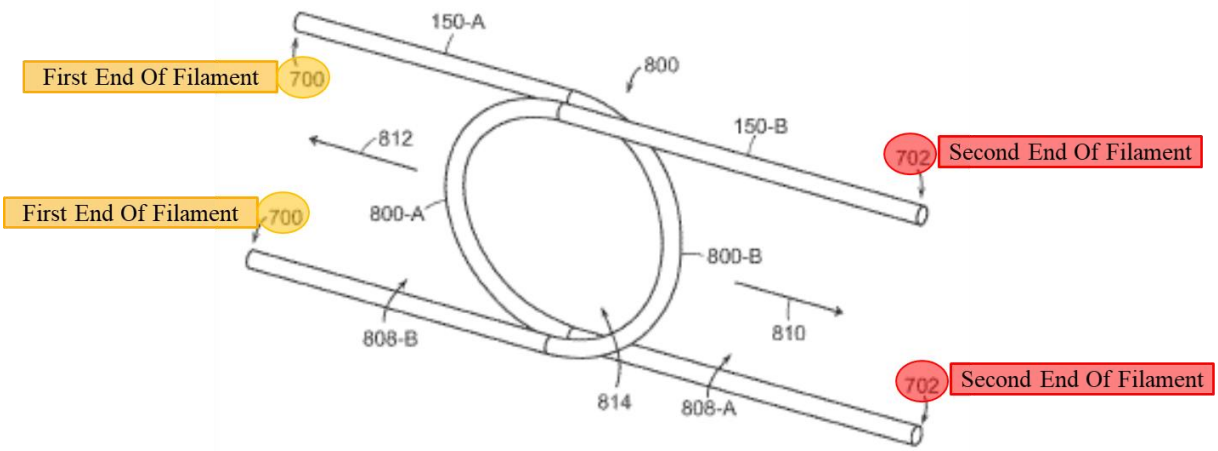

FIG. 8

Id. at 13:20-23, Fig. 8.

B. <u>The Challenged Claims</u>

43. The challenged claims include Claims 1-9 of the '011 patent. Claim 1 is the only independent claim.

44. Claim 1 is illustrative (but not representative) of some of the limitations in the challenged claims. Claim 1 states:

> 1. A valve, comprising:
>
> a tubular member defining a lumen configured to slidably receive a catheter;
>
> a constricting mechanism including at least one filament and an actuator coupled to the filament, the filament comprising a first portion extending around at least a portion of the tubular member and a second portion having a first end extending from the first portion in one direction and a second end extending from the first portion in another direction, and the actuator comprises a first member coupled to the first end of the

filament and a second member coupled to the second end of the filament, wherein the first member and the second member of the actuator are moveable between (a) a first position wherein the filament circumferentially constricts the lumen to create a seal and (b) a second position wherein the filament is moved to at least partially open the lumen; and

a biasing system configured to bias the first member and the second member to the first position.

Ex. 1001 ('011 patent) at Claim 1.

C. <u>Prosecution History</u>

45. I have reviewed the '011 patent's prosecution history. I see that the Patent Examiner issued a single non-final office action that did not include any prior-art based rejections. Ex. 1002 ('011 patent prosecution history excerpt) at 149-155.

46. I also see that in a notice of allowance issued on December 14, 2022, the Examiner stated the following regarding the Hartley prior art reference that I discuss herein:

> **Hartley** discloses a valve 2, comprising:
>
> a tubular member 22 defining a lumen 8configured to slidably receive a catheter; a constricting mechanism (rotary actuator 12 being rotated) including at least one filament 14 and an actuator 12 coupled to the filament 14, the filament comprising a first portion (a portion wraps around element 8, see Figs. 3-4) extending around at least a portion of the tubular member and a second portion 14 (a portion located inside the actuator 12 and connected to element 16, see Figs. 3-4) having a first end extending from the first portion in one direction and a second end extending from the first portion in another direction, and the actuator 12 comprises a first member 12 coupled to the first end of the filament and a second member coupled to the second end of the filament, wherein the first member and the second member of the

> actuator are moveable between (a) a first position (Fig. 4) wherein the filament circumferentially constricts the lumen to create a seal and (b) a second position (Fig. 3) wherein the filament is moved to at least partially open the lumen.
>
> Hartley fails to disclose that a biasing system configured to bias the first member and the second member to the first position.

Id. at 60. In other words, the Examiner found that Hartley disclosed every limitation in Claim 1 of the ’011 patent except for a “biasing system configured to bias the first member and the second member to the first position. *Id.*

IV. CLAIM CONSTRUCTION

47. I have reviewed the claims, specification, and prosecution history of the ’011 patent, and in my opinion, a person of ordinary skill in the art in September 2017 would have understood that the term “filament” in the claims of the ’011 patent to mean at least: “one or more threads, lines, cords, ropes, ribbons, flat wires, sheets, or tapes.”

48. I understand from counsel that the claim construction analysis should begin with the language of the claims themselves. Here, the claims do not provide much information about the meaning of “filament.” Claim 1 of the ’011 patent says that the constricting mechanism includes “at least one filament and an actuator coupled to the filament.” Ex. 1001 (’011 patent) at Claim 1. Claim 1 goes on to say that the “filament”: (a) comprises “a first portion extending around at least a portion of the tubular member”; (b) “a second portion having a first end

extending from the first portion in one direction and a second end extending from the first portion in another direction"; (c) the "filament circumferentially constricts the lumen to create a seal" in a first position"; and (d) "the filament is moved to at least partially open the lumen" in a second position. *Id.* While this language identifies some features that the filament must have (e.g., a first portion and a second portion), the claim language does not identify the structures or materials that form a "filament."

49. The specification of the '011 patent does identify structures and materials that may form the "filament." The specification discloses that the filament can be formed from a range of materials "including, for example, a polymer, a synthetic, and/or a metal." *Id.* at 9:10-13. The specification further provides that "the filament can comprise a single strand such as, for example, a monofilament, [or] the filament can comprise a plurality of strands that can be, for example, twisted, woven, grouped, and/or fused to form the filament." *Id.* at 9:13-18. The '011 patent also states that "the filament 150 can comprise one or several threads, lines, cords, rope, ribbon, flat wire, sheet, or tape." *Id.* 9:18-20.

50. The specification of '011 patent also explains that "the filament 150 can comprise multiple filaments and specifically, as shown in FIGS. 7 through 9, the filament 150 can comprise a first filament 150-A and a second filament 150-B." *Id.* at 13:6-9. Figure 7 below illustrates an embodiment where the filament is

comprised of multiple loops, and Figures 8 and 9 below illustrate embodiments where the filament is comprised of a "U-shaped section between the two ends of the filament 150" (i.e., a bight):

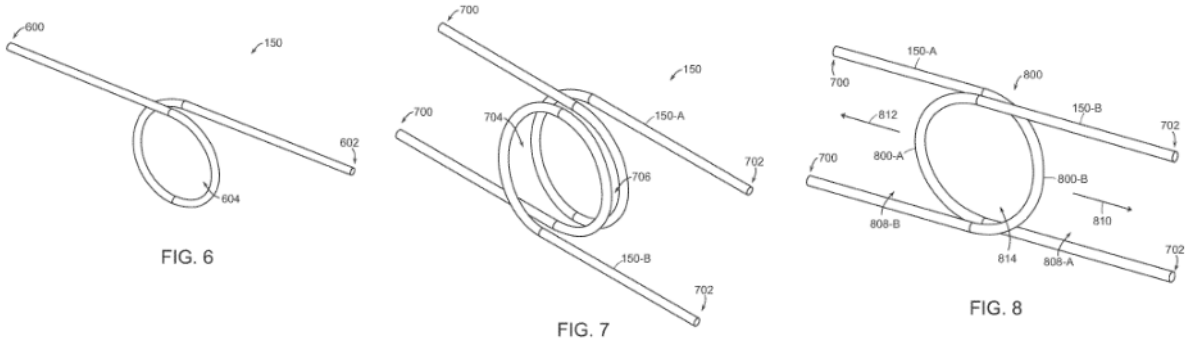

Id. at 13:29-14:46, Figs. 7-9.

51. I understand that the prosecution history can also be relevant in construing patent claims because it can provide insight into how the applicant and the Patent Examiner understood the claims. During prosecution of the '011 patent, the Examiner concluded that the prior art reference Wong, US 2011/0144592 (Ex. 1010), "fails to disclose a filament as required in the claimed invention." Ex. 1002 ('011 patent prosecution history excerpt) at 60. The Examiner's dismissal of Wong is consistent with my understanding of "filament" from the '011 patent. Wong discloses two "sliders" 15 and 17 that can be formed from "a suitable generally non-elastic synthetic material." Ex. 1010 (Wong) at [0042], [0053]. Wong's slider 15 is "formed as an ashlar-shaped element having a rectangular cross-section, integrally formed with a circular stopper 15a at one end

thereof, and including a limiting lever 15b on a middle portion 15c at another end thereof, and two triangle-shaped grooves 15d at two opposing sidewalls 15e in the middle portion 15c which form the ramp-shaped section 23a":

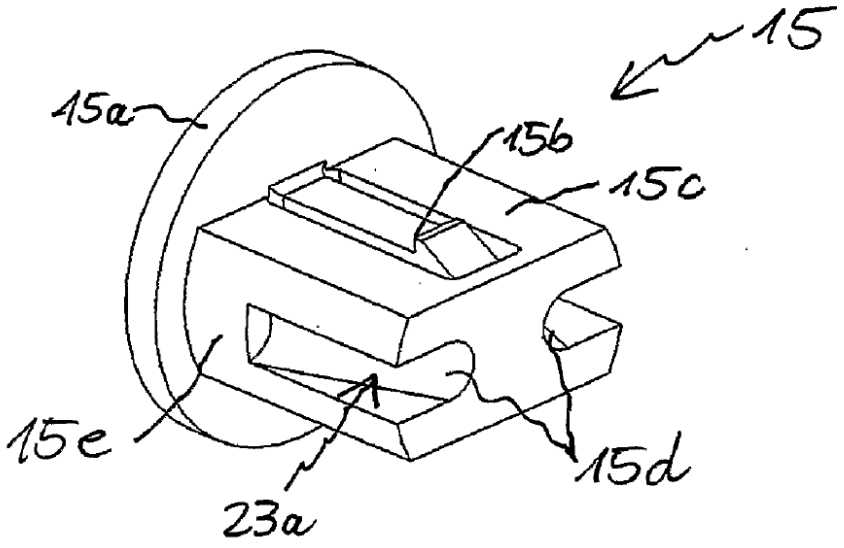

Fig. 3

Id. at [0051], Fig. 3. Wong's slider 17 "is a brake shoe-like element having a V-shaped groove 17a sandwiched between two opposing sidewalls 17b, the V-shaped groove 17a extending along the longitudinal axis of the second slider 17, two protrusions 17c extending in opposing directions out from the two sidewalls 17b, and a holder 17d":

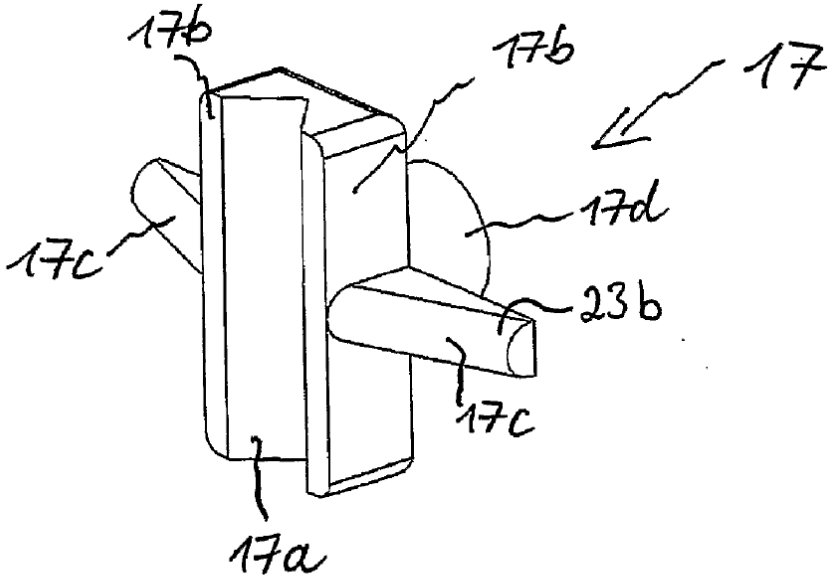

Fig. 4

Id. at [0052], Fig. 4. Thus, Wong's sliders are not "one or several threads, lines, cords, rope, ribbon, flat wire, sheet, or tape" as described for the "filament" claimed in the '011 patent. Ex. 1001 ('011 patent) at 9:10-20.

52. In view of the claim language, specification, and prosecution history discussed above, I believe that a person of ordinary skill in the art in September 2017 would have understood the term "filament" recited in the '011 patent to mean at least: "one or more threads, lines, cords, ropes, ribbons, flat wires, sheets, or tapes."

V. SUMMARY OF IPR GROUNDS

53. I have identified the following grounds of unpatentability in this Declaration:

Ground	Claims Challenged	Basis	References
1	1-9	35 U.S.C. § 102	Schaffer
2	1-9	35 U.S.C. § 103	Schaffer
3	1-9	35 U.S.C. § 103	Schaffer + Hartley
4	1-9	35 U.S.C. § 103	Schaffer + Eller
5	1-3, 5-6, 9	35 U.S.C. § 103	Hartley + Eller

VI. GROUNDS 1-4: CLAIMS 1-9 ANTICIPATED BY SCHAFFER OR OBVIOUS OVER SCHAFFER ALONE OR IN COMBINATION WITH HARTLEY OR ELLER

54. Schaffer describes a hemostasis valve "that blocks the flow of gas or fluid completely and immediately with or without an instrument in place within the gas/fluid path." Ex. 1005 (Schaffer) at [0002], [0008]. As shown in Figure 32 below, Schaffer describes an example of a hemostasis valve that has a tubular seal module 100 extending through the center of the valve and an actuator comprising: (a) two actuator buttons 261 positioned on opposite sides of the seal module, (b) two compression springs 210/267 coupled to the actuator buttons, and (3) two U-shaped actuating members 55 that compress the seal module when the actuating buttons are undepressed:

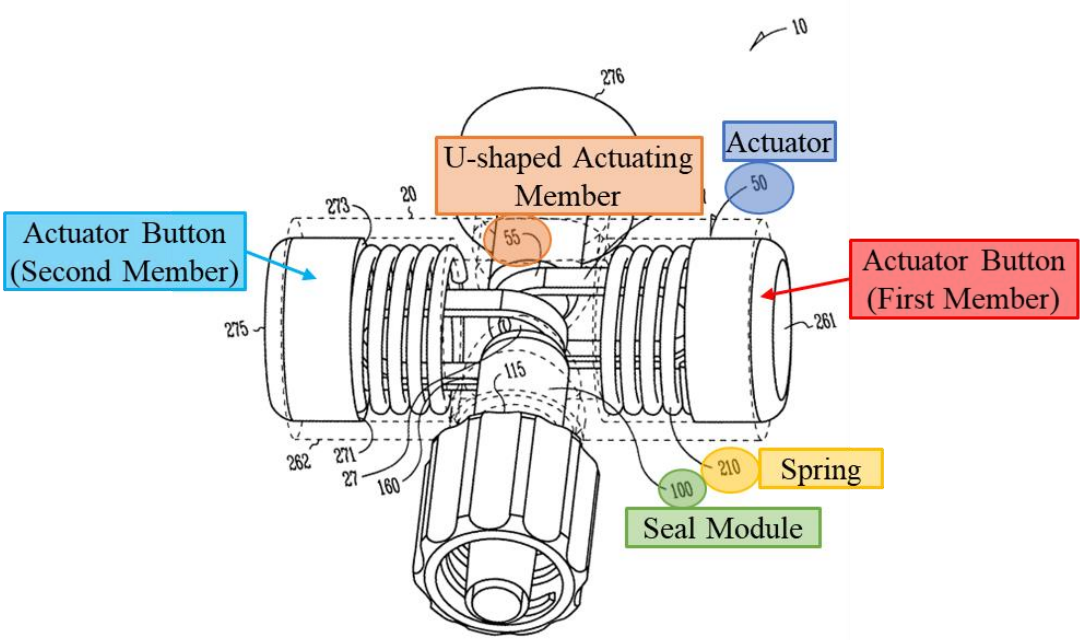
10
276
U-shaped Actuating Member
Actuator
50
273
20
55
Actuator Button (Second Member)
Actuator Button (First Member)
275
261
115
262
271
27
160
210
Spring
100
Seal Module

Fig. 31

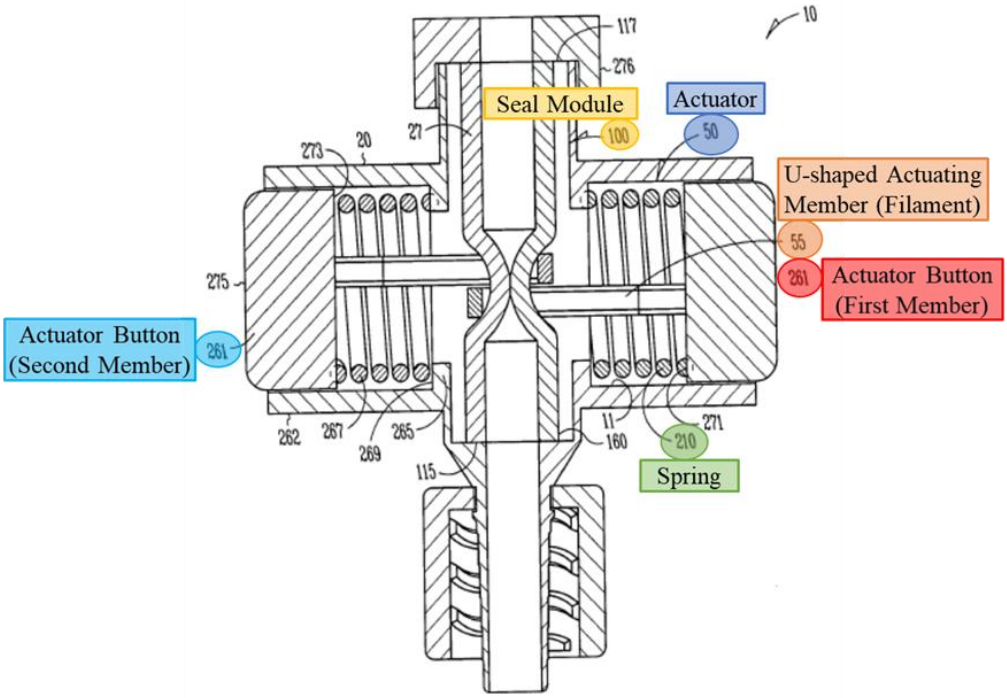
10
117
276
Seal Module
Actuator
27
100
50
273
20
U-shaped Actuating Member (Filament)
55
261
Actuator Button (First Member)
275
Actuator Button (Second Member)
261
262
267
269
265
11
160
271
210
Spring
115

Fig. 32

Id. at [0076]-[0077], Figs. 31-32.[1] Thus, the example of Schaffer's hemostasis valve depicted in Figures 31-34 has the same components in the same arrangement as the valve described and claimed in the '011 patent, which is apparent from the side-by-side comparison of Figure 2 of the '011 patent (left) and Figure 32 of Schaffer (right):

'011 Patent	Schaffer
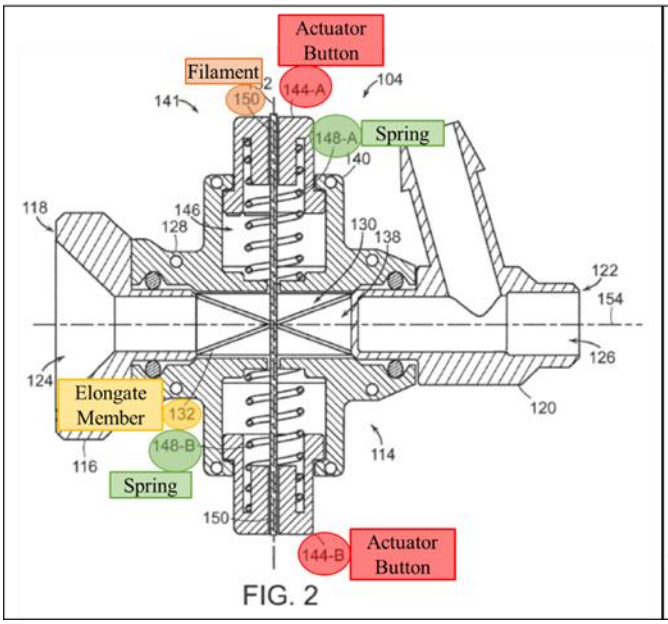	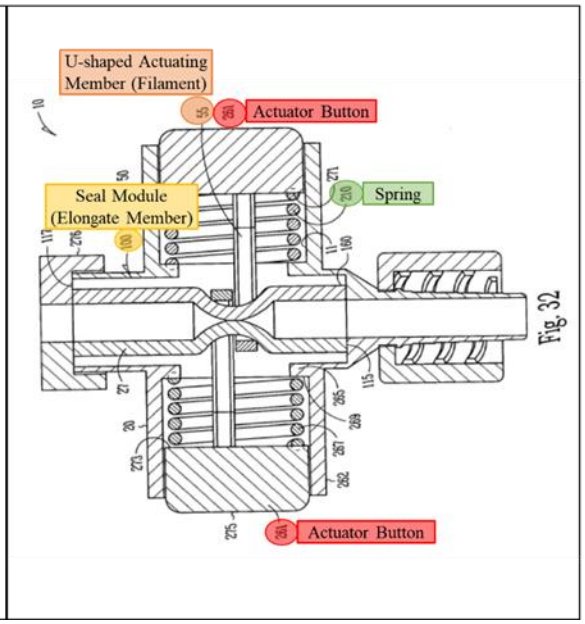

Ex. 1001 ('011 patent) at Fig. 2 (left); Ex. 1005 (Schaffer) at Fig. 32 (right). Because Schaffer discloses all of the components claimed in the '011 patent, it is

[1] In this declaration, I have used the versions of Schaffer's drawings that were submitted to the Patent Office during prosecution of the Schaffer application on June 18, 2003 (Ex. 1008) because they are clearer than the copies of the drawings in Schaffer's published application.

my opinion that Schaffer anticipates Claims 1-9 of the ’011 patent. It is also my opinion that if the Board finds that Schaffer does not anticipate any of Claims 1-9, Claims 1-9 would have been obvious to a person of ordinary skill in September 2017 in view of Schaffer’s disclosures.

55. As noted in the preceding paragraph, Schaffer’s valve includes two U-shaped actuating members that constrict the valve’s central lumen to form a seal. Ex. 1005 (Schaffer) at [0076]-[0077]. As I explain in detail below, Schaffer’s U-shaped actuating members are a “filament,” as that term is defined and claimed in the ’011 patent, because the U-shaped actuating members are at least “flat wires.” *Infra* ¶¶70-75. However, even if Schaffer’s U-shaped actuating members are not a “filament,” using a filament to constrict the central lumen of a hemostasis valve was not a novel or nonobvious concept in September 2017. For example, Hartley and Eller each disclose hemostasis valves that use a filament to constrict the lumen of a tubular member to seal the valve. Hartley’s “filament” is described as a string secured to a rotary actuator, which is shown in Hartley’s Figure 3 below:

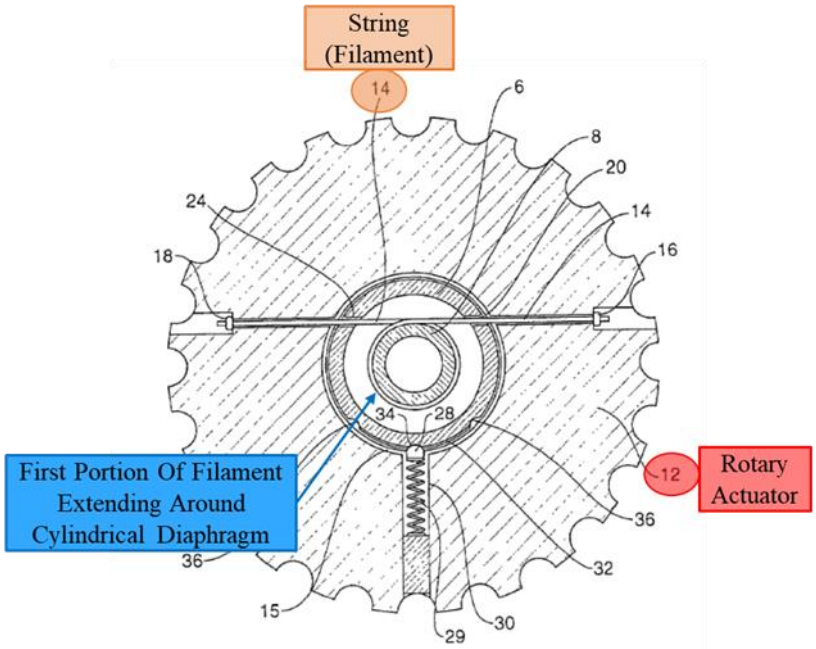

Fig 3

Ex.1006 (Hartley) at [0031], Fig. 3. Eller's "filament" is described as a wire member secured to the actuator and valve housing, illustrated in Eller's Figure 2 below:

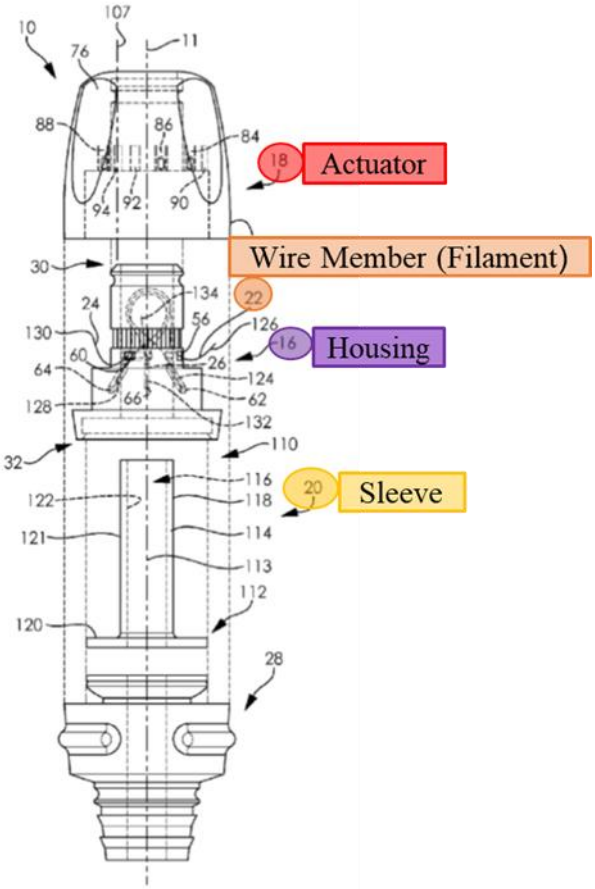

FIG. 2

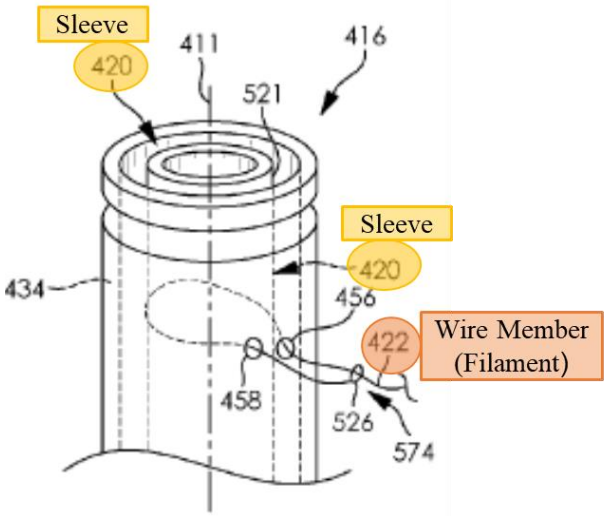

FIG. 16

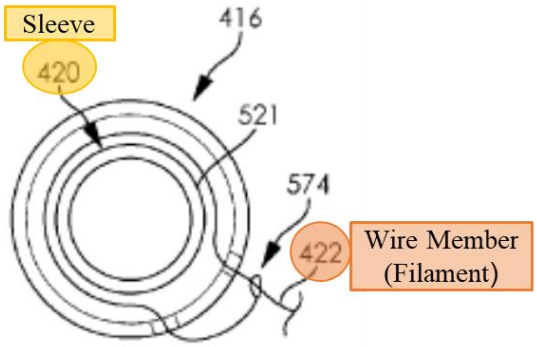

FIG. 17

Ex. 1007 (Eller) at 5:1-5, Figs. 2, 16-17.

56. For the reasons I provide in detail below, a person of ordinary skill in the art would have been motivated and found it obvious to combine Hartley's string or Eller's wire member with the hemostasis valves in Schaffer. Accordingly, based on my review of these references, I believe that the combination of Schaffer with Hartley ***or*** Eller also renders Claims 1-9 obvious.

A. Claim 1

57. Based on my review of the prior art, it is my opinion that Schaffer anticipates Claim 1 or renders Claim 1 obvious alone or in combination with Hartley ***or*** Eller.

1. Preamble

58. The preamble of Claim 1 recites: "A valve." If this preamble is limiting, Schaffer, Hartley, and Eller all disclose a valve.

59. Schaffer discloses examples of a "fluid-stasis valve for use with catheters." Ex. 1005 (Schaffer) at [0002], [0046]. Schaffer's valve is intended to "block[] the flow of gas or fluid completely and immediately with or without an instrument in place within the gas/fluid path" during medical procedures where the catheter is inserted in to a patient's vascular system. *Id.* at [0003], [0008], [0055].

60. Hartley discloses "an access valve which can be controlled to vary the size of the aperture through the valve and be flexible so that a seal may be

formed against an instrument or other object inserted through the access valve." Ex. 1006 (Hartley) at [0004]. Like Schaffer, Hartley's valve is intended for use in "medical applications … where it is desired to seal around a catheter or other instrument … to prevent loss of blood or other fluid." *Id.* at [0002]-[0004].

61. Eller discloses "selective fluid barrier valve devices and methods of treatment using a selective fluid barrier valve device." Ex. 1007 (Eller) at 1:14-16. Like both Schaffer and Hartley, Eller's valve is intended for use in procedures "that require the percutaneous insertion of one or more interventional devices into a bodily passage, such as a portion of the vascular system." *Id.* at 1:20-23.

2. <u>Tubular Member</u>

62. Claim 1 next recites: "a tubular member defining a lumen configured to slidably receive a catheter." Schaffer discloses this limitation.

63. Schaffer's stasis valve includes a seal module 100 that "comprises an elongate tubular structure" and defines a "central lumen 193." Ex. 1005 (Schaffer) at [0049], [0051], [0054], [0075]. Figures 12 and 34 below depict the seal module:

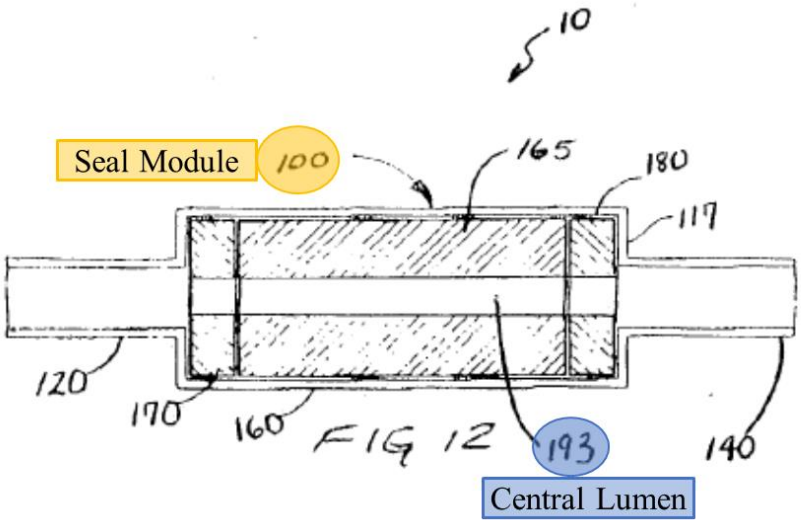
10
Seal Module
100
165
180
117
120
170
160
FIG 12
193
140
Central Lumen

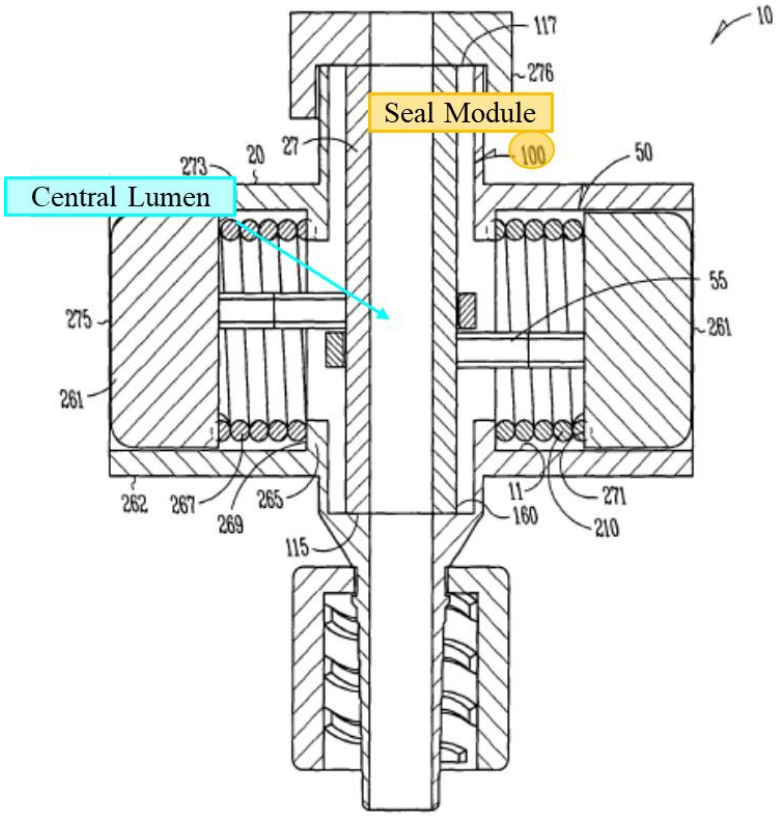
10
117
276
Seal Module
100
50
273
20
27
Central Lumen
55
275
261
261
262
267
265
269
115
11
160
271
210

Fig. 34

Id. at [0022], Figs. 12,[2] 34. Schaffer explains that "a range of instruments [can be] used within the seal module," such as "a catheter, guidewire, needle or fiber." *Id.* at [0056]. Schaffer further explains that "a guidewire and catheter may be placed into the same lumen 193 for extension into a body passage." *Id.* at [0074]. Schaffer's seal module 100 is therefore "a tubular member defining a lumen configured to slidably receive a catheter."

3. <u>Constricting Mechanism</u>

64. Claim 1 next recites: "a constricting mechanism including at least one filament and an actuator coupled to the filament, the filament comprising a first portion extending around at least a portion of the tubular member and a second portion having a first end extending from the first portion in one direction and a second end extending from the first portion in another direction, and the actuator comprises a first member coupled to the first end of the filament and a second member coupled to the second end of the filament, wherein the first member and the second member of the actuator are moveable between (a) a first position wherein the filament circumferentially constricts the lumen to create a

[2] While Figure 12 shows a seal module 100 comprised of three seal members 160, 170, and 180, Schaffer discloses that the "seal module 100 is formed of one or more seal members." *Id.* at [0075], Figs. 32, 34. Thus, the seal module 100 may be formed from a single seal member.

seal and (b) a second position wherein the filament is moved to at least partially open the lumen." Schaffer discloses these limitations or renders them obvious in combination with Hartley or Eller.

a. <u>Actuator</u>

65. Schaffer discloses a stasis valve, depicted in Figures 31-34, that includes two spring-loaded actuators 50 that are "movable from a first position to a second position on opposing sides of the housing." Ex. 1005 (Schaffer) at [0075]-[0076]. The actuators each include an actuator button 261 and a spring 210/267, as illustrated in Figure 32 below:

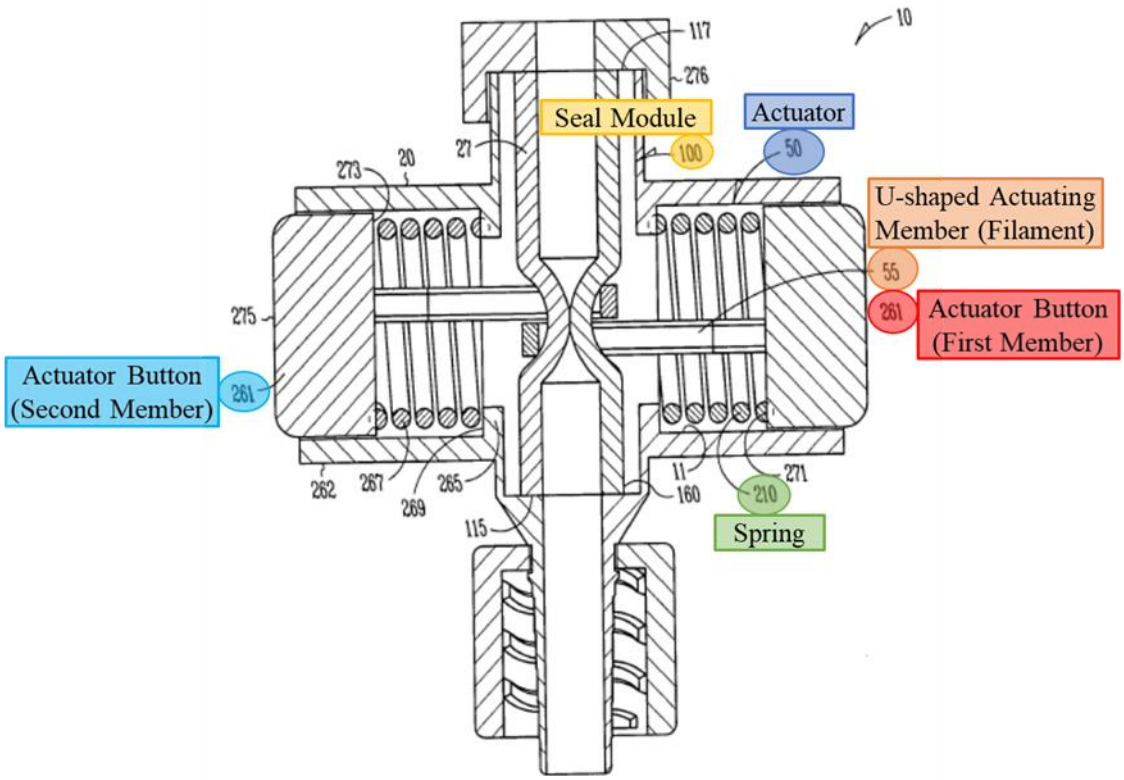

Fig. 32

Id. at [0075]-[0076], Fig. 32.

66. Schaffer describes the embodiment in Figures 31-34 as including "two circular actuators 50," and discloses that each of the two actuators includes a spring secured to an actuator button. *Id.* at [0076]. The '011 patent calls the same structure a single actuator (i.e., a first button 144-A attached to spring 148-A (a "biasing mechanism") and a second button 144-B attached to spring 148-B (a "biasing mechanism")). Ex. 1001 at 8:24-53. Schaffer's description of its structure as two actuators (versus the '011 patent's description of its structure as a single actuator) is immaterial to my analysis because Schaffer's valve has the same components, structure, and function as the actuator described and claimed in the '011 patent. Thus, Schaffer has all the claimed components.

67. Schaffer's actuator buttons are a "first member" and a "second member" of the actuator as claimed in the '011 patent. Outside of the claims, '011 patent does not use the terms "first member" and "second member" to describe any portion of the actuator. The claims of the '011 patent say that the "first member" and "second member" possess the following attributes: (1) they are coupled to a first end and second end of the filament respectively and (2) they are movable between a first position where the filament creates a seal and a second position where the filament is moved to at least partially open the lumen.

See Ex. 1001 ('011 patent) at Claim 1. Schaffer's actuator buttons have these attributes.

68. First, Schaffer's actuator buttons are coupled to the ends of Schaffer's U-shaped actuating members. *See* Ex. 1005 (Schaffer) at [0076]-[0077], Figs. 31-34. As I discuss in detail below, Schaffer's U-shaped actuating members are the claimed "filament." *Infra* ¶¶70-75. Moreover, even if the U-shaped actuating members are not a "filament," a person of ordinary skill in the art would have been motivated to couple the ends of Hartley's string to Schaffer's actuator buttons when substituting Schaffer's U-shaped actuating members for Hartley's string. *Infra* ¶¶76-88. Similarly, a person of ordinary skill in the art would have been motivated to couple Eller's wire member to Schaffer's actuator buttons when substituting Schaffer's U-shaped actuating members for Eller's wire member. *Infra* ¶¶89-100.

69. Second, Schaffer discloses that in a first position, the U-shaped actuating members are "at least partially circumferencially [sic] disposed about the portion 108 of the seal module 100 depressing and at least partially collapsing a portion 108 of the containment structure 160 by a compressive force 67 (e.g. by a spring 210)." Ex. 1005 (Schaffer) at [0077]. This position is depicted in Figure 32, which shows that the central lumen is completely constricted and sealed in the first position:

First Position – Actuator Buttons Undepressed

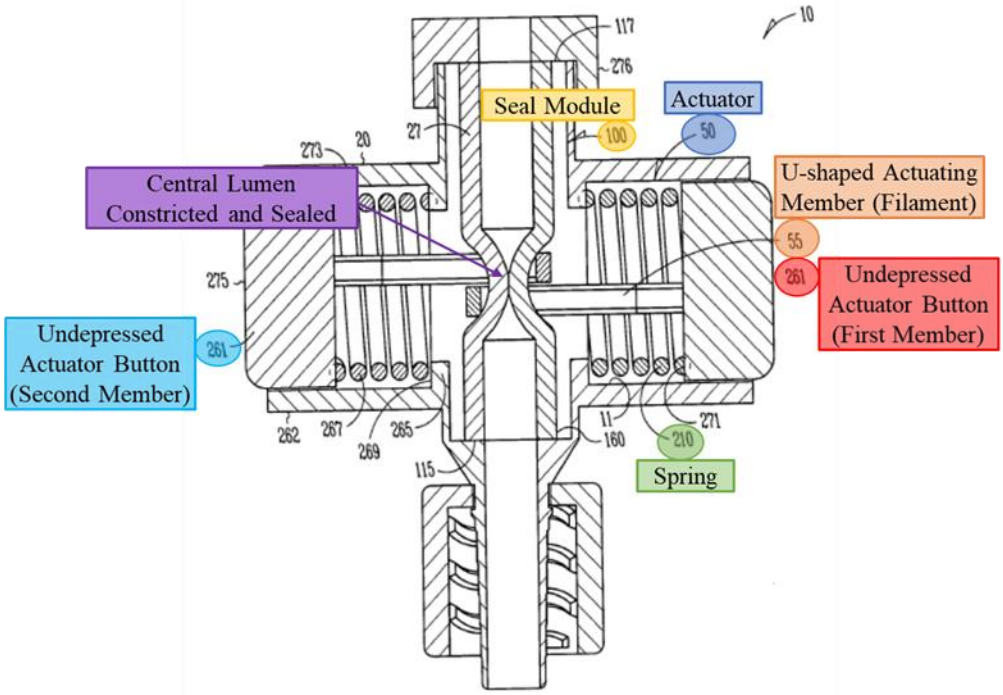

Fig. 32

Id. at [0077], Fig. 32. Schaffer then explains that in a second position, the actuator buttons are depressed, which compresses the spring and allows the actuator members to "disengage opposing outer walls 27 of the seal module 100 allowing the portion 108 of the containment structure 160 to retract to an uncollapsed configuration where gases and fluids can pass therethrough." *Id.* The second position is illustrated in Figure 34:

Second Position – Actuator Buttons Depressed

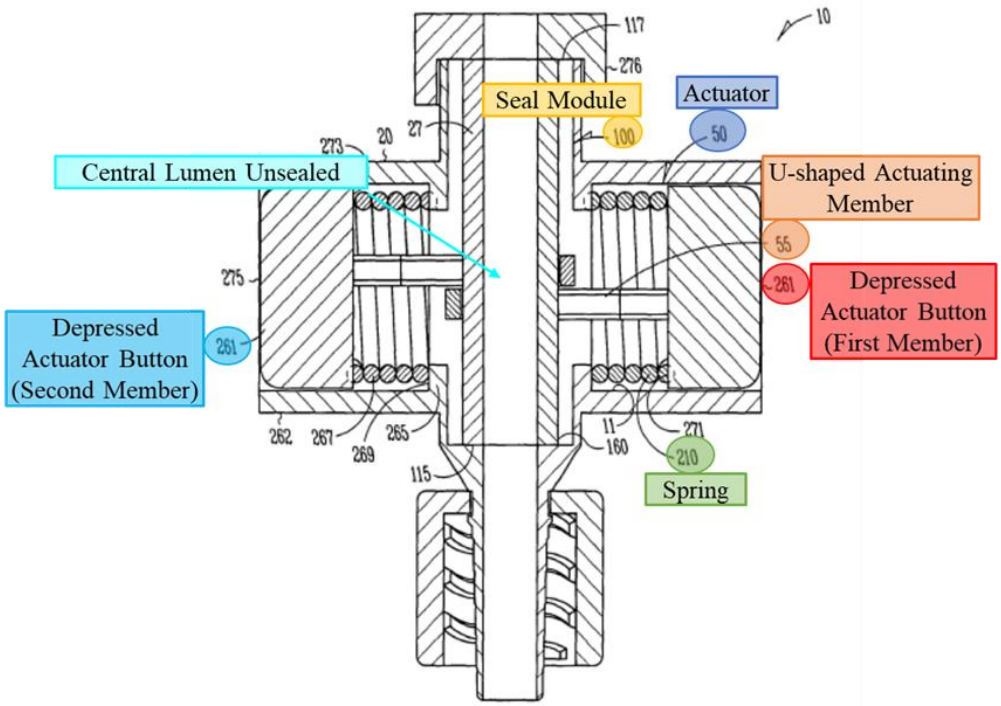

Fig. 34

Id. at [0077], Fig. 34. Thus, Schaffer's actuator buttons are movable between a first position, wherein the lumen is constricted to form a seal, and a second position, wherein the lumen is at least partially opened.

b. <u>Filament</u>

i. <u>Schaffer</u>

70. As I explained in the preceding section, Schaffer's valve includes two U-shaped actuating members that are coupled to the actuator buttons and constrict the valve when the buttons are undepressed:

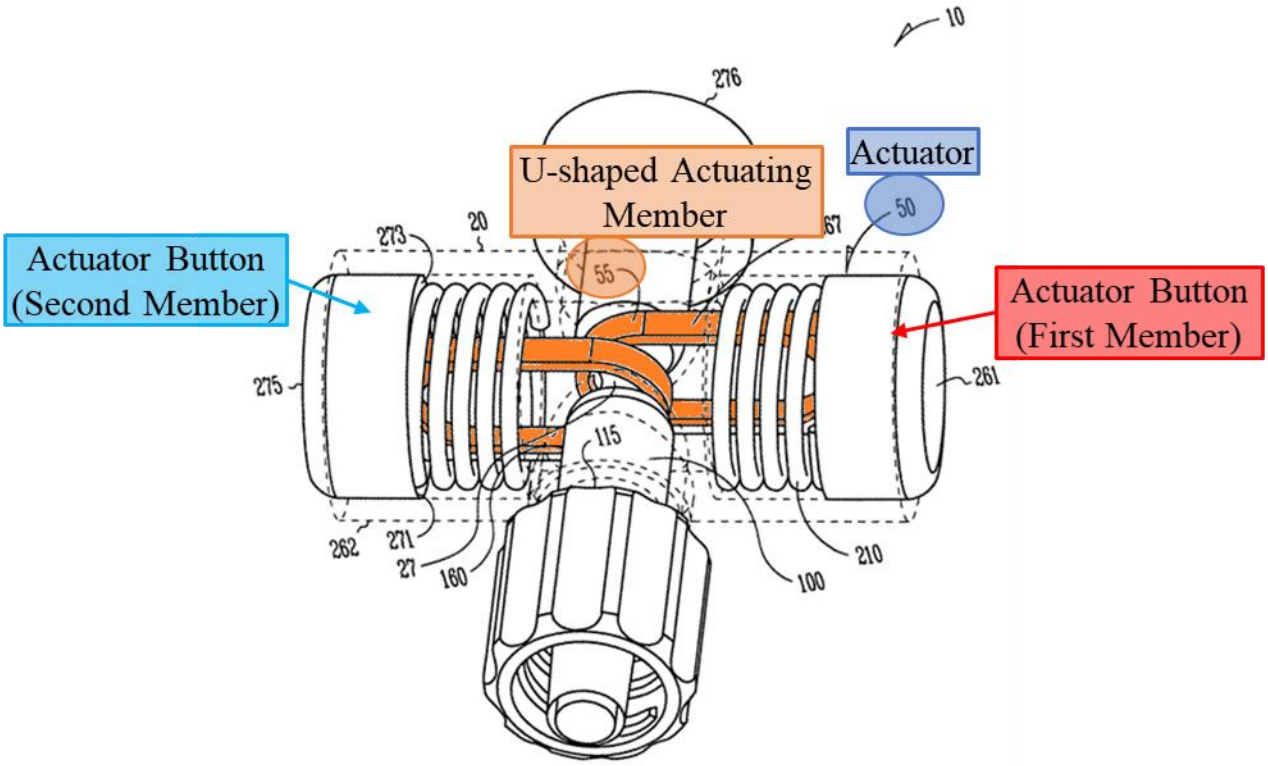

Fig. 31

Id. at [0076], Fig. 31. Schaffer's U-shaped actuating members are a "filament" as claimed in the '011 patent.

71. As I explained in section IV (Heading: "Claim Construction") above, a person of ordinary skill in the art would have understood "filament" to mean at least one or more threads, lines, cords, ropes, ribbons, flat wires, sheets, or tapes based on the description in the '011 patent. *Supra* §IV. Schaffer's U-shaped actuating members meet that definition. Schaffer discloses that the U-shaped actuating members are formed from aluminum or plastic, which are a metal or polymer as disclosed for the filament in the '011 patent. Ex. 1005 (Schaffer) at

[0081]. Schaffer does not describe the shape of the actuating members beyond stating that they are U-shaped; however, Schaffer's figures depict the actuating members as resembling a ribbon, flat wire, sheet, or tape, as described in the '011 patent:

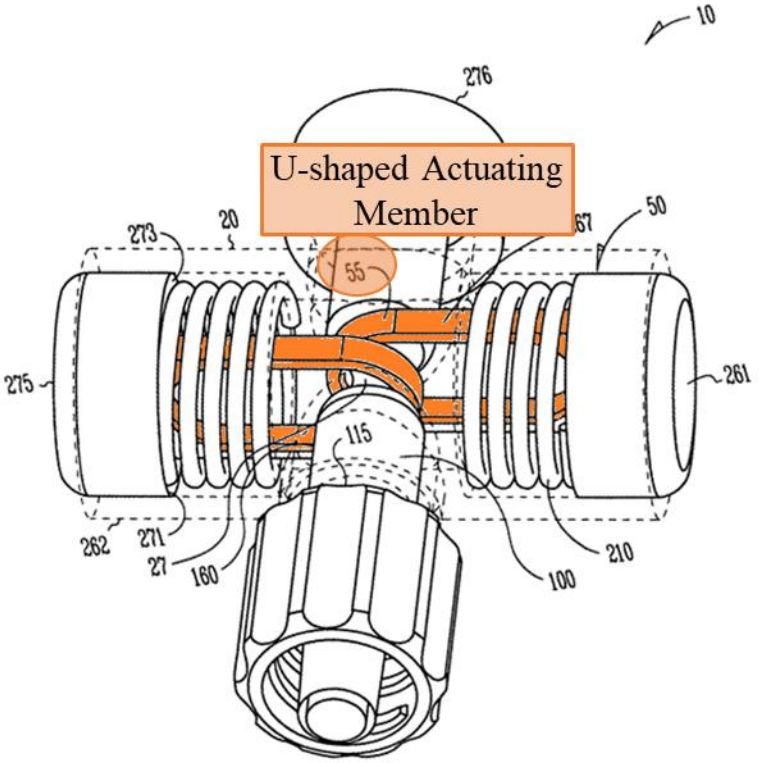

Fig. 31

Id. at Fig. 31; *see also id.* at Figs. 32-34. Moreover, a person of ordinary skill in the art would have understood that Schaffer's U-shaped actuating members would have preferably been formed from a thin, flexible material. Such a material would have permitted the actuating members to conform, as much as possible, to the outer surface of the seal module and tool inserted through the valve. A thin

metallic or plastic flat wire, sheet, ribbon, or tape would have provided the flexibility required for the actuating members to best seal around the tools.

72. As I explained in section III.A (Heading: "Summary of the '011 Patent") above, the '011 patent also discloses that the "**<u>the filament 150</u>** can comprise multiple filaments," including two filaments that form a U-shape as shown in Figure 8 below:

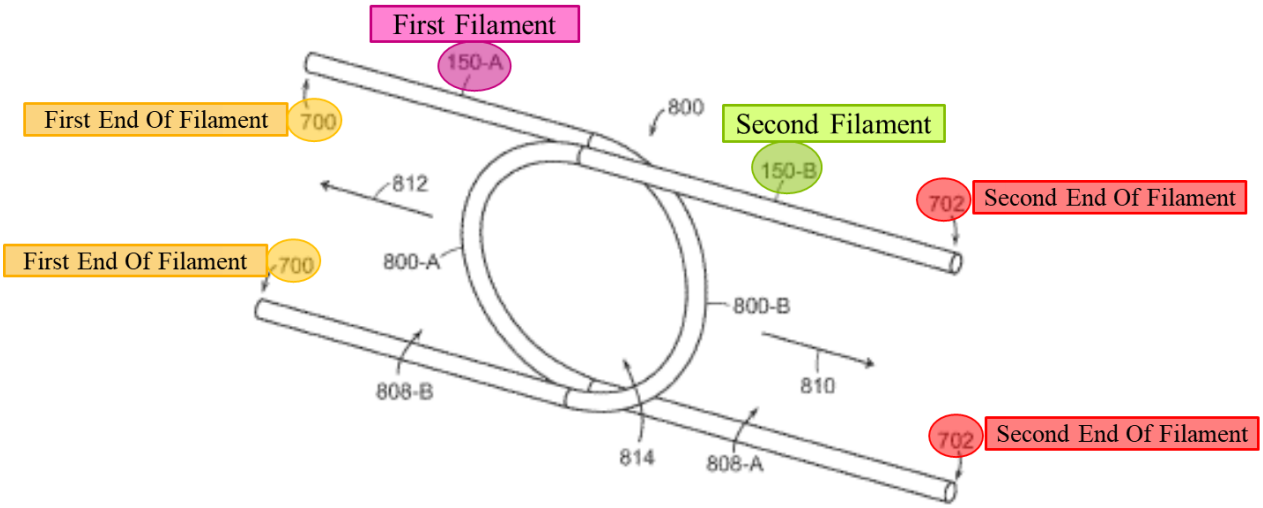

FIG. 8

Ex. 1001 ('011 patent) at 13:6-14:46, Fig. 8 (emphasis added). Schaffer's U-shaped actuating members have the same arrangement as that disclosed in Figure 8 of the '011 patent:

’011 Patent	Schaffer
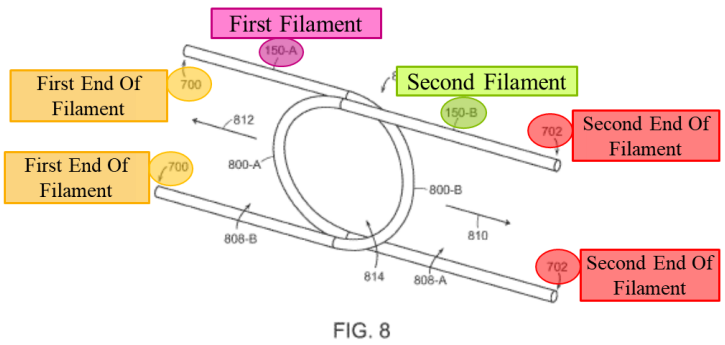 FIG. 8	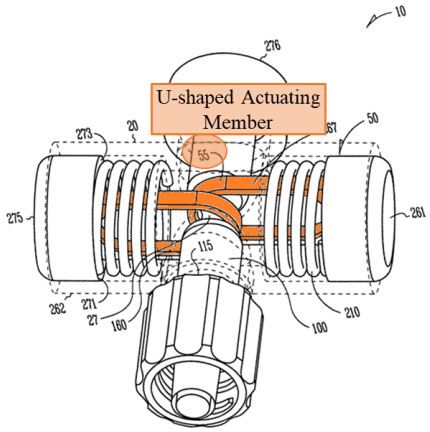 Fig. 31

Ex. 1001 (’011 patent) at Fig. 8 (left); Ex. 1005 (Schaffer) at Fig. 31 (right). The ’011 patent’s explanation that the two U-shaped filaments are “***the filament 150***” confirms that Schaffer’s U-shaped actuating members collectively constitute “at least one filament” as claimed in the ’011 patent. *See* Ex. 1001 (’011 patent) at 12:56-58 (“With reference now to FIGS. 6 through 9, different embodiments and/or configurations of the filament 150 are shown.”), 13:6-14:46, Figs. 8-9.

73. Schaffer discloses that the actuating members are “at least partially circumferencially [sic] disposed about the portion 108 of the seal module 100.” Ex. 1005 (Schaffer) at [0077]. The section of the actuating members that are circumferentially disposed about the seal module is a “first portion [of the filament] extending around at least a portion of the tubular member” as highlighted below:

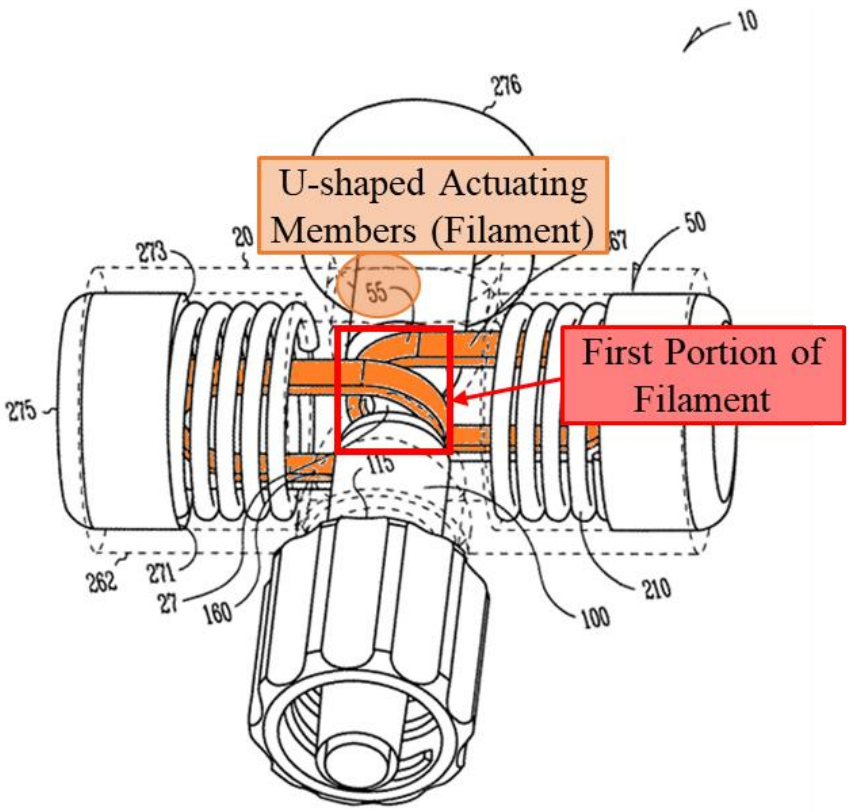

Fig. 31

Id. at [0076], Fig. 31. As shown in Figure 31 above, each of the U-shaped acuating members extends in opposing directions from the seal module 100. *Id.* The portions of the actuating members that are extending in those opposing directions are a "second portion [of the filament] having a first end extending from the first portion in one direction and a second end extending from the first portion in another direction":

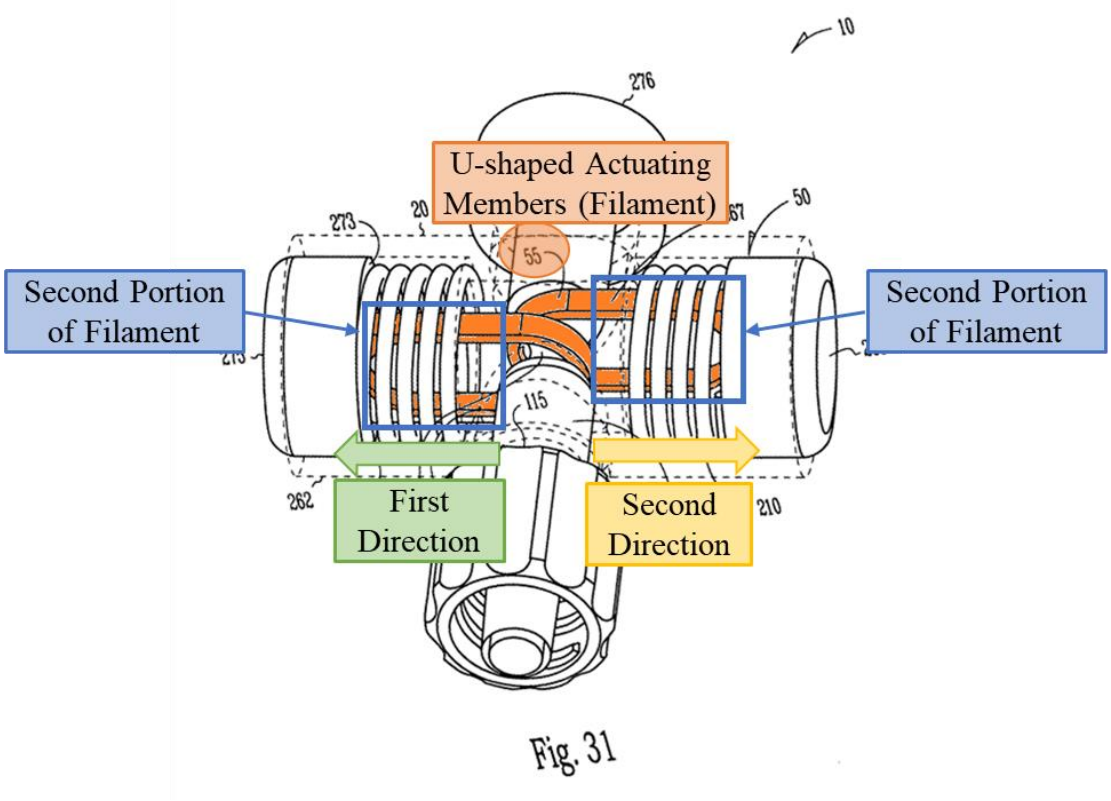

Id., Fig. 31.

74. The '011 patent states that "where **<u>the filament 150</u>** comprises multiple filaments, each of the multiple filaments can have a **<u>first end 700</u>** and a **<u>second end 702</u>**," as shown in Figure 8 below:

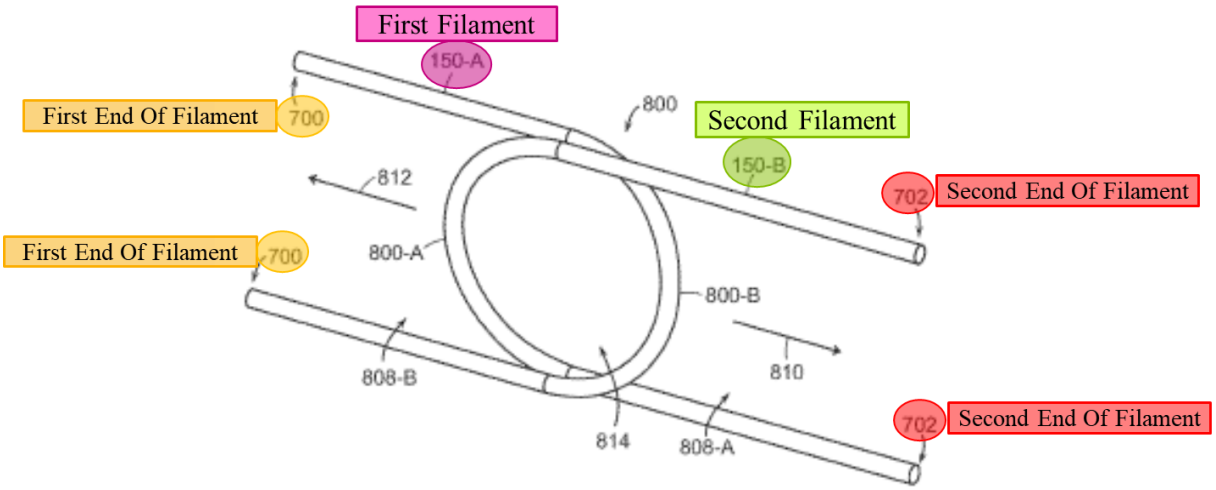

FIG. 8

Ex. 1001 ('011 patent) at 13:9-12, Fig. 8 (emphasis added). Thus, as shown in Figure 8 above, when the filament comprises multiple filaments in a U-shaped configuration, the "first end" of the filament are the ends extending from a first direction from the center of the U-shaped arrangement, and the "second end" of the filament are the ends extending from a second direction from the center of the U-shaped arrangement. *Id.* Accordingly, Schaffer's U-shaped actuating members have a "first end" that is coupled to the first actuator button and a "second end" coupled to the second actuator button as disclosed and claimed in the '011 patent:

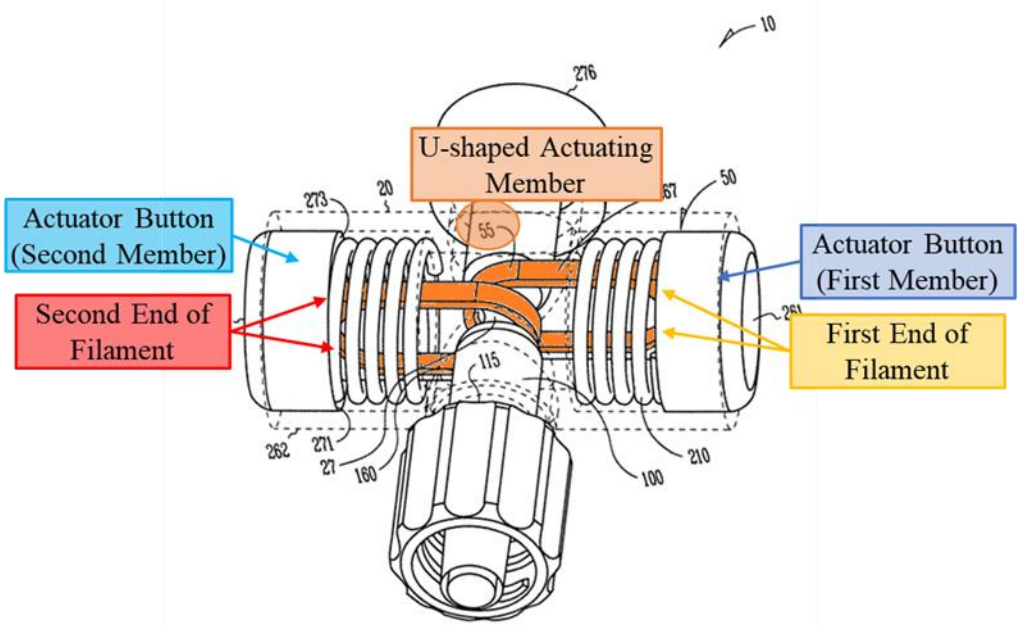
10
276
U-shaped Actuating Member
Actuator Button (Second Member)
Second End of Filament
Actuator Button (First Member)
First End of Filament
273
20
55
50
261
115
262
271
27
160
100
210

Fig. 31

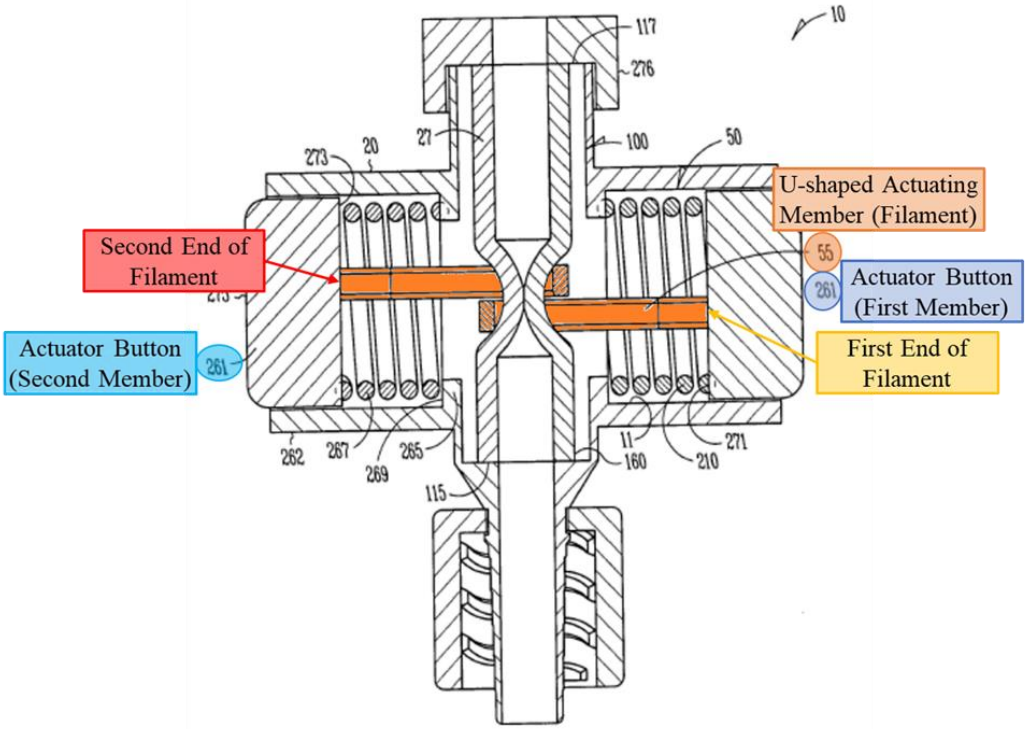
10
117
276
27
100
50
273
20
U-shaped Actuating Member (Filament)
Second End of Filament
55
261
Actuator Button (First Member)
Actuator Button (Second Member)
First End of Filament
262
267
265
269
11
160
271
210
115

Fig. 32

Ex. 1005 (Schaffer) at [0076], Figs. 31-32. Schaffer's U-shaped actuating members, therefore, disclose the "at least one filament" as claimed in the '011 patent.

75. Even if the Board finds that that Schaffer's U-shaped actuating members do not "circumferentially constrict[] the lumen [of Schaffer's valve] to create a seal," a person of ordinary skill in the art would have found it obvious to modify the U-shaped actuating members to circumferentially constrict the lumen. Schaffer discloses that the actuating members are "at least partially circumferencially [sic] disposed about the portion 108 of the seal module 100." Ex. 1005 (Schaffer) at [0077]. The phrase "at least partially circumferencially [sic] disposed" strongly suggests that the U-shaped actuating members can also be ***completely*** circumferentially disposed around the seal module. A person of ordinary skill in the art would have been motivated to configure the U-shaped actuating members to circumferentially constrict the lumen to form a better seal and avoid the gaps I discuss below. *Infra* § VI.A.3.b.ii (Section titled "Hartley"). The required adjustments, to the extent any adjustments were needed, would have been simple, including modifying the shape, material, and/or dimensions of the U-shaped actuating members to better conform to the cylindrical shape of the seal module. For example, the actuating members could be formed from a thin, flexible sheet or flat ribbon of aluminum or plastic so that they have the flexibility

to conform to the outer surface of the cylindrical seal module. A person of ordinary skill in the art would have reasonably expected success in making these simple and routine adjustments. Actuating members with this type of structure and flexibility would circumferentially constrict the lumen of Schaffer's seal module when pulled in opposite directions by the actuator buttons. For these reasons, if Schaffer does not disclose the "filament" limitation, it renders the limitation obvious.

ii. <u>Hartley</u>

76. Hartley discloses a fluid control valve that "can be controlled to vary the size of the aperture through the valve and be flexible so that a seal may be formed against an instrument or other object inserted through the access valve." Ex. 1006 (Hartley) at [0004]. As shown in Figure 1 below, Hartley's valve includes a cylindrical valve housing that houses a "cylindrical elastomeric diaphragm" and a rotatory actuator mounted onto the housing:

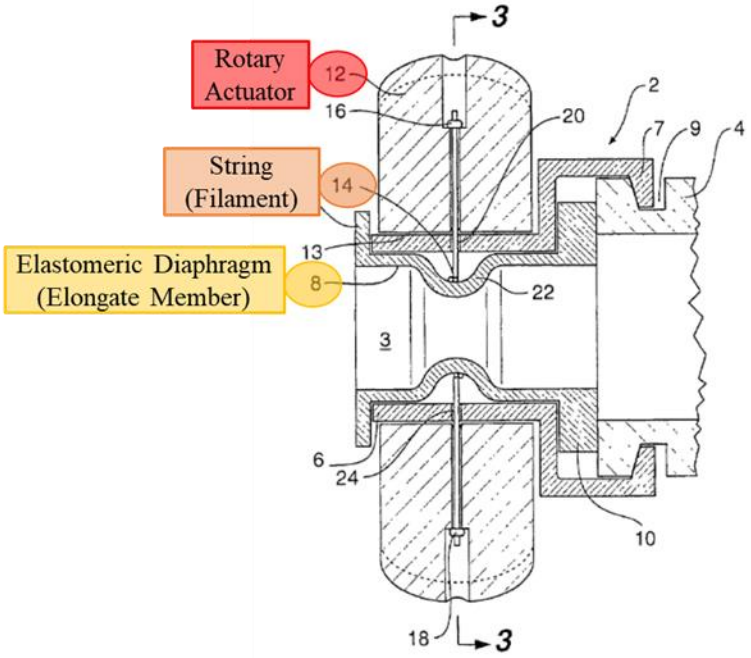

Fig 1

Id. at [0031], Fig. 1. Hartley's valve also includes a "flexible member," referred to as a "string" in the Detailed Description section, that is "mounted into the rotary actuator. *Id.* at [0005], [0031]. Hartley discloses that the flexible member "may be a string, suture or band or other suitable material." *Id.* at [0017]. Hartley's flexible member is therefore a "filament" as disclosed and claimed in the '011 patent. *See* Ex. 1001 ('011 patent) at 9:18-20 (disclosing that the filament can constitute "one or several threads, lines, cords, rope, ribbon, flat wire, sheet, or tape").

77. Hartley discloses that the "flexible member may be mounted at both of its ends to an actuator arrangement and hence the flexible member can be

simultaneously pulled in substantially opposite directions to constrict the valve." Ex. 1006 (Hartley) at [0010]. As shown in Figure 3 below, Hartley's string is secured to the rotary actuator at a first end via knot 16 and "then passes through an aperture 20 in the cylindrical housing 6 and then is wound preferably twice around the cylindrical diaphragm 8 . . . and then passes through a further aperture 24 in the cylindrical housing before being fixed by knot 18 again in the rotary actuator":

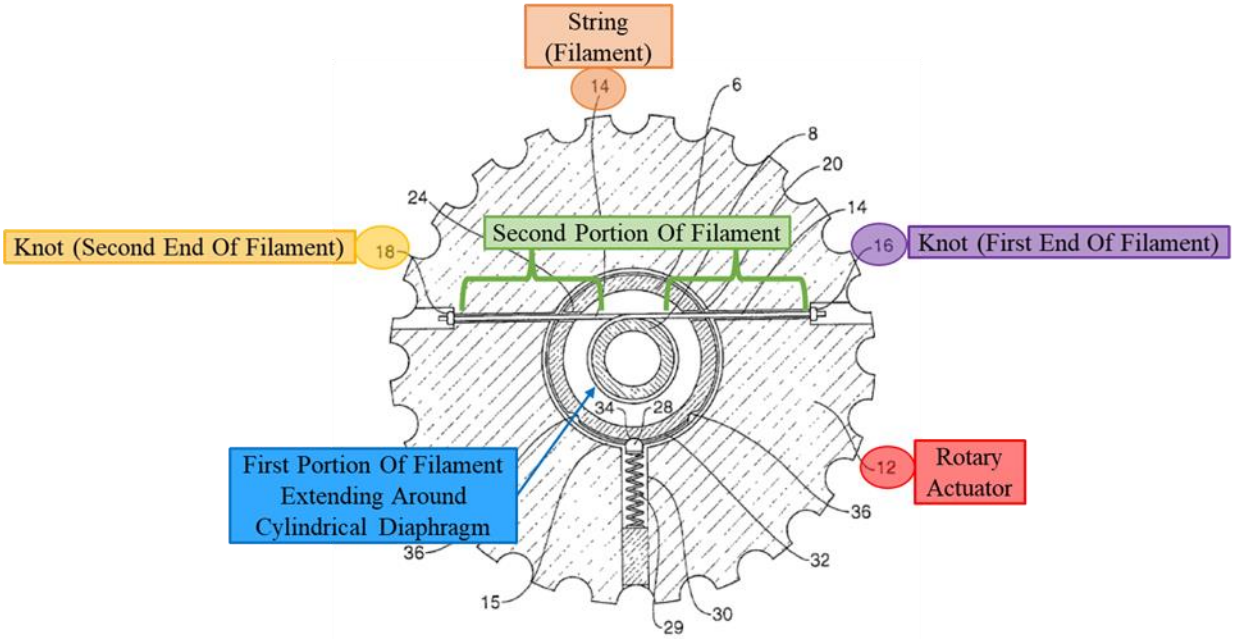

Fig 3

Id. at [0031], Fig. 3. Hartley's string therefore includes "a first portion extending around at least a portion of the tubular member" as recited in Claim 1. The portion of Hartley's string that "is wound preferably twice around the cylindrical diaphragm" is the claimed "first portion." *See id.* at [0031].

78. Hartley's string also includes a "a second portion having a first end extending from the first portion in one direction and a second end extending from the first portion in another direction." The portion of Hartley's string that extends away from the cylindrical diaphragm in opposite directions is the claimed "second portion":

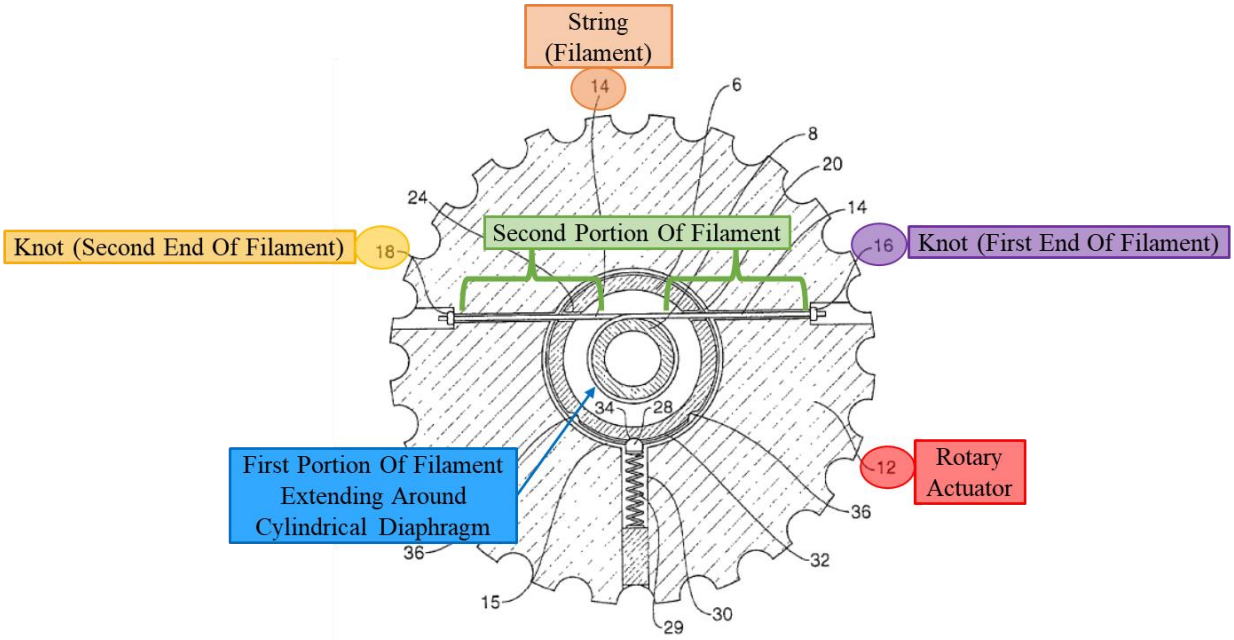

Fig 3

Id. at Fig. 3. The first end of second portion of Hartley's string is secured to the actuator at knot 16 and the second end of second portion is secured to the actuator at knot 18. *See id.* at [0031], Fig. 3.

79. Hartley discloses that "[r]otation of the rotary actuator 12 with respect to the cylindrical housing 6 will cause the string 14 to be pulled in both directions at once and hence the cylindrical diaphragm 8 to be constricted." *Id.* at

[0031], [0034], Fig. 4. Hartley also discloses that its valve "will close over a range of diameters of devices passed through the valve or can close completely down to be self sealing." *Id.* at [0037]. A person of ordinary skill in the art would have understood that Hartley's ability to seal over a range of devices and to self seal when no device is passed through the valve is an important benefit for a hemostasis valve used during intravascular procedures, and it is important to minimize blood loss when a tool is inserted through the valve and before/after the tool is inserted. *See, e.g.,* Ex. 1005 (Schaffer) at [0008] (recognizing that "what is needed is a durable stasis valve that blocks the flow of gas or fluid completely and immediately with or without an instrument in place within the gas/fluid path").

80. A person of ordinary skill in the art would have been motivated to replace Schaffer's U-shaped actuating members with Hartley's string/flexible member for several reasons. First, a person of ordinary skill in the art would have been motivated by Hartley's disclosure that its valve employing the string can "close over a range of diameters of devices passed through the valve or can close completely down to be self sealing." Ex. 1006 at [0037]. A person of ordinary skill in the art would have known that multiple tools of varying sizes could be required for a medical procedure, so Hartley's ability to seal around a range of diameters would have been beneficial. A person of ordinary skill in the art would have also recognized that a stasis valve should seal and prevent leakage of fluid

even when no tool is inserted through the valve, such as at the beginning or end of a medical procedure. Thus, Hartley's stated ability of its string to completely close the lumen when no tool is inserted would have also been a valuable benefit to a person of ordinary skill.

81. Second, a person of ordinary skill in the art would have recognized that Hartley's flexible string may better seal the valve than Schaffer's metallic/plastic U-shaped actuating members. Hartley's flexible string may better conform to varying diameters than Schaffer's U-shaped members. A person of ordinary skill in the art would have recognized that if a tool did not fit the size of Schaffer's U-shaped members, small gaps could form between the tool and the valve's lumen, as illustrated in the graphic below:

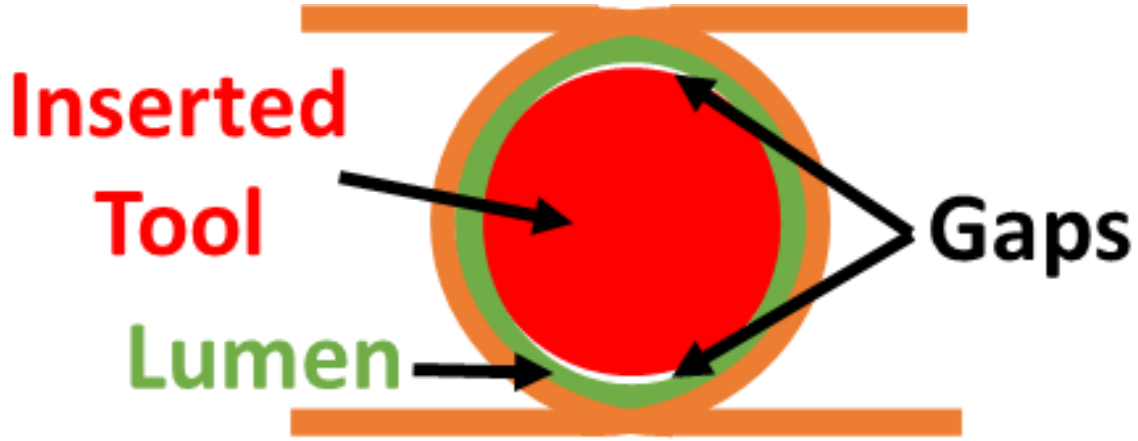

However, Hartley's string encircles and, depending on the materials, may conform to the size and shape of a wider range of tools used with the valve. This ability to

accommodate more tools would have been a highly desirable feature to a person of ordinary skill in September 2017.

82. Third, the combination of Hartley's string and Schaffer's valve would have merely entailed the substitution of one known element (Hartley's string) for another (Schaffer's U-shaped actuating members) and would have yielded the predictable results of constricting the central lumen of Schaffer's valve to form a seal. I do not see any significant technical challenges that a person of ordinary skill would have confronted in substituting Hartley's string for Schaffer's U-shaped actuating members, and I believe that the substitution would have been well within the level of ordinary skill in September 2017.

83. Fourth, as Schaffer recognizes, fluid stasis valves generally comprise "a resilient material in compression within a housing or clamping member." Ex. 1005 (Schaffer) at [0003]. There were a finite number of ways to compress the resilient material in a stasis valve to create a seal in September 2017. Hartley and Schaffer disclose two such methods – Hartley's single string and Schaffer's two U-shaped actuating members formed from aluminum or plastic. As I discuss in the following section, Eller discloses a third option: one or more wire members. *Infra* §VI.A.3.b.iii. A person of ordinary skill in the art in September 2017 would have found it obvious to select from these finite, predictable options. And as I

explain below, they would have had a reasonable expectation of success in implementing them.

84. A person of ordinary skill in the art would have had reasonably expected success in substituting Hartley's string for Schaffer's U-shaped actuating members for multiple reasons. First, Hartley teaches a simple method for attaching its string to an actuator – a knot at the terminal ends of the string. Ex. 1006 (Hartley) at [0031]. A person of ordinary skill in the art would have reasonably expected that this same method could be used to attach Hartley's string to each of Schaffer's actuator buttons. For example, small holes could be made in each of Schaffer's actuator buttons, and each end of the string could be threaded through the hole on the opposite buttons and knotted on the other side. This would have been a very simple modification, and a person of ordinary skill in the art would have been fully capable of implementing it in September 2017. The demonstrative illustration that I provide below depicts a basic diagram of how this modification could be achieved. As shown, the first end of the string would be secured to the first actuator button (first actuator member), the string would loop at least once around the lumen of Schaffer's valve, and then the second end of the string would be secured to the second actuator button (second actuator member) on the opposite side of the valve:

Demonstrative Illustration
Schaffer + Hartley's String

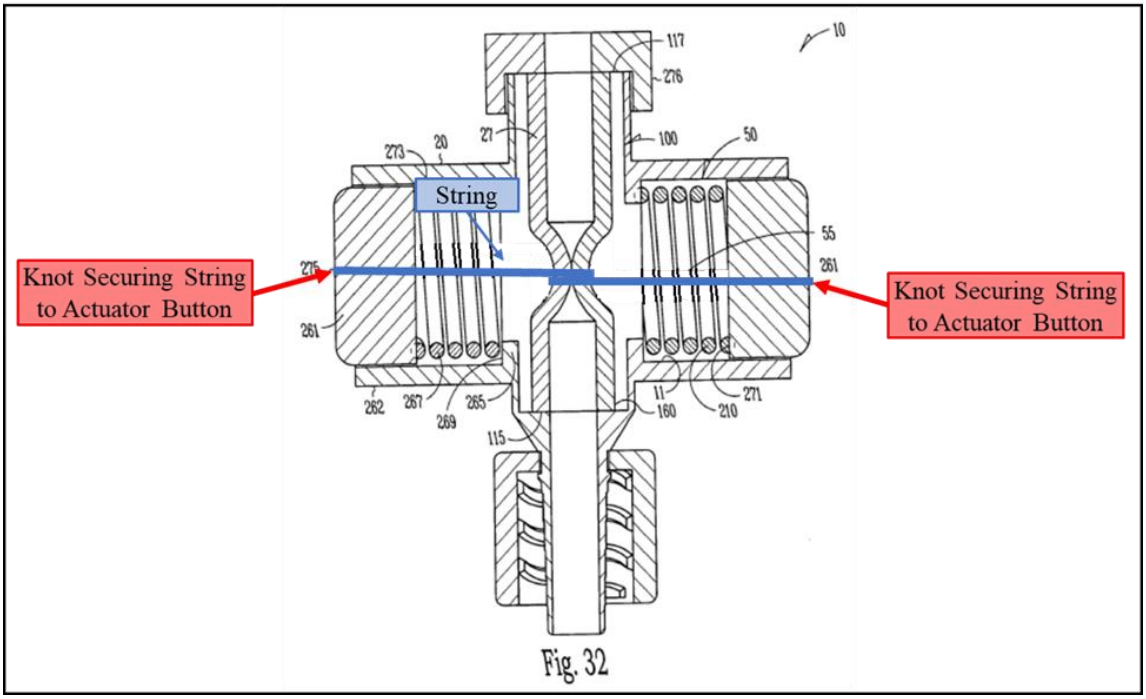

85. Second, a person of ordinary skill in the art would have recognized that Hartley's string and Schaffer's U-shaped actuating members use similar mechanisms to compress and seal the central lumen of the valves, and therefore no additional modifications of Schaffer's valve would be necessary when implementing Hartley's string. Hartley's string seals the valve in response to rotation of the actuator, which causes "the string 14 to be pulled in both directions at once and hence the cylindrical diaphragm 8 to be constricted" as shown in Figures 3 (relaxed) and 4 (constricted):

Relaxed State

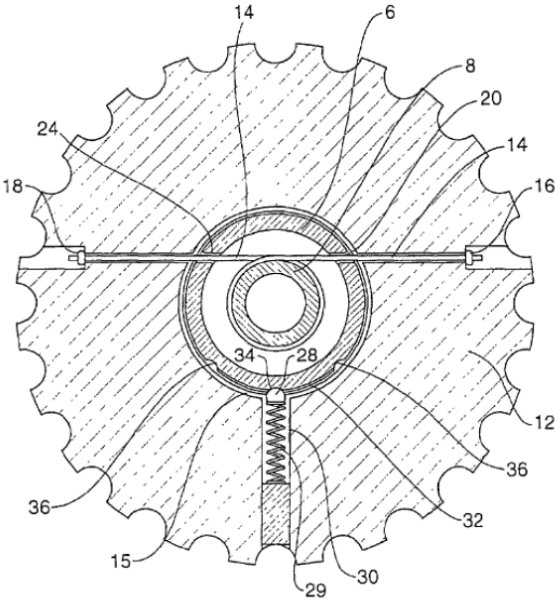

Fig 3

Constricted State

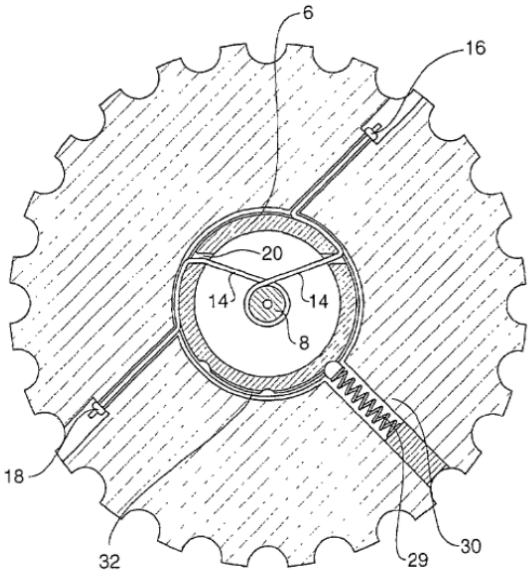

Fig 4

Ex. 1006 (Hartley) at [0031], Figs. 3-4. Schaffer's U-shaped actuating members seal the central lumen when compressive forces supplied by the springs attached to the actuator buttons cause the U-shaped actuating members to constrict and collapse the seal module, as illustrated in Figure 32:

Constricted State

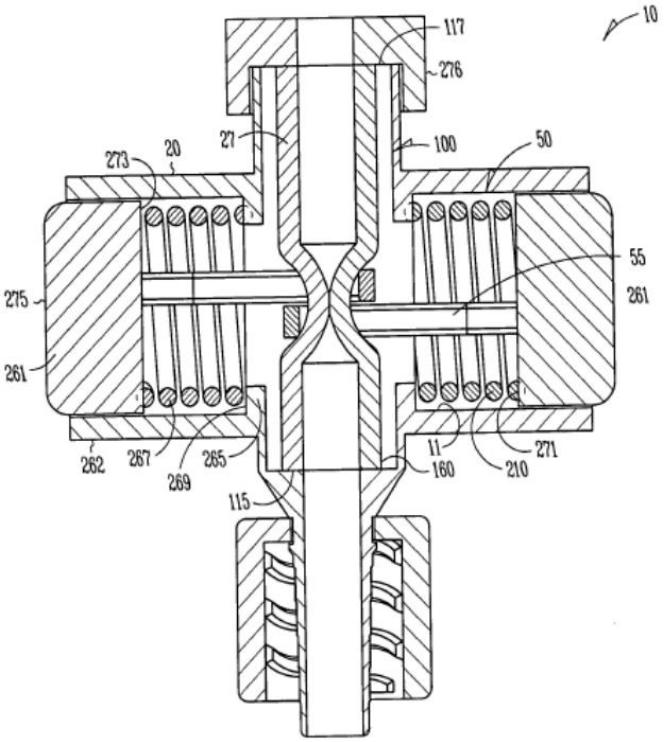

Fig. 32

Ex. 1005 (Schaffer) at [0077], Fig. 32. Thus, both Hartley and Schaffer seal the central lumen of the valve by pulling the string/actuating members in opposite directions to constrict and compress the central lumen of the valve. *See* Ex. 1005 (Schaffer) at [0077], Ex. 1006 (Hartley) at [0031].

86. In view of the similarities between the operation of Hartley and Schaffer's valves, a person of ordinary skill in the art would have expected Hartley's string to serve as a reasonable, if not superior, substitute for the U-shaped actuating members. In a first position, Schaffer's undepressed actuator buttons would cause the "string 14 [attached to the buttons] to be pulled in both

directions at once." *See* Ex. 1005 (Schaffer) at [0077]; Ex. 1006 (Hartley) at [0031]. This would cause the string to constrict and collapse the lumen of Schaffer's containment structure, sealing the valve.

87. Then, when Schaffer's actuator buttons are depressed and moved to the second position, the compressive forces from the springs would be relaxed, relieving the tension on the string, and causing the string to loosen around the central lumen so that the lumen at least partially opens. *See* Ex. 1005 (Schaffer) at [0077]; Ex. 1006 (Hartley) at [0031]. Schaffer discloses that the seal module is formed from a "highly deformable, non-compressible material 166 (e.g., plastic)" and is "configured to maintain an open lumen 193 when no compressive force 67 is applied." Ex. 1005 (Schaffer) at [0054]. Thus, a person of ordinary skill in the art would have expected that Schaffer's lumen would have the resilience to return to its open configuration when the actuator buttons are pressed inwardly, and the tension on the string is released such that "no compressive force [] is applied" to the lumen." *Id.*

88. Moreover, if the person of ordinary skill found that the resiliency of Schaffer's lumen required adjustment to function with Hartley's string, the person of skill would have possessed the skills and knowledge to select an appropriate material with the proper resiliency. There were a range of suitable materials disclosed in the prior art for forming the lumen of a hemostasis valve. For

example, Schaffer discloses that the materials for the lumen can include "modified vinyl, silicone, polyurethane or a combination thereof," as well as modifications of those materials with "waxes and/or oils or un-cross-linked modifiers." Ex. 1005 (Schaffer) [0081]. Hartley discloses that "[p]referably the cylindrical diaphragm is formed from a resilient material so that after constriction and release of the flexible member the valve reopens" and further discloses that "[i]n a preferred form the cylindrical diaphragm of the valve may be constructed from a elastomeric material such as silicone rubber." Ex. 1006 (Hartley) at [0008], [0016]. Eller discloses a variety of sleeves made from "NuSil MED-4755, NuSil MED-4765, and NuSil MED-4014." Ex. 1007 (Eller) at 36:27-60. The components referred to as the "seal module" in Schaffer, the "cylindrical diaphragm" in Hartley, and the "sleeve" in Eller all correspond to the portion of the hemostasis valve that forms the central lumen of the valve. *See* Ex. 1005 (Schaffer) at [0049], [0051], [0054], [0075]; Ex. 1006 (Hartley) at [0031]; Ex. 1007 (Eller) at 11:60-64. Thus, the prior art would have provided a person of ordinary skill with a range of suitable options for selecting a suitable lumen material that was both deformable and possessed the resilience to return to its open state when constricting force is removed.

iii. <u>Eller</u>

89. Eller discloses a hemostasis valve that includes "a housing 16, an actuator 18, a sleeve 20, [and] a first wire member 22":

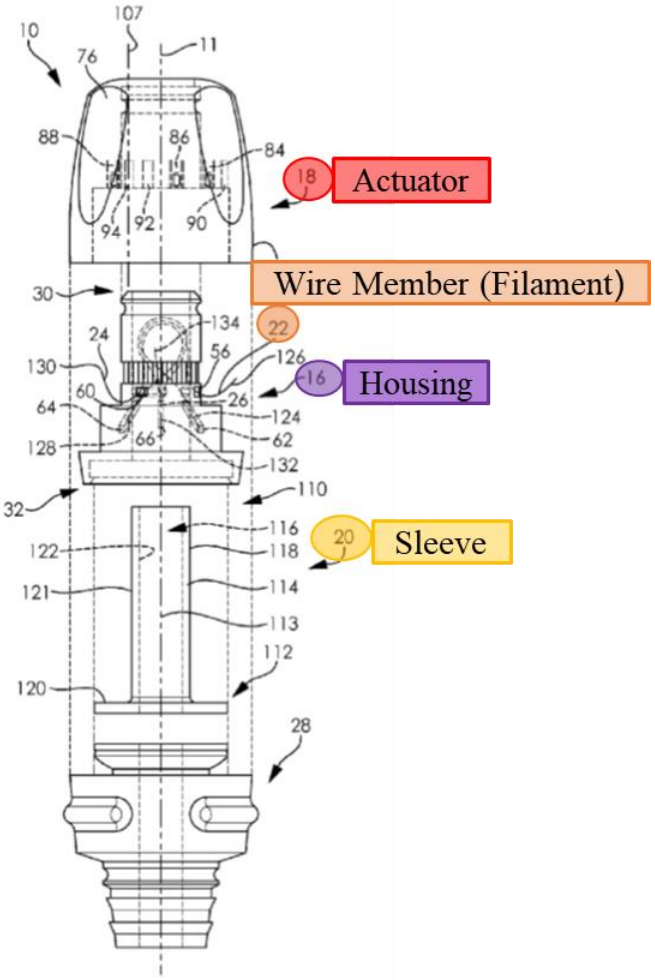

FIG. 2

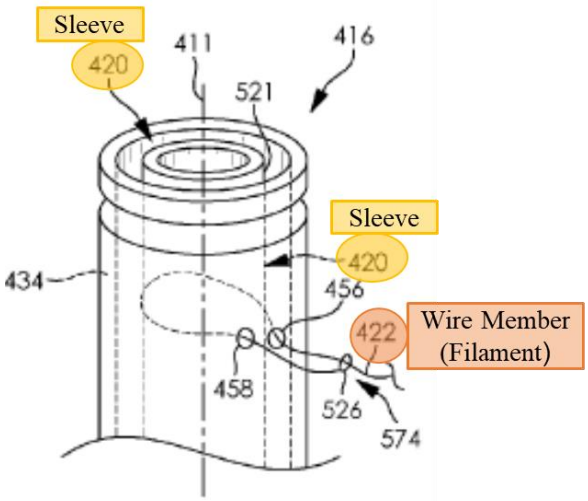

FIG. 16

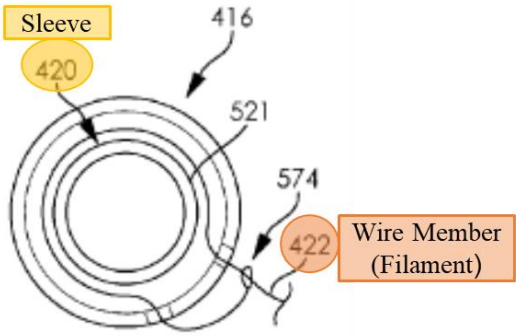

FIG. 17

Ex. 1007 (Eller) at 5:1-5, Figs. 2,[3] 16-17. Some of Eller's examples, Figure 2 above, include three wire members: a first wire member, a second wire member, and a third wire member. *See* Ex. 1007 (Eller) at 5:1-5, Figs. 2, 8-10. However, Eller also discloses that "a selective fluid barrier device can include any suitable number of wire members," including only one wire member. *Id.* at 16:7-19. Eller depicts examples having only one wire member in Figures 15-17 and 20-22. *Id.* at 21:37-22:31, 23:50-25:9, Figs. 15-17, 20-22. I also note that Claim 1 of the '011 patent recites that the valve includes "at least one filament," meaning that the claims contemplate a valve having more than one filament. Ex. 1001 ('011 patent) at Claim 1. Thus, Eller's disclosure of examples having more than one

[3] Eller's Figure 2 shows an exploded view of the device. Ex. 1007 (Eller) at 2:46-47. An un-exploded view is depicted in Figure 1. *Id.* at Fig. 1.

wire member does not affect my opinions on whether the claims of the ’011 patent are patentable.

90. Eller says that its wire member “can have any suitable structure and comprise any suitable number of strands and/or fibers that are twisted, or otherwise interconnected to one another” and can comprise, for example, “a suture or a cable.” Ex. 1007 (Eller) at 15:61-16:6. The wire member “can have a cross-sectional configuration that is round, substantially round, rectangular, square, oval, and any other configuration considered suitable for a particular embodiment.” *Id.* at 15:65-16:2. Eller’s wire member is therefore a “filament” as disclosed and claimed in the ’011 patent because the wire member is at least a line, cord, ribbon, sheet, or flat wire. *See* Ex. 1001 (’011 patent) at 9:18-20 (disclosing that the filament can constitute “one or several threads, lines, cords, rope, ribbon, flat wire, sheet, or tape”).

91. Eller’s first wire member has a first end 124 attached to the housing 16 and a second end 126 attached to the actuator 18. Ex. 1007 (Eller) at 12:52-58. Eller discloses that first wire member extends from its first end attached to the housing 16 and “around a portion of the outer surface 121 of the sleeve 20” to the second end attached to the actuator 18. *Id.* at 12:58-64. Figure 21 below illustrates the arrangement of the wire member around the outer surface of the sleeve:

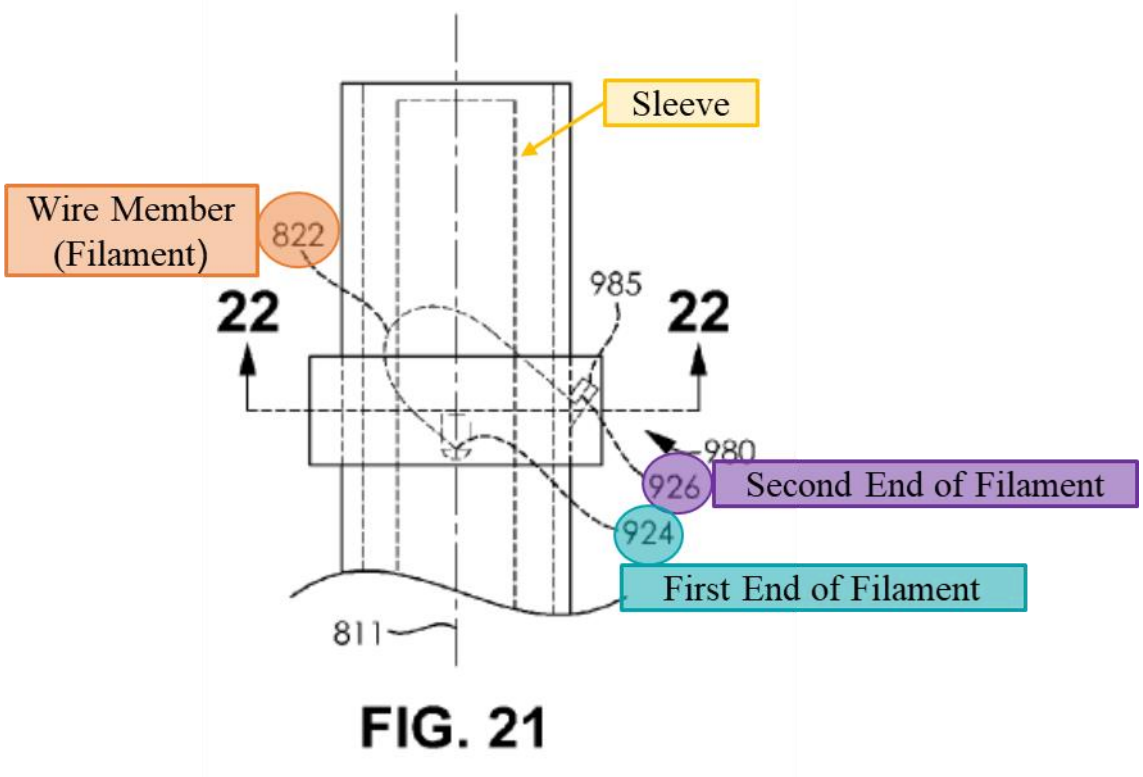

Id. at 24:50-57, Fig. 21.

92. Eller's valve is "movable between a first configuration and a second configuration." *Id.* at 15:21-25. Eller explains that in the first configuration, the wire member is in a relaxed state and fluid is permitted to flow through the sleeve. *Id.* at 15:21-40, 17:38-43. Then, when the actuator is rotated, the valve is moved to the second configuration where the actuator places the wire member in a tensioned state, causing the wire member to constrict the sleeve and prevent fluid from passing therethrough. *Id.* at 15:21-40, 17:62–67. Figures 10A through 10C illustrate the valve transitioning from the first relaxed position (10A) to the second constricted position (10C):

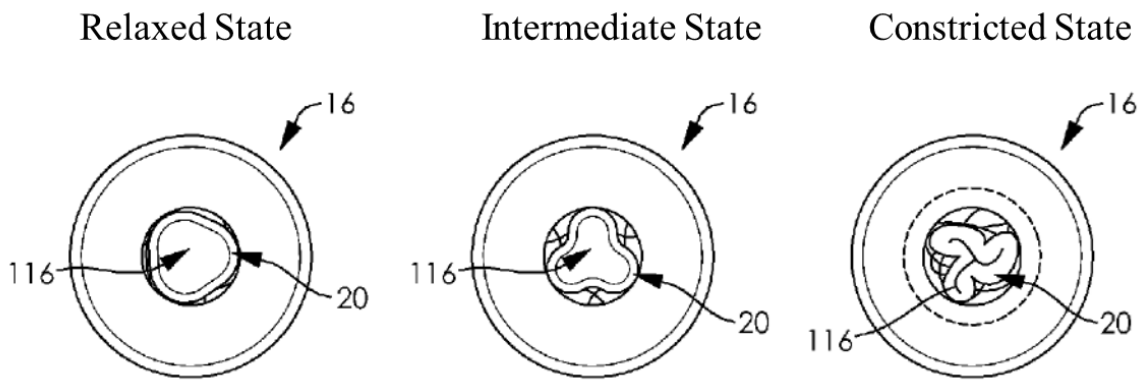

FIG. 10A FIG. 10B FIG. 10C

Id. at 15:21-40, Figs. 10A-10C. Eller also discloses that "when one or more medical devices are passed through the passageway 116 defined by the sleeve 20, the material that forms the sleeve 20 contacts a portion of one or more of the medical devices to close the passageway 116 such that fluid is prevented from passing through the passageway 116." *Id.* at 18:3-8.

93. A person of ordinary skill in the art would have been motivated to replace Schaffer's U-shaped actuating members with Eller's wire member for several reasons. First, a person of ordinary skill in the art would have been motivated by Eller's description that the wire member can form a seal around one or more medical devices passed through the valve to prevent fluid from leaking around the device. Ex. 1007 (Eller) at 15:21-40, 17:38-43, 18:3-8. A person of ordinary skill in the art would have also recognized that a stasis valve should seal and prevent leakage of fluid when a tool is inserted through the valve during a

procedure. Thus, Eller's ability to seal around such devices would have been beneficial to a person of ordinary skill.

94. Second, like I explained previously with respect to Hartley's string, a person of ordinary skill in the art would have recognized that Eller's wire member may provide more flexibility than Schaffer's metallic/plastic U-shaped actuating members when constricting the valve lumen. The flexibility of Eller's wire member would allow it to conform to a wider range of tools of varying diameters than Schaffer's U-shaped members. A person of ordinary skill in the art would have recognized that if a tool did not fit the size of Schaffer's U-shaped members, small gaps could form between the tool and the valve's lumen. However, a more compliant constricting mechanism, like Eller's wire member, could conform to the size and shape of a wider range of tools. Thus, Schaffer's valve combined with Eller's wire member could accommodate a wider range of tools/devices, which would have been a highly desirable feature to a person of ordinary skill in September 2017.

95. Third, the combination of Eller's wire member and Schaffer's valve would have merely entailed the substitution of one known element (Eller's wire member) for another (Schaffer's U-shaped actuating members) and would have yielded the predictable results of constricting the central lumen of Schaffer's valve to form a seal. I do not see any significant issues that would have prevented a

person of ordinary skill in the art from combining Eller's wire member with Schaffer's valve. The substitution would have been well within the level of ordinary skill in September 2017.

96. Fourth, as Schaffer recognizes, fluid stasis valves generally comprise "a resilient material in compression within a housing or clamping member." Ex. 1005 (Schaffer) at [0003]. As I explained previously with respect to the Schaffer-Hartley combination, there were a finite number of methods to compress the resilient material in a stasis valve in September 2017. Eller and Schaffer disclose two such methods – Eller's wire member and Schaffer's U-shaped actuating members. A person of ordinary skill in the art in September 2017 would have found it obvious to select either of these finite, predictable options. And as I explain below, they would have had a reasonable expectation of success in implementing them.

97. A person of ordinary skill in the art would have had reasonably expected success in substituting Eller's wire member for Schaffer's U-shaped actuating members for multiple reasons. First, Eller states that the "[a]ttachment between a wire member and a housing and/or actuator can be accomplished using any suitable method or technique, and skilled artisans will be able to select a suitable method or technique to attach a wire member to a housing and/or an actuator according to a particular embodiment based on various considerations,

including the material(s) that forms the wire member." Ex. 1007 (Eller) at 14:37-43. Eller then provides several exemplary ways to secure its wire member to an actuator, "including using adhesive, welding, fusing, providing a friction fit between the wire member and the … actuator, and any other method or technique considered suitable for a particular embodiment." *Id.* at 14:43-49. Eller's examples would have been common and predictable to a person of ordinary skill in the art in September 2017, and a person of ordinary skill would have reasonably expected success in securing Eller's wire member to Schaffer's actuator buttons using one or more of those methods. The demonstrative illustration that I provide below depicts a basic diagram of how this could be achieved. As shown, the first end of the wire member would be secured to the first actuator button (first actuator member), the wire member would loop at least once around the lumen of Schaffer's valve, and then the second end of the wire member would be secured to the second actuator button (second actuator member) on the opposite side of the valve:

Demonstrative Illustration
Schaffer + Eller's Wire Member

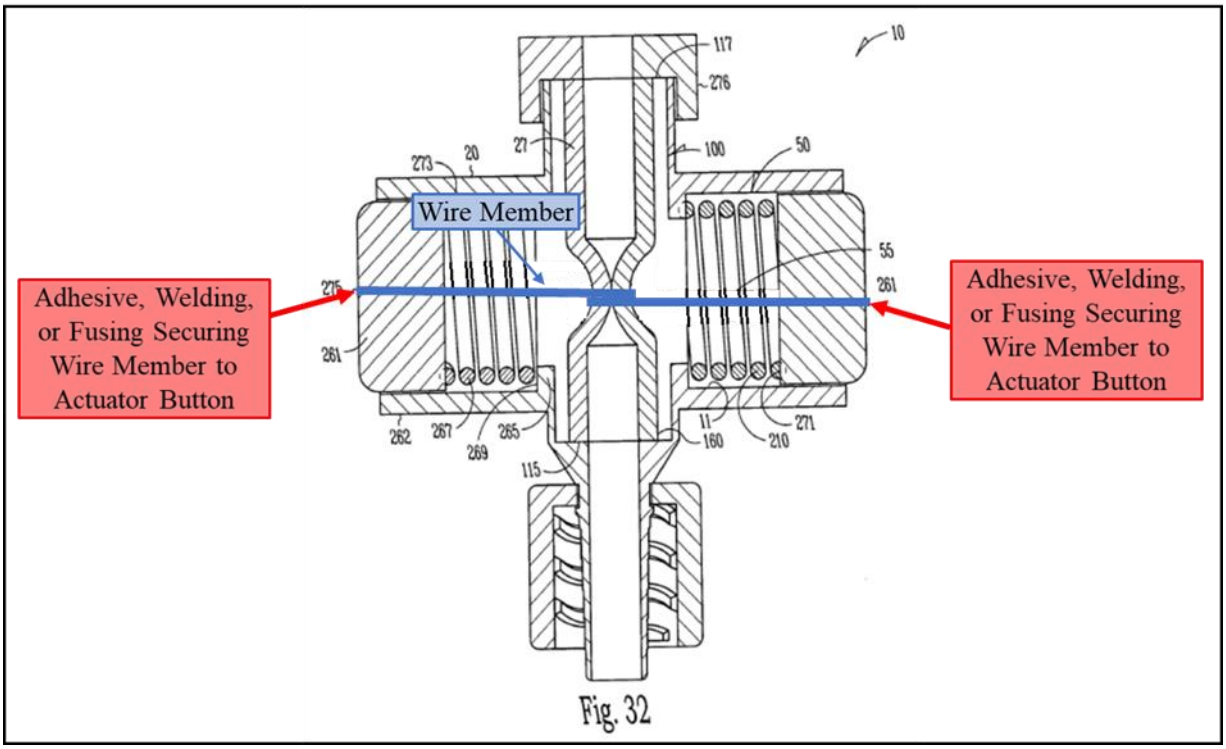

98. Second, Eller discloses that its wire member may be used with "any suitable actuator capable of moving the selective fluid barrier valve device between a first configuration and a second configuration" and that "[s]killed artisans will be able to select a suitable actuator to include on a selective fluid barrier valve device according to a particular embodiment based on various considerations, including the number of wire members included in the selective fluid barrier valve device and/or the structural arrangement of the housing." *Id.* at 8:27–39. Eller discloses that suitable actuators include "rotatable actuators, **linear actuators**, slidable actuators, pivotable actuators, levers, and any other actuator considered suitable for a particular embodiment." *Id.* at 8:39–44 (emphasis

added). A person of ordinary skill in the art would have understood that Schaffer's actuator is an example of a linear actuator. *See* Ex. 1005 (Schaffer) at [0076]-[0077]. Thus, Eller's disclosure regarding the wide range of actuators suitable for use with its wire member would have reinforced the person of ordinary skill in the art's reasonable expectation that Eller's wire member could be successfully combined with Schaffer's actuator buttons.

99. Third, a person of ordinary skill in the art would have recognized that Eller's wire member and Schaffer's U-shaped actuating members use similar mechanisms to compress and seal the central lumen of the valve. Eller's wire member seals the valve when the actuator is placed in the second position, which creates tension in the wire member and causes the wire member to constrict the sleeve, as illustrated in Figures 10A-10C below:

Relaxed State

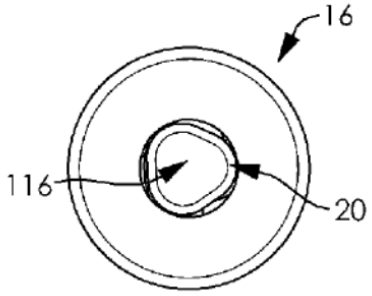

FIG. 10A

Intermediate State

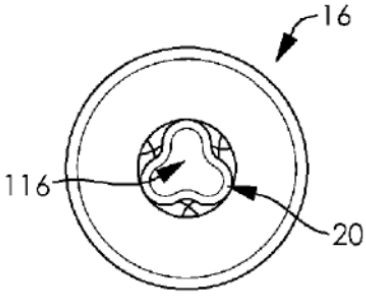

FIG. 10B

Constricted State

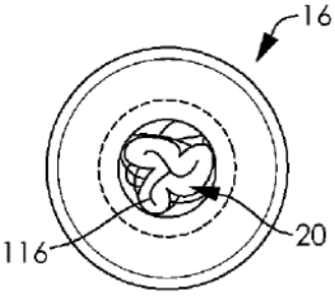

FIG. 10C

Ex. 1007 (Eller) at 15:21-40, 17:47-18:3, Figs. 10A-10C. Schaffer's U-shaped actuating members seal the central lumen when the U-shaped actuating members constrict and collapse the containment structure, as illustrated in Figure 32:

Constricted State

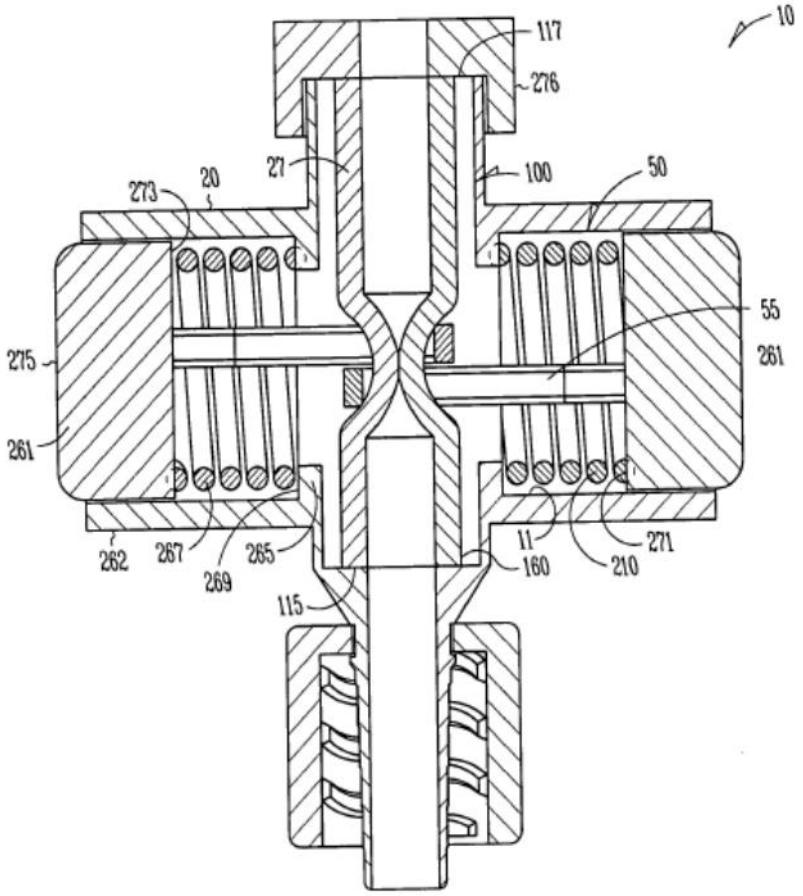

Fig. 32

Ex. 1005 (Schaffer) at [0077], Fig. 32. Thus, both Eller and Schaffer seal the central lumen of the valve by causing the wire/actuating members to constrict and compress the central lumen of the valve. *See* Ex. 1005 (Schaffer) at [0077]; Ex. 1007 (Eller) at 15:21-40, 17:47-18:3.

100. In view of the similarities between Eller and Schaffer's valves, a person of ordinary skill in the art would have expected that Eller's wire member would serve as a reasonable, if not superior, substitute for the U-shaped actuating members. For example, in a first position Schaffer's undepressed actuator buttons would pull the wire member in opposing directions, placing tension on the wire member. *See* Ex. 1005 (Schaffer) at [0077]; Ex. 1007 (Eller) at 15:21-40, 17:47-18:3. This would cause the string to constrict and collapse the lumen of Schaffer's containment structure, sealing the valve. Then, when Schaffer's actuator buttons are depressed and moved to the second position, the compressive forces from the springs would be relaxed, relieving the tension on the wire member, and causing the wire member to loosen around the central lumen so that the lumen least partially opens. *See* Ex. 1005 (Schaffer) at [0077]; Ex. 1007 (Eller) at 15:21-40, 17:47-18:3. Schaffer discloses that the seal module is formed from a "highly deformable, non-compressible material 166 (e.g., plastic)" and is "configured to maintain an open lumen 193 when no compressive force 67 is applied." (Ex. 1005, [0054].) A person of ordinary skill in the art would have therefore expected that Schaffer's lumen would have the resilience to return to open configuration when the actuator buttons are pressed inwardly, and the tension on the wire member is released such that "no compressive force [] is applied" to the lumen." (*Id.*) Further, as I explained with respect to the Schaffer-

Hartley ground, if the resiliency of Schaffer's lumen required adjustment to function with Eller's wire, a person of ordinary skill in the art would have possessed the skills and knowledge to select an appropriate material with the proper resiliency. (*Supra* §VI.A.3.b.ii.) These similarities between Eller's wire member and Schaffer's U-shaped actuating members would have reinforced a person of ordinary skill in the art's reasonable expectation that Eller's wire member could be successfully implemented in Schaffer's valve.

4. <u>Biasing System</u>

101. Claim 1 finally recites: "a biasing system configured to bias the first member and the second member to the first position." Schaffer discloses this limitation.

102. Schaffer's stasis valve includes "two resilient members 267 (e.g., spring 210) disposed within the actuating member 55":

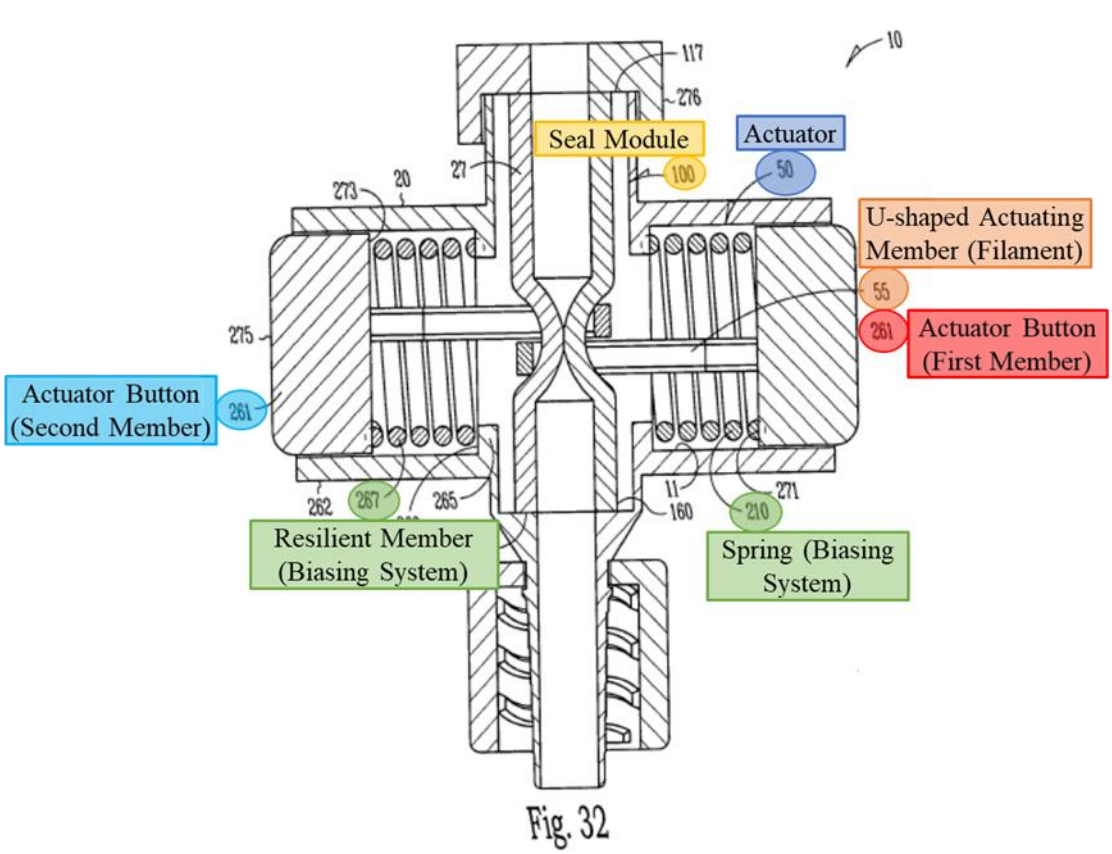

Fig. 32

Ex. 1005 (Schaffer) at [0077], Fig. 31. Schaffer's resilient members/springs are a "biasing system configured to bias the first member and the second member to the first position."

103. Schaffer's springs bias the actuator buttons (i.e., the first and second members of the actuator) toward the first (i.e., sealed) position by imposing a force on the actuator buttons when the buttons are undepressed. *Id.* at [0077]. The force supplied by the springs cause the actuating members coupled to the buttons to collapse and seal the seal module, preventing the flow of fluid through

the valve. *Id.* The system remains biased towards this sealed stated until the actuator buttons are depressed, which relieves the force applied by the springs:

First Position Actuator Buttons Undepressed	Second Position Actuator Buttons Depressed
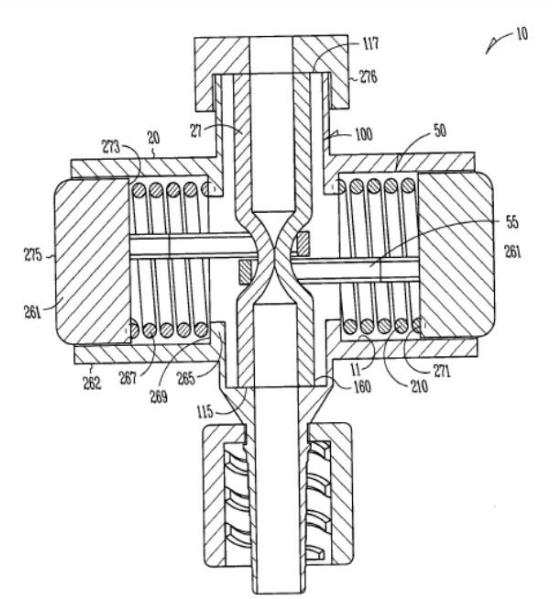 Fig. 32	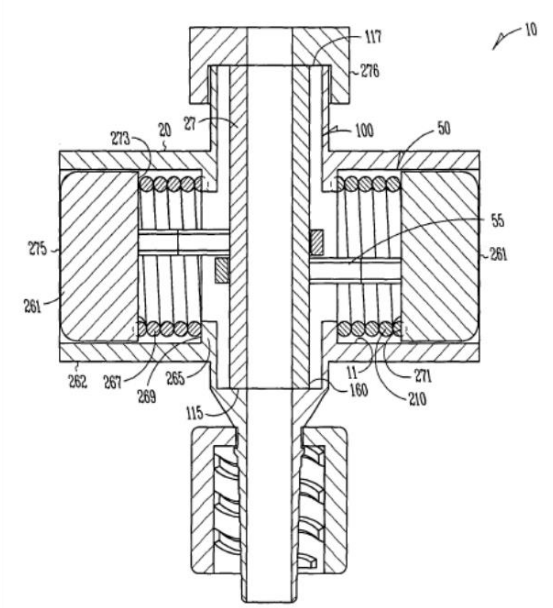 Fig. 34

Id. at [0077], Figs. 32, 34.

B. <u>Claim 2</u>

104. Claim 2 recites: "The valve of claim 1 wherein the tubular member is pliable." Schaffer discloses the additional limitations in Claim 2, and therefore, Schaffer anticipates Claim 2 or renders it obvious alone or in combination with Hartley ***or*** Eller.

105. Schaffer discloses that the seal module 100 (i.e., the tubular member) "includes a flexible, elongate tubular structure 101 having an outer wall 27 which

includes a material 166 that is highly elastic, deformable, compliant and yet virtually non-compressible." Ex. 1005 (Schaffer) [0054]. A "highly elastic, deformable, [and] compliant" material would be pliable. Thus, Schaffer's tubular member is pliable.

C. Claim 3

106. Claim 3 recites: "The valve of claim 1 wherein the first portion of the filament extends in a loop completely around the tubular member." Schaffer, Hartley, and Eller each disclose the additional limitations recited in Claim 3, and therefore, Schaffer anticipates Claim 3 or renders it obvious alone or in combination with Hartley ***or*** Eller.

1. Schaffer

107. Schaffer discloses that the actuating members are "at least partially circumferencially [sic] disposed about the portion 108 of the seal module 100." Ex. 1005 (Schaffer) at [0076]. As shown in Figure 31 below, the actuating members collectively encircle the seal module 100 to form a loop thereabout:

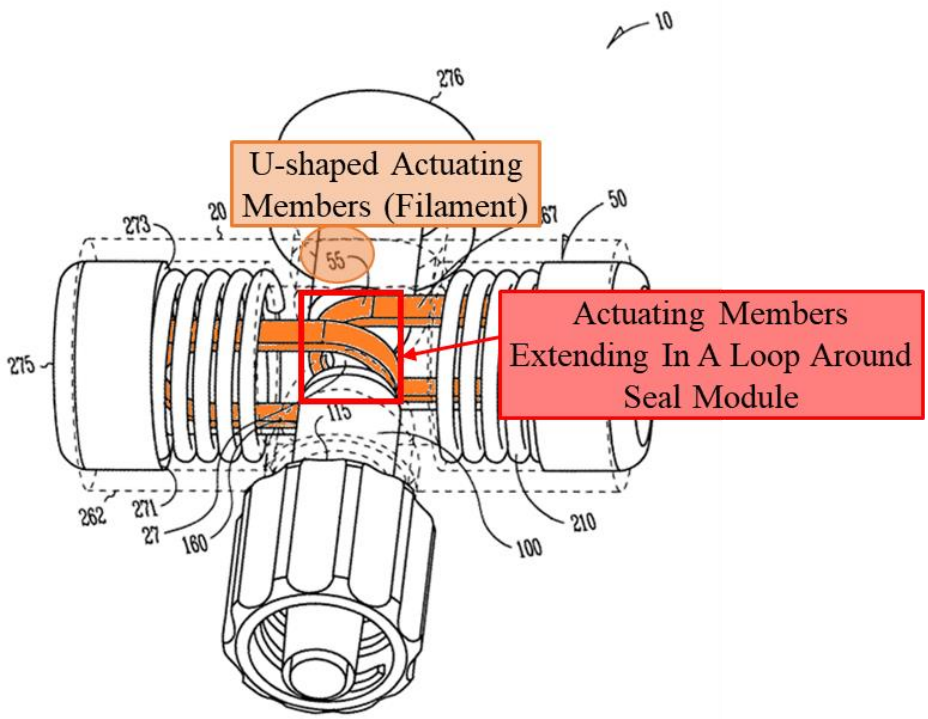

Fig. 31

Id. at Fig. 31. The graphic below illustrates how Schaffer's U-shaped actuating members form a loop around the lumen:

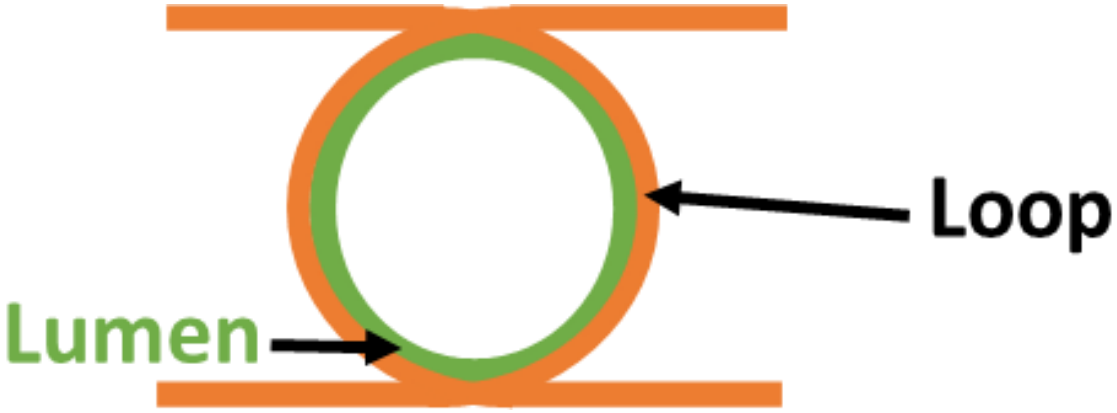

108. This arrangement is similar to the arrangement of the filament depicted in Figures 8 and 9 of the '011 patent:

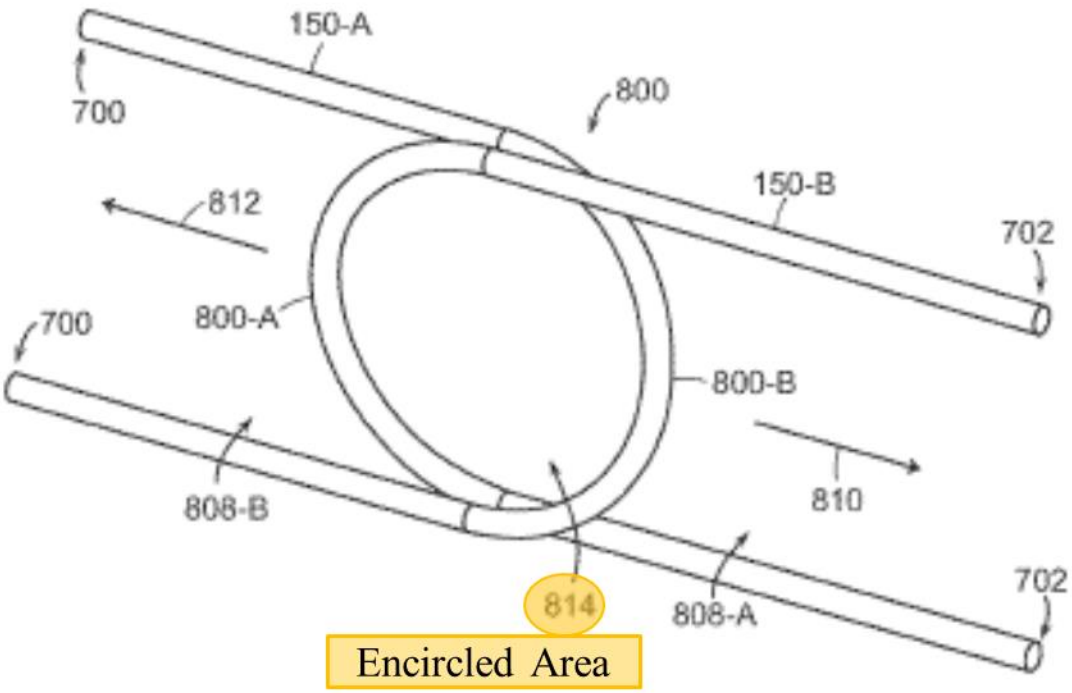

FIG. 8

Ex. 1001 ('011 patent) at Figs. 8-9. The '011 patent explains that this configuration forms "an encircled area 814, also referred to herein as a constricting area 814" and that the "elongate member 132 can be received within the encircled area 814." *Id.* at 14:2-7. Thus, the "encircled area" forms a loop around the elongate member 132. Schaffer's actuating members form a similar loop.

2. <u>Hartley</u>

109. Hartley discloses that its string "is wound preferably twice around the cylindrical diaphragm" as shown in Figure 3 below:

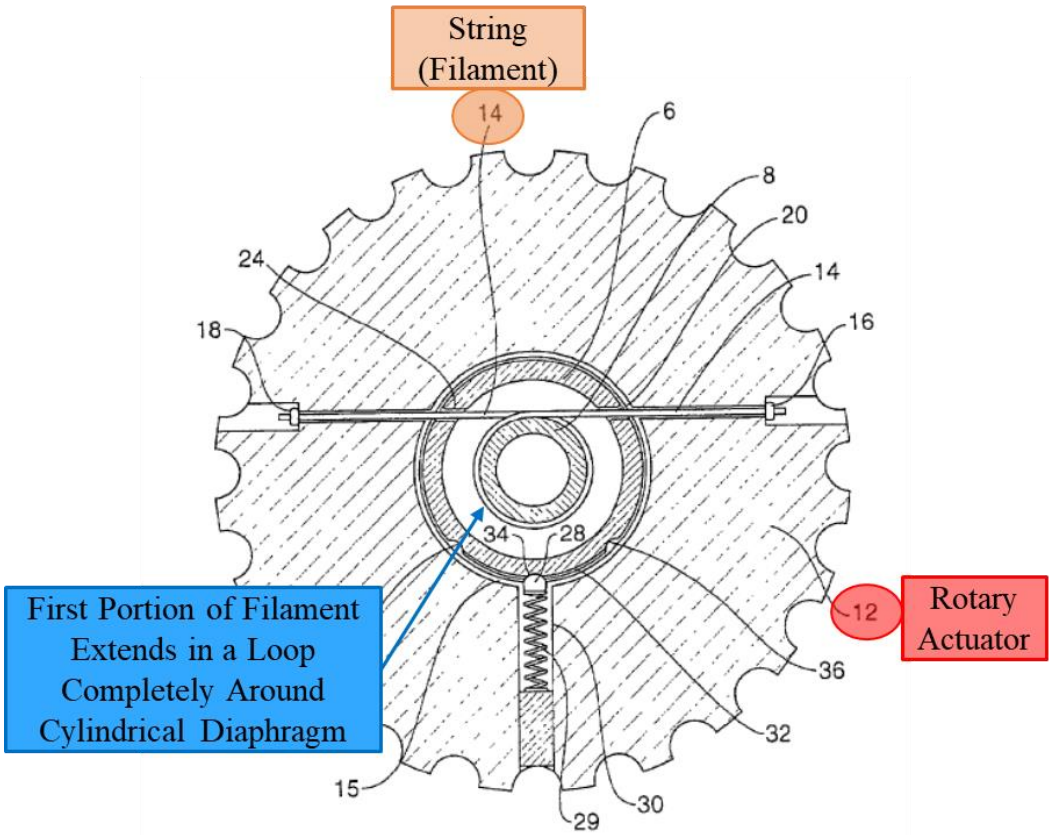

Fig 3

Ex. 1006 (Hartley) at [0031], Fig. 3. Hartley's string therefore includes a first portion that "extends in a loop completely around the tubular member." *Id.*

110. A person of ordinary skill in the art would have been motivated to wind Hartley's string around Schaffer's tubular member when replacing Schaffer's U-shaped actuating members with Hartley's string. Hartley discloses that winding the string around the tubular member is the preferred configuration for its string and that such a configuration "will close over a range of diameters of devices passed through the valve or can close completely down to be self sealing." Ex. 1006 (Hartley) [0031], [0037]. This description of the benefits of the

configuration would have motivated a person of ordinary skill in the art to use the same configuration when implementing Hartley's string in Schaffer's valve.

111. A person of ordinary skill in the art would have reasonably expected success in winding Hartley's string around Schaffer's tubular member. As I explained in Claim 1 above, the mechanism of action of Schaffer's and Hartley's valves are similar. Basically, the valves are designed to pull the ends of the filaments to close the valve. The buttons/springs in Schaffer's valve would both pull the ends of Hartley's string in opposite directions to tighten the string around the tubular member. A person of ordinary skill in the art would have possessed the necessary skills to adjust the spring force and/or the resilience of the seal module so that Schaffer's valve operated effectively with Hartley's string.

3. <u>Eller</u>

112. Eller discloses that some versions of its valve "can include a single wire member that is disposed around more than 75% of the outer surface of the sleeve or that is disposed around more than 100% of the outer surface of the sleeve. For example, the wire member can be positioned such that it extends at least one full revolution around the outer surface of the sleeve." Ex. 1007 (Eller) at 22:18-24. In a configuration where the wire member is "positioned such that it extends at least one full rotation around the outer surface of the sleeve," the wire

member includes a first portion that "extends in a loop completely around the tubular member." *Id.*

113. A person of ordinary skill in the art would have been motivated to use the looped configuration for Eller's wire member when replacing Schaffer's U-shaped actuating members with Eller's wire member. A person of ordinary skill in the art would have recognized that looping the wire member around the entire circumference of Schaffer's seal module would maximize the constrictive seal of the wire member around Schaffer's seal module and any tools inserted therethrough because it would ensure that the entire outer circumference of tools would be constricted against the seal module, eliminating any gaps that might otherwise exist.

114. A person of ordinary skill in the art would have reasonably expected success in looping Eller's wire member around Schaffer's seal module much for the same reasons the person would have expected success looping Hartley's string around Schaffer's seal module. The mechanisms of action are similar between Schaffer and Eller – namely, pulling the ends of the filament in opposite directions to close the tubular member. A person of ordinary skill in the art would have expected Eller's wire member to close around the seal module when Schaffer's springs exert force on the wire member.

D. <u>Claim 4</u>

115. Claim 4 recites: "The valve of claim 1 wherein the first member of the actuator comprises a first button and the second member of the actuator comprises a second button, wherein the first button and the second button are undepressed in the first position, and wherein the first button and the second button are depressed in the second position." Schaffer discloses the additional limitations recited in Claim 4, and therefore, Schaffer anticipates Claim 4 or renders it obvious alone or in combination with Hartley ***or*** Eller.

116. As I explained for Claim 1 previously, Schaffer's valve includes two spring-loaded actuator buttons 261 that are "movable from a first position to a second position on opposing sides of the housing":

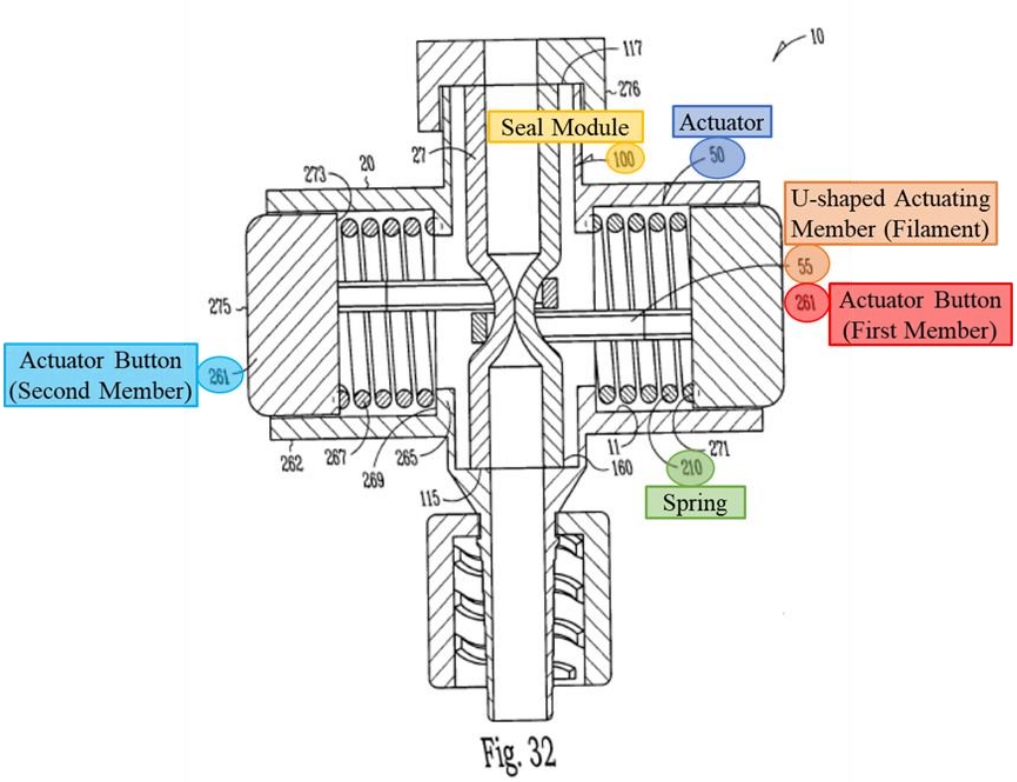

Ex. 1005 (Schaffer) at [0075]-[0076], Figs. 31-32. Schaffer discloses that the actuator buttons are undepressed when the valve is in the first (closed) position, shown in figure 32 below, and are depressed when the valve is in the second (open) position, shown in Figure 34 below:

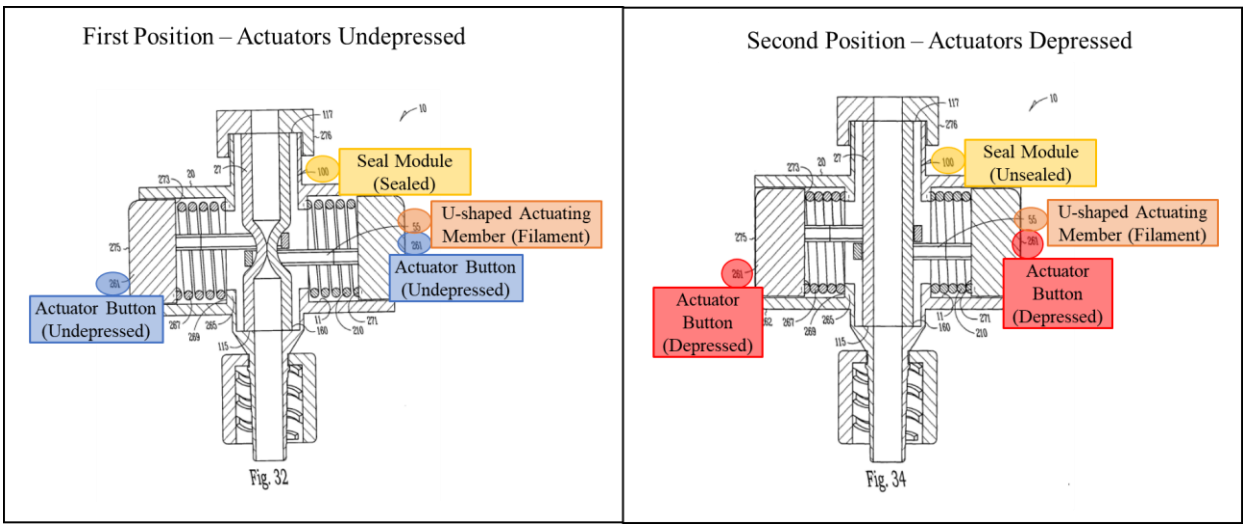

Id., [0077], Figs. 32, 34. This is the same configuration disclosed for the first position and second position of the hemostasis valve in the ’011 patent:

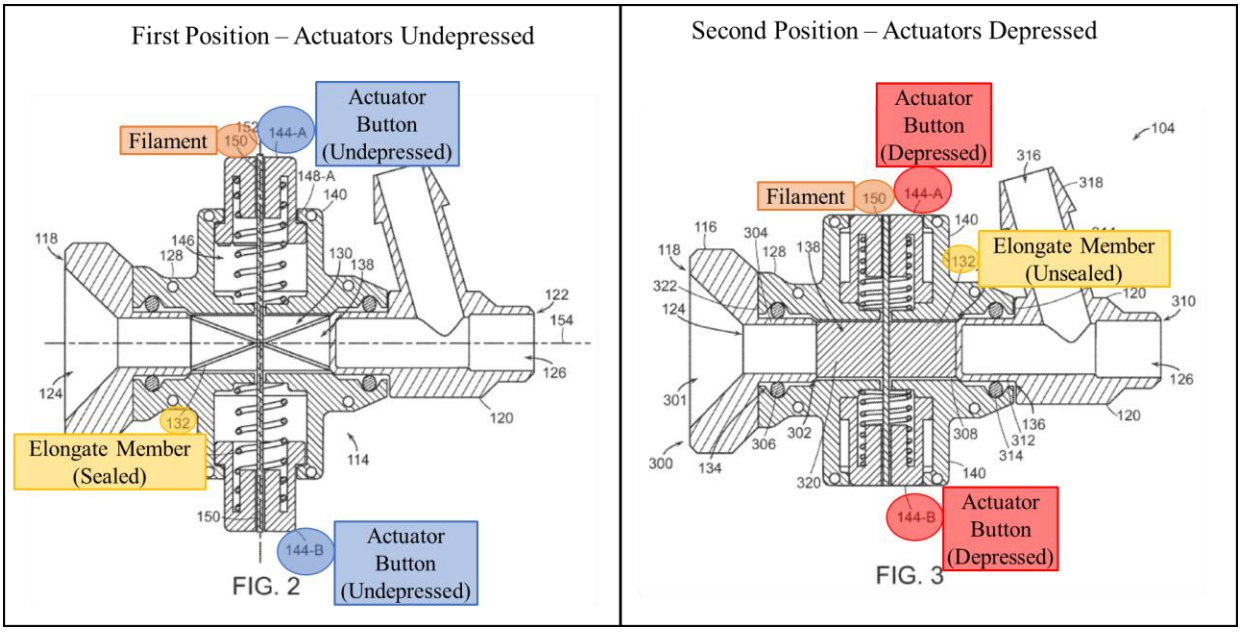

Ex. 1001, Figs. 2-3.

E. <u>Claim 5</u>

117. Claim 5 recites: “The valve of claim 1, when the first member and the second member of the actuator are in the first position, the lumen of the tubular member is configured to remain constricted and sealed when a pressure differential exists between (a) a first volume outside the lumen and adjacent to a first end of the tubular member and (b) a second volume outside the central lumen and adjacent to a second end of the tubular member.” Schaffer anticipates Claim 5 or renders it obvious alone or in combination with Hartley ***or*** Eller.

118. As an initial matter, I note that Claim 5 merely requires that the valve is configured to remain sealed when "a pressure differential exists" between a volume outside the first end of the tubular member and a volume outside the second end of the tubular member. In other words, Claim 5 encompasses ***any*** level of pressure differential between the first and second ends of the tubular member. A person of ordinary skill in the art would have recognized that such a pressure differential would necessarily exist between the outside of the first end of a catheter and the second end the catheter during any procedure where the catheter is inserted into a patient's vasculature. That is because the patient's blood pressure is higher than the air pressure outside of the patient's body. Indeed, the difference in pressure is the primary reason that hemostasis valves are necessary to prevent the patient's blood from leaking through the catheter once it is inserted into the vasculature. Accordingly, a person of ordinary skill in the art would have understood that any hemostasis valve for intravascular procedures must remain constricted and sealed when such a pressure difference exists. Notably, Schaffer, Hartley, and Eller all disclose that their hemostasis valves are intended for intravascular procedures, as I explain below.

1. <u>Schaffer</u>

119. Schaffer's discloses that its patent application relates to "a composite fluid-stasis valve for use with catheters" such as the catheters disclosed in U.S.

Patent No. 5,429,616 ("Schaffer '616") which Schaffer incorporates by reference. Ex. 1005 (Schaffer) at [0002]. Schaffer '616 discloses "catheters for venous or arterial cannulation, which are inserted into a blood vessel." Ex 1009 (Schaffer 616) at 1:1-9; *see also id.* at Abstract. Thus, Schaffer's hemostasis valve is intended for use with catheters inserted into a patient's blood vessels and "blocks the flow of gas or fluid completely and immediately with or without an instrument in place within the gas/fluid path" during those procedures. Ex. 1005 (Schaffer) [0008]. A person of ordinary skill in the art would have recognized that for Schaffer's valve to fulfill its purpose, the valve remains sealed when a pressure differential exists between the first end (i.e., adjacent the proximal end of a catheter inserted into the patient and subject to intravascular pressure) and second end (i.e., subject to air pressure) of the tubular member.

Second End Subject to Air Pressure

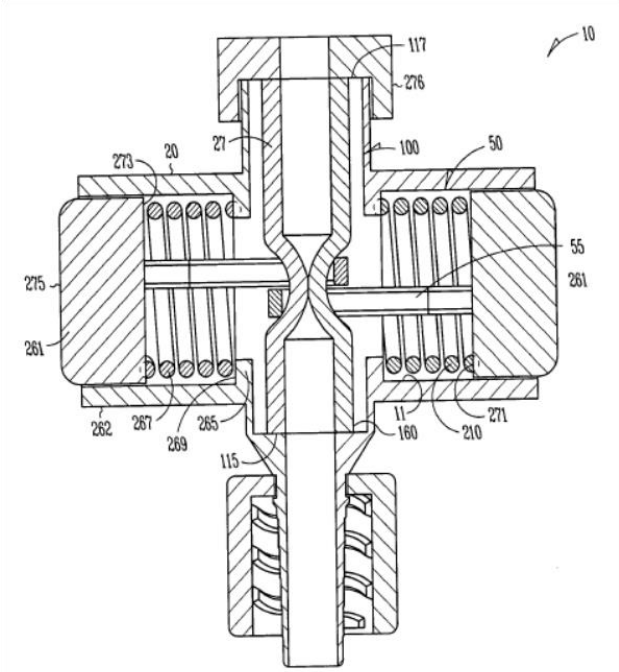

Fig. 32

First End Subject to Blood Pressure

Id. at [0075], Fig. 32; *supra* ¶118.

120. Schaffer also discloses that when the actuator buttons are undepressed (i.e., in the first position), "the actuating members 55 of the actuators 50 are, in one option, disposed and at least partially circumferencially [sic] disposed about the portion 108 of the seal module 100 depressing and at least partially collapsing a portion 108 of the containment structure 160 by a compressive force 67 (e.g. by a spring 210)" so that the "lumen 193 of the third seal member 165 is at least partially collapsed by the compressive force 67":

First Position – Actuator Buttons Undepressed

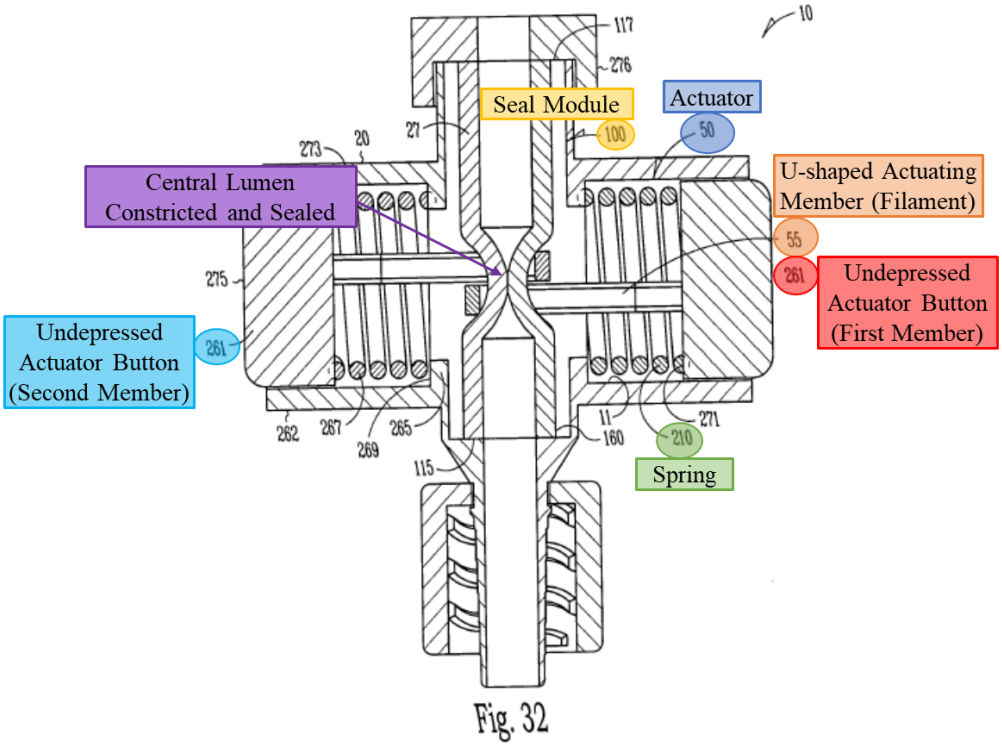

Ex. 1005 (Schaffer) at [0077], Figs. 31-32. Thus, in the first position, Schaffer's valve is compressed to form a seal that prevents fluid or gas from passing through the valve. Schaffer then discloses that the valve is unsealed when the actuator buttons are depressed into the second position, which disengages the actuating members from the tubular member:

Second Position – Actuator Buttons Depressed

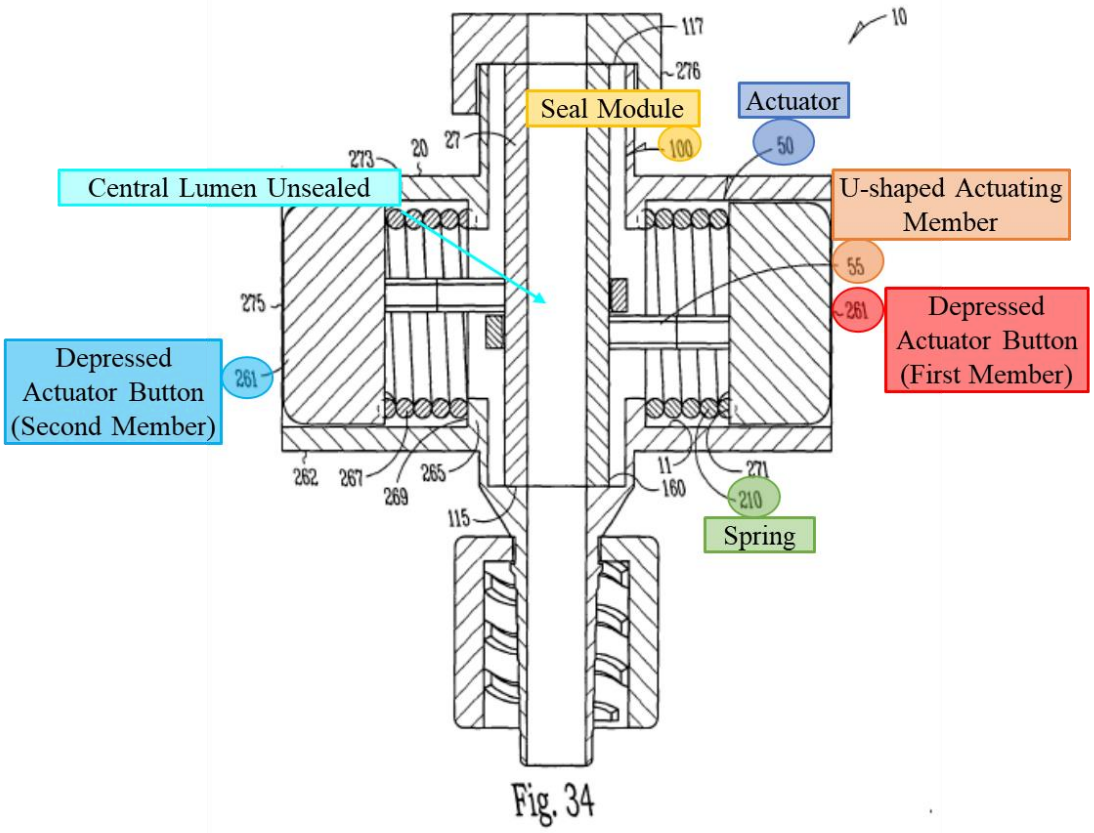

Fig. 34

Id. at [0077], Figs. 33-34.

121. Accordingly, a person of ordinary skill in the art would have recognized that Schaffer's valve is configured to remain sealed so long as the actuator buttons are in the first, undepressed position. That would have included situations where a pressure differential existed between the distal and proximal ends of the lumen, such as during an intravascular procedure. Schaffer's disclosure that its valve is intended to "block[] the flow of gas or fluid completely and immediately" during intravascular procedures confirms that understanding, as

do Schaffer's descriptions on the sealed state of the valve when the actuator buttons are in the first (undepressed) position. *Id.* at [0008], [0077].

122. Moreover, if a person of ordinary skill in the art found that Schaffer's valve did not maintain its seal when a pressure differential existed, the person of ordinary skill would have found it obvious to adjust Schaffer's valve to ensure that it could maintain a seal in the presence of a pressure differential – after all, maintaining a seal in such conditions is the purpose of a hemostasis valve. For example, the person of ordinary skill in the art had several simple options to adjust the seal, including adjusting Schaffer's spring strength to apply additional force to seal the valve, adjusting the resilience and compressibility of the seal module that forms the valve's lumen, or adjusting the shape, flexibility, and/or dimensions of the U-shaped actuating members to more closely conform to the shape of the seal module and any tool(s) inserted through the valve. A person of ordinary skill in the art would have been motivated to do so because the purpose of Schaffer's hemostasis valve is to prevent leakage when a catheter or medical device is inserted into a patient, which would necessarily involve a pressure differential. A person of ordinary skill in the art would have reasonably expected success in adjusting the spring strength to exert more tension on the filament by, for example, changing the spring material or adjusting the springs coils. Springs are simple, predictable mechanical devices that would have been well understood by a

person of ordinary skill in the art in September 2017. As I explained previously, a person of ordinary skill in the art would have reasonably expected success in selecting an appropriate material for the valve lumen in view of the range of suitable lumen materials disclosed in the prior art. *Supra* ¶88. As I also explained previously, a person of ordinary skill in the art would have reasonably expected success in adjusting the size, shape, and/or dimensions of Schaffer's U-shaped actuating members to increase their flexibility and improve the seal around the cylindrical seal module. *Supra* ¶75.

2. <u>Schaffer and Hartley</u>

123. A person of ordinary skill in the art would have reasonably expected that Schaffer's valve would be configured to maintain its sealed state in the presence of a pressure differential when the U-shaped actuating members are replaced with Hartley's string. Like Schaffer, Hartley's valve is intended for use during intravascular procedures, where such a pressure differential will necessarily exist. Hartley explains that its valve is intended to "permit[] [a] catheter or other instrument to be passed through the access valve and the valve to form a seal against the walls of the catheter or other instrument to prevent loss of blood or other fluid." Ex. 1006 (Hartley) [0003]. To do so, Hartley's valve must be configured to maintain the seal in the presence of a pressure differential. *Supra* ¶118. Hartley also discloses that "[d]epending on how much the flexible member

[i.e., string] is pulled radially and/or tangentially the cylindrical diaphragm can be completely constricted to prevent fluid flow through the valve or can be constricted to the extent that it closes around an instrument, for instance a catheter, passed through the valve." Ex. 1006 (Hartley) at [0006].

124. In view of Hartley's disclosures and Schaffer's disclosures that I discussed in the preceding section, a person of ordinary skill in the art would have reasonably expected that Hartley's string would constrict and seal the lumen of Schaffer's stasis valve during an intravascular procedure. Accordingly, a person of ordinary skill in the art would have reasonably expected that Hartley's string would maintain Schaffer's tubular member in a constricted and sealed state when Schaffer's actuator buttons are in the first, undepressed position, even when a pressure differential exists between the proximal and distal ends of the lumen.

125. In addition, to the extent Schaffer's valve and Hartley's string did not maintain its seal when a pressure differential existed, a person of ordinary skill in the art would have found it obvious to adjust Schaffer's spring strength to apply additional force to seal the valve, adjust the resilience of Schaffer's lumen, and/or adjust Hartley's string to improve the sealing of the valve for the reasons I explained previously with respect to Schaffer. *Supra* §VI.E.1.

3. <u>Schaffer and Eller</u>

126. A person of ordinary skill in the art would have reasonably expected that Schaffer's valve would be configured to maintain its sealed state in the presence of a pressure differential when the U-shaped actuating members are replaced with Eller's wire member. Like Schaffer's valve, Eller's hemostasis valve is intended for use in procedures "that require the percutaneous insertion of one or more interventional devices into a bodily passage, such as a portion of the vascular system." Ex. 1007 (Eller) at 1:20-23. Eller's valve is designed to prevent the flow of fluid through the central sleeve when the actuator is in the second (closed) position, causing the wire member to constrict the sleeve and create a seal. *Id.* at Abstract, 12:14-17, 15:21-40, 17:47-18:8, Figs. 10A-10C. Thus, a person of ordinary skill in the art would have recognized that Eller's valve is configured to remain sealed when placed in the second (closed) position during an intravascular procedure, when a pressure differential would exist between the first and second ends of the lumen.

127. Eller also describes a quantitative analysis performed on different versions of its valve having six different sleeve materials "included in a selective fluid barrier valve device that was constructed to be similar to the embodiment illustrated in" Figures 1-10C. *Id.* at 36:46-53. Eller explains that the valves were "attached to a gravity flow rig and pressurized for 30 seconds per test at a pressure

of 2.9 PSI +/- 0.1 PSI (e.g., systolic pressure)" and were measured for fluid leak "in the second configuration with no device disposed through the sleeve passageway and with the devices described in the table disposed through the sleeve passageway." *Id.* at 36:53-60. A person of ordinary skill in the art would have understood that Eller's described test setup would have created a pressure differential between the first and second ends of the valve's lumen.

128. Eller discloses the results of the testing in the following table:

Material of Sleeve	Empty Sleeve Passageway	0.018"Wire disposed within sleeve passageway	0.035" Wire disposed within sleeve passageway	14 French dilator disposed within sleeve passageway	Rating:
80% - 4755 20% - 4765	3 g	5.4 g	50 g	4.9 g	+
100% - 4755	14.3 g	2.8 g	25.4 g	11 g	+
90% - 4755 10% - 4014	0	0	1.4 g	0	++
80% - 4755 20% - 4014	0	0	0	0	++++
70% - 4755 30% - 4014	0	0	0	0	++++
60% - 4755 40% - 4014	0	0	Trace	0	+++

Id. at 36:26-44. As reported in the table above, two of the six valves demonstrated no leaks regardless of the tool inserted through the valve, and one of the six devices demonstrated only trace leakage when a 0.035" wire was placed within the passageway. *Id.* at 36:64-37:3. Moreover, four of the valves reported no leaks when the sleeve passageway was empty, filled with a .018" wire, and filled with a 14 French dilator. These test results confirm that Eller's wire member is suitable

for constricting and sealing the lumen of a stasis valve, even when a pressure differential exists between the proximal and distal ends of the lumen.

129. In view of Eller's disclosures and Schaffer's disclosures that I discussed previously, a person of ordinary skill in the art would have reasonably expected that Eller's wire member would constrict and seal the lumen of Schaffer's stasis valve during an intravascular procedure. Accordingly, a person of ordinary skill in the art would have reasonably expected that Eller's wire member would maintain Schaffer's tubular member in a constricted and sealed state when Schaffer's actuator buttons are in the first, undepressed position, even when a pressure differential exists between the proximal and distal ends of the lumen, with or without devices inserted through the valve.

130. In addition, to the extent Schaffer's valve and Eller's wire member do not maintain a seal when a pressure differential exists, a person of ordinary skill in the art would have found it obvious to adjust Schaffer's spring strength to apply additional force to seal the valve, adjust the resilience of Schaffer's lumen, and/or adjust Eller's wire member to improve the sealing of the valve for the reasons I explained previously with respect to Schaffer. *Supra* §VI.E.1.

F. <u>Claim 6</u>

131. Claim 6 recites: "The valve of claim 1, wherein when the first member and the second member of the actuator are in the first position, the lumen

of the tubular member is configured to remain constricted and sealed when vacuum pressure is applied to a volume outside the lumen and adjacent to either a first end or a second end of the tubular member." Schaffer anticipates Claim 6 or renders it obvious alone or in combination with Hartley ***or*** Eller.

132. As I explained previously for Claim 5, Schaffer, Hartley, and Eller all disclose hemostasis valves that create a seal to prevent the leakage of blood or fluid during intravascular medical procedures. *Supra* §VI.E. In September 2017, persons of ordinary skill in the art would have recognized that many intravascular medical procedures involved the use of vacuum pressure to provide suction or aspiration. For example, aspiration catheters were commonly used to apply aspiration at a target location, and it was common to use hemostasis valves with such catheters. Garrison, for example, discloses an arterial catheter system that can include an access sheath 220, a hemostasis valve 226, and a flow line 905 that may "be connected to an aspiration source such as a pump or syringe":

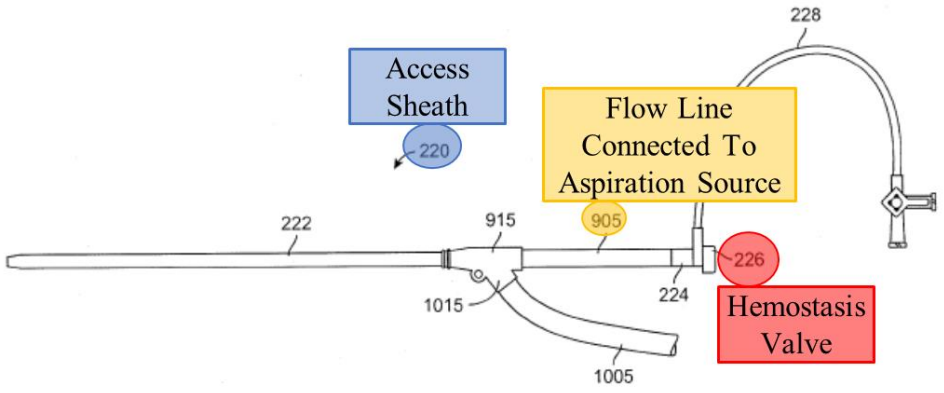

FIG. 11

Ex. 1011 (Garrison) at [0071]-[0072], Fig. 11; *see also id.* at [0130]-[0142].

133. I do not see anything about the design of Schaffer's valve that would lead a person of ordinary skill in the art to believe the valve would open when exposed to negative pressure or be otherwise unsuitable for use with a device that creates vacuum pressure, such as an aspiration catheter. Schaffer's U-shaped actuating members are pulled perpendicular to the lumen of the catheter with the springs. The suction force from the aspiration catheter would not be applied in the correct direction to move the U-shaped actuating members but may, in fact, help to pull the valve inward and even increase the strength of the seal. Thus, Schaffer's valve is configured to remain constricted and sealed when vacuum pressure is applied to a volume outside the lumen and adjacent to either a first end or a second end of the tubular member.

134. In addition, the only description I see in the ’011 patent regarding the valve’s ability to seal in the presence of vacuum pressure is the following statement: “due to the narrowing shape of the elongate member 132 when the constricting mechanism 141 is in the first configuration, a vacuum applied to the portions of the delivery device 100 distal to the axis 152 draws the elongate member 132 towards the first configuration and can, in some embodiments, increase the strength, robustness, and/or strength of the seal of the valve 104.” Ex. 1001 (’011 patent) at 10:53-59. Notably, Schaffer’s elongate member (i.e., the seal module 100) also has a “narrowing shape” when the actuator buttons are in the first, undepressed configuration:

’011 Patent

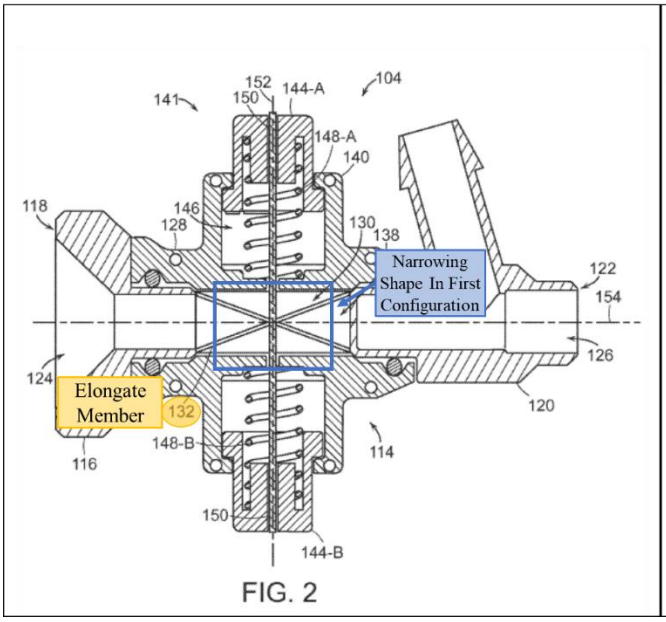

Schaffer

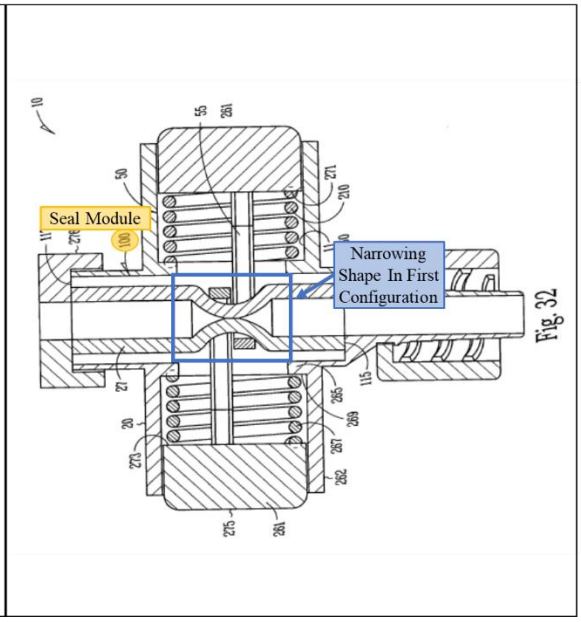

Id. at Fig. 2 (left); Ex. 1005 (Schaffer) at [0077], Fig. 32 (right). Thus Schaffer’s valve has the same structure, features, and function as those that the ’011 patent

describes as enabling the valve to seal in the presence of vacuum pressure. A person of ordinary skill in the art would have expected the narrowing shape of Schaffer's lumen to further seal in the face of negative pressure, just as the '011 patent describes.

135. In addition, for similar reasons as I explained above and for Claim 5, a person of ordinary skill in the art would also have reasonably expected that Hartley's string or Eller's wire member would maintain Schaffer's tubular member in a constricted and sealed state when Schaffer's actuator buttons are in the first, undepressed position, even when a vacuum pressure is applied to a volume outside of the valve's lumen. Ex. 1005 (Schaffer) at [0008], [0077]; Ex. 1006 (Hartley) at [0003], [0006]; Ex. 1007 (Eller) at 27:44-50, 36:46-37:3. Again, Schaffer's buttons/springs pull the strings/wire members perpendicular to the forces caused by any vacuum pressure and may, in fact, help to pull the valve inward and even increase the strength of the seal.

136. To the extent Schaffer's valve did not maintain its seal under vacuum pressure (either with the U-shaped members, or the string/wire member), a person of ordinary skill in the art would have found it obvious to adjust Schaffer's valve to ensure that it could maintain a seal in the presence of vacuum pressure. For example, the person of ordinary skill in the art could have made one or more simple adjustments to Schaffer's valve to maintain the seal, including adjusting

the spring strength to apply additional force to seal the valve, adjusting the resilience and compressibility of the seal module that forms the valve's lumen, and/or adjusting the shape, flexibility, and/or dimensions of the U-shaped actuating members to more closely conform to the shape of the seal module and any tool(s) inserted through the valve. A person of ordinary skill in the art would have been motivated to do so because the purpose of Schaffer's hemostasis valve is to prevent leakage when other devices, or no devices, are inserted, and whether the valve is exposed to positive pressure or vacuum pressure. Adjusting the spring strength would have been a simple modification that could have been accomplished by, for example, selecting a spring made of different materials or with tighter windings. The selection of springs would have been something commonly done by persons of ordinary skill in the art and well within their skill level. As I explained previously, a person of ordinary skill in the art would have reasonably expected success in selecting an appropriate material for the valve lumen in view of the range of suitable lumen materials disclosed in the prior art. *Supra* ¶88. As I also explained previously, a person of ordinary skill in the art would have reasonably expected success in adjusting the size, shape, and/or dimensions of Schaffer's U-shaped actuating members to increase their flexibility and improve the seal around the cylindrical seal module. *Supra* ¶75.

G. <u>Claim 7</u>

137. Claim 7 recites: "The valve of claim 1 wherein the lumen of the tubular member extends a long [sic] a first longitudinal axis, wherein the first member and the second member of the actuator are movable between the first and second positions along a second longitudinal axis, and wherein the first longitudinal axis is orthogonal to the second longitudinal axis." Schaffer discloses the additional limitations recited in Claim 7, and therefore, Schaffer anticipates Claim 7 or renders it obvious alone or in combination with Hartley ***or*** Eller.

138. Schaffer's actuator buttons (i.e., the first and second members) are movable between a first (undepressed) position shown in Figure 32 below and second (depressed) position shown in Figure 34 below along a longitudinal axis that is orthogonal to the longitudinal axis of the tubular member (seal module 100):

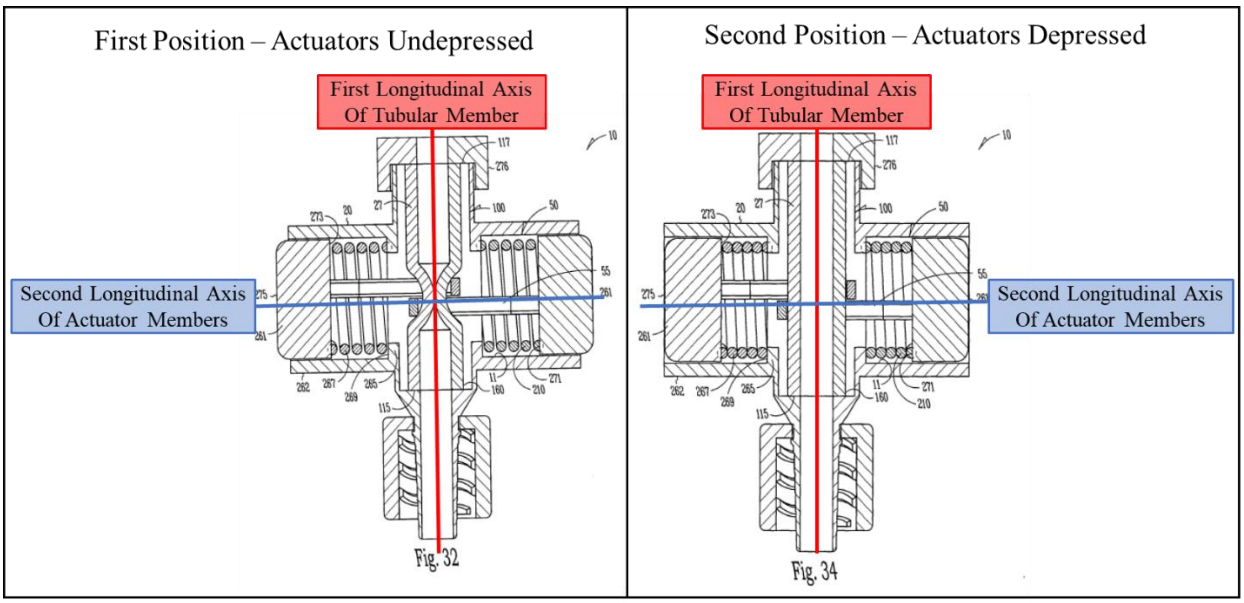

Ex. 1005 (Schaffer) at [0077], Figs. 31-34.

H. <u>Claim 8</u>

139. Claim 8 recites: "The valve of claim 1 wherein the biasing system comprises a first compression spring coupled to the first member and a second compression spring coupled to the second member." Schaffer discloses the additional limitations recited in Claim 8, and therefore, Schaffer anticipates Claim 8 or renders it obvious alone or in combination with Hartley ***or*** Eller.

140. As I explained previously for Claim 1, Schaffer's biasing system comprises two springs (also referred to as resilient members), and Schaffer discloses that "the distal end 271 of the resilient members 267 each abut the proximal end 273 of an actuator button 261":

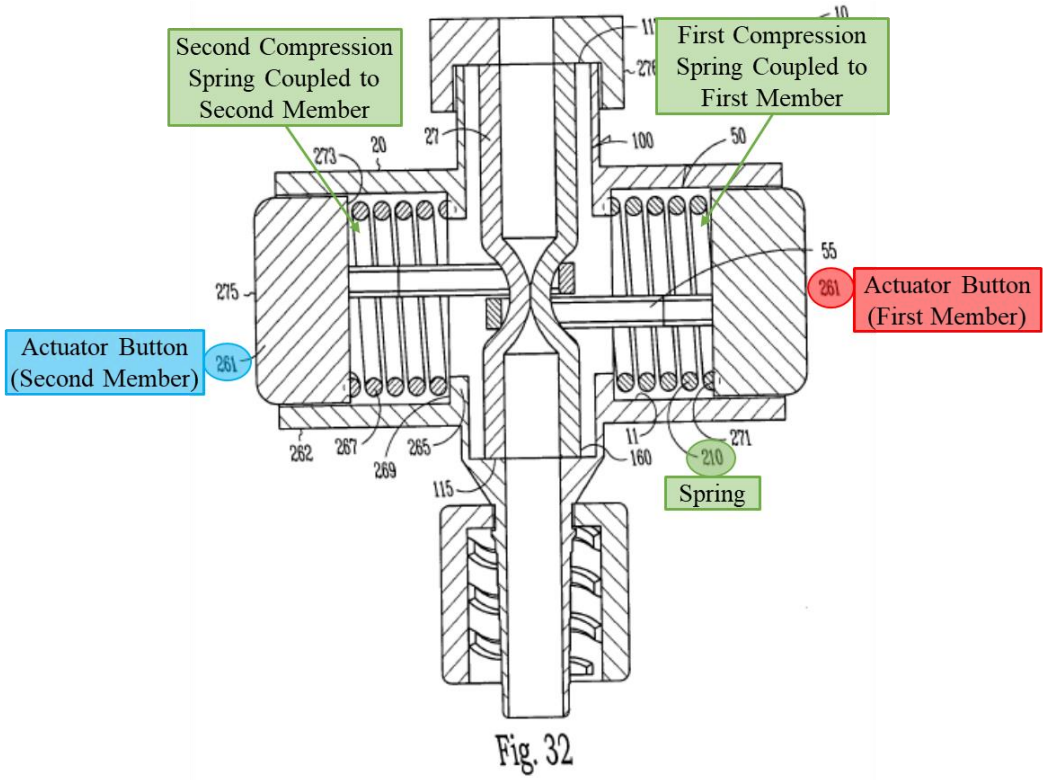

Fig. 32

Ex. 1005 (Schaffer) at [0076], Figs. 31-34. Thus, Schaffer's biasing system has "a first compression spring coupled to the first member and a second compression spring coupled to the second member."

I. <u>Claim 9</u>

141. Claim 9 recites: "The valve of claim 1, wherein in the first position, the first member and the second member of the actuator pull the filament to circumferentially constrict the tubular member such that the lumen is constricted and sealed." Schaffer discloses the additional limitations recited in Claim 9, and therefore, Schaffer anticipates Claim 9 or renders it obvious alone or in combination with Hartley ***or*** Eller.

142. As I explained previously for Claim 1, when Schaffer's actuator buttons are in the first, undepressed position, the springs coupled to Schaffer's actuator buttons impart forces on the actuator buttons causing the buttons to pull the U-shaped actuating members in opposite directions to constrict the seal module 100:

Constricted State

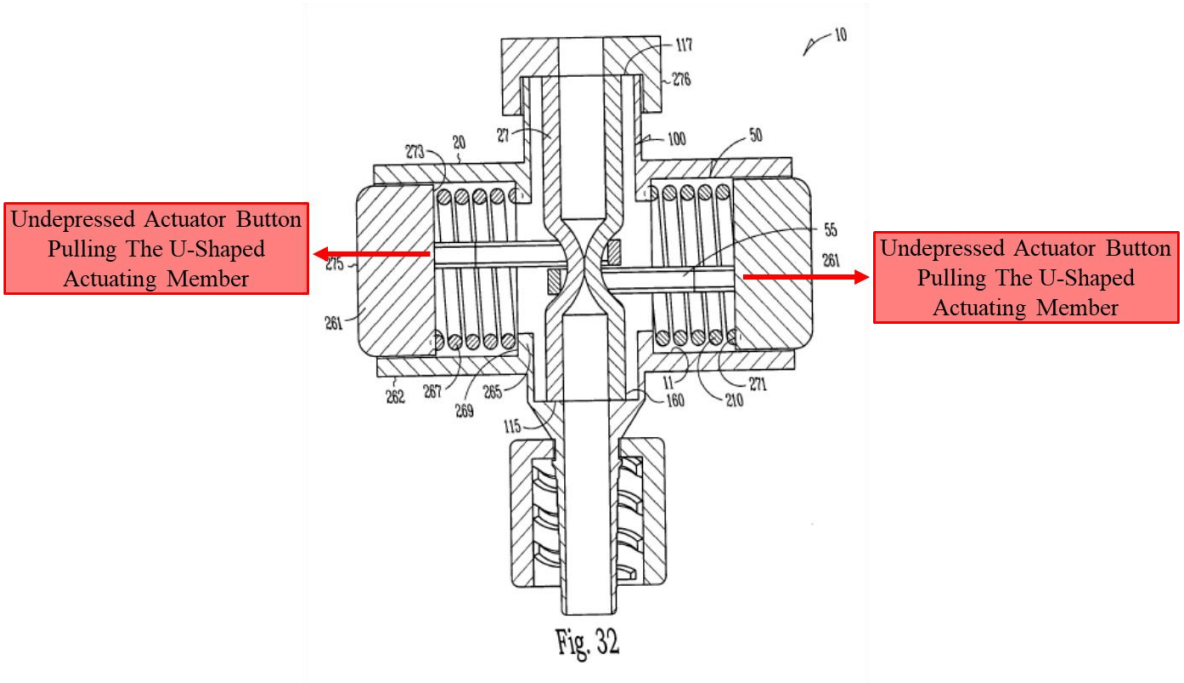

Ex. 1005 (Schaffer) at [0076]-[0077]. Alternatively, when Schaffer's U-shaped actuating members are replaced with Hartley's string or Eller's wire member, Schaffer's actuator buttons would pull the string/wire member, rather than the U-shaped actuating members, to circumferentially constrict the seal module 100.

VII. GROUND 5: CLAIMS 1-3, 5-6, 9 OBVIOUS OVER HARTLEY IN COMBINATION WITH ELLER

143. As I discussed in Grounds 1-4 above, Hartley discloses a hemostasis valve that "can be controlled to vary the size of the aperture through the valve and be flexible so that a seal may be formed against an instrument or other object inserted through the access valve." Ex. 1006 (Hartley) at [0004]. As illustrated in Figure 1 of Hartley below, the valve includes an elastomeric diaphragm extending

through the center of the valve, a rotary actuator, and a string extending around the outer surface of the diaphragm for constricting and sealing the valve:

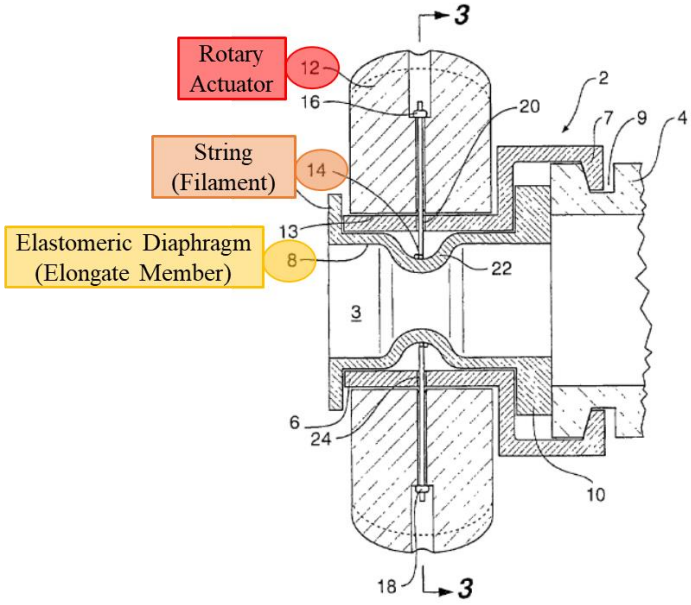

Fig 1

Id. at [0031], Fig. 1.

144. During prosecution of the ’011 patent, the Examiner found in the Notice of Allowance that Hartley discloses every limitation of independent Claim 1 except for the “biasing system.” Ex. 1002 (’011 patent prosecution history excerpt) at 60. I agree with the Examiner’s conclusion. However, I believe that the Examiner erred in failing to recognize that biasing systems for hemostasis valves were well known in the prior art as of September 2017 and would have been obvious to a person of ordinary skill in the art.

145. For example, as I explain in detail below, Eller discloses a system for biasing a hemostasis valve toward the closed position. In one example, Eller

describes a torsion spring secured to the valve's housing and actuator such that "when no outside forces are applied to the . . . valve device, the spring positions the actuator" in the closed position. Ex. 1007 (Eller) at 19:22-30. A person of ordinary skill in the art would have found it obvious to combine Eller's torsion spring with Hartley's rotary actuator to bias Hartley's valve closed when no outside forces were applied. Accordingly, the person of ordinary skill in the art would have found Claims 1-3, 5-6, and 9 obvious based on Hartley's hemostasis valve in combination with Eller's biasing system (e.g., torsion spring).

A. Claim 1

146. Based on my review of the prior art, it is my opinion that Hartley combined with Eller renders Claim 1 obvious.

1. Preamble

147. The preamble of Claim 1 recites: "A valve." If this preamble is limiting, Hartley and Eller disclose a valve for the reasons I explained previously for Grounds 1-4. *Supra* §VI.A.1.

2. Tubular Member

148. Claim 1 next recites: "a tubular member defining a lumen configured to slidably receive a catheter." Hartley discloses this limitation.

149. Hartley discloses an "access valve which can be controlled to vary the size of the aperture through the valve and be flexible so that a seal may be

formed against an instrument or other object inserted through the access valve." Ex. 1006 (Hartley) at [0004]. As shown in Figure 1 below, Hartley's valve includes a "cylindrical housing 6 into which is received a cylindrical elastomeric diaphragm 8 … [that] defines a cylindrical aperture 3 therethrough":

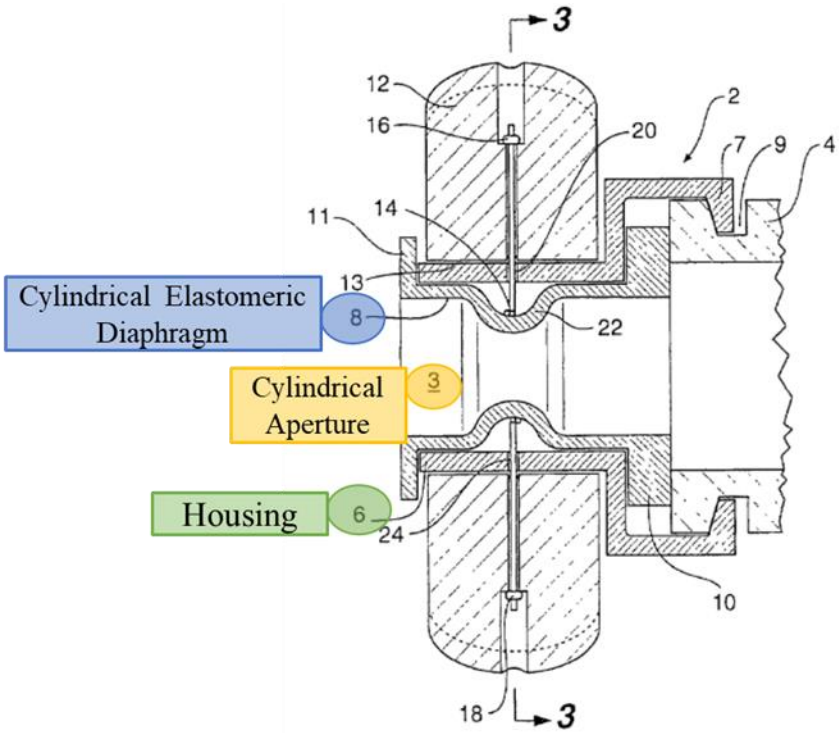

Fig 1

Id. at [0031], Fig. 1. Hartley discloses that "the cylindrical diaphragm can be completely constricted to prevent fluid flow through the valve or can be constricted to the extent that it closes around an instrument, for instance a catheter, passed through the valve." *Id.* at [0006]. Thus, Hartley's cylindrical diaphragm is "a tubular member defining a lumen configured to slidably receive a catheter."

3. Constricting Mechanism

150. Claim 1 next recites: "a constricting mechanism including at least one filament and an actuator coupled to the filament, the filament comprising a first portion extending around at least a portion of the tubular member and a second portion having a first end extending from the first portion in one direction and a second end extending from the first portion in another direction, and the actuator comprises a first member coupled to the first end of the filament and a second member coupled to the second end of the filament, wherein the first member and the second member of the actuator are moveable between (a) a first position wherein the filament circumferentially constricts the lumen to create a seal and (b) a second position wherein the filament is moved to at least partially open the lumen." Hartley discloses these limitations.

a. Actuator

151. Hartley's valve includes a cylindrical housing that holds a "cylindrical elastomeric diaphragm" and a rotatory actuator mounted onto the housing:

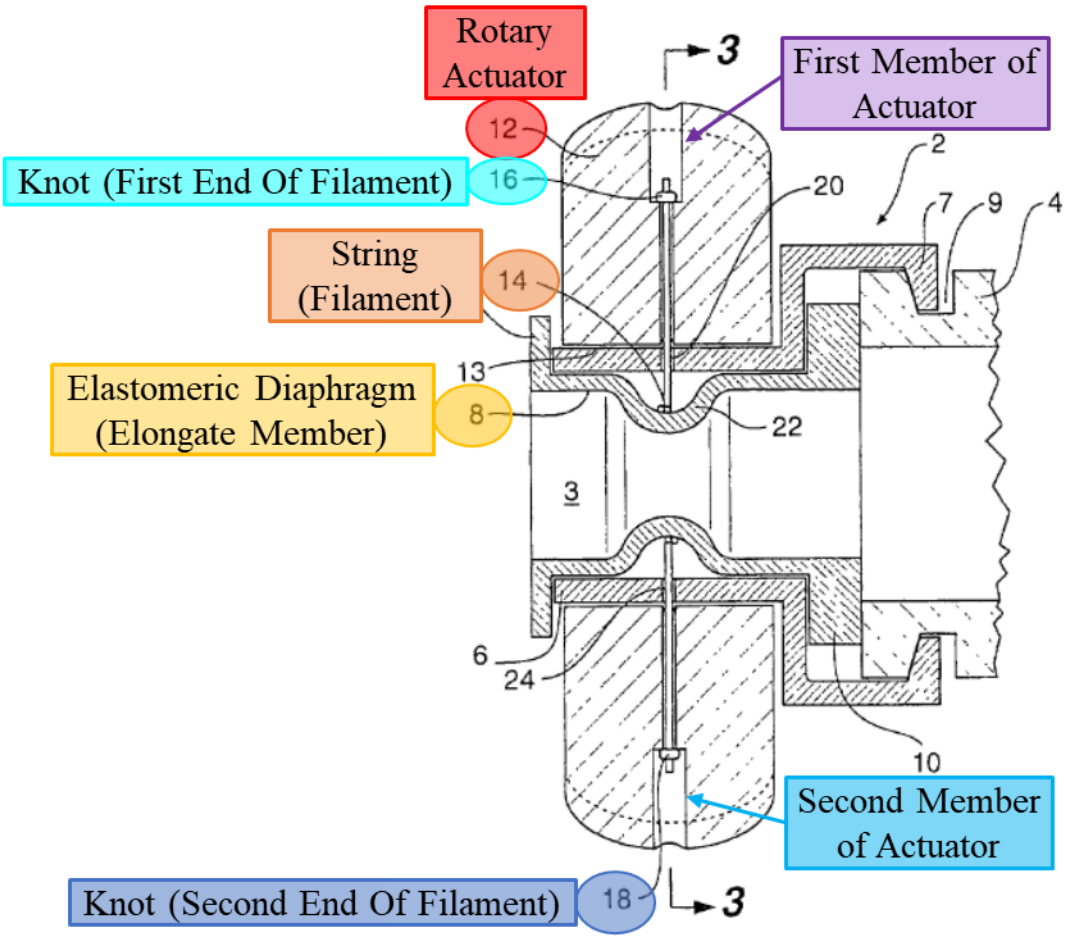

Fig 1

Ex. 1006 (Hartley) at [0031], Fig. 1.

152. The portions of the rotary actuator secured to the ends of the string 14 are the first and second members of the actuator as claimed in the ’011 patent because those portions of the actuator satisfy the requirements for the first and second members.

153. First, those portions of Hartley's actuator are coupled to the first and second ends of the string 14 (i.e., filament) via the knots 16 and 18. *Id.* at [0031].

154. Second, those portions of Hartley's actuator are "moveable between (a) a first position wherein the filament circumferentially constricts the lumen to create a seal and (b) a second position wherein the filament is moved to at least partially open the lumen." Hartley discloses that "[r]otation of the rotary actuator 12 with respect to the cylindrical housing 6 will cause the string 14 to be pulled in both directions at once and hence the cylindrical diaphragm 8 to be constricted":

Constricted State

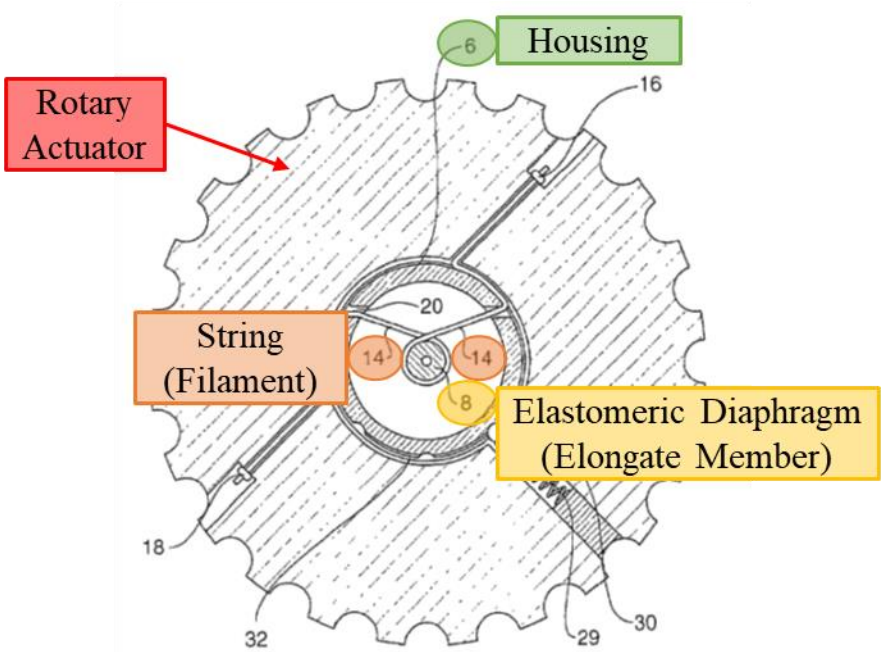

Fig 4

Id. at [0031], [0034], Fig. 4. Hartley further discloses that "[r]otation of the rotary actuator back to the central position where the detent ball 28 is received in

depression 34 will cause the sutures to loosen again so that the resilient cylindrical diaphragm will retain its original shape as shown in FIGS. 1 and 3":

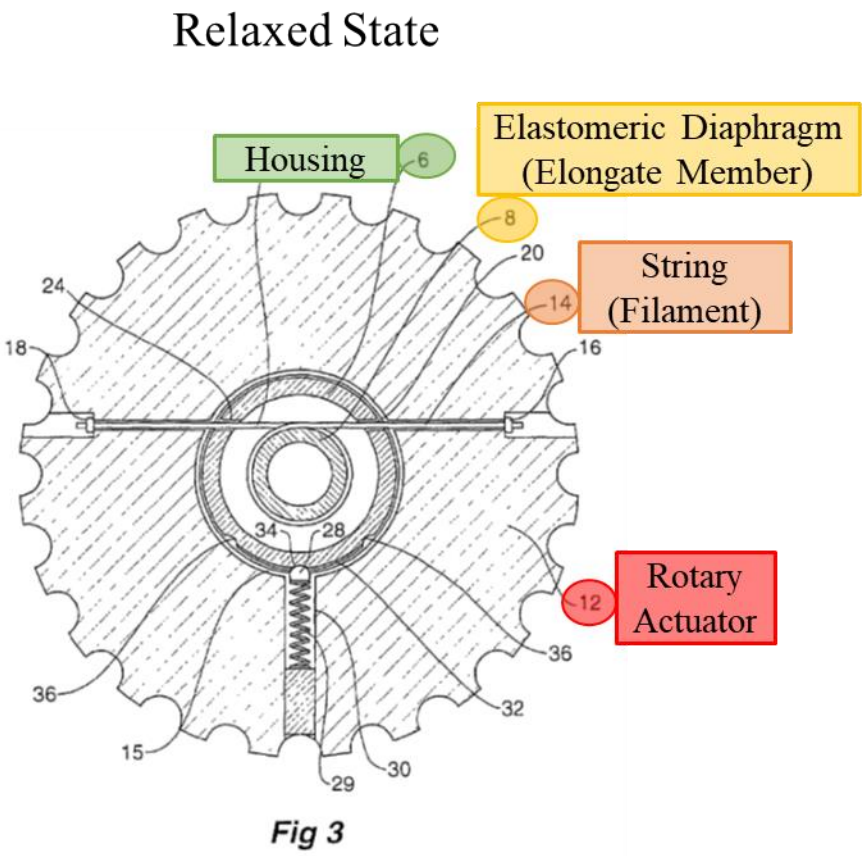

Id. at [0034], Fig. 3.

b. <u>Filament</u>

155. Hartley's valve includes a "flexible member," referred to as a "string" in the Detailed Description section, that is "mounted into the rotary actuator" as illustrated in Figure 1 below:

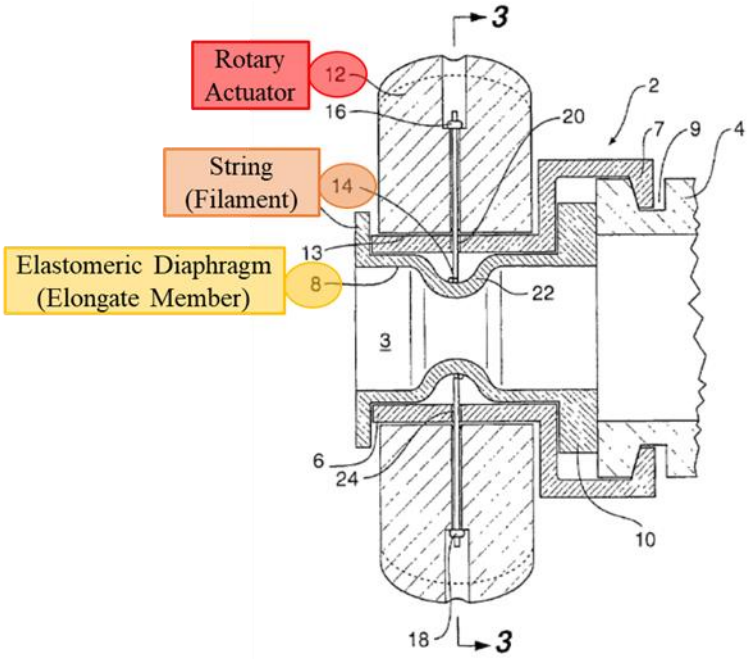

Fig 1

Id. at [0005], [0031], Fig. 1. Hartley also describes that the flexible member "may be a string, suture or band or other suitable material." *Id.* at [0017]. Hartley's flexible member is therefore a "filament" as disclosed and claimed in the '011 patent. *See* Ex. 1001 ('011 patent) at 9:18-20 (disclosing that the filament can constitute "one or several threads, lines, cords, rope, ribbon, flat wire, sheet, or tape"). I refer to Hartley's "string" herein; however, a suture or band would also meet the claim limitations as they would be at least a thread, line, cord, rope, ribbon, flat wire, sheet, or tape.

156. Hartley discloses that the "flexible member may be mounted at both of its ends to an actuator arrangement and hence the flexible member can be simultaneously pulled in substantially opposite directions to constrict the valve."

Ex. 1006 (Hartley) at [0010]. As illustrated in Figure 3 below, Hartley's string is secured to the rotary actuator at a first end via knot 16 and "then passes through an aperture 20 in the cylindrical housing 6 and then is wound preferably twice around the cylindrical diaphragm 8 … and then passes through a further aperture 24 in the cylindrical housing before being fixed by knot 18 again in the rotary actuator":

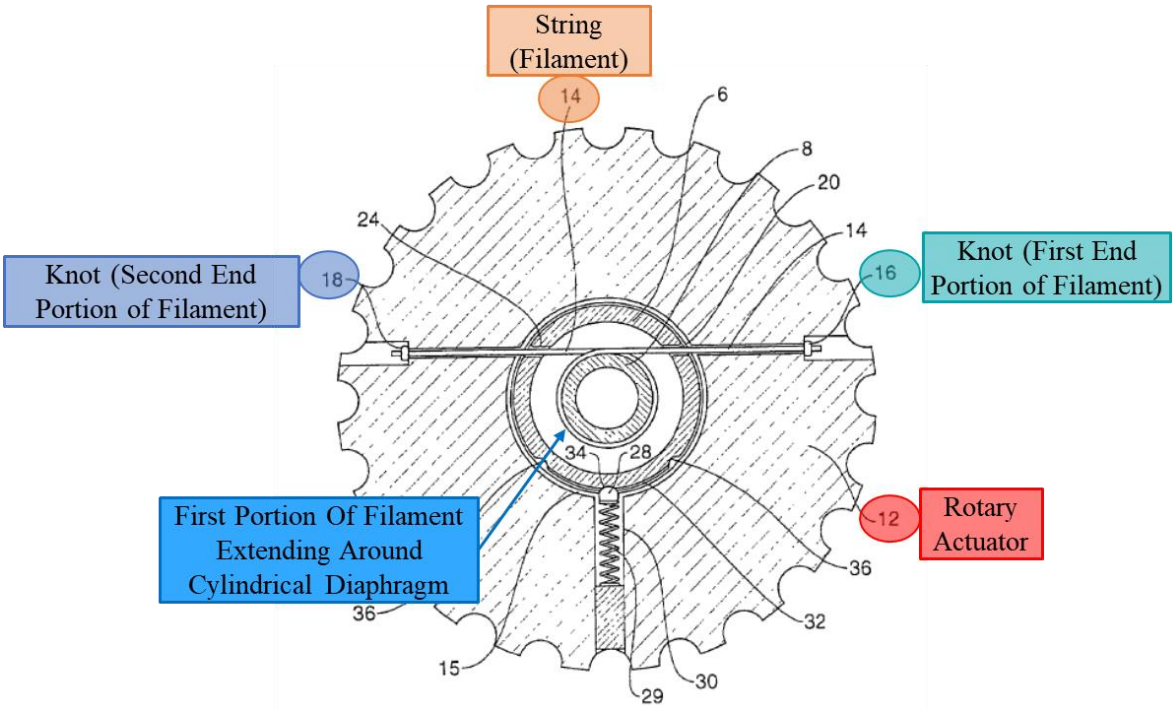

Fig 3

Id. at [0031], Fig. 3. Hartley's string therefore includes "a first portion extending around at least a portion of the tubular member" as recited in Claim 1. The portion of Hartley's string that "is wound preferably twice around the cylindrical diaphragm" is the claimed "first portion." *See id.* at [0031].

157. Hartley's string also includes a "a second portion having a first end extending from the first portion in one direction and a second end extending from the first portion in another direction." The portion of Hartley's string that extends away from the cylindrical diaphragm in opposite directions is the claimed "second portion":

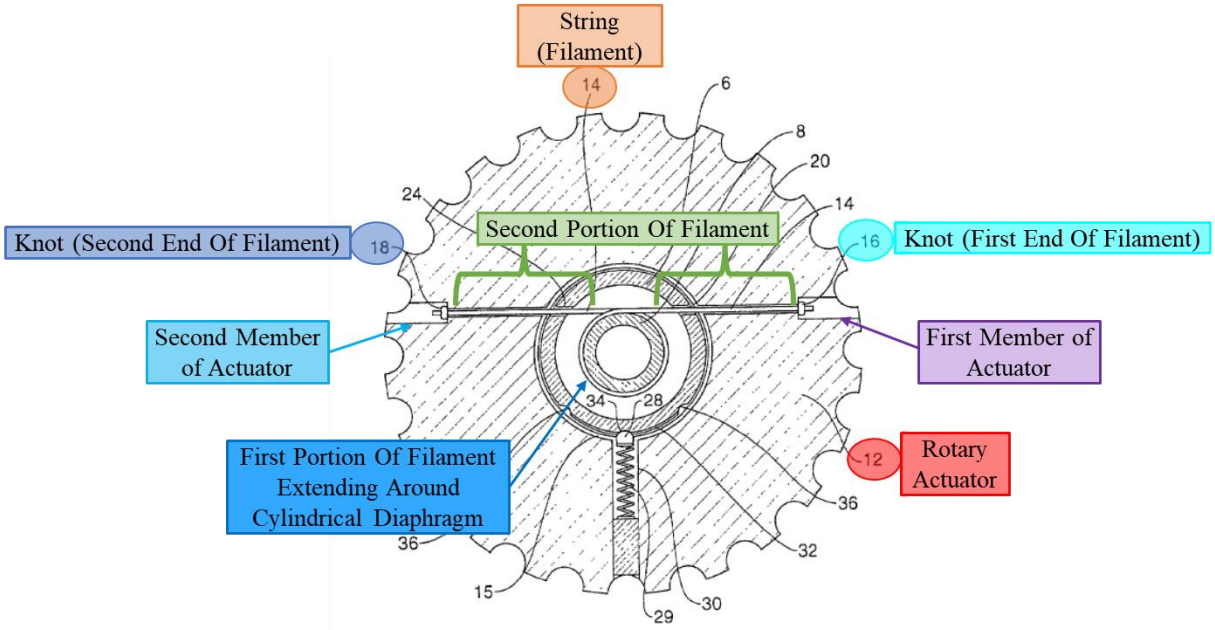

Fig 3

Id. at Fig. 3. The first end of second portion of Hartley's string is secured to the actuator at knot 16 and the second end of second portion is secured to the actuator at knot 18. *See id.* at [0031], Fig. 3.

158. Hartley discloses that "[r]otation of the rotary actuator 12 with respect to the cylindrical housing 6 will cause the string 14 to be pulled in both directions at once and hence the cylindrical diaphragm 8 to be constricted." *Id.* at [0031], [0034], Fig. 4. Hartley also discloses that its valve "will close over a

range of diameters of devices passed through the valve or can close completely down to be self sealing." *Id.* at [0037].

4. <u>Biasing System</u>

159. Claim 1 finally recites: "a biasing system configured to bias the first member and the second member to the first position." Hartley in combination with Eller renders this limitation obvious.

160. Eller discloses a hemostasis valve that includes "a housing 16, an actuator 18, a sleeve 20, [and] a first wire member 22":

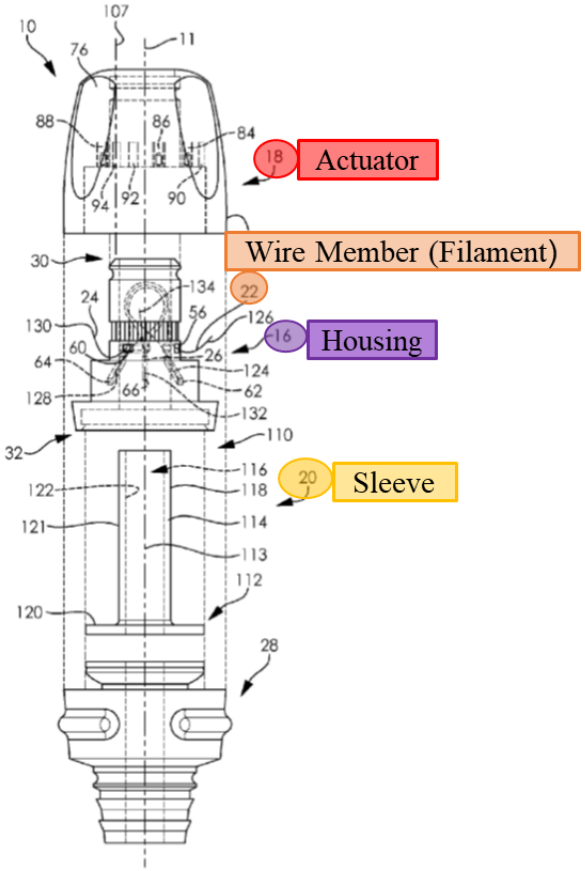

FIG. 2

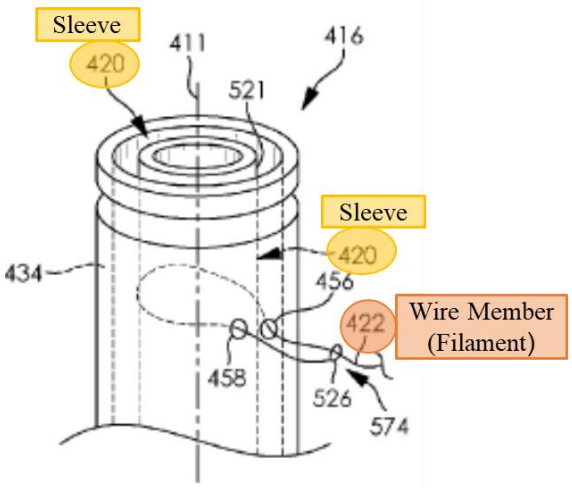

FIG. 16

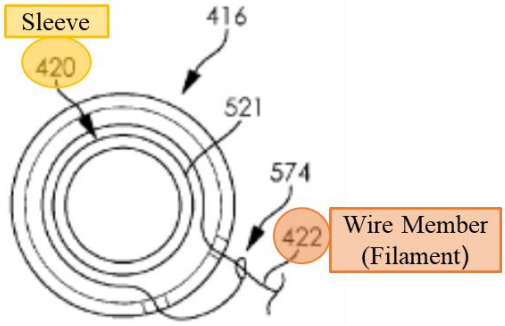

FIG. 17

Ex. 1007 (Eller) at 5:1-5, Figs. 2, 16-17. Eller explains that its valve has two configurations. "In a first configuration, the passageway 116 defined by the sleeve 20 is open such that fluid can pass through the passageway. In the second configuration, the passageway 116 defined by the sleeve 20 is closed such that fluid is prevented from passing through the passageway 116":

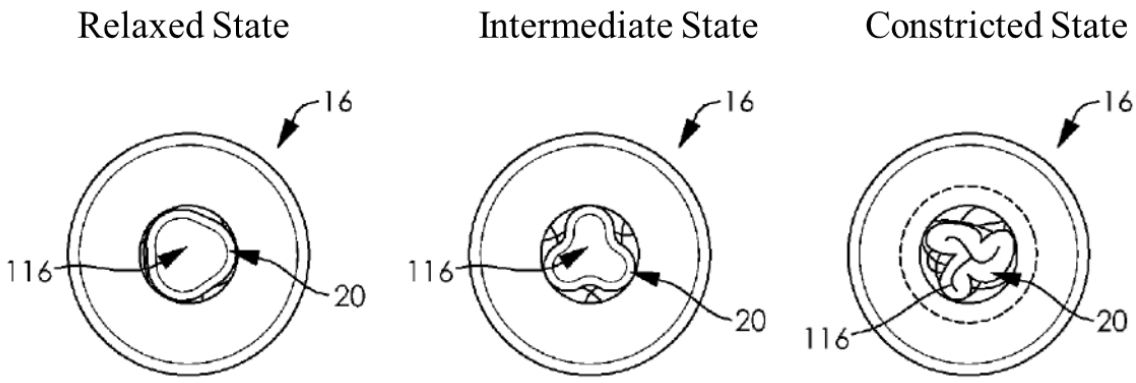

FIG. 10A FIG. 10B FIG. 10C

Id. at 12:13-18, Figs. 10A-10C. Eller further explains that its valve can include a

biasing systems for biasing the valve toward the closed configuration:

> Optionally, a selective fluid barrier valve device can be **biased to the second configuration** such that the **actuator is biased to the second position**. This can be accomplished using any suitable structural configuration or component. For example, a **torsion spring** can be positioned between the housing and the actuator and can be attached to the housing and the actuator such that **when no outside forces are applied to the selective fluid barrier valve device, the spring positions the actuator in the second position**.

Id. at 19:22-30 (emphasis added). A person of ordinary skill in the art would have recognized that Eller's exemplary torsion spring biasing system would be particularly suitable for use with a rotary actuator, like that disclosed in Hartley.

161. A person of ordinary skill in the art would have been motivated to combine Eller's torsion spring biasing system with Hartley's valve for several reasons. First, the person of ordinary skill in the art would have recognized that Eller's biasing system would help ensure that Harley's valve is sealed as quickly as possible when a catheter or other tool is removed through the valve during a medical procedure. Specifically, the torsion spring would maintain Hartley's actuator/string in the constricted position as the tool is withdrawn through the valve lumen and would then quickly seal the valve completely once the tool is fully withdrawn from the valve lumen without requiring additional intervention from the operator. This would help to minimize blood loss during the procedure, which is the primary purpose for the hemostasis valve.

162. Second, the person of ordinary skill in the art would have recognized that Eller's biasing system would simplify the use of Hartley's valve and the steps required to seal the valve to prevent blood loss. For example, the torsion spring biasing system would eliminate the need for the operator to manually seal the valve before or during the procedure. The valve would be set to the closed position by default, which would minimize the possibility that operator error could allow unwanted blood leakage.

163. Third, the person of ordinary skill in the art would have recognized that adding Eller's biasing system to Hartley's valve would merely entail the combination of known elements (Hartley's valve and Eller's biasing system) according to known methods (positioning a torsion spring between the valve housing and actuator) to yield the predictable result of reducing leakage of fluid through the valve. Combining such known elements in such a predictable manner would have been well within the level of ordinary skill in September 2017.

164. A person of ordinary skill in the art would have reasonably expected success in combining Eller's torsion spring biasing system with Hartley's valve. Hartley and Eller are from the same field of endeavor and share the same objective, which is providing a hemostasis valve that can seal around a range of tools inserted through the valve during intravascular medical procedures to minimize the leakage of blood or other fluids. Ex. 1006 (Hartley) at [0004]; Ex.

1007 (Eller) at Abstract, 12:15-18, 15:21-40, 17:47-18:8. The person of ordinary skill in the art would have therefore naturally turned to Eller when seeking to improve Hartley's hemostasis valve.

165. In addition, the person of ordinary skill in the art would have recognized that Hartley's valve shares many common features with Eller's valve, such as: a housing, a rotational actuator mounted to the housing, a tubular sleeve/diaphragm extending through the actuator, and a constricting string/wire extending circumferentially around the sleeve/diaphragm. *See, e.g.*, Ex. 1006 (Hartley) at [0031], Figs. 1-3; Ex. 1007 (Eller) at 5:1-12, Figs. 1-10. These similarities would have suggested to a person of ordinary skill in the art that Eller's torsion spring biasing system could successfully be added to Hartley's similarly structured valve.

166. In addition, Eller explains that the torsion spring "can be positioned between the housing and the actuator and can be attached to the housing and the actuator such that when no outside forces are applied to the selective fluid barrier valve device, the spring positions the actuator in the second position." Ex. 1007 (Eller) at 19:26-30. A person of ordinary skill in the art would have recognized that a similar arrangement could be used for Hartley's valve. Specifically, the person of ordinary skill in the art would have reasonably expected success in attaching the torsion spring to Hartley's housing 6 and rotational actuator 12 in a

position that would cause the actuator to be biased toward the closed position when no outside force is applied to the actuator.

B. <u>Claim 2</u>

167. Claim 2 recites: "The valve of claim 1 wherein the tubular member is pliable." Hartley discloses the additional limitations recited in Claim 2, and therefore, Hartley in combination with Eller renders this claim obvious.

168. Hartley discloses that its cylindrical diaphragm (i.e., the tubular member) "may be constructed from a elastomeric material such as silicone rubber." Ex. 1006 at [0016]. Elastomeric materials are pliable. Additionally, Hartley also discloses that the cylindrical diaphragm can be constricted and then spring back to its original, open configuration when the constricting element is loosened. *See id.* at [0008] (Hartley disclosing that "[p]referably the cylindrical diaphragm is formed from a resilient material so that after constriction and release of the flexible member the valve reopens"). Thus, Hartley's cylindrical diaphragm is pliable.

C. <u>Claim 3</u>

169. Claim 3 recites: "The valve of claim 1 wherein the first portion of the filament extends in a loop completely around the tubular member." Hartley discloses the additional limitations recited in Claim 3, and therefore, Hartley in combination with Eller renders this claim obvious.

170. Hartley discloses that its string "is wound preferably twice around the cylindrical diaphragm" as illustrated in Figure 3 below:

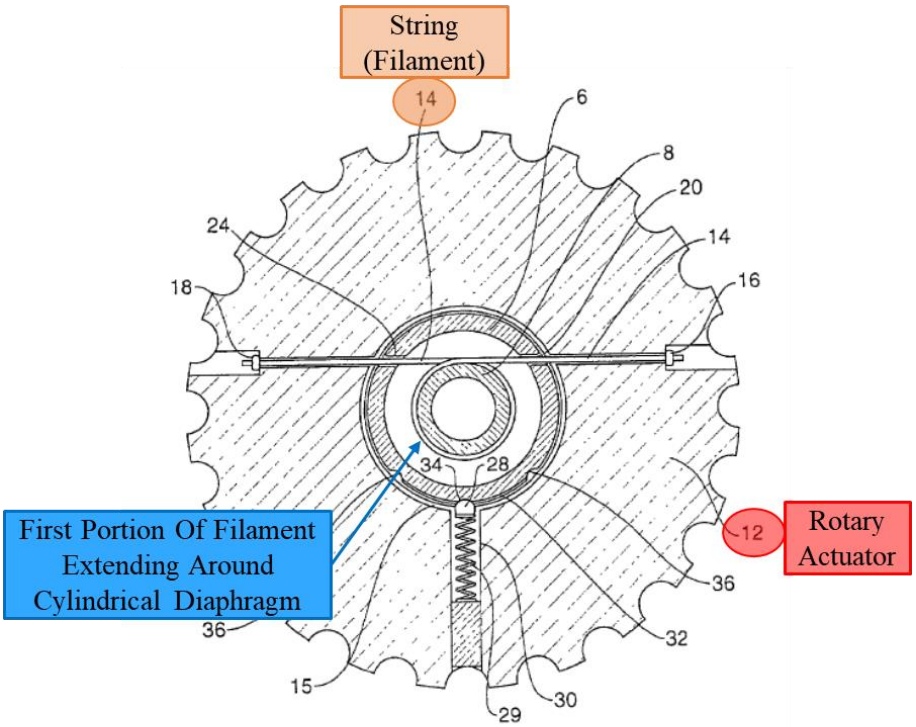

Fig 3

Ex. 1006 (Hartley) at [0031], Fig. 3. Hartley's string therefore includes a first portion that "extends in a loop completely around the tubular member." *Id.*

D. <u>Claim 5</u>

171. Claim 5 recites: "The valve of claim 1, when the first member and the second member of the actuator are in the first position, the lumen of the tubular member is configured to remain constricted and sealed when a pressure differential exists between (a) a first volume outside the lumen and adjacent to a first end of the tubular member and (b) a second volume outside the central lumen

and adjacent to a second end of the tubular member." Hartley in combination with Eller renders this claim obvious.

172. First, as I explained in Grounds 1-4 previously, Claim 5 encompasses ***any*** level of pressure differential between the first and second ends of the tubular member, and a person of ordinary skill in the art would have recognized that such a pressure differential would necessarily exist between the outside of the first end of a catheter and the second end the catheter during any procedure where the catheter is inserted into a patient's vasculature. *Supra* ¶118.

173. As I further explained in Grounds 1-4, Hartley's valve is intended for use during intravascular procedures, where such a pressure differential will necessarily exist, and Hartley discloses that its valve is intended to "permit[] [a] catheter or other instrument to be passed through the access valve and the valve to form a seal against the walls of the catheter or other instrument to prevent loss of blood or other fluid." Ex. 1006 (Hartley) at [0003]. To do so, Hartley's valve must be configured to maintain the seal in the presence of a pressure differential. *Supra* ¶118.

174. Hartley also discloses that "[d]epending on how much the flexible member [i.e., string] is pulled radially and/or tangentially the cylindrical diaphragm can be completely constricted to prevent fluid flow through the valve or can be constricted to the extent that it closes around an instrument, for instance

a catheter, passed through the valve." Ex. 1006 (Hartley) at [0006]. A person of ordinary skill in the art would have recognized that when Hartley's valve is "completely constricted" or "constricted to the extent that it closes around an instrument, for instance a catheter, passed through the valve," the valve would be configured to remain constricted and sealed, even in the presence of a pressure differential between the two ends of the valve lumen.

E. <u>Claim 6</u>

175. Claim 6 recites: "The valve of claim 1 wherein, when the first member and the second member of the actuator are in the first position, the lumen of the tubular member is configured to remain constricted and sealed when vacuum pressure is applied to a volume outside the lumen and adjacent to either a first end or a second end of the tubular member." Hartley in combination with Eller renders this claim obvious.

176. As I explained previously in Grounds 1-4, a person of ordinary skill in the art in September 2017 would have recognized that some intravascular procedures included suction devices, such as aspiration catheters, which would apply vacuum pressure outside of the lumen of the hemostasis valve. A person of ordinary skill in the art would have understood that a hemostasis valve used with a suction device should be configured to maintain its seal in the presence of a

vacuum pressure to effectively prevent air from being drawing into and through the valve during the procedure. *Supra* ¶132.

177. Accordingly, a person of ordinary skill in the art would have been motivated to ensure that Hartley's valve is configured to remain sealed when the rotary actuator is in the first, undepressed position, even when a vacuum pressure is applied to a volume outside of the valve's lumen. *See, e.g.,* Ex. 1006 (Hartley) at [0003], [0006]. A person of ordinary skill in the art would have accomplished such a seal by ensuring that the torsion spring coupled to the rotary actuator was strong enough to resist any rotational forces caused by the negative pressure. Based on my experience, I would expect any such forces to be minimal and, therefore, a person of ordinary skill in the art would have reasonably expected Hartley's valve with Eller's torsion spring to remain closed even if a negative vacuum pressure were applied to one end of the lumen running through the valve.

178. In addition, the only description in the '011 patent that I see regarding the valve's ability to seal in the presence of vacuum pressure is the following statement: "due to the narrowing shape of the elongate member 132 when the constricting mechanism 141 is in the first configuration, a vacuum applied to the portions of the delivery device 100 distal to the axis 152 draws the elongate member 132 towards the first configuration and can, in some embodiments, increase the strength, robustness, and/or strength of the seal of the

valve 104." Ex. 1001 ('011 patent) at 10:53-59. Notably, Hartley's elongate member (i.e., the cylindrical diaphragm 8) also has a "narrowing shape" when the actuator is in the first (i.e., constricted) configuration:

'011 Patent

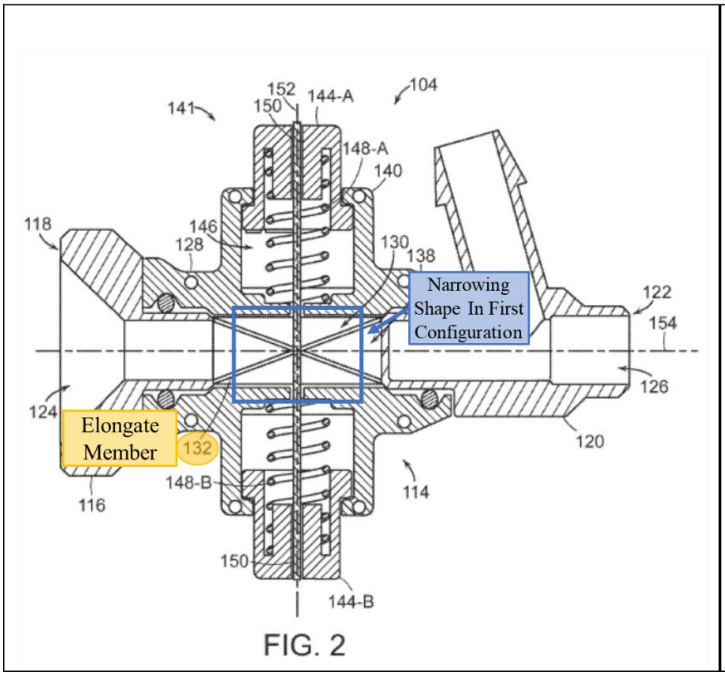

Hartley

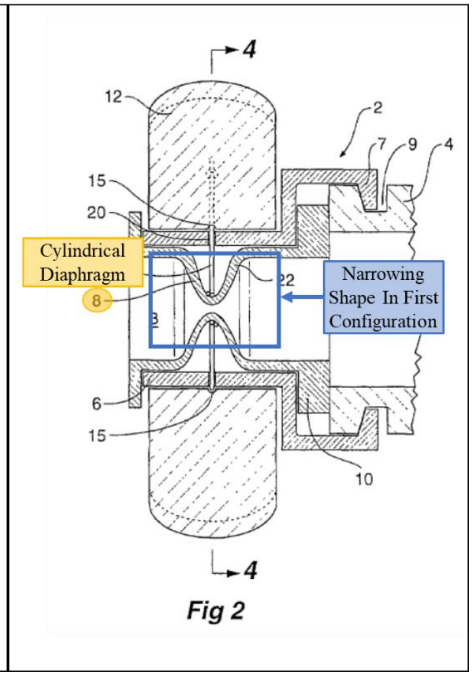

Id. at Fig. 2 (left); Ex. 1006 (Hartley) at [0031], Fig. 2[4] (right). Thus Hartley's valve has the same structure, features, and function as those that the '011 patent

[4] Figure 2 of Hartley shows the valve in a "partially constricted position." Ex. 1006 (Hartley) [0026]. However, a person of ordinary skill in the art would have recognized that the cylindrical diaphragm would have an even more narrowing shape in the fully constricted position, where the diaphragm is completely constricted. *See id.* at [0037] (Hartley disclosing that the valve "can close completely down to be self sealing").

describes as enabling the valve to seal in the presence of vacuum pressure. A person of ordinary skill would have expected Hartley's valve to remain closed even when subjected to negative pressure on one side of the valve due to the shape of the valve and due to the elastomeric properties of the diaphragm.

179. If Hartley's valve did not maintain its seal under vacuum pressure, it would have been obvious for a person of ordinary skill in the art to adjust Hartley's valve to ensure that it could maintain a seal in the presence of vacuum pressure. For example, the person of ordinary skill in the art could have adjusted the spring strength of the torsion spring added from Eller to apply additional force to seal the valve, they could have adjusted the resilience and compressibility of the cylindrical diaphragm that forms the valve's lumen, and/or they could have adjusted the shape, flexibility, and/or dimensions of the string to more closely conform to the shape of the seal module and any tool(s) inserted through the valve. A person of ordinary skill in the art would have been motivated to do so because the purpose of Hartley's hemostasis valve is to prevent leakage when other devices, or no devices, are inserted, and whether the valve is exposed to positive pressure or vacuum pressure. A person of ordinary skill in the art could have simply adjusted the strength of the torsion spring in several ways, including selecting a different material or winding the spring more tightly. These simple changes were well within the skill of a person of ordinary skill in the art and these

adjustments in material or configuration would have had predictable results. As I explained previously, a person of ordinary skill in the art would have reasonably expected success in selecting an appropriate material for the valve lumen in view of the range of suitable lumen materials disclosed in the prior art. *Supra* ¶88. A person of ordinary skill in the art would have reasonably expected success in adjusting the size, shape, and/or dimensions of Hartley's string to improve the sealing of the valve lumen. A person of ordinary skill could have adjusted the string in several ways, including selecting a different material for the string and/or shortening or lengthening the string to adjust the amount of tension applied by rotation of the actuator. These simple changes were well within the skill of a person of ordinary skill in the art and these adjustments in material or configuration would have had predictable results.

F. <u>Claim 9</u>

180. Claim 9 recites: "The valve of claim 1 wherein, in the first position, the first member and the second member of the actuator pull the filament to circumferentially constrict the tubular member such that the lumen is constricted and sealed." Hartley discloses the additional limitations recited in Claim 9, and therefore, Hartley in combination with Eller renders this claim obvious.

181. Hartley discloses that "[r]otation of the rotary actuator 12 with respect to the cylindrical housing 6 will cause the string 14 to be pulled in both directions at once and hence the cylindrical diaphragm 8 to be constricted":

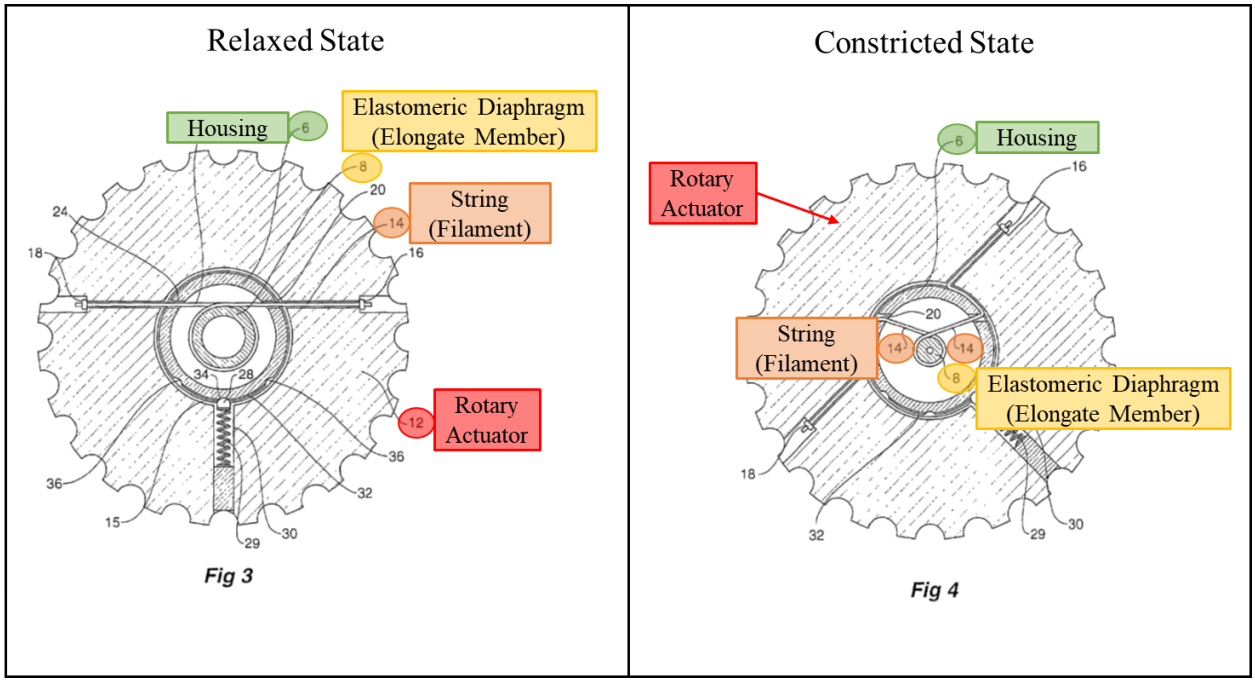

Ex. 1006 at [0031], Figs. 3-4. In other words, when Hartley's actuator is in the in first (i.e., constricted) position, the portions of the actuator that are secured to the string at knots 16 and 18 (i.e., the first and second actuator members) "pull the [string] to circumferentially constrict the tubular member such that the lumen is constricted and sealed." Hartley therefore discloses the additional limitations of Claim 9.

VIII. SECONDARY CONSIDERATIONS

182. I am not aware of any secondary considerations of nonobviousness relating to the claims of the '011 patent.

183. Further, because the devices claimed in the ’011 patent are not new, and were invented long before September 2017, I am not aware of any long-felt need in the industry, unexpected results, skepticism of the invention, or teaching away from the invention. I am also not aware of any praise for the alleged inventions or copying of the alleged inventions by other companies. If Patent Owner identifies any alleged evidence of secondary considerations in the future, I reserve the right to respond to that information.

IX. CONCLUSION

184. For the foregoing reasons, it is my opinion that Claims 1-9 of the ’011 patent are not patentable because they would have been obvious in view of the prior art discussed above and the knowledge of one of ordinary skill in the art at the time of the alleged claimed inventions.

185. I reserve the right to supplement my opinions in the future to address or respond to any arguments that Patent Owner may raise, as well as new information, including, but not limited to, any claim constructions advanced by Patent Owner or adopted by the Board in the Institution Decision, and respond to any alleged secondary considerations as they become available to me.

186. I declare that the foregoing is true and correct, and further that the foregoing statements were made with the knowledge that willful, false statements

and the like so made are punishable by fine or imprisonment, or both, under Section 1001 of Title 18 of the United States Code.

Executed on July 8, 2024 in Glen Ellen, Ca.

troy thornton

Troy Thornton