Filed July 8, 2024

On behalf of **Imperative Care, Inc.**
By: Joshua J. Stowell (Reg. No. 64,096)
Joseph R. Re (Reg. No. 31,291)
Brian C. Barnes (Reg. No. 75,805)
KNOBBE, MARTENS, OLSON & BEAR, LLP
2040 Main Street, 14th Floor
Irvine, CA 92614
Tel.: (949) 760-0404
Fax: (949) 760-9502
Email: BoxImperative011@knobbe.com

UNITED STATES PATENT AND TRADEMARK OFFICE

BEFORE THE PATENT TRIAL AND APPEAL BOARD

IMPERATIVE CARE, INC.,
Petitioner,

v.

INARI MEDICAL, INC.,
Patent Owner.

Case IPR2024-01157
Patent No. 11,697,011

PETITION FOR *INTER PARTES* REVIEW OF U.S. PATENT NO. 11,697,011

TABLE OF CONTENTS

Page No.

I. SUMMARY OF THE ARGUMENT 1

II. THE ’011 PATENT 6

A. Overview 6

B. Prosecution History 12

C. The Earliest Possible Priority Date 12

III. LEVEL OF ORDINARY SKILL 13

IV. CLAIM CONSTRUCTION 13

V. STATEMENT OF RELIEF REQUESTED 15

A. IPR Grounds 15

B. The Asserted References Are Prior Art 15

C. The Asserted References Are Analogous Art 15

VI. GROUNDS 1-4: CLAIMS 1-9 ANTICIPATED BY SCHAFFER OR OBVIOUS OVER SCHAFFER ALONE OR IN COMBINATION WITH HARTLEY OR ELLER 16

A. Claim 1 19

1. Preamble 19

2. Tubular Member 20

3. Constricting Mechanism 21

a. Actuator 22

b. Filament 26

TABLE OF CONTENTS
(*cont'd*)

Page No.

i. Schaffer 26

ii. Hartley 33

iii. Eller 40

4. Biasing System 49

B. Claim 2 51

C. Claim 3 51

1. Schaffer 51

2. Hartley 53

3. Eller 54

D. Claim 4 54

E. Claim 5 56

1. Schaffer 56

2. Schaffer and Hartley 59

3. Schaffer and Eller 61

F. Claim 6 63

G. Claim 7 67

H. Claim 8 68

I. Claim 9 69

VII. GROUND 5: CLAIMS 1-3, 5-6, 9 OBVIOUS OVER HARTLEY IN COMBINATION WITH ELLER 70

TABLE OF CONTENTS
(*cont'd*)

Page No.

A. Claim 1 71

1. Preamble 71

2. Tubular Member 71

3. Constricting Mechanism 72

a. Actuator 73

b. Filament 74

4. Biasing System 75

B. Claim 2 79

C. Claim 3 80

D. Claim 5 81

E. Claim 6 81

F. Claim 9 84

VIII. SECONDARY CONSIDERATIONS 84

IX. THE BOARD SHOULD NOT DENY INSTITUTION UNDER §325(D) 85

X. MANDATORY NOTICES, GROUNDS FOR STANDING, AND FEE PAYMENT 86

A. Real Parties-In-Interest (37 C.F.R. §42.8(b)(1)) 86

B. Related Matters (37 C.F.R. §42.8(b)(2)) 86

C. Lead and Backup Counsel (37 C.F.R. §42.8(b)(3)) 86

TABLE OF CONTENTS
(*cont'd*)

Page No.

D. Service Information (37 C.F.R. §42.8(b)(4)) 87

E. Grounds for Standing (37 C.F.R. §42.104) 87

F. Payment of Fees (37 C.F.R. §42.15(a)) 87

XI. CONCLUSION 87

TABLE OF AUTHORITIES

Page No(s).

Biagro W. Sales, Inc. v. Grow More, Inc.,
423 F.3d 1296 (Fed. Cir. 2005) 28

Comcast Cable Commc'ns LLC v. Promptu Sys. Corp.,
IPR2018-00342, Paper 13 (P.T.A.B. July 19, 2018) 85

In re Gleave,
560 F.3d 1331 (Fed. Cir. 2009) 23

Inari Medical, Inc. v. Imperative Care, Inc.,
No. 24-cv-3117 (N.D. Cal., filed May 22, 2024) 86

Ex Parte Klop,
Appeal 2019-006763, 2020 WL 247392
(P.T.A.B. May 7, 2020) 23

KSR Int'l Co. v. Teleflex, Inc.,
550 U.S. 398 (2007).....35, 36, 44, 78

In re Nilssen,
851 F.2d 1401 (Fed. Cir. 1988) 16

Phillips v. AWH Corp.,
415 F.3d 1303 (Fed. Cir. 2005) (en banc) 13

Realtime Data, LLC v. Iancu,
912 F.3d 1368 (Fed. Cir. 2019) 19

Sandisk Corp. v. Kingston Tech. Co., Inc.,
695 F.3d 1348 (Fed. Cir. 2012) 28

Unwired Planet, LLC v. Google Inc.,
841 F.3d 995 (Fed. Cir. 2016) 15

TABLE OF AUTHORITIES
(*cont'd*)

Page No(s).

OTHER AUTHORITIES

35 U.S.C. § 102 ..... 15, 19

35 U.S.C. § 103 ..... 15, 19

35 U.S.C. § 325 85

37 C.F.R. § 1.11 17

37 C.F.R. § 42.8 ..... 86, 87

37 C.F.R. § 42.15 87

37 C.F.R. § 42.100 13

37 C.F.R. § 42.104 87

LIST OF EXHIBITS

Exhibit No.	Description
1001	U.S. Patent No. 11,697,011 ("the '011 patent")
1002	'011 Patent Prosecution History Excerpt
1003	Expert Declaration of Troy Thornton
1004	Resume of Troy Thornton
1005	U.S. Patent Publication US 2003/0225379 A1 to Schaffer et al. ("Schaffer")
1006	U.S. Patent Publication US 2003/0116731 A1 to Hartley ("Hartley")
1007	U.S. Patent No. 9,980,813 B1 to Eller ("Eller")
1008	Drawings Submitted During Prosecution of U.S. Patent Application No. 10/371,190 dated June 18, 2003
1009	U.S. Patent No. 5,429,616 to Schaffer ("Schaffer '616")
1010	U.S. Patent Publication US 2011/0144592 A1 to Wong et al. ("Wong")
1011	U.S. Patent Publication US 2015/0173782 A1 to Garrison et al. ("Garrison")

Petitioner Imperative Care, Inc. ("Imperative" or "Petitioner") requests *inter partes* review ("IPR") of claims 1-9 ("the challenged claims") of U.S. Patent No. 11,697,011 ("the '011 patent"), which is assigned to Inari Medical, Inc. ("Patent Owner" or "PO").

I. SUMMARY OF THE ARGUMENT

A variety of medical procedures require physicians to insert medical tubes, such as catheters, into a patient's vascular system. Often, a physician will insert a first catheter into the patient's vasculature to act as a conduit for additional catheters and devices. However, the first catheter fills with blood upon insertion into the patient. If the end of the first catheter is not properly sealed, blood will leak out of the catheter. Decades ago, medical device companies developed hemostasis valves to seal the end of catheters, both when the catheter is empty and when another device is inserted through the catheter.

The challenged '011 patent claims a known type of hemostasis valve. The claimed valve includes a collapsible "elongate member" that extends through the center of the valve. The elongate member has a "central lumen" configured to slidably receive a catheter.[1]

[1] Petitioner added all colors and annotations except where otherwise noted.

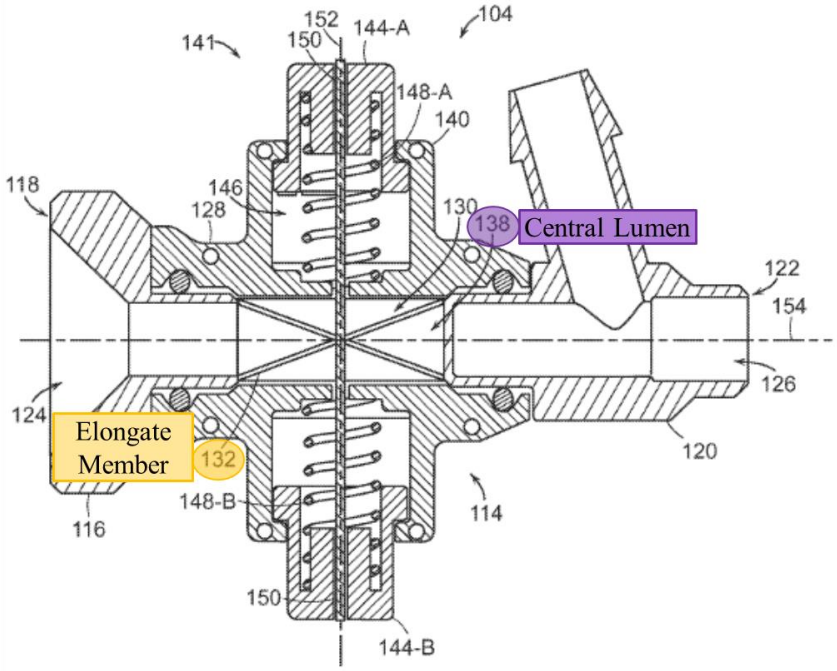

FIG. 2

The valve also includes at least one filament that extends around the collapsible elongate member. When tension is applied to the ends of the filament, the filament constricts the tubular member, thereby causing the member to collapse and seal the lumen. The filament can have a variety of configurations, as shown below.

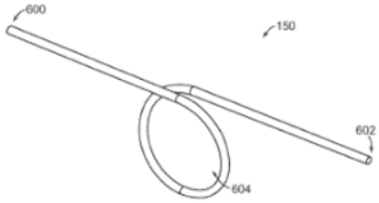

FIG. 6

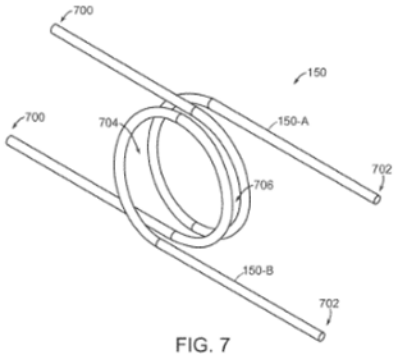

FIG. 7

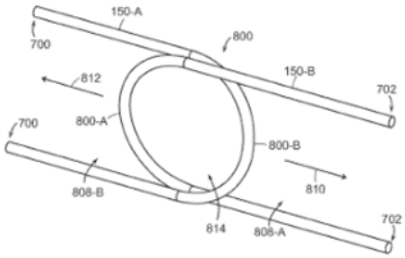

FIG. 8

The claimed valve also includes a "biasing system" (e.g., actuator buttons attached to springs) that applies tension to the filament(s) in a first position to constrict the valve and releases tension on the filament(s) in a second position to open the valve.

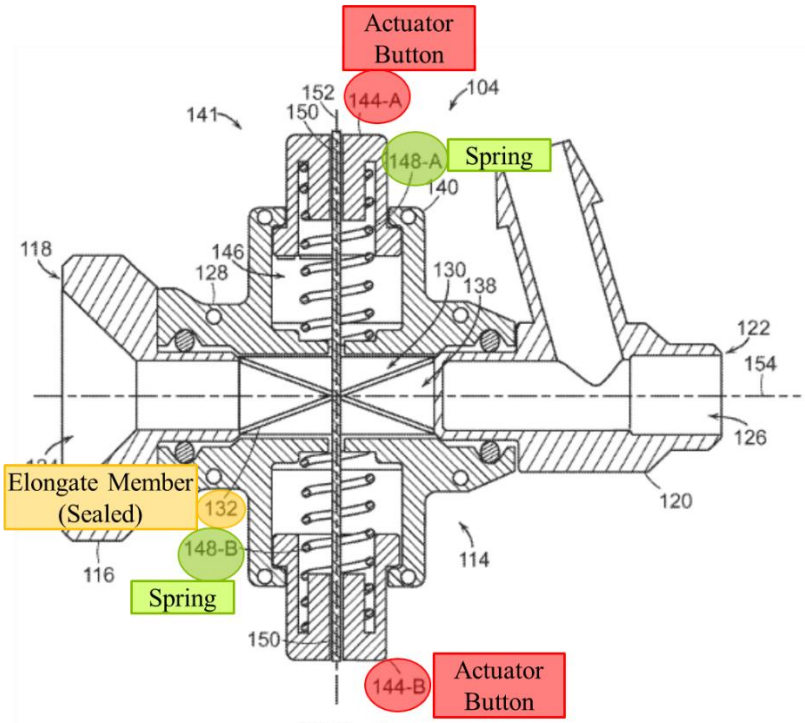

FIG. 2

This type of hemostasis valve was well known before September 6, 2017, the earliest claimed priority date for the ’011 patent. **Schaffer**, a patent application published in 2003, describes a hemostasis valve for use during minimally invasive intravascular procedures “that blocks the flow of gas or fluid completely and immediately with or without an instrument in place within the gas/fluid path.” (Ex. 1005, [0002], [0008].) Schaffer’s valve includes a tubular member, a filament wrapped around the tubular member to collapse the tubular member, and biasing springs attached to actuator buttons to place tension on the filament. In fact, as shown below, Schaffer’s valve has the same components, in the same arrangement, as the valve claimed in the ’011 patent:

’011 Patent

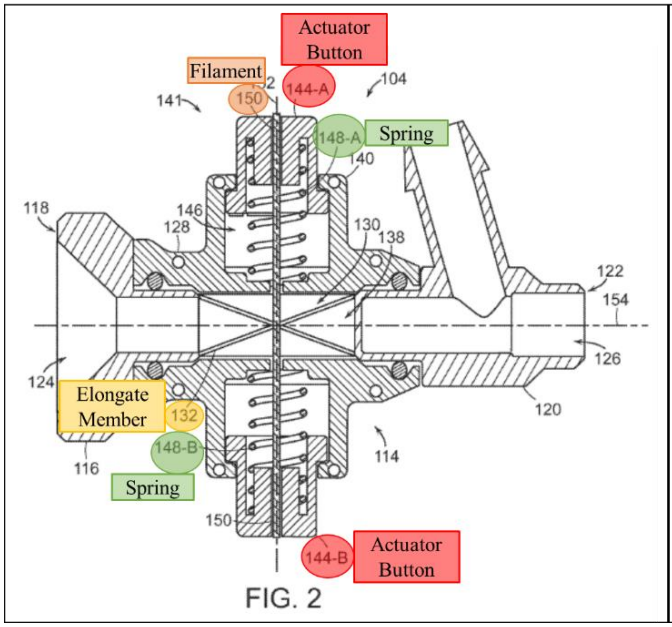

FIG. 2

Schaffer

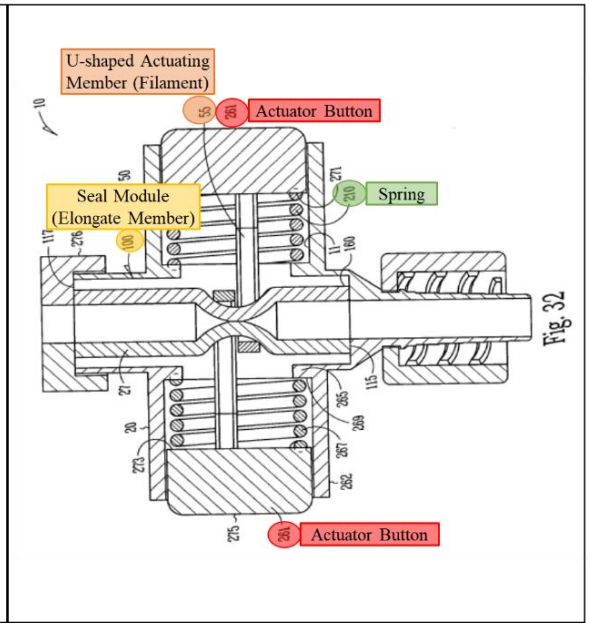

Fig. 32

Schaffer was not before the Examiner during prosecution and anticipates the challenged claims or renders them obvious in combination with Hartley or Eller.

Hartley, another patent application published in 2003, also describes a hemostasis valve having a filament that constricts the lumen of a tubular member:

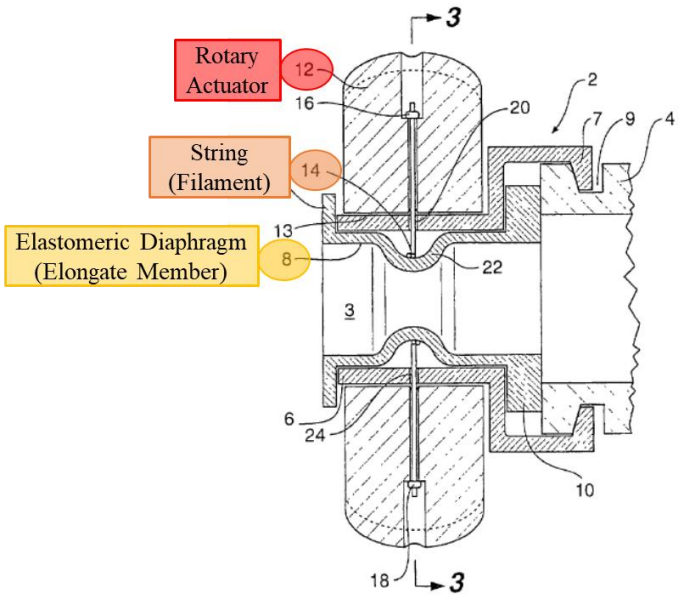

Fig 1

(Ex. 1006, [0031], Fig. 3.) Hartley's filament is attached to a rotary actuator that applies tension to the filament. Rotation of the actuator by the user determines whether the valve is open or closed.

The Examiner of the '011 patent did not make any prior art-based rejections during prosecution. However, in the Notice of Allowance, the Examiner found that Hartley was the closest prior art and taught each limitation of the '011 patent claims except the "biasing system." (Ex. 1002, 60.) However, the Examiner did not identify other references having biasing mechanisms or address whether a person of ordinary skill in the art ("POSITA") would have found it obvious to incorporate a biasing mechanism into Hartley. Eller discloses a rotatable hemostasis valve like the valve disclosed in Hartley. Eller's hemostasis valve includes a filament that constricts a central tubular member upon rotation of the actuator:

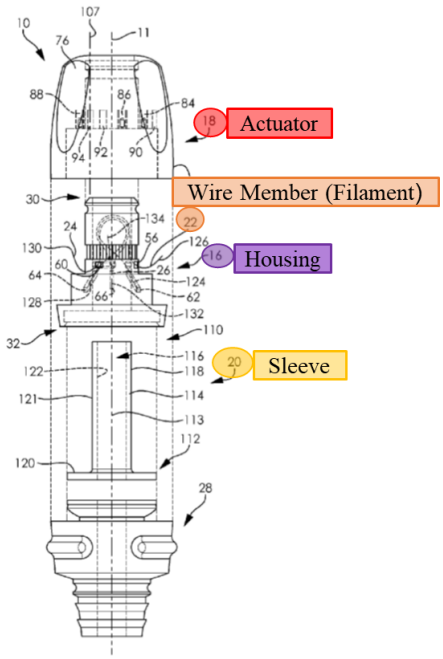

FIG. 2

(Ex. 1007, 5:1-12, Fig. 2.) Eller further discloses that the hemostasis valve can include a biasing mechanism, such as a torsion spring, that biases the valve toward the sealed state when no outside forces are applied to the actuator. (*Id.*, 19:22-30.) Eller was listed in an Invention Disclosure Statement ("IDS") during prosecution but was not substantively discussed or applied during prosecution. As explained in the accompanying declaration of Troy Thornton, a POSITA would have found it obvious to combine Eller's torsion spring with Hartley's rotatable hemostasis valve and, therefore, the combination of Hartley and Eller renders the challenged claims obvious.

The grounds identified by Petitioner below show that there is a reasonable likelihood that one or more claims of the '011 patent are unpatentable. Thus, Petitioner requests that the Board institute this IPR to reconsider the patentability of the '011 patent.

II. THE '011 PATENT

A. Overview

The '011 patent describes a hemostasis (or "garrote") valve for use during minimally invasive intravascular procedures. (Ex. 1001, 1:21-57.) The hemostasis valve is used with a catheter inserted into the patient's vasculature and provides a seal to minimize blood loss, prevent the introduction of air into the vasculature, and maintain sterility during the procedure. (*Id.*, 1:38-41.) The '011 patent states that

the hemostasis valve "can seal with or without a tool extending through the valve." (*Id.*, 5:51-54.)

The hemostasis valve includes a collapsible "elongate member 132" that extends through an interior channel in the housing. (*Id.*, 6:63-7:27.) The elongate member has a "thin-walled compliant tubular structure" that helps facilitate "the uniform collapse of the elongate member 132 and the sealing of the elongate member 132":

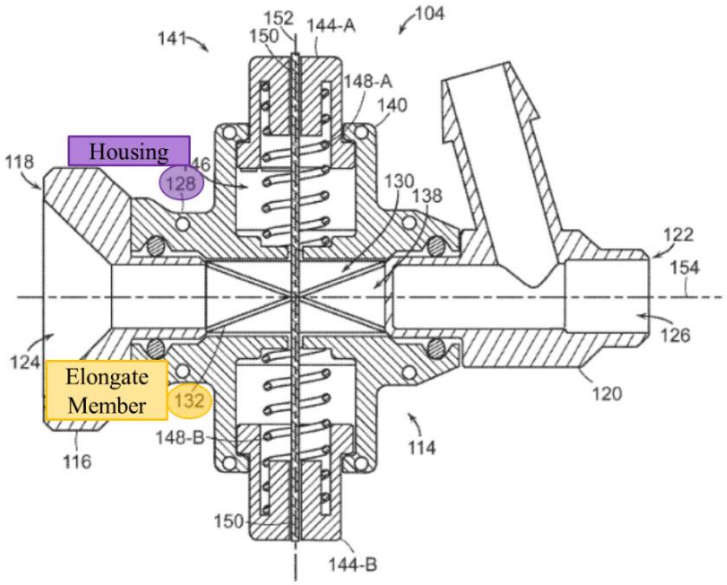

FIG. 2

(*Id.*, 7:13-19, Fig. 2.)

The valve also includes a "constricting mechanism" that can "collapse and seal the elongate member 132 via compression and/or constriction, and specifically via constriction with at least one filament 150":

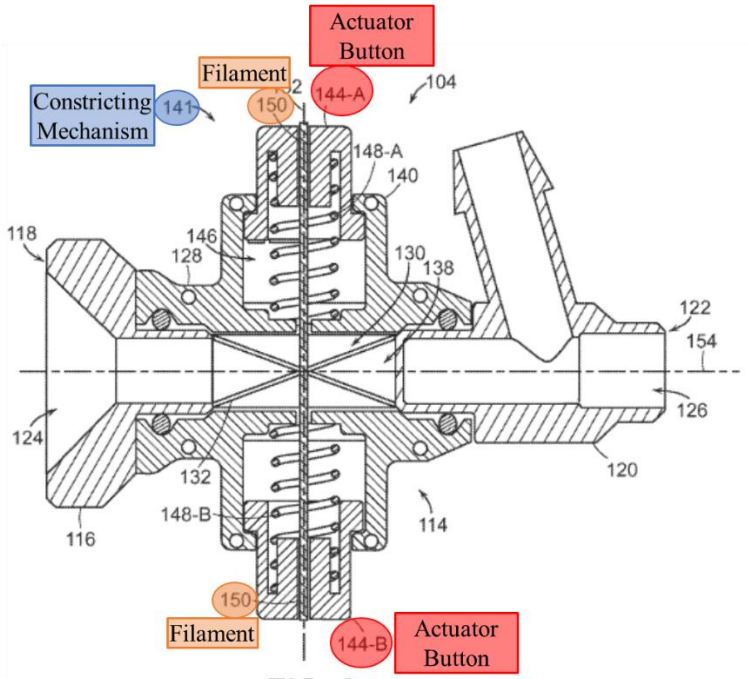

FIG. 2

(*Id.*, 8:1-4, Fig. 2.) The constricting mechanism includes "an actuator 142 which can be a manual actuator such as one or several buttons 144; and the at least one filament 150 that can extend at least partially around the elongate member 132." (*Id.*, 8:4-8.) The "filament 150 can be coupled to the actuator 142 such that the filament 150 selectively constricts, collapses, and/or seals the elongate member 132 . . . based on the movement and/or position of the actuator 142." (*Id.*, 9:21-25.)

The valve can also include a "bias feature," such as a spring, that biases the actuator toward the open or closed configuration. (*Id.*, 8:35-53.) In Figure 2, springs 148-A and 148-B bias the valve toward the closed configuration:

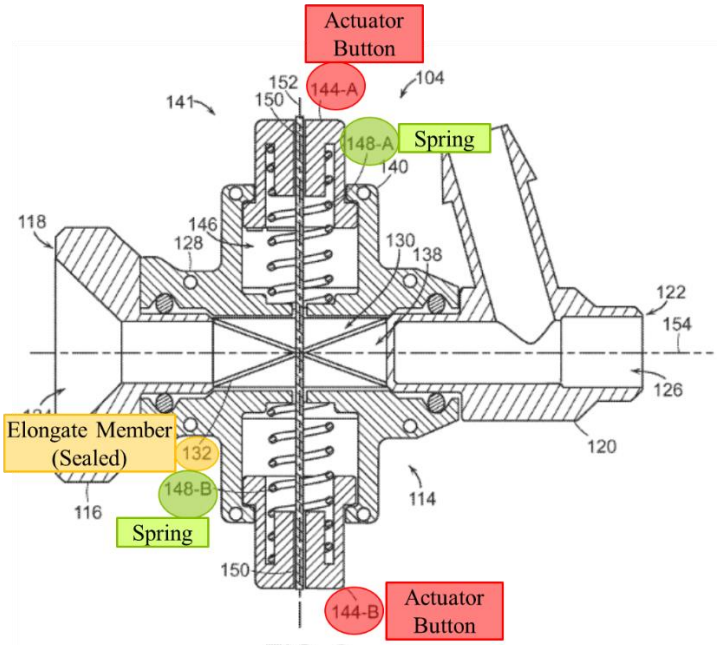

FIG. 2

(*Id.*, 8:35-53, Fig. 2.) Depressing the actuator buttons releases the tension on the filament, "thereby allowing the expansion of the elongate member 132 and the unsealing of the central lumen 138 of the elongate member 132":

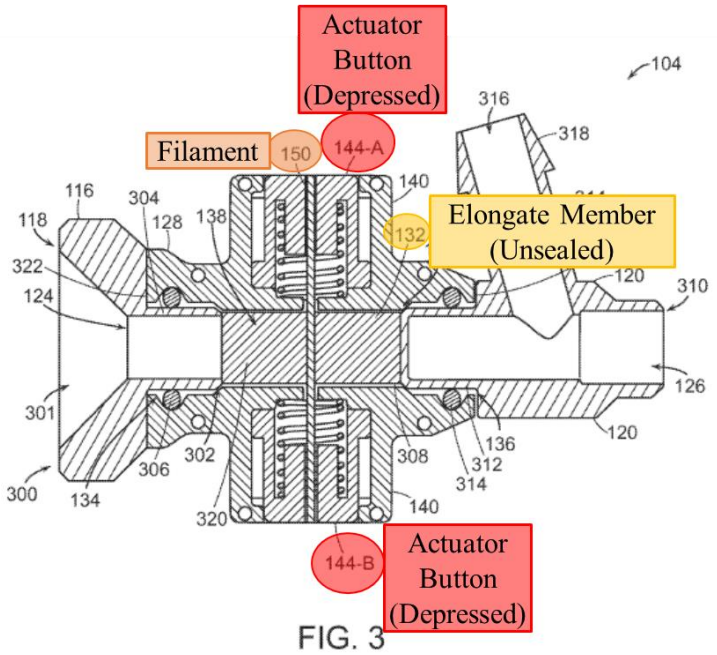

FIG. 3

(*Id.*, 9:51-59, Fig. 3.)

In use, the filament constricts the elongate member around a tool inserted through the central lumen of the elongate member, "create[ing] a seal between the elongate member 132 and the tool," as illustrated in Figure 4:

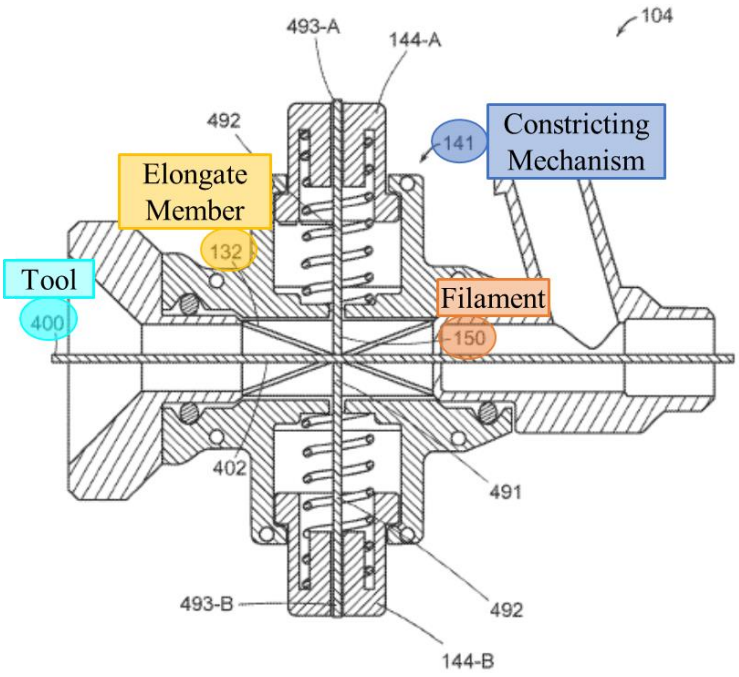

(*Id.*, 11:67-12:27, Fig. 4.)

The "filament 150 can be arranged in a variety of configurations" including a "single loop 604 that can extend around the elongate member 132" as shown in Figure 6, multiple loops as shown in Figure 7, or a "U-shaped section between the two ends of the filament 150" as shown in Figures 8 and 9:

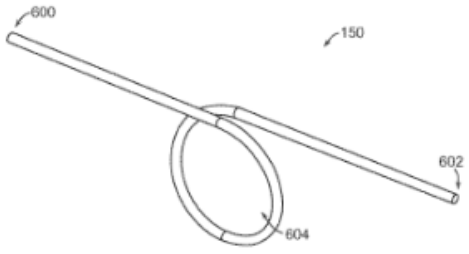

FIG. 6

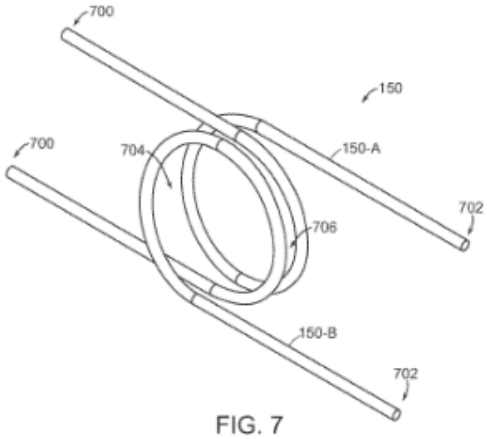

FIG. 7

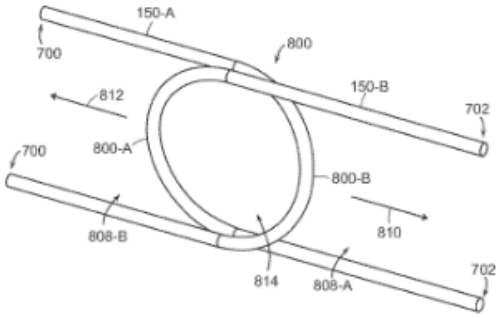

FIG. 8

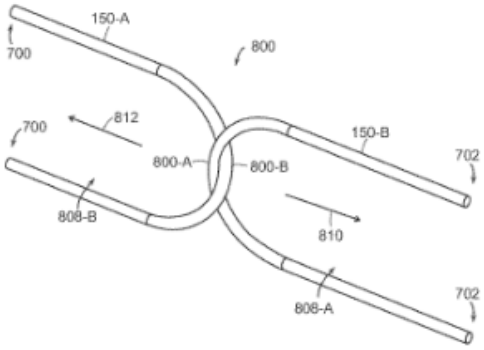

FIG. 9

(*Id.*, 13:29-14:46, Figs. 6-9.) The patent also discloses that "[t]he filament can be made from a variety of materials including, for example, a polymer, a synthetic, and/or a metal." (*Id.*, 9:10-13.) The filament can also "comprise a single strand such as, for example, a monofilament" or it "can comprise a plurality of strands that can be, for example, twisted, woven, grouped, and/or fused to form the filament." (*Id.*, 9:13-18.) "[T]he filament 150 can comprise one or several threads, lines, cords, rope, ribbon, flat wire, sheet, or tape." (*Id.*, 9:18-20.) The filament may also "comprise multiple filaments," such as in Figures 7-9, where "each of the multiple filaments can have a first end 700 and a second end 702." (*Id.*, 13:6-12.) Further,

"in some embodiments, each of the first end 700 and the second end 702 of one or more of the multiple filaments 150 can be coupled to different buttons 144":

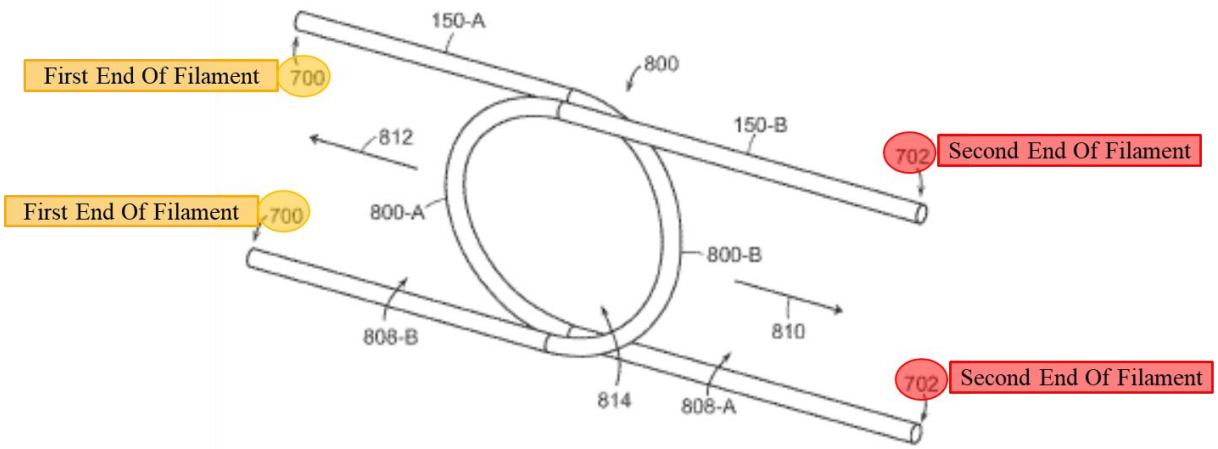

FIG. 8

(*Id.*, 13:20-23, Fig. 8.)

B. <u>Prosecution History</u>

The examiner of the '011 patent issued a single, non-final action on grounds not relevant here. (Ex. 1002, 149-155.) The examiner did not make any prior-art based rejections. In the Notice of Allowance, the examiner concluded that the closest prior art of record, Hartley (US 2003/0116731), disclosed every limitation of allowed claim 1 except a "biasing system configured to bias the first member and the second member to the first position." (Ex. 1002, 60.)

C. <u>The Earliest Possible Priority Date</u>

The '011 patent claims priority to provisional application No. 62/554,931 ("the '931 provisional"), filed September 6, 2017. (Ex. 1001.) Accordingly, the

earliest possible priority date for the ’011 patent is September 6, 2017. Petitioner applies this earliest priority date in this Petition; however, Petitioner reserves its right to challenge the priority date of the ’011 patent in any subsequent proceeding(s).

III. LEVEL OF ORDINARY SKILL

A POSITA in September 2017 would have had an undergraduate degree in mechanical engineering or a related engineering discipline and 2-4 years of product design or engineering experience. (Ex. 1003, ¶35.)

IV. CLAIM CONSTRUCTION

The claim terms should receive their ordinary and customary meaning as understood by a POSITA at the time of filing and in accordance with the specification and the prosecution history. 37 C.F.R. §42.100(b); *see Phillips v. AWH Corp.*, 415 F.3d 1303 (Fed. Cir. 2005) (en banc). However, “the specification may reveal a special definition given to a claim term by the patentee that differs from the meaning it would otherwise possess [and] in such cases, the inventor's lexicography governs.” *Id.* at 1316. The ’011 patent specification provides examples of “filaments” that demonstrate the patent is using the term “filament” more broadly than the plain and ordinary meaning.

The claims of the ’011 patent require “at least one filament” where the “filament” has “a first portion extending around at least a portion of the tubular member and a second portion having a first end extending from the first portion in

one direction and a second end extending from the first portion in another direction." (Ex. 1001, claim 1.) Other than clarifying that the filament has a "first portion" and "second portion," the claim language does not provide a POSITA with guidance on the meaning or structure of the claimed "filament."

However, the specification of the '011 patent broadly describes the "filament." The specification states, "[t]he filament can be made from a variety of materials including, for example, a polymer, a synthetic, and/or a metal." (Ex. 1001, 9:10-13.) The '011 patent further states, "the filament can comprise a single strand such as, for example, a monofilament, [or] the filament can comprise a plurality of strands that can be, for example, twisted, woven, grouped, and/or fused to form the filament." (*Id.*, 9:13-18.) The '011 patent also states, "the filament 150 can comprise one or several threads, lines, cords, rope, ribbon, flat wire, sheet, or tape." (*Id.*, 9:18-20.) Additionally, the '011 patent explains that "the filament 150 can comprise multiple filaments and specifically, as shown in FIGS. 7 through 9, the filament 150 can comprise a first filament 150-A and a second filament 150-B." (*Id.*, 13:6-9.)

Given the above descriptions, a POSITA would have understood the claim term "filament" to mean at least "one or more threads, lines, cords, ropes, ribbons, flat wires, sheets, or tapes." (Ex. 1003, ¶52.)

No other terms of the ’011 patent require construction to resolve the patentability issues presented herein.

V. STATEMENT OF RELIEF REQUESTED

A. IPR Grounds

Petitioner asserts the following grounds of unpatentability:

Ground	Reference(s)	Basis	Challenged Claims
1	Schaffer	35 U.S.C. § 102	1-9
2	Schaffer	35 U.S.C. § 103	1-9
3	Schaffer + Hartley	35 U.S.C. § 103	1-9
4	Schaffer + Eller	35 U.S.C. § 103	1-9
5	Hartley + Eller	35 U.S.C. § 103	1-3, 5-6, 9

B. The Asserted References Are Prior Art

The following references are prior art under at least 35 U.S.C. §102(a)(1):

(1) Schaffer (Ex. 1005) published on December 4, 2003;

(2) Hartley (Ex. 1006) published on June 26, 2003; and

(3) Eller (Ex. 1007) published on October 29, 2015.

C. The Asserted References Are Analogous Art

The asserted references are analogous art that is usable in an obviousness combination. *Unwired Planet, LLC v. Google Inc.*, 841 F.3d 995, 1000 (Fed. Cir.

2016). The references are from the same field as the ’011 patent, e.g., hemostasis valves for use during intravascular procedures. (Ex. 1003, ¶26.) The references are also pertinent to the problem the inventor was focused on, e.g., sealing a catheter during intravascular procedures to minimize blood leaks. (*Id*.) Accordingly, a POSITA is presumed to have been aware of these references. *In re Nilssen*, 851 F.2d 1401, 1403 (Fed. Cir. 1988).

VI. GROUNDS 1-4: CLAIMS 1-9 ANTICIPATED BY SCHAFFER OR OBVIOUS OVER SCHAFFER ALONE OR IN COMBINATION WITH HARTLEY OR ELLER

Schaffer discloses a hemostasis valve for use during minimally invasive intravascular procedures “that blocks the flow of gas or fluid completely and immediately with or without an instrument in place within the gas/fluid path.” (Ex. 1005, [0002], [0008].) Schaffer’s valve has the same components, in the same arrangement, as the valve claimed in the ’011 patent, as highlighted in the side-by-side comparison below:

’011 Patent	Schaffer
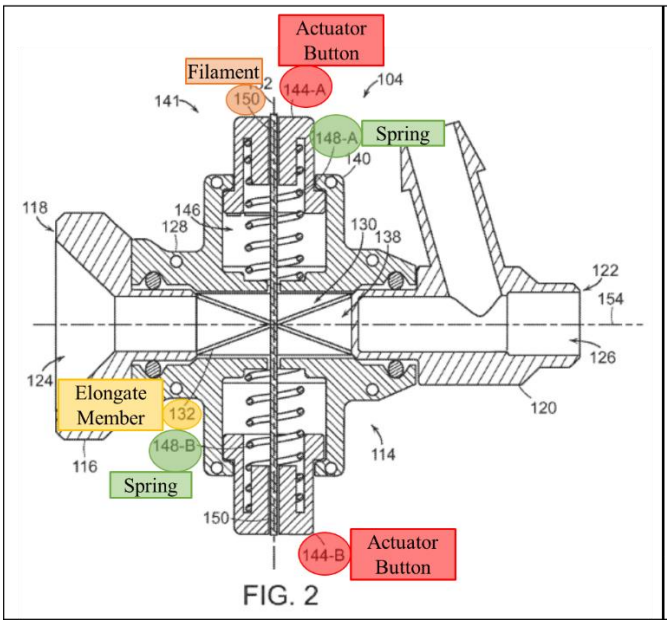	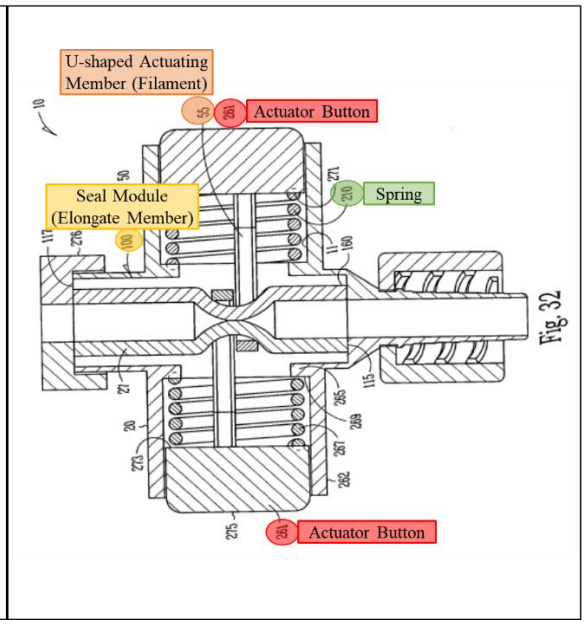

(Ex. 1001, Fig. 2 (left); Ex. 1005, Fig. 32 (right)[2]; Ex. 1003, ¶54.) Becaues Schaffer discloses every limitation of the challenged claims, it anticipates claims 1-9. (Ex. 1003, ¶54.)

Moreover, even if the Board were to find that Schaffer’s two U-shaped actuating members do not satisfy the “at least one filament” limitation in claim 1, a POSITA would have found it obvious to substitute the filaments disclosed in Hartley or Eller for Schaffer’s U-shaped actuating members. Hartley and Eller disclose hemostasis valves having a filament that constricts the lumen of a tubular member to seal the valve. Hartley’s “filament” is a string secured to a rotary actuator:

[2] Petitioner uses the versions of Schaffer’s drawings that were submitted during prosecution on June 18, 2003 (Ex. 1008) because the drawings are clearer than the drawings in the published application. The drawings became publicly available when Schaffer was published on December 4, 2003. 37 C.F.R. § 1.11.

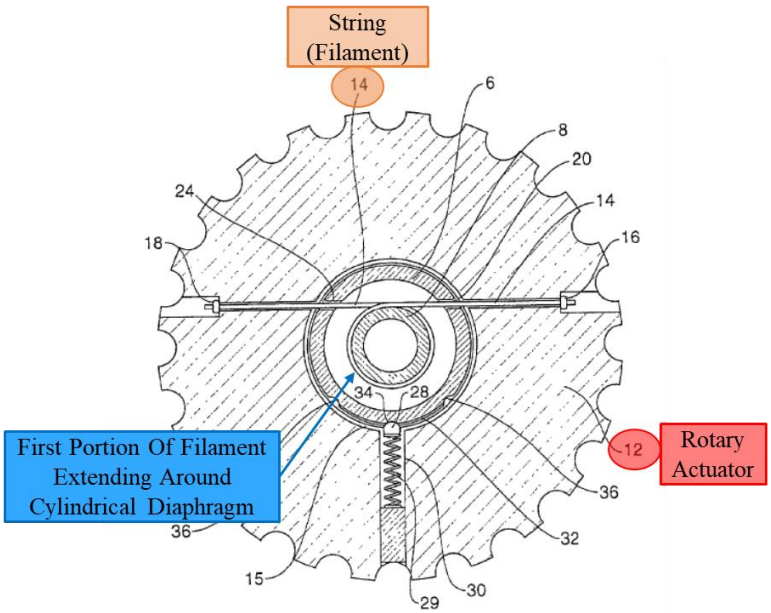

Fig 3

(Ex. 1006, [0031], Fig. 3.)

Eller's "filament" is a "wire member" secured to the actuator and housing:

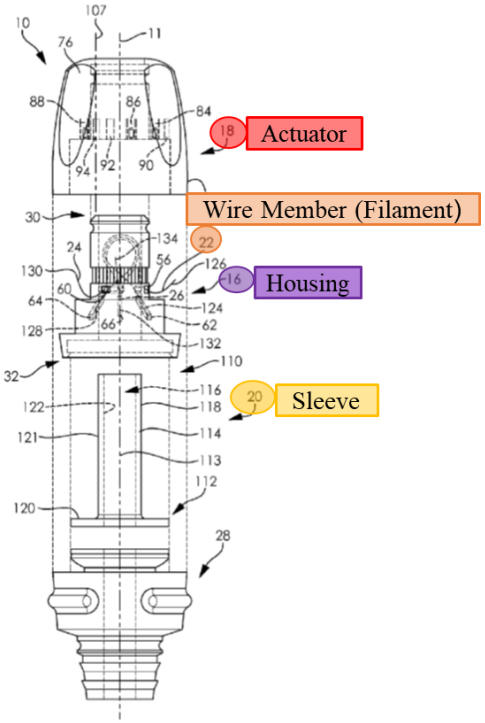

FIG. 2

(Ex. 1007, 5:1-6, Fig. 2.)

A POSITA would have been motivated, and found it obvious, to substitute Hartley's string or Eller's wire member for Schaffer's U-shaped actuating members for the reasons described below. (Ex. 1003, ¶56.) Consequently, a POSITA would have found claims 1-9 obvious over Schaffer in combination with Hartley ***or*** Eller. (*Id.*)

A. Claim 1

Schaffer anticipates claim 1 or renders claim 1 obvious alone[3] or in view of Hartley ***or*** Eller. (Ex. 1003, ¶¶57-103.)

1. Preamble

If the preamble is limiting, Schaffer, Hartley, and Eller disclose a "valve." (Ex. 1003, ¶¶58-61.)

Schaffer discloses embodiments of a "fluid stasis valve" for use with catheters to prevent the flow of fluid and/or blood through the valve during medical procedures. (Ex. 1005, [0002], [0046], [0055].)

Hartley discloses "an access valve" for use in "medical applications … where it is desired to seal around a catheter or other instrument … to prevent loss of blood or other fluid." (Ex. 1006, [0002]-[0004].)

[3] "It is well settled that a 'disclosure that anticipates under §102 also renders the claim invalid under §103, for anticipation is the epitome of obviousness.'" *Realtime Data, LLC v. Iancu,* 912 F.3d 1368, 1373 (Fed. Cir. 2019).

Eller discloses "selective fluid barrier valve devices" for procedures "that require the percutaneous insertion of one or more interventional devices into a bodily passage, such as a portion of the vascular system." (Ex. 1007, 1:14-23.)

2. <u>Tubular Member</u>

Claim 1 next recites "a tubular member defining a lumen configured to slidably receive a catheter." Schaffer discloses this limitation. (Ex. 1003, ¶¶62-63.) Schaffer's fluid stasis valve includes a "seal module 100" that comprises "a flexible, elongate tubular structure 101." (Ex. 1005, [0049], [0051], [0054], [0075].) The elongate tubular structure 101 defines a lumen 193:

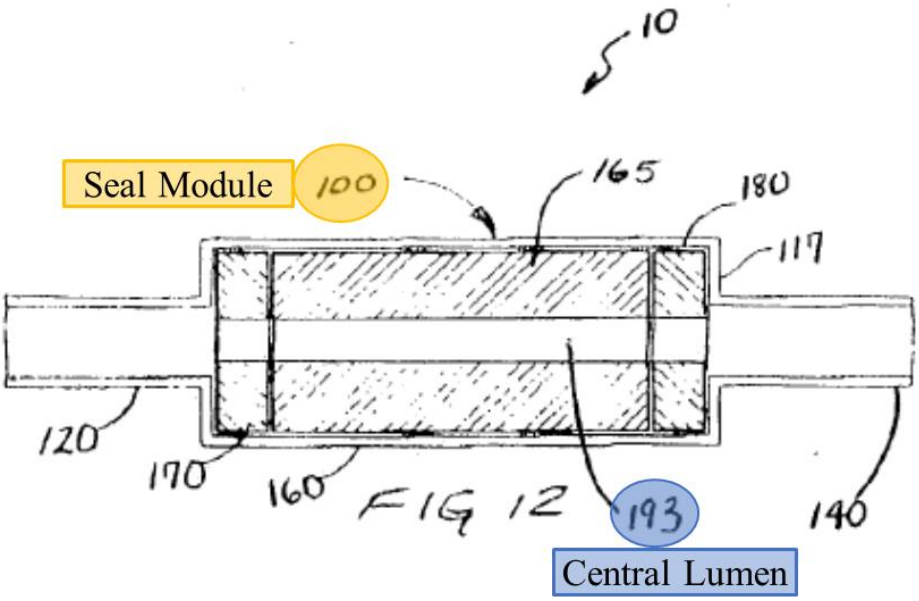

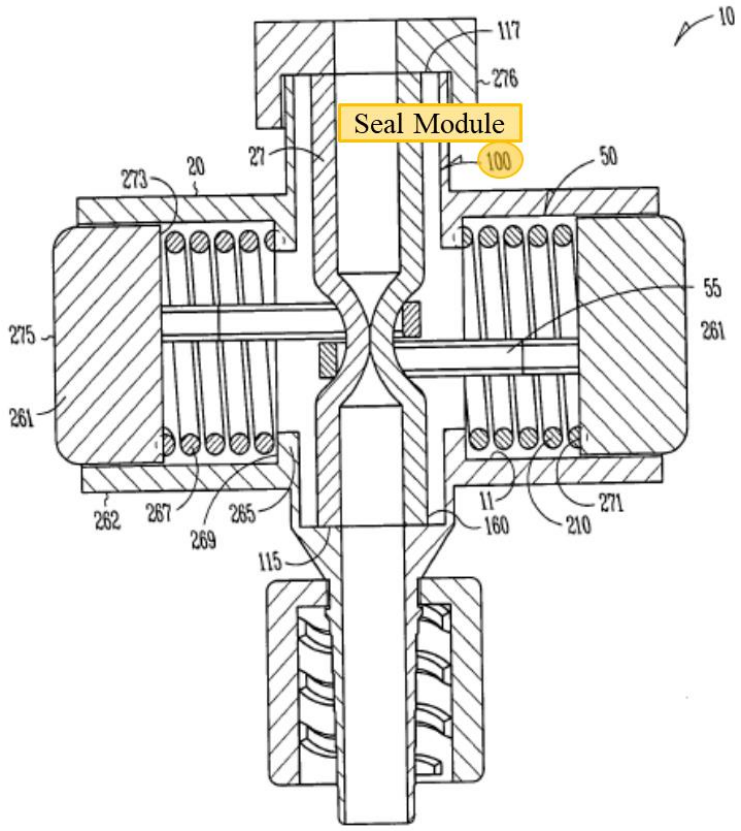

Fig. 32

(*Id.*, [0058], Figs. 12, 32.)[4] Schaffer discloses that "a range of instruments [can be] used within the seal module," such as "a catheter, guidewire, needle, or fiber." (*Id.*, [0056].) Schaffer's seal module 100 is therefore "a tubular member defining a lumen configured to slidably receive a catheter." (Ex. 1003, ¶63.)

3. <u>Constricting Mechanism</u>

Claim 1 next recites "a constricting mechanism including at least one filament and an actuator coupled to the filament, the filament comprising a first portion

[4] While Figure 12 illustrates a seal module 100 comprised of three seal members 160, 170, and 180, Schaffer discloses that "seal module 100 is formed of one or more seal members." (Ex. 1005, [0075], Figs. 32, 34.)

extending around at least a portion of the tubular member and a second portion having a first end extending from the first portion in one direction and a second end extending from the first portion in another direction, and the actuator comprises a first member coupled to the first end of the filament and a second member coupled to the second end of the filament, wherein the first member and the second member of the actuator are moveable between (a) a first position wherein the filament circumferentially constricts the lumen to create a seal and (b) a second position wherein the filament is moved to at least partially open the lumen." Schaffer discloses these limitations or renders them obvious in view of Hartley ***or*** Eller. (Ex. 1003, ¶¶64-100.)

a. <u>Actuator</u>

Schaffer discloses the actuator required by claim 1. (Ex. 1003, ¶65.) Schaffer describes a valve having "two circular actuators 50" on opposite sides of the housing that are "movable from a first position to a second position":

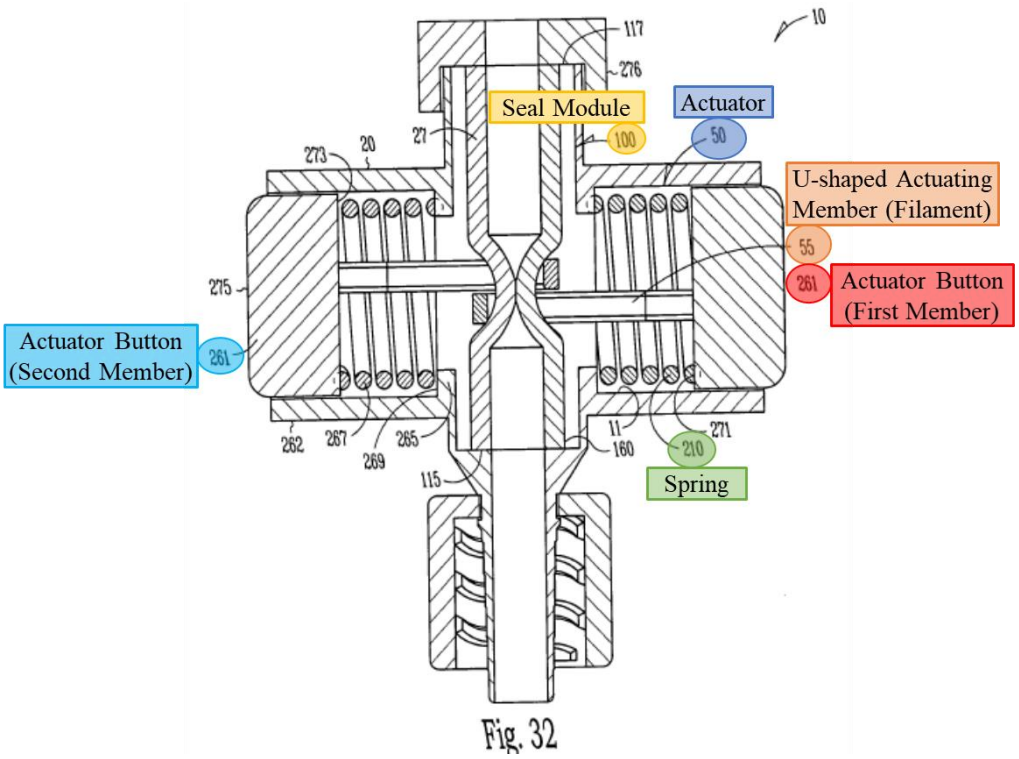

(Ex. 1005, [0075]-[0076], Figs. 31-32.) Each actuator 50 includes "an actuator button 261" and a "spring 210." (*Id.*)

While Schaffer describes the hemostasis valve in Figures 31-34 as having "two circular actuators 50," the '011 patent describes the same structure (i.e., two buttons) as a single "actuator." (Ex. 1005, [0076]; Ex. 1001, 8:24-53.) Because Schaffer's actuators 50 have the same components and function in the same way as the actuator in the '011 patent, Schaffer's collective actuators 50 form an "actuator" within the meaning of the '011 patent. (Ex. 1003, ¶66); *In re Gleave*, 560 F.3d 1331, 1334 (Fed. Cir. 2009) (holding that a prior art "reference need not satisfy an *ipsissimis verbis* test" to be anticipatory under § 102(b)); *Ex Parte Klop*, Appeal 2019-006763, 2020 WL 2473929, at *4 (P.T.A.B. May 7, 2020) ("[I]t does not

matter what [the prior art] calls the asserted structure. What matters is whether that structure constitutes [the limitation] within the meaning of the claim.”).)

Schaffer’s actuator buttons are each coupled to “an actuating member 55 which, in one option, is U-shaped.” (Ex. 1005, [0076].) As explained below, the actuator buttons are coupled to the first and second ends of the U-shaped actuating members, which are the claimed “filament.” (*Infra* §§VI.A.3.b.)

The actuator buttons are movable between a first position wherein the lumen is constricted to create a seal and a second position wherein the lumen is at least partially open. (Ex. 1003, ¶69.) Schaffer discloses that in a first position, shown in Figure 32, the actuating members are “at least partially circumferentially disposed about the portion 108 of the seal module 100 depressing and at least partially collapsing a portion 108 of the containment structure 160 by a compressive force 67 (e.g. by a spring 210)”:

First Position – Actuator Buttons Undepressed

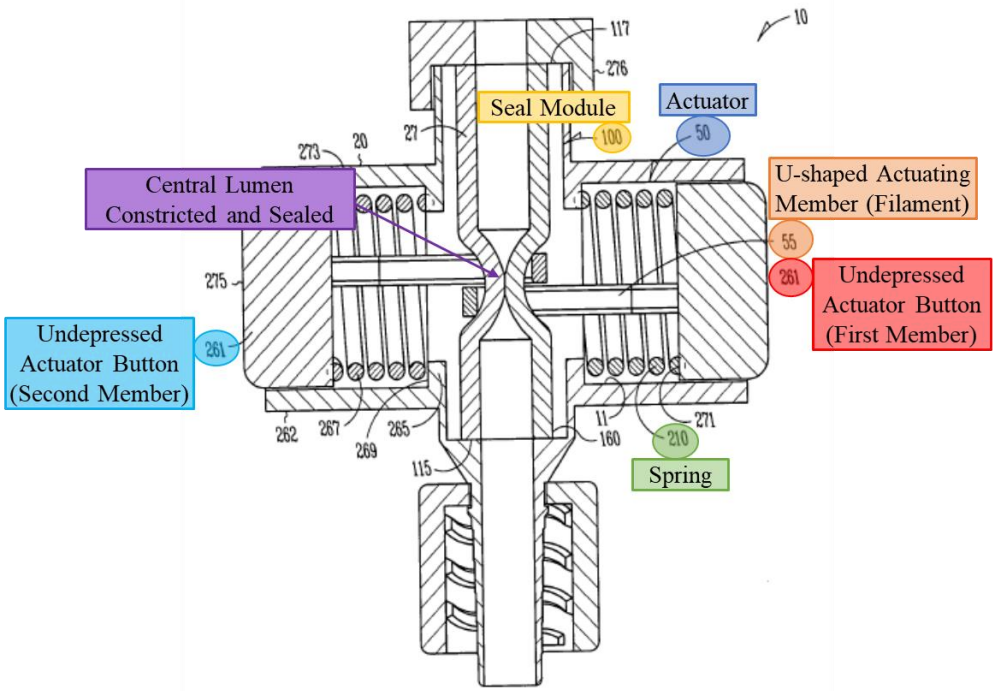

Fig. 32

(Ex. 1005, [0077], Fig. 32.) As shown in Figure 32 above, the central lumen is completely constricted and sealed in the first position. (*Id.*; *see also id.*, [0008] (disclosing that Schaffer's valve "blocks the flow of gas or fluid completely and immediately with or without an instrument in place within the gas/fluid path"); Ex. 1003, ¶69.) In a second position, shown in Figure 34 below, the actuator buttons are pressed inwardly, compressing the springs and allowing the actuator members to "disengage opposing outer walls 27 of the seal module 100 allowing the portion 108 of the containment structure 160 to retract to an uncollapsed configuration where gasses and fluids can pass therethrough":

Second Position – Actuator Buttons Depressed

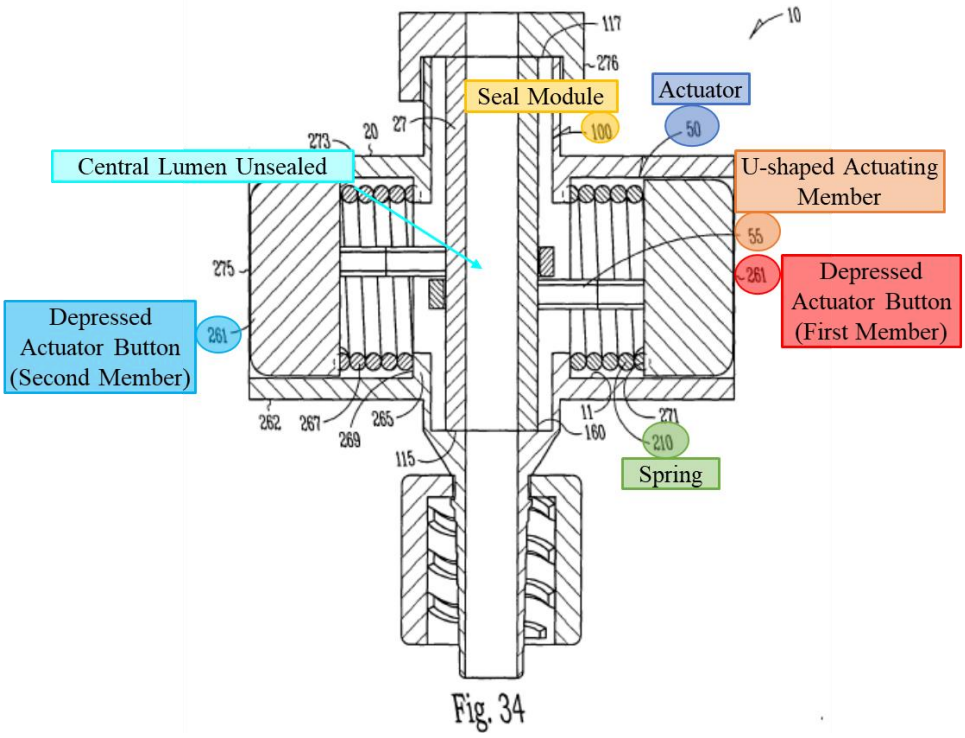

Fig. 34

(Ex. 1005, [0077], Fig. 34.) Schaffer's actuator buttons are therefore a "first member" and "second member" as claimed in the '011 patent. (Ex. 1003, ¶¶67-69.)

b. <u>Filament</u>

i. <u>Schaffer</u>

Schaffer discloses the filament required by claim 1. (Ex. 1003, ¶¶70-75.) Schaffer's valve includes two U-shaped actuating members coupled to the actuator buttons:

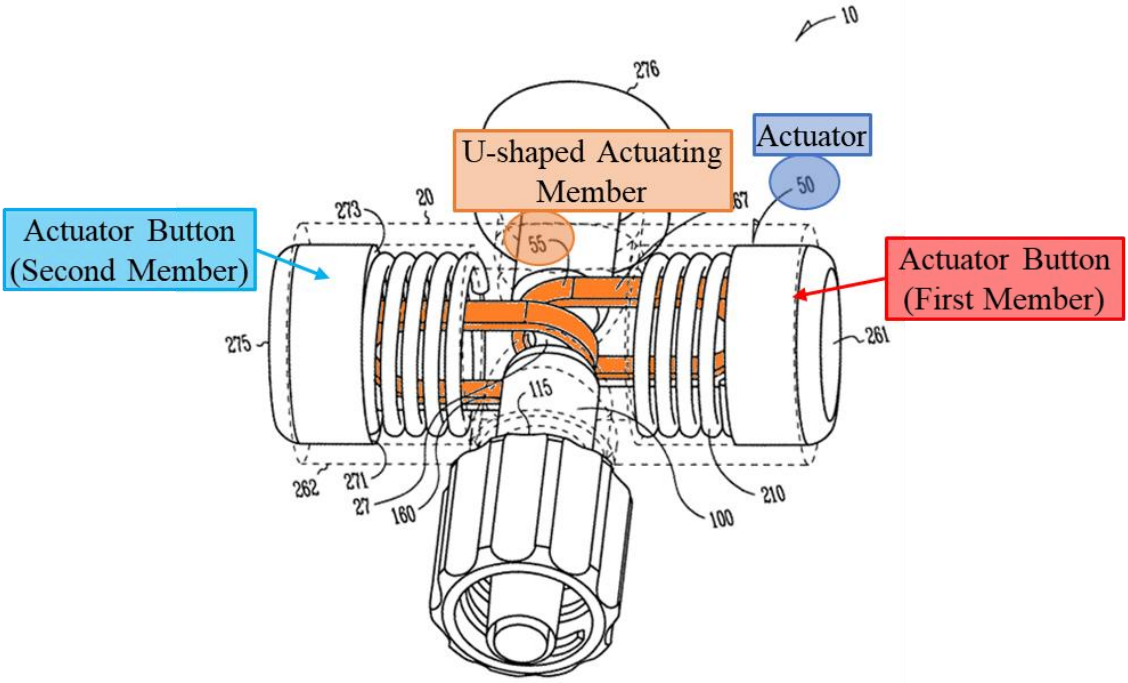

Fig. 31

(Ex. 1005, [0076], Fig. 31.) Schaffer's U-shaped actuating members are a "filament" as claimed in the '011 patent. (*Supra* §IV; Ex. 1003, ¶70.)

Schaffer's actuating members are formed from aluminum or plastic, and resemble a ribbon, flat wire, sheet, or tape. (Ex. 1005, [0081], Figs. 31-34; Ex. 1003, ¶71.) The '011 patent states that the filament can be made from a polymer, which includes Schaffer's plastic, or a metal, which includes Schaffer's aluminum. (*Supra* §IV.) Likewise, the '011 patent states that a filament may be a ribbon, flat wire, sheet, or tape, which includes Schaffer's U-shaped actuating members. (*Id.*; Ex. 1003, ¶71.)

That Schaffer uses two separate actuating members is of no moment here. The '011 patent discloses that the "**<u>the filament 150</u>** can comprise multiple filaments," including filaments forming two U-shapes:

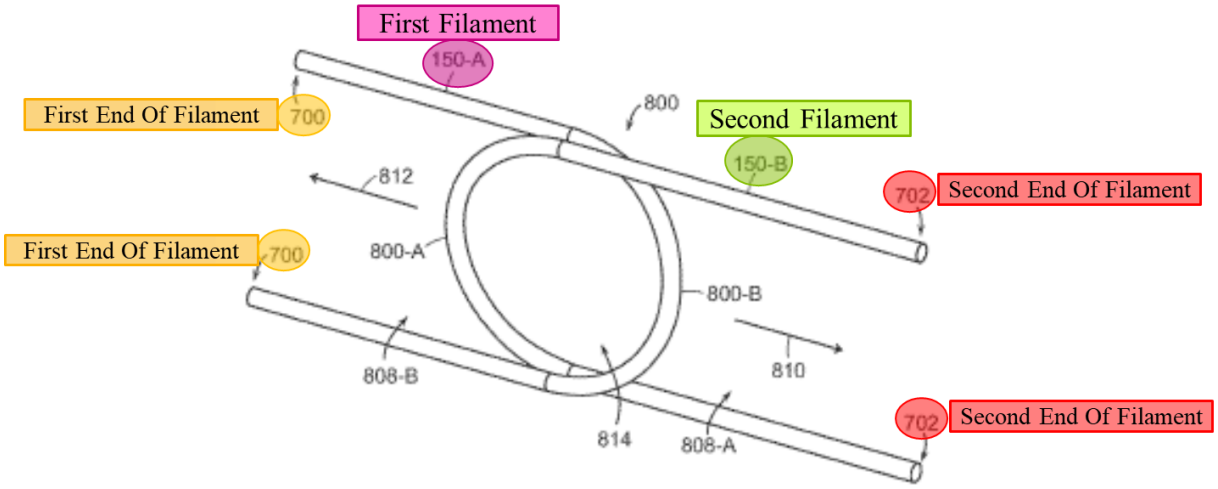

FIG. 8

(Ex. 1001, 13:6-28, Fig. 8 (emphasis added).) Accordingly, Schaffer's U-shaped actuating members collectively constitute the "at least one filament" disclosed and claimed in the '011 patent. (Ex. 1003, ¶72); *see also Sandisk Corp. v. Kingston Tech. Co., Inc.*, 695 F.3d 1348, 1360 (Fed. Cir. 2012) (explaining that "the later use of 'the' … to refer back to an earlier claim term does not limit that claim term to the singular"); *Biagro W. Sales, Inc. v. Grow More, Inc.*, 423 F.3d 1296, 1304 (Fed. Cir. 2005) ("The phrase 'at least one' in patent claims typically is construed to mean 'one or more.'").

Schaffer's actuating members are "at least partially circumferencially [sic] disposed about the portion of the seal module 100." (Ex. 1005, [0076].) The portion of the actuating members circumferentially disposed about the seal module is a "first portion [of the filament] extending around at least a portion of the tubular member":

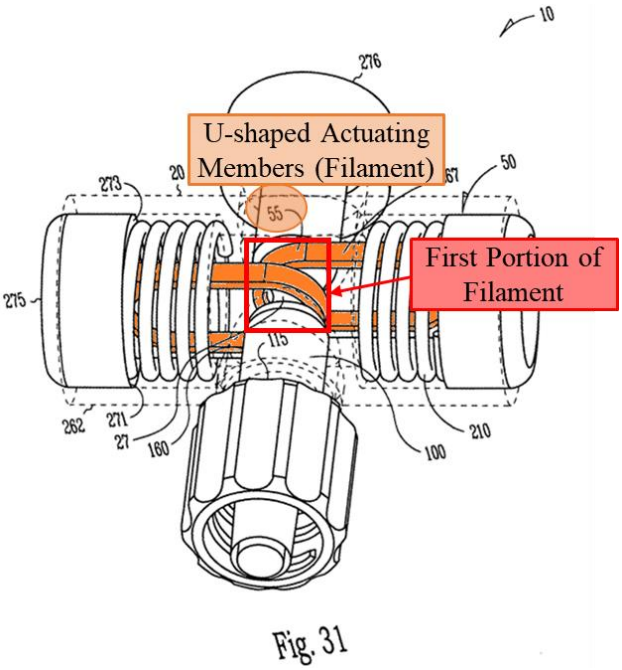

(*Id.*, [0076], Fig. 31; Ex. 1003, ¶73.) The portions of the actuating members that extend in opposite directions from the seal module 100 are a "second portion" of the filament:

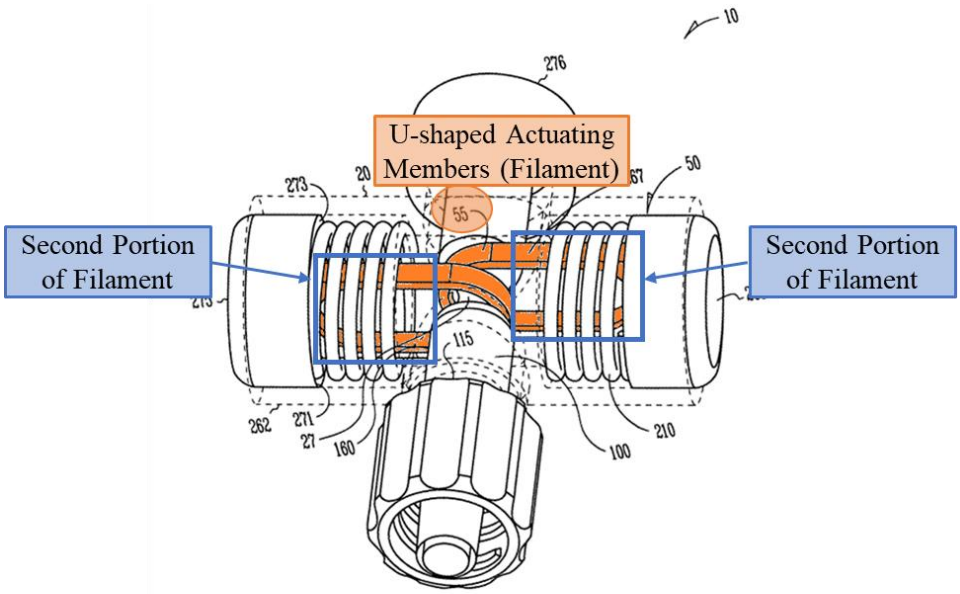

Fig. 31

(Ex. 1005, Fig. 31; Ex. 1003, ¶73.)

The ’011 patent discloses that where “**<u>the filament 150</u>** comprises multiple filaments, each of the multiple filaments can have a **<u>first end 700</u>** and a **<u>second end 702</u>**”:

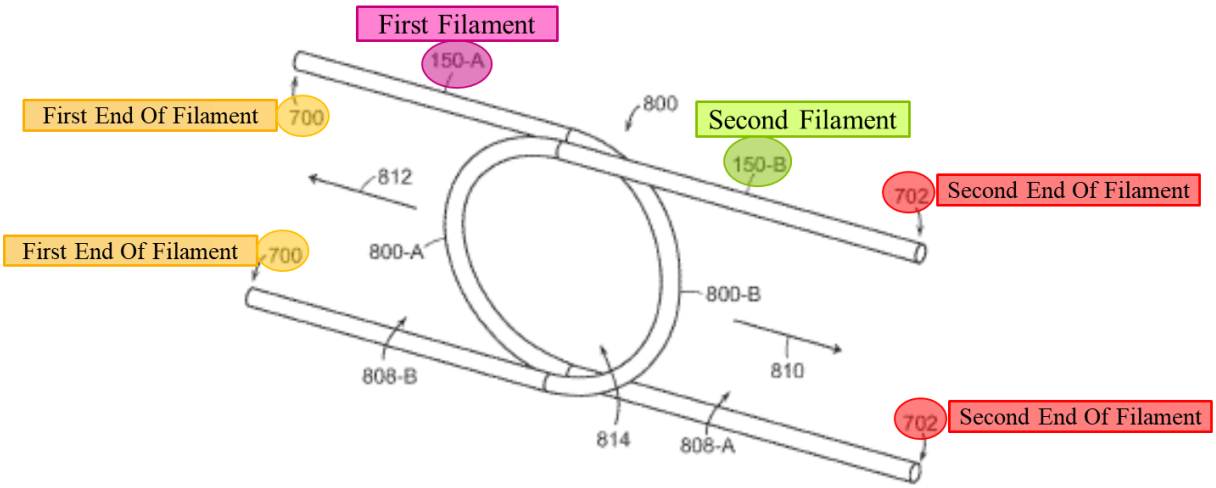

FIG. 8

(Ex. 1001, 13:9-12, Fig. 8 (emphasis added).) Thus, the second portion of Schaffer's U-shaped actuating members includes a "first end" coupled to the first actuator button (first member) and a "second end" coupled to the second actuator button (second member) as disclosed and claimed in the '011 patent:

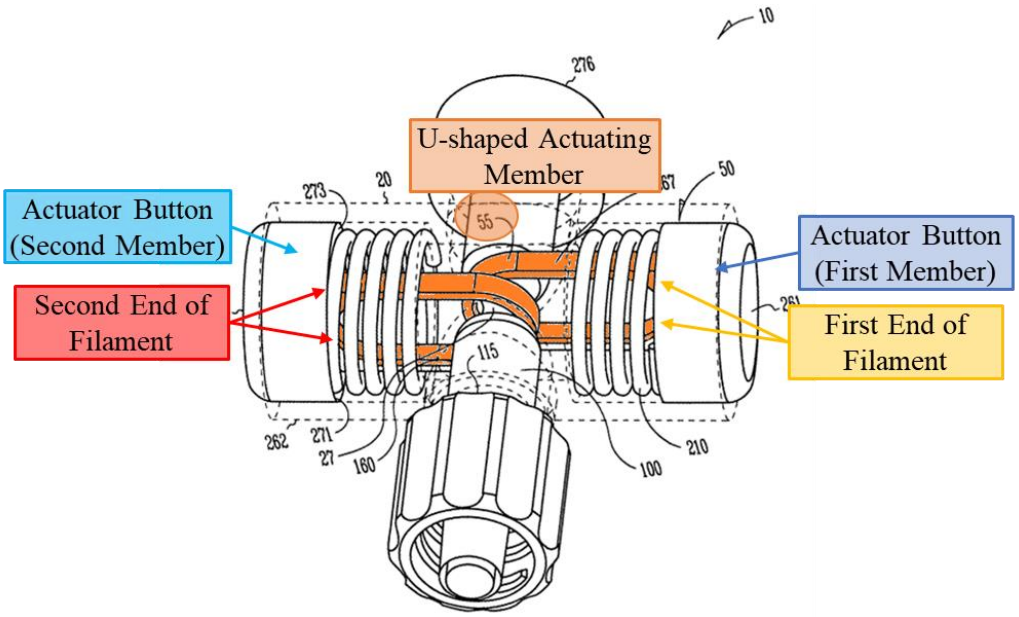

Fig. 31

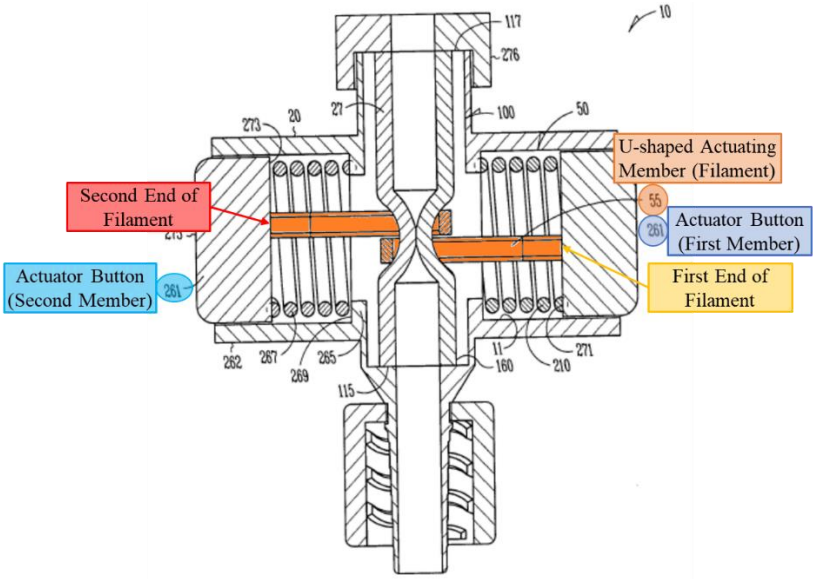

Fig. 32

(Ex. 1005, [0076], Figs. 31-32; Ex. 1003, ¶74.)

Even if the Board were to conclude that Schaffer's U-shaped actuating members do not "circumferentially constrict[] the lumen [of Schaffer's valve] to create a seal" as claimed in the '011 patent, a POSITA would have found it obvious to modify the U-shaped actuating members to closely conform to the seal module to circumferentially constrict the lumen. (Ex. 1003, ¶75.) POSITAs would have been motivated to do so to form a better seal and avoid the potential gaps discussed in the following section. (*Infra* §VI.A.3.b.ii.) Notably, Schaffer's description of the U-shaped actuating members as "at least partially circumferencially [sic] disposed about the portion 108 of the seal module 100" already suggests actuating members that are completely circumferentially disposed around the seal module. (Ex. 1005, [0077]; Ex. 1003, ¶75.) Moreover, POSITAs would have possessed the skill and knowledge to adjust the shape, material, and/or dimensions of Schaffer's U-shaped actuating members to closely conform to the circumference of the cylindrical seal module. (Ex. 1003, ¶75.) POSITAs would have had extensive experience with the materials (e.g., plastic, aluminum) and components (e.g., ribbon, flat wire) described in Schaffer and these simple components would have behaved predictably. (*Id.*) As an example, POSITAs could have selected a thin, flexible sheet or flat ribbon of aluminum or plastic to form the actuating members. (*Id.*) Such members would have had the flexibility to conform to the outer surface of the cylindrical seal module.

(*Id.*) Such actuating members would extend circumferentially around the outside of Schaffer's seal module and would therefore circumferentially constrict the lumen when pulled in opposite directions by the actuator buttons. (*Id.*)

ii. <u>Hartley</u>

Hartley also discloses a filament as required by claim 1, even if the Board does not adopt the construction of "filament" expressly articulated in the specification and, instead, adopts a narrower construction. (Ex. 1003, ¶¶76-88.) Hartley describes a hemostasis valve having a cylindrical housing that holds a "cylindrical elastomeric diaphragm" and a rotatory actuator mounted to the housing:

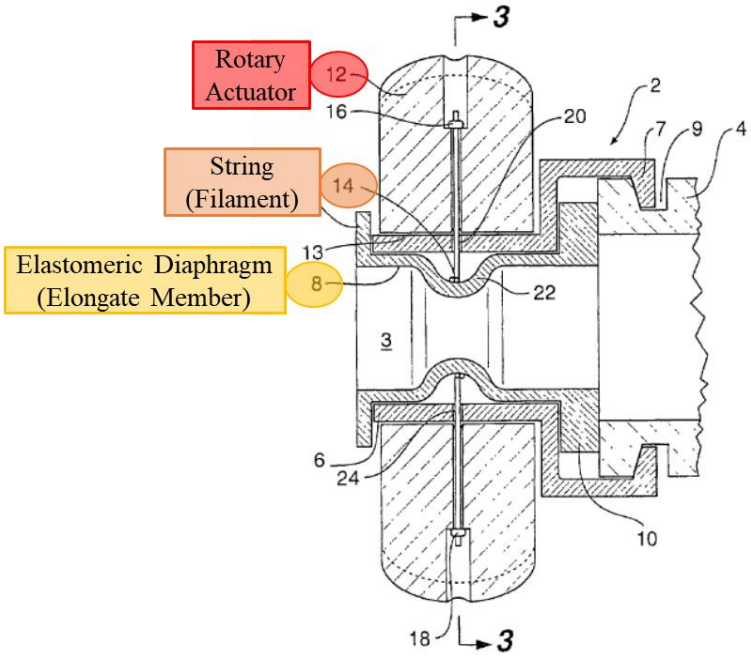

Fig 1

(Ex. 1006, [0031], Fig. 1.) Hartley's valve also includes a "string 14 … mounted into the rotary actuator." (*Id.*) Hartley's string 14 is a "filament" because a string is

made of at least one or more threads or lines. (Ex. 1003, ¶76; *see* Ex. 1001, 9:18-20 ("the filament 150 can comprise one or several threads, lines, cords, rope, ribbon, flat wire, sheet, or tape."); *supra* §IV.)

As illustrated in Figure 3, Hartley's string is secured to the rotary actuator at a first end via a knot 16 and "then passes through an aperture 20 in the cylindrical housing 6 and then is wound preferably twice around the cylindrical diaphragm 8 … and then passes through a further aperture 24 in the cylindrical housing before being fixed by knot 18 again in the rotary actuator":

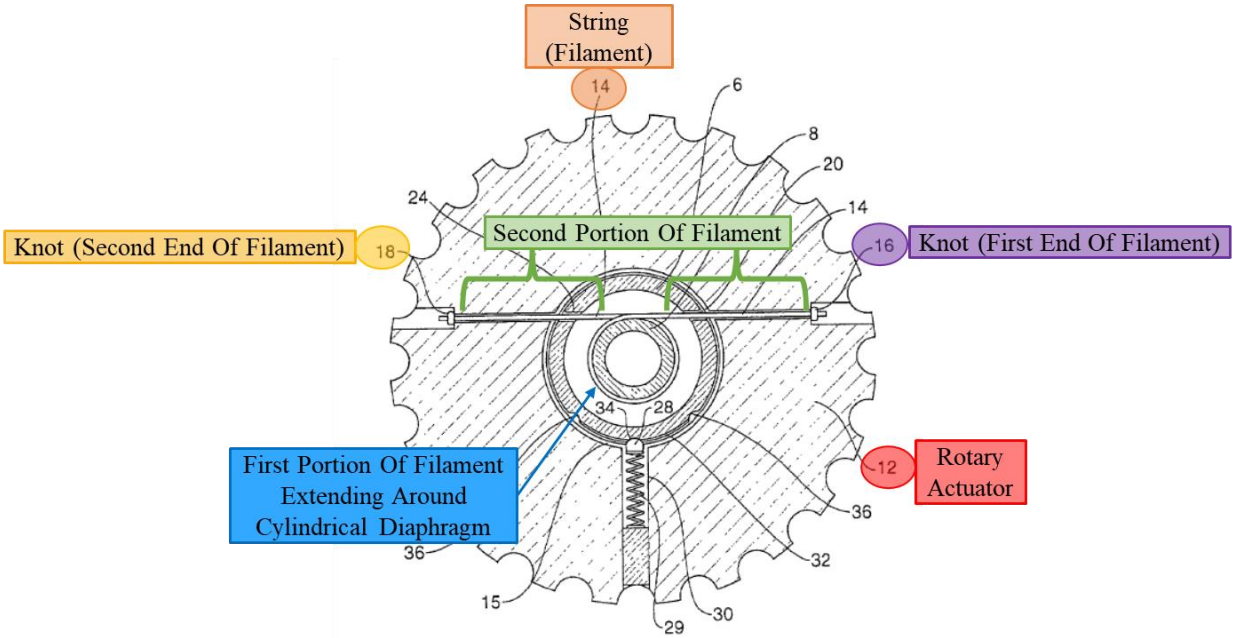

Fig 3

(Ex. 1006, [0031], Fig. 3.) Thus, Hartley's string satisfies the portions of claim 1 requiring "a first portion extending around at least a portion of the tubular member" and "a second portion having a first end extending from the first portion in one

direction and a second end extending from the first portion in another direction." (*Id.*; Ex. 1003, ¶77.)

Hartley discloses that "[r]otation of the rotary actuator 12 with respect to the cylindrical housing 6 will cause the string 14 to be pulled in both directions at once and hence the cylindrical diaphragm 8 to be constricted." (Ex. 1006, [0031], [0034], Fig. 4.) Hartley further discloses that its valve "will close over a range of diameters of devices passed through the valve or can close completely down to be self sealing." (*Id.*, [0037].)

POSITAs would have found it obvious to substitute Hartley's string for Schaffer's U-shaped actuating members. (Ex. 1003, ¶80.) The combination of Hartley's string and Schaffer's valve would merely entail substitution of one known element (Hartley's string) for another (Schaffer's U-shaped actuating members) to yield the predictable results of constricting the central lumen of Schaffer's valve to form a seal. *See KSR Int'l Co. v. Teleflex, Inc.*, 550 U.S. 398, 416 (2007).

Hartley's disclosure that its string can "close over a range of diameters of devices passed through the valve or can close completely down to be self sealing" would have further motivated POSITAs to substitute Hartley's string for Shaffer's U-Shaped actuating members. (Ex. 1006, [0037]; Ex. 1003, ¶80.) POSITAs would have recognized that Hartley's string may seal more effectively across a wider range of diameters for the inserted devices (e.g., other catheters or tools) than Schaffer's

U-shaped actuating members. (Ex. 1003, ¶81.) Depending on the diameter of the inserted device, Schaffer's U-shaped actuating members may form small gaps between the valve's lumen and the outer surface of the device.

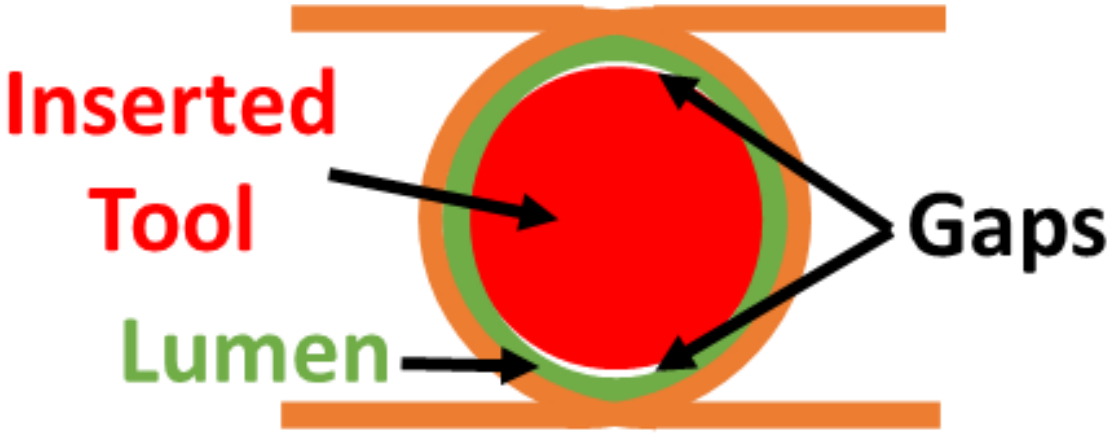

(*Id.*) Hartley's flexible string would not suffer from this potential issue because the string encircles the central lumen and precisely conforms to the diameter of the inserted devices. (*Id.*)

Moreover, POSITAs had a finite number of materials to select from to constrict the lumen of a tubular member in a hemostasis valve in 2017. (Ex. 1003, ¶83.) Hartley and Schaffer disclose two such options: Hartley's string and Schaffer's two U-shaped actuating members formed from aluminum or plastic. (*Id.*) Eller discloses a third option: one or more wire members. A POSITA would have found it obvious to select from these finite, predictable options and, as discussed below, would have had a reasonable expectation of success in implementing them. (*Id.*); *KSR*, 550 U.S. at 421.

POSITAs would have had a reasonable expectation of success in substituting Hartley's string for Schaffer's U-shaped actuating members. (Ex. 1003, ¶¶84-88.) Hartley teaches a simple method of attaching the string to the rotary actuator –a knot at each end of the string. (Ex. 1006, [0031]; Ex. 1003, ¶84.) POSITAs would have reasonably expected that knots could also be used to secure the ends of Hartley's string to Schaffer's actuator buttons. (Ex. 1003, ¶84.) For example, small holes could be made in each of Schaffer's actuator buttons, and each end of the string could be threaded through the hole on the opposite buttons and knotted on the other side. (*Id.*) Such a modification would have been very simple and well within a POSITA's skills. (*Id.*) As illustrated below, the first end of the string would be secured to the first actuator button (first actuator member), the string would loop at least once around the lumen of Schaffer's valve, and then the second end of the string would be secured to the second actuator button (second actuator member) on the opposite side of the valve[5]:

[5] This image reflects a demonstrative prepared by Petitioner. All modifications to the figure have been made by Petitioner.

Demonstrative Illustration
Schaffer + Hartley's String

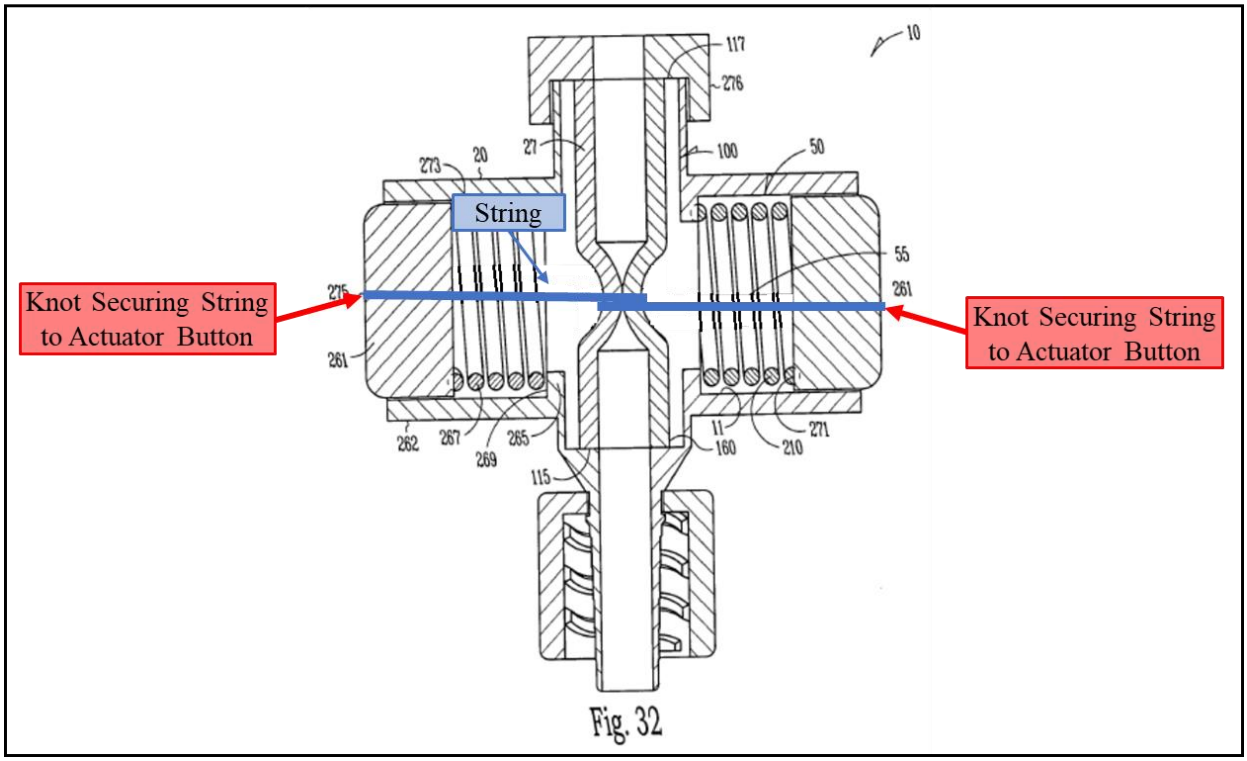

(*Id.*)

Also, POSITAs would have recognized that Hartley's string and Schaffer's U-shaped actuating members function in similar ways and, therefore, no other modifications to Schaffer's valve would be necessary. (Ex. 1003, ¶85.) Hartley collapses the valve lumen to seal the valve by pulling the ends of the string in opposite directions. (Ex. 1006, [0031].) Schaffer also collapses the valve lumen to seal the valve by pulling the U-shaped actuating members in opposite directions. (Ex. 1005, [0077].) Thus, if Hartley's string were incorporated into Schaffer's valve, a POSITA would have reasonably expected Schaffer's springs to pull the ends of the

string in opposite directions in the first position, which would cause the string to constrict and collapse the lumen of Schaffer's valve. (*See* Ex. 1005, [0077]; Ex. 1006, [0031]; Ex. 1003, ¶86.)

A POSITA would have also reasonably expected that pressing Schaffer's buttons inwardly (i.e., second position) would release the tension on the string, causing the string to loosen around the central lumen and allowing the lumen to at least partially open. (*See* Ex. 1005, [0077]; Ex. 1006, [0034]; Ex. 1003, ¶87.) Schaffer discloses that the seal module is made from a "highly deformable, non-compressible material 166 (e.g., plastic)" and is "configured to maintain an open lumen 193 when no compressive force 67 is applied." (Ex. 1005, [0054].) A POSITA would have therefore expected Schaffer's lumen to return to its open configuration when the actuator buttons are pressed inwardly, and the tension on the string is released such that "no compressive force [] is applied" to the lumen. (*Id.*; Ex. 1003, ¶87.) Moreover, if the resiliency of Schaffer's lumen required adjustment to function with Hartley's string, a POSITA would have possessed the skills and knowledge to select an appropriate material (e.g., plastic) with the proper resiliency. (Ex. 1003, ¶88.) The prior art disclosed a range of suitable materials for the lumen of a hemostasis valve. (Ex. 1006, [0008], [0016]; Ex. 1003, ¶88.) For example, Schaffer discloses that the materials for the lumen can include "modified vinyl, silicone, polyurethane or a combination thereof," as well as modifications of those

materials with "waxes and/or oils or un-cross-linked modifiers." (Ex. 1005, [0081].) Similarly, Eller discloses a variety of sleeves made from "NuSil MED-4755, NuSil MED-4765, and NuSil MED-4014." (Ex. 1007, 36:27-60.)

For these reasons, Schaffer combined with Hartley would render the device of claim 1 obvious, even if the Board does not construe "filament" as set forth in the '011 patent specification.

iii. <u>Eller</u>

Eller also discloses a "filament" as required by claim 1, even if the Board does not adopt the construction of "filament" expressly articulated in the specification and, instead, adopts a narrower construction. (Ex. 1003, ¶89.) Eller discloses a fluid barrier valve that includes "a housing 16, an actuator 18, a sleeve 20, [and] a first wire member 22":

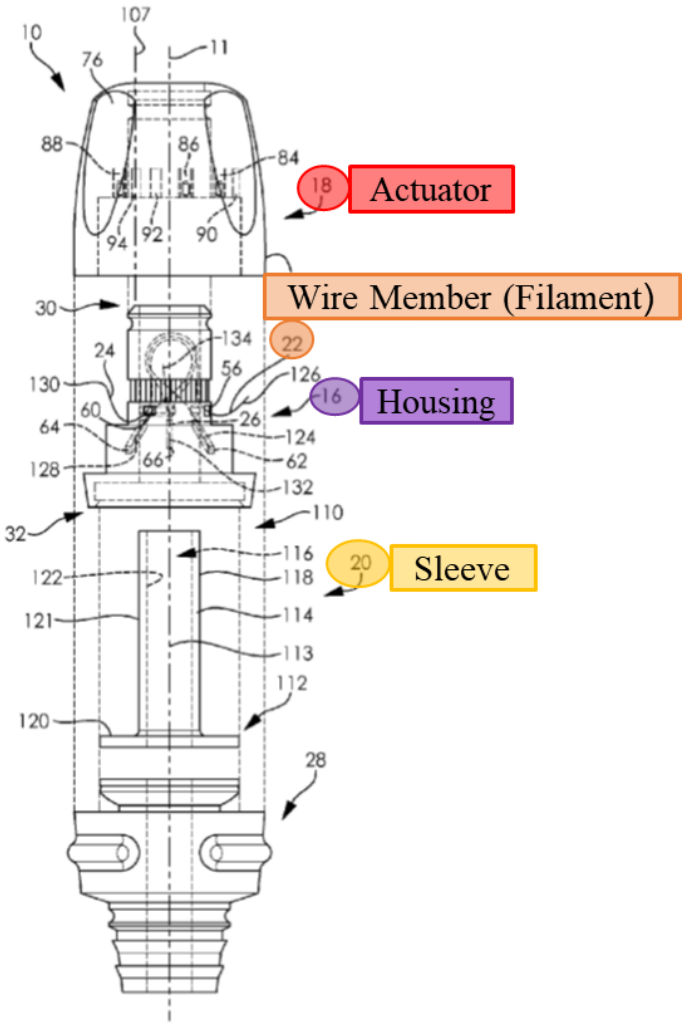

FIG. 2

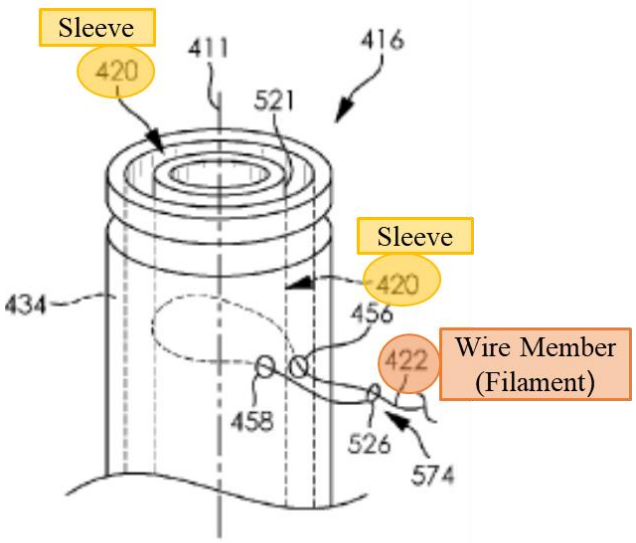

FIG. 16

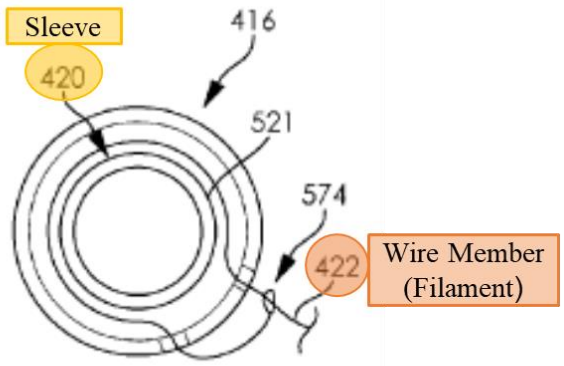

FIG. 17

(Ex. 1007, 5:1-5, 16:7-19, 21:37-22:31, 23:50-25:9, Figs. 2,[6] 15-16.) Eller's wire member is a filament. (Ex. 1003, ¶90.) Eller discloses that the wire member "can be formed of any suitable material and using any suitable manufacturing technique, and skilled artisans will be able to select a suitable material and technique to form a wire member according to a particular embodiment based on various considerations including the material(s) that form the sleeve of an embodiment." (Ex. 1007, 15:41-47.) Eller further disclose that the wire member can have a range of compositions (e.g., braided materials, twisted materials), be formed from a range of materials (e.g., metals, flexible materials), and have a range of shapes (e.g., round, rectangular). (*Id.*, 15:47-16:6.) Thus, the wire member is a "filament" at least because the wire member is made of at least one or more threads, lines, cords, rope, ribbon, flat wire,

[6] Eller's Figure 2 shows an exploded view of the device. (Ex. 1007, 2:46-47.)

sheet, or tape. (Ex. 1003, ¶90; *see* Ex. 1001, 9:18-20 ("the filament 150 can comprise one or several threads, lines, cords, rope, ribbon, flat wire, sheet, or tape."); *supra* §IV.)

The wire member has a first end 124 attached to the housing 16 and a second end 126 attached to the actuator 18. (Ex. 1007, 12:52-58.) The wire member extends from its first end, around the outer surface of the sleeve 20, to its second end:

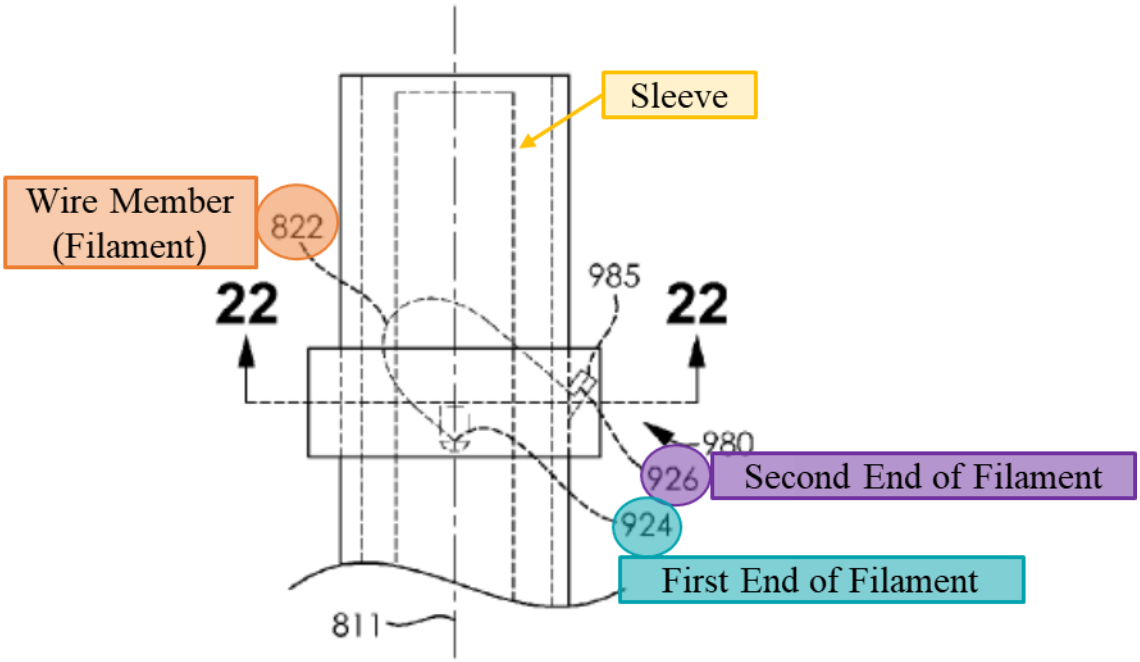

FIG. 21

(*Id.*, 12:58-64, 24:50-57, Fig. 21.) Eller's wire member is "moveable between a first configuration and a second configuration." (*Id.*, 15:21-25.) In the first configuration, the wire member is in a relaxed state and fluid is permitted to flow through the sleeve. (*Id.*, 15:21-40, 17:38-43.) In the second configuration, rotational force from the actuator places the wire member in a tensioned state, causing the wire

member to constrict the sleeve and prevent fluid from passing through the sleeve. (*Id.* 15:21-40, 17:62–67.) Eller further discloses that "when one or more medical devices are passed through the passageway 116 defined by the sleeve 20, the material that forms the sleeve 20 contacts a portion of one or more of the medical devices to close the passageway 116 such that fluid is prevented from passing through the passageway 116." (*Id.*, 18:3-8.)

A POSITA would have found it obvious to substitute Eller's wire member for Schaffer's U-shaped actuating members. (Ex. 1003, ¶93.) The combination of Eller's wire member and Schaffer's valve would merely entail substitution of one known element (Eller's wire member) for another (Schaffer's U-shaped actuating members) to yield the predictable results of constricting the central lumen of Schaffer's valve to form a seal. *See KSR*, 550 U.S. at 416.

Eller's disclosure that the wire member can form a seal around one or more medical devices passed through the valve to prevent fluid from leaking around the device would have further motivated POSITAs to substitute Eller's wire member for Shaffer's U-Shaped actuating members. (Ex. 1007, 15:21-40, 17:38-43, 18:3-8; Ex. 1003, ¶93.) As discussed above for the Schaffer-Hartley combination, POSITAs would have recognized that Eller's wire may seal more effectively across a wider range of device diameters than Schaffer's U-shaped actuating members because the

wire encircles the central lumen and precisely conforms to the diameter of the inserted devices. (*Supra* §VI.A.3.b.ii; Ex. 1003, ¶94.)

As also discussed in the Schaffer-Hartley combination, POSITAs had a finite number of materials to select from to constrict the lumen of a hemostasis valve existed in 2017. (*Supra* §VI.A.3.b.ii; Ex. 1003, ¶96.) A POSITA would have found it obvious to select from these finite, predictable options, including Eller's wire, and would have had a reasonable expectation of success in implementing them. (*Id.*)

A POSITA would have had a reasonable expectation of success in substituting Eller's wire member for Schaffer's U-shaped actuating members for several reasons. (Ex. 1003, ¶¶97-100.) First, Eller discloses that the "[a]ttachment between a wire member and a housing and/or actuator can be accomplished using any suitable method or technique, and skilled artisans will be able to select a suitable method or technique to attach a wire member to a housing and/or an actuator according to a particular embodiment based on various considerations, including the material(s) that forms the wire member." (Ex. 1007, 14:37-43.) Eller further provides several exemplary means for securing its wire member to an actuator, "including using adhesive, welding, fusing, providing a friction fit between the wire member and the … actuator, and any other method or technique considered suitable for a particular embodiment." (*Id.*, 14:43-49.) POSITAs would have reasonably expected success in securing Eller's wire member to Schaffer's actuator buttons using one or more of

these simple methods. (Ex. 1003, ¶97.) For example, as illustrated below, the first end of the wire member would be secured to the first actuator button (first actuator member), the wire member would loop at least once around the lumen of Schaffer's valve, and then the second end of the wire member would be secured to the second actuator button (second actuator member) on the opposite side of the valve[7]:

Demonstrative Illustration
Schaffer + Eller's Wire Member

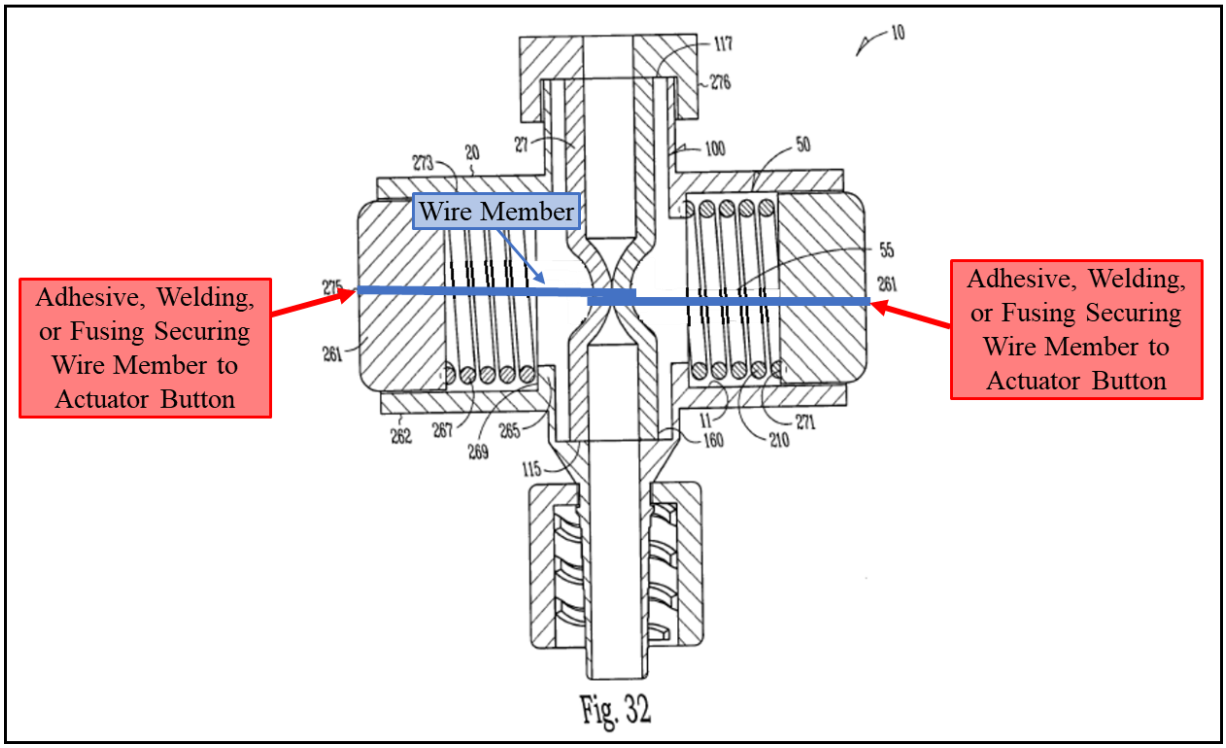

(*Id.*)

[7] This image reflects a demonstrative prepared by Petitioner. All modifications to the figure have been made by Petitioner.

Second, Eller discloses that its wire member may be used with "any suitable actuator capable of moving the selective fluid barrier valve device between a first configuration and a second configuration" and that "[s]killed artisans will be able to select a suitable actuator to include on a selective fluid barrier valve device according to a particular embodiment based on various considerations, including the number of wire members included in the selective fluid barrier valve device and/or the structural arrangement of the housing." (Ex. 1007, 8:27–39.) Eller discloses that suitable actuators include "rotatable actuators, linear actuators, slidable actuators, pivotable actuators, levers, and any other actuator considered suitable for a particular embodiment." *Id.*, 8:39–44 (emphasis added). Given this disclosure, POSITAs would have reasonably expected Eller's wire member to work with Schaffer's buttons, which are linear and/or slidable actuators. (Ex. 1003, ¶98.)

Third, POSITAs would have recognized that Eller's wire member and Schaffer's U-shaped actuating members function in a similar manner to compress the central lumen of the valves. (Ex. 1003, ¶99.) Eller's valve creates a seal by moving the actuator from a first position to a second position. The movement causes the wire member to constrict the sleeve. (Ex. 1007, 15:21-40, 17:47-18:3.) Schaffer also includes an actuator that moves between two positions to create a seal by causing the U-shaped actuating members to constrict the tubular member. (Ex. 1005, [0077].) Thus, Eller and Schaffer both create a seal by pulling the

wire/actuating members in opposite directions to constrict/compress the central lumen of the valve. (*See* Ex. 1005, [0077], Ex. 1007, 15:21-40, 17:47-18:3; Ex. 1003, ¶99.)

POSITAs would have recognized that Eller's wire member would function like the U-shaped actuating members in Schaffer's valve. (Ex. 1003, ¶100.) In the first position, the springs coupled to Schaffer's actuator buttons would pull the ends of the wire member in opposite directions, thereby causing the wire member to constrict the lumen of Schaffer's tubular member. (*See* Ex. 1005, [0077]; Ex. 1007, 15:21-40, 17:47-18:3; Ex. 1003, ¶100.) When Schaffer's actuator buttons are pressed inwardly, the tension on the wire member would be relaxed, causing the wire member to loosen around the central lumen and allowing the lumen to at least partially open. (*See* Ex. 1005, [0077]; Ex. 1007, 15:21-40, 17:47-18:3; Ex. 1003, ¶100.) Schaffer discloses that the seal module is formed from a "highly deformable, non-compressible material 166 (e.g., plastic)" and is "configured to maintain an open lumen 193 when no compressive force 67 is applied." (Ex. 1005, [0054].) A POSITA would have therefore expected that Schaffer's lumen would have the resilience to return to open configuration when the actuator buttons are pressed inwardly, and the tension on the wire member is released such that "no compressive force [] is applied" to the lumen." (*Id.*; Ex. 1003, ¶100.) Further, as explained with respect to the Schaffer-Hartley ground, if the resiliency of Schaffer's lumen required

adjustment to function with Eller's wire, a POSITA would have possessed the skills and knowledge to select an appropriate material with the proper resiliency. (*Supra* §VI.A.3.b.ii.)

For these reasons, Schaffer combined with Eller renders the device of claim 1 obvious, even if the Board does not construe "filament" as set forth in the '011 patent specification.

4. <u>Biasing System</u>

Schaffer discloses "a biasing system configured to bias the first member and the second member to the first position." (Ex. 1003, ¶¶101-103.)

Schaffer's stasis valve includes "two resilient members 267 (e.g., spring 210) disposed within the actuating member 55":

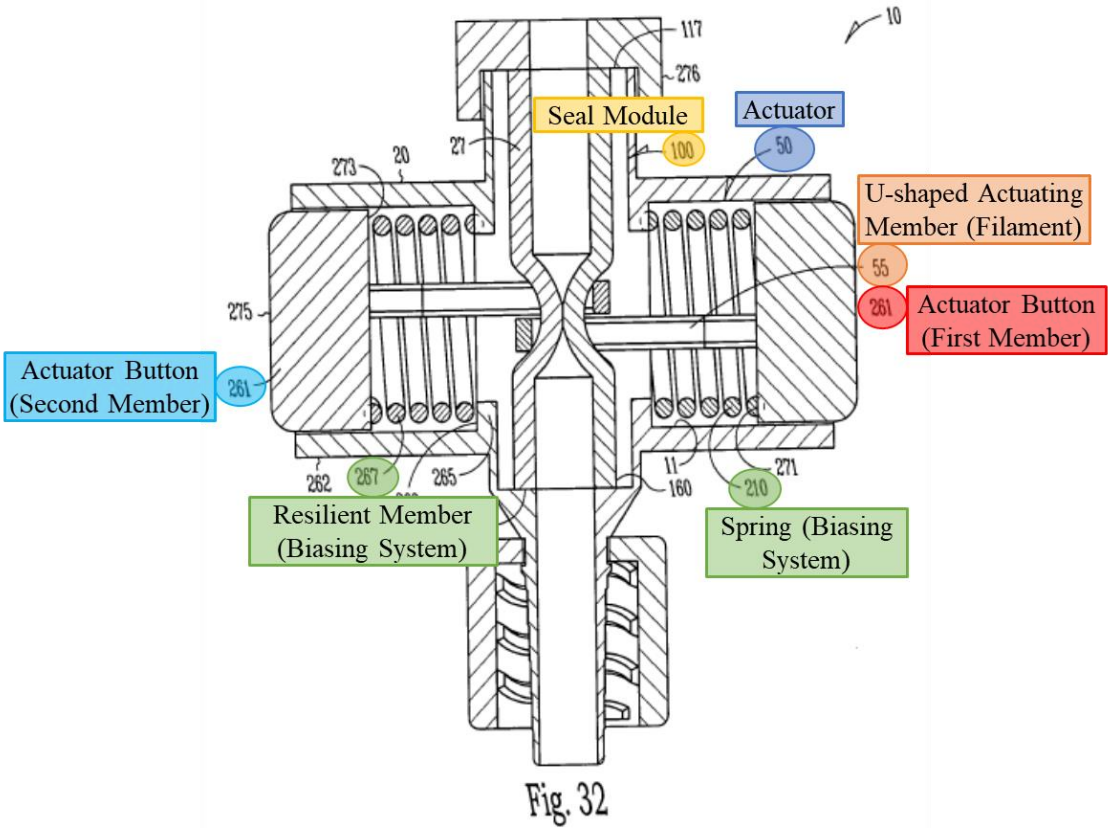

Fig. 32

(Ex. 1005, [0076], Fig. 31.) Schaffer's resilient members/springs are a "biasing system configured to bias the first member and the second member to the first position." (Ex. 1003, ¶102.) Schaffer's resilient members bias Schaffer's actuator buttons (first and second members) toward the first (i.e., closed) position, which in turn causes the actuating members attached to the buttons to collapse the seal module, preventing the flow of fluid through the valve. (Ex. 1005, [0077]; Ex. 1003, ¶103.)

B. Claim 2

Claim 2 recites "the "valve of claim 1 wherein the tubular member is pliable." Schaffer anticipates claim 2 or renders claim 2 obvious alone or in view of Hartley ***or*** Eller. (Ex. 1003, ¶¶104-105.)

Schaffer's seal module (i.e., tubular member) "includes a flexible, elongate tubular structure 101 having an outer wall 27 which includes a material 166 that is highly elastic, deformable, compliant …." (Ex. 1005, [0054].) Thus, Schaffer's tubular member is pliable. (Ex. 1003, ¶105.)

C. Claim 3

Claim 3 recites the "valve of claim 1 wherein the first portion of the filament extends in a loop completely around the tubular member." Schaffer anticipates claim 3 or renders claim 3 obvious alone in view of Hartley ***or*** Eller. (Ex. 1003, ¶¶106-114.)

1. Schaffer

Schaffer's actuating members are "at least partially circumferencially [sic] disposed about the portion 108 of the seal module 100." (Ex. 1005, [0076].) Figure 31 of Schaffer shows the actuating members collectively extend in a loop completely around the seal module 100:

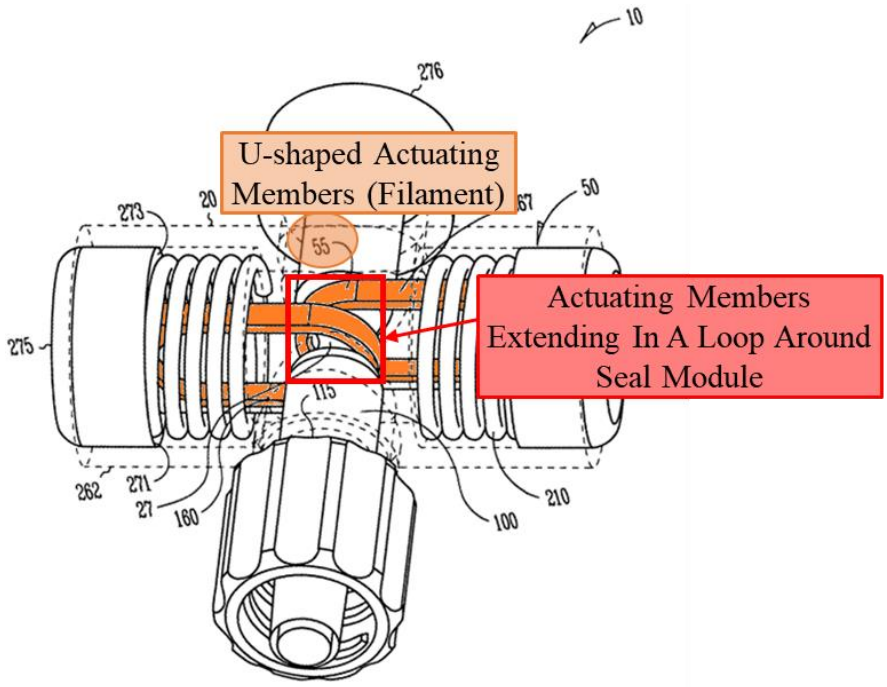

Fig. 31

(*Id.*, Fig. 31; Ex. 1003, ¶107.) The below illustration further shows the loop of the U-shaped member around the lumen:

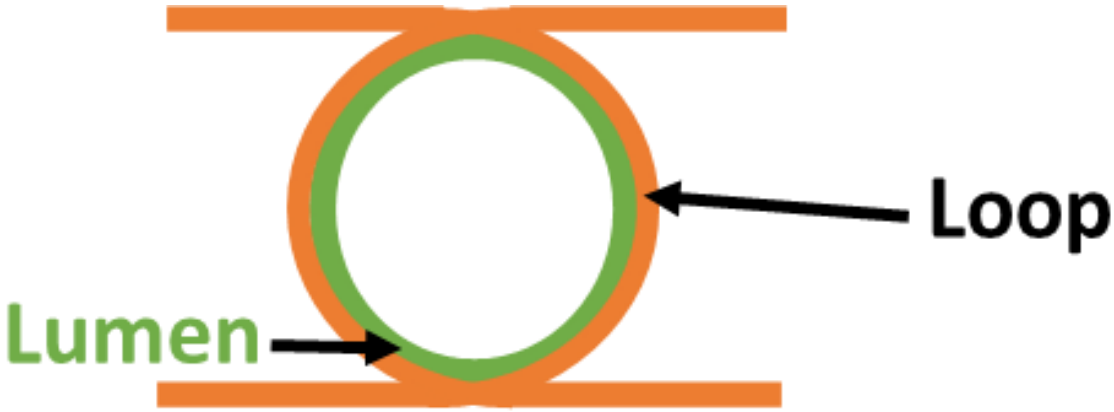

(Ex. 1003, ¶107.)

2. **Hartley**

As illustrated in Figure 3, Hartley's string "is wound preferably twice around the cylindrical diaphragm":

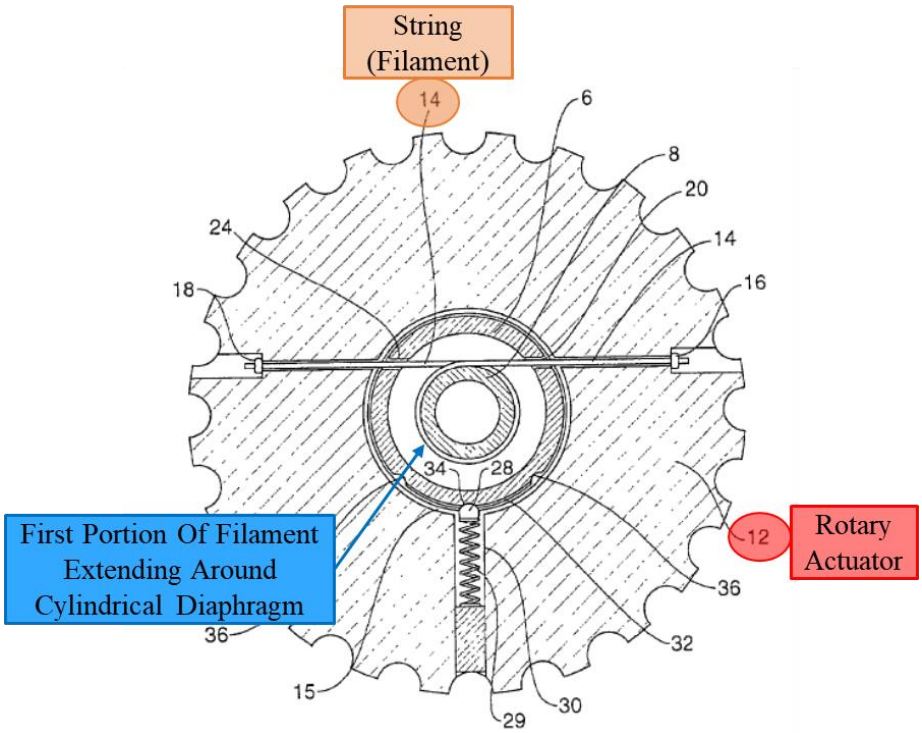

Fig 3

(Ex. 1006, [0031], Fig. 3.) Hartley's string therefore includes a first portion that "extends in a loop completely around the tubular member." (*Id.*; Ex. 1003, ¶109.) When replacing Schaffer's U-shaped actuating members with Hartley's string, POSITAs would have been motivated to wind Hartley's string around Schaffer's seal module twice (as in Hartley). (Ex. 1003, ¶110.) Hartley discloses that this is the preferred configuration and teaches that such a configuration "will close over a range of diameters of devices passed through the valve or can close completely down

to be self sealing." (Ex. 1006, [0031], [0037]; Ex. 1003, ¶110.) POSITAs would have reasonably expected success in using this configuration because Hartley discloses that a looped configuration forms an effective seal. (Ex. 1003, ¶111.)

3. Eller

Eller discloses embodiments that "can include a single wire member that is disposed around more than 75% of the outer surface of the sleeve or that is disposed around more than 100% of the outer surface of the sleeve. For example, the wire member can be positioned such that it extends at least one full revolution around the outer surface of the sleeve." (Ex. 1007, 22:18-24.) In such a configuration, Eller's wire member would include a first portion that "extends in a loop completely around the tubular member." (*Id.*; Ex. 1003, ¶112.) When replacing Schaffer's U-shaped actuating members with Eller's wire member, POSITAs would have been motivated to wrap Eller's wire at least one full revolution around Schaffer's seal module to ensure the wire formed a constrictive seal against any devices inserted through the valve. (Ex. 1003, ¶113.) POSITAs would have reasonably expected success because Eller encourages wrapping the wire one revolution around the internal sleeve and discloses that such a configuration forms a seal. (*Id.*, ¶114.)

D. Claim 4

Claim 4 recites the "valve of claim 1 wherein the first member of the actuator comprises a first button and the second member of the actuator comprises a second

button, wherein the first button and the second button are undepressed in the first position, and wherein the first button and the second button are depressed in the second position." Schaffer anticipates claim 4 or renders claim 4 obvious alone or in view of Hartley ***or*** Eller. (Ex. 1003, ¶¶115-116.)

As explained for claim 1 above, Schaffer's valve includes two spring-loaded actuator buttons 261 "movable from a first position to a second position on opposing sides of the housing":

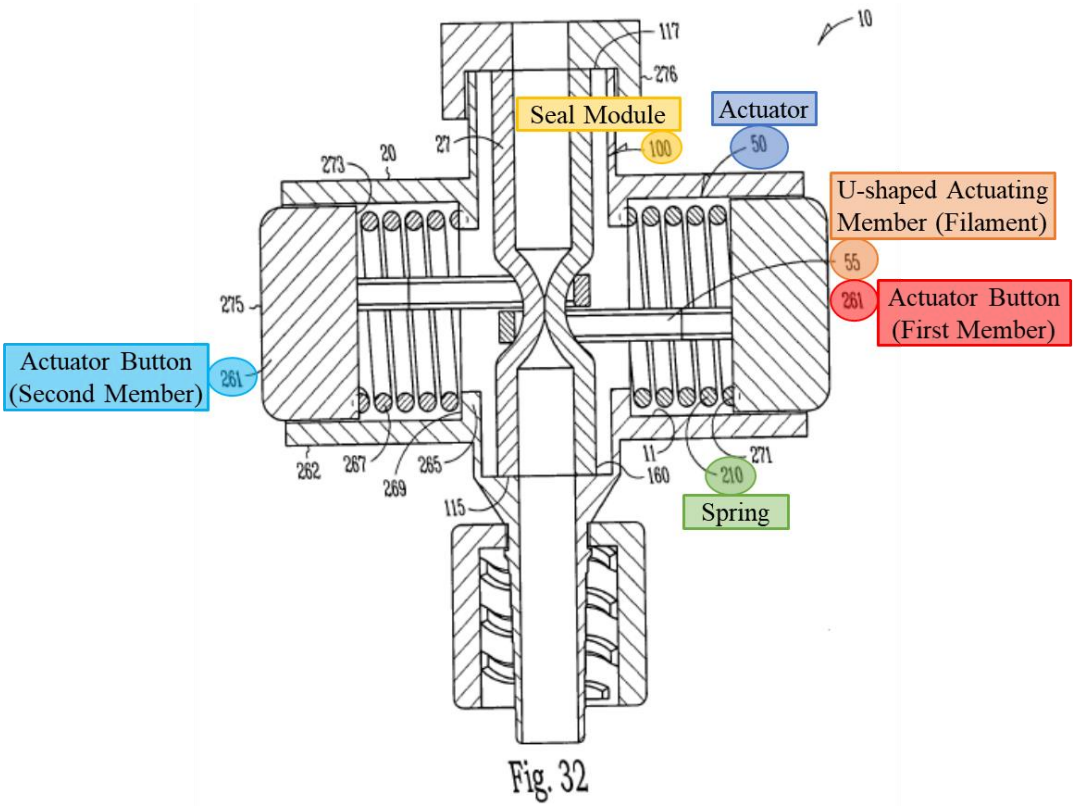

(Ex. 1005, [0075]-[0076], Figs. 31-32.) Schaffer's actuator buttons are undepressed when the valve is in the first (closed) position and depressed when the valve is in the second (open) position:

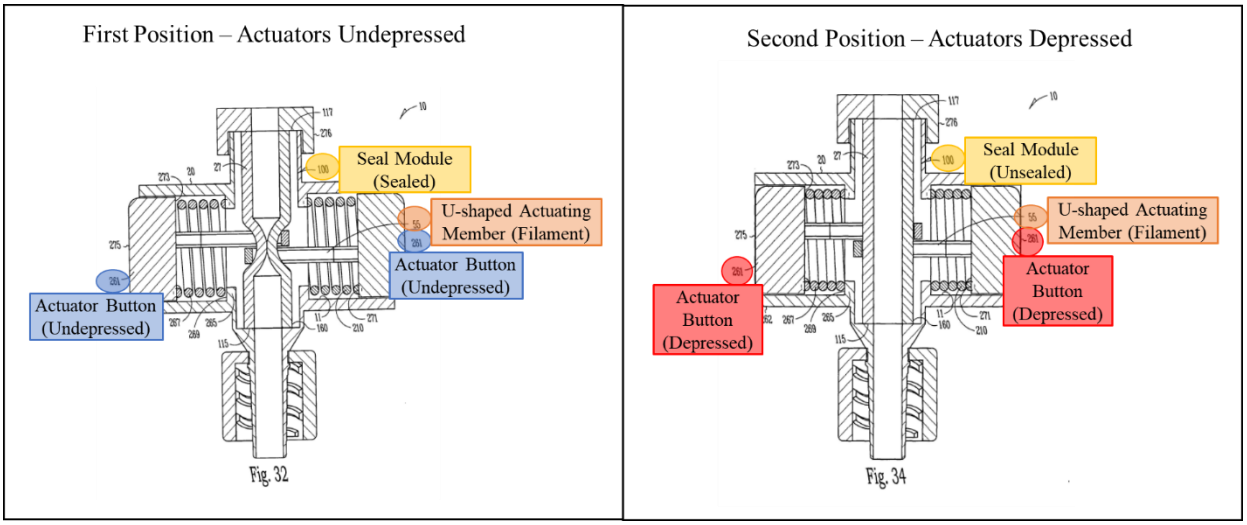

(*Id.*, [0077], Figs. 32, 34; Ex. 1003, ¶116.)

E. <u>Claim 5</u>

Claim 5 recites the "valve of claim 1 wherein, when the first member and the second member of the actuator are in the first position, the lumen of the tubular member is configured to remain constricted and sealed when a pressure differential exists between (a) a first volume outside the lumen and adjacent to a first end of the tubular member and (b) a second volume outside the central lumen and adjacent to a second end of the tubular member."[8] Schaffer anticipates claim 5 or renders claim 5 obvious alone or in view of Hartley ***or*** Eller. (Ex. 1003, ¶¶117-130.)

1. <u>Schaffer</u>

Schaffer discloses a "durable stasis valve that blocks the flow of gas or fluid completely and immediately with or without an instrument in place within the

[8] The term "central lumen" lacks antecedent basis.

gas/fluid path." (Ex. 1005, [0008].) As explained for claim 1, Schaffer's valve is sealed when the first and second members (i.e., buttons) are in the first position. (*Supra* §VI.A.4.)

Schaffer's valve is designed for use with a catheter that is inserted into the patient's vasculature. (*See* Ex. 1005, [0002] ("This application relates to catheters, in particular to a composite fluid-stasis valve for use with catheters."); Ex. 1009, Abstract, 1:1-9; Ex. 1003, ¶119.) When a catheter is inserted into the patient's vasculature, the pressure within the catheter matches the blood pressure. (Ex. 1003, ¶118.) Conversely, the pressure outside the patient is the air pressure, which is less than the blood pressure. (*Id.*) This pressure difference between the blood and air is one reason blood spurts out of wounds. (*Id.*)

Second End Subject to Air Pressure

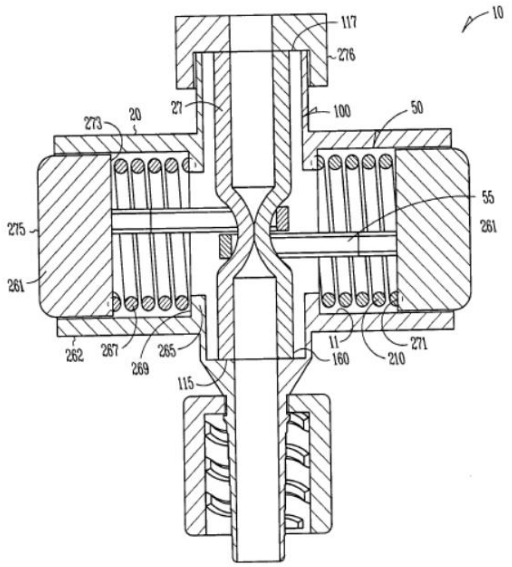

Fig. 32

First End Subject to Blood Pressure

(Ex. 1005, [0075], Fig. 32.)

All hemostasis valves, including Schaffer's valve pictured above, are designed to remain closed against the pressure differential between the blood pressure and the air pressure. (Ex. 1003, ¶118.) If Schaffer's valve did not remain closed, blood would leak out of the catheter into the operating room and the valve would not be a "hemostasis" valve (i.e., a valve that stops blood loss). (*Id.*) Schaffer's valve blocks "the flow of gas or fluid" during such medical procedures and, therefore, it remains closed when a pressure differential exists between the two ends of the valve. (Ex. 1005, Abstract, [0008], [0077]; Ex. 1003, ¶119.)

Accordingly, when Schaffer's actuator buttons are in the first, undepressed position, the central lumen of the tubular member remains constricted and sealed, even when a pressure differential existed between the first and second ends of the tubular member. (Ex. 1005, [0008], [0077]; Ex. 1003, ¶120.)

Moreover, to the extent Schaffer's valve did not maintain its seal when a pressure differential exists, a POSITA would have found it obvious to make one or more of several adjustments, including adjusting Schaffer's spring strength to apply additional force to seal the valve, adjusting the resilience and compressibility of the seal module that forms the valve's lumen, and/or adjusting the shape, flexibility, and/or dimensions of the U-shaped actuating members to more closely conform to the shape of the seal module and any tool(s) inserted through the valve. (Ex. 1003,

¶122.; *see also* Ex. 1007, 15:41-60 (recognizing POSITAs possessed the knowledge to adjust materials and configurations of actuating members for particular applications).) POSITAs would have been motivated to do so because the purpose of Schaffer's hemostasis valve is to prevent leakage when a catheter or medical device is inserted into a patient. (Ex. 1003, ¶122.)

POSITAs would have reasonably expected success in adjusting the spring strength to exert more tension on the filament by, for example, changing the spring material or adjusting the springs coils. (*Id.*) Springs are simple, predictable mechanical devices that would have been well understood by POSITAs. (*Id.*) As explained above, POSITAs would have reasonably expected success in selecting an appropriate lumen material in view of the range of suitable materials disclosed in the prior art. (*Supra* §VI.A.3.b.ii.) As also explained above, POSITAs would have reasonably expected success in adjusting Schaffer's U-shaped actuating members to increase their flexibility and improve the seal created around the cylindrically shaped seal module. (*Supra* §VI.A.b.i.)

2. <u>Schaffer and Hartley</u>

Hartley's valve is also intended to "permit[] [a] catheter or other instrument to be passed through the access valve and the valve to form a seal against the walls of the catheter or other instrument to prevent loss of blood or other fluid." (Ex. 1006, [0003].) Hartley further teaches that "[d]epending on how much the flexible

member [i.e., string] is pulled radially and/or tangentially the cylindrical diaphragm can be completely constricted to prevent fluid flow through the valve or can be constricted to the extent that it closes around an instrument, for instance a catheter, passed through the valve." (*Id.*, [0006].)

For the same reasons discussed in the Schaffer ground above, Hartley's string is designed to constrict and seal the lumen of a stasis valve where a pressure differential (e.g., blood pressure versus air pressure) exists across the valve. (*See id.*, [0003] ("The invention will be discussed in particular in relation to fluid flow prevention and access valves in medical applications for instance where it is desired to seal around a catheter or other instrument in a manner which permits the catheter or other instrument to be passed through the access valve and the valve to form a seal against the walls of the catheter or other instrument to prevent loss of blood or other fluid."); Ex. 1003, ¶123.) POSITAs would have reasonably expected that Hartley's string would maintain the lumen of Schaffer's tubular member in a constricted and sealed state when Schaffer's actuator buttons are in the first, undepressed position, even when a pressure differential exists between the proximal and distal ends of the lumen because that is the purpose of the string. (*Id.*, ¶124.)

Moreover, to the extent Schaffer's valve and Hartley's string did not maintain its seal when a pressure differential exists, a POSITA would have found it obvious to make one or more adjustments, including adjusting Schaffer's spring strength to

apply additional force to seal the valve, adjusting the resilience of Schaffer's lumen, and/or adjusting Hartley's string to improve the sealing of the valve for the reasons provided in the Schaffer ground. (*Supra* §VI.E.1; Ex. 1003, ¶125.)

3. Schaffer and Eller

Eller discloses that its fluid barrier valve device is designed to prevent the flow of fluid through the central sleeve when the actuator is in the closed position, causing the wire member to constrict the sleeve and create a seal. (Ex. 1007, Abstract, 12:14-17, 15:21-40, 17:47-18:8, Figs. 10A-10C.) Eller further describes quantitative analysis performed on embodiments having six differing sleeve materials "included in a selective fluid barrier valve device that was constructed to be similar to the embodiment illustrated in" Figures 1-10C. (*Id.*, 36:46-53.) The valve devices were "attached to a gravity flow rig and pressurized for 30 seconds per test at a pressure of 2.9 PSI +/- 0.1 PSI (e.g., systolic pressure)" and were measured for fluid leak "in the second configuration with no device disposed through the sleeve passageway and with the devices described in the table disposed through the sleeve passageway." (*Id.*, 36:53-60.) Eller discloses the results of the testing in the following table:

Material of Sleeve	Empty Sleeve Passageway	0.018"Wire disposed within sleeve passageway	0.035" Wire disposed within sleeve passageway	14 French dilator disposed within sleeve passageway	Rating:
80% - 4755 20% - 4765	3 g	5.4 g	50 g	4.9 g	+
100% - 4755	14.3 g	2.8 g	25.4 g	11 g	+
90% - 4755 10% - 4014	0	0	1.4 g	0	++
80% - 4755 20% - 4014	0	0	0	0	++++
70% - 4755 30% - 4014	0	0	0	0	++++
60% - 4755 40% - 4014	0	0	Trace	0	+++

(*Id.*, 36:26-44.)

Several of the valves tested in Eller demonstrated no leaks despite the pressure difference across the valve, including when no device was inserted through the valve. (*Id.*, 36:64-37:3.) Eller's test results confirm that Eller's wire member is suitable for constricting and sealing the lumen of a stasis valve, even when a pressure differential exists between the proximal and distal ends of the lumen. (Ex. 1003, ¶128.)

Given these disclosures and Schaffer's disclosures discussed above, POSITAs would have reasonably expected that Eller's wire member would maintain the lumen of Schaffer's tubular member in a constricted and sealed state when Schaffer's actuator buttons are in the first, undepressed position, even when a pressure differential exists between the proximal and distal ends of the lumen. (*Id.*, ¶129.)

Moreover, to the extent Schaffer's valve and Eller's wire member did not maintain its seal when a pressure differential exists, a POSITA would have found it obvious to make or more adjustments, including adjusting Schaffer's spring strength to apply additional force to seal the valve, adjusting the resilience of Schaffer's lumen, and/or adjusting Eller's wire member to improve the sealing of the valve for the reasons provide in the Schaffer ground. (*Supra* §VI.E.1; Ex. 1003, ¶130.)

F. <u>Claim 6</u>

Claim 6 recites the "valve of claim 1 wherein, when the first member and the second member of the actuator are in the first position, the lumen of the tubular member is configured to remain constricted and sealed when vacuum pressure is applied to a volume outside the lumen and adjacent to either a first end or a second end of the tubular member." Schaffer anticipates claim 6 or renders claim 6 obvious alone or in view of Hartley ***or*** Eller. (Ex. 1003, ¶¶131-136.)

As discussed in claim 5, Schaffer, Hartley, and Eller disclose stasis valves that create a seal to prevent the leakage of blood or fluid during intravascular medical procedures. (*Supra* §VI.E.) Schaffer further discloses that its valve prevents leakage across "a range of instruments," such as "a catheter, guidewire, needle, or fiber." (Ex. 1005, [0056].) A common type of catheter used with hemostasis valves in September 2017 were aspiration catheters, which apply vacuum pressure through a catheter inserted into a patient's vasculature. (Ex. 1003, ¶132; *see e.g.*, Ex. 1007,

27:44-50 (noting that Eller's valve may be used with "suction devices").) For example, Garrison discloses an arterial catheter system that can include an access sheath 220, a hemostasis valve 226, and a flow line 905 that may "be connected to an aspiration source such as a pump or syringe":

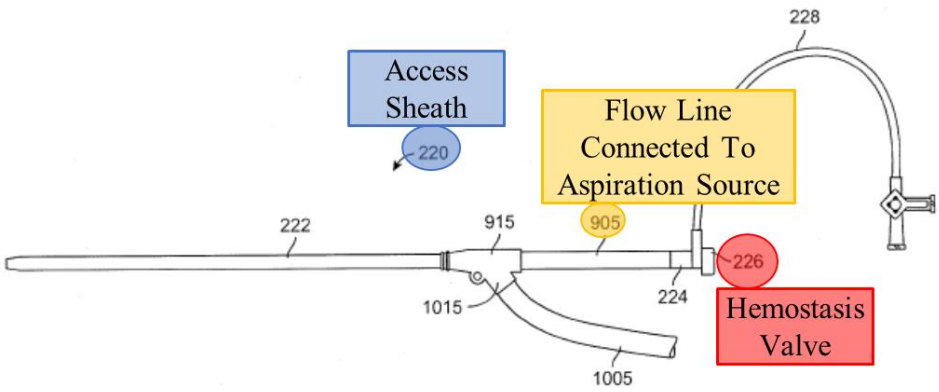

FIG. 11

(Ex. 1011, [0071]-[0072], Fig. 11.)

Given the common practice of using hemostasis valves with suction devices in September 2017 and Schaffer's disclosures discussed in claim 5, POSITAs would have understood that when Schaffer's actuator buttons remain in the first, undepressed position, the central lumen of the tubular member would remain constricted and sealed, even when a vacuum pressure is applied to a volume outside of the valve's lumen and adjacent to the end of the tubular member. (Ex. 1003, ¶133; Ex. 1005, [0008], [0077].) The lumen on Schaffer's valve is held in the closed position by the U-shaped actuating members and the springs attached to the buttons

pulling on the members. A POSITA would not have expected the vacuum pressure applied through a catheter inserted into a patient to be strong enough to overwhelm the spring force to open the valve. (Ex. 1003, ¶133.) Further, the force from the vacuum pressure would be perpendicular to the actuating members and, therefore, would not force the actuating members apart. (*Id.*)

Moreover, the only disclosure in the ’011 patent regarding the valve’s ability to seal in the presence of vacuum pressure is the statement that: “due to the narrowing shape of the elongate member 132 when the constricting mechanism 141 is in the first configuration, a vacuum applied to the portions of the delivery device 100 distal to the axis 152 draws the elongate member 132 towards the first configuration and can, in some embodiments, increase the strength, robustness, and/or strength of the seal of the valve 104.” (Ex. 1001, 10:53-59.) Schaffer’s elongate member (seal module 100) also has a “narrowing shape” when the actuator buttons are in the first, undepressed configuration:

’011 Patent	Schaffer
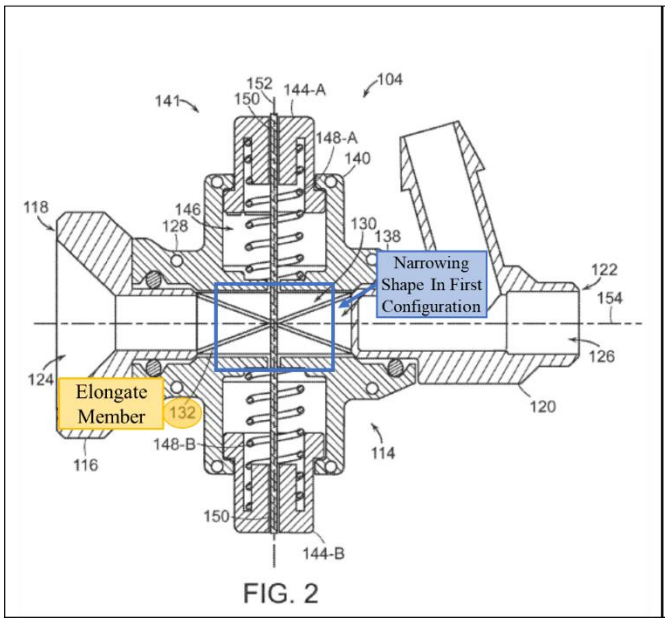	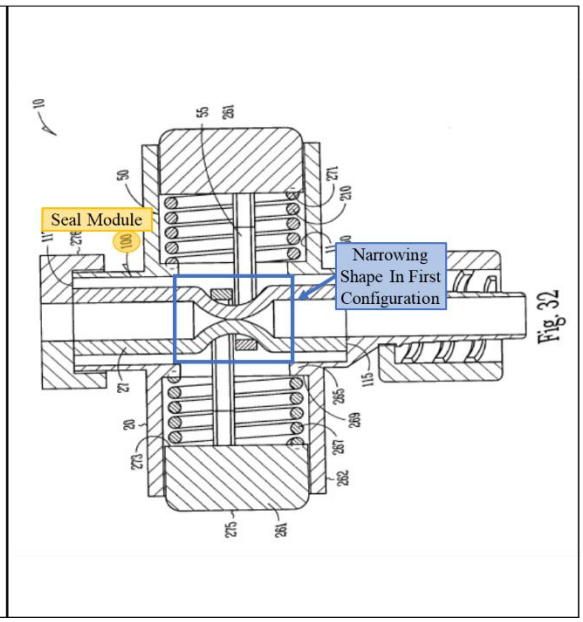

(*Id.*, Fig. 2 (left); Ex. 1005, [0077], Fig. 32 (right).) Because Schaffer discloses the same structure that the ’011 patent claims to enable sealing in the presence of vacuum pressure, PO cannot argue that Schaffer’s valve is not “configured to remain constricted and sealed when vacuum pressure is applied to a volume outside the lumen and adjacent to either a first end or a second end of the tubular member.”

In addition, given the disclosures of Schaffer, Hartley, and Eller discussed previously for claim 5, a POSITA would have reasonably expected that Hartley’s string or Eller’s wire member would maintain the lumen of Schaffer’s tubular member in a constricted and sealed state when Schaffer’s actuator buttons are in the first, undepressed position, even when a vacuum pressure is applied to a volume outside of the valve’s lumen. (Ex. 1003, ¶135; Ex. 1005, [0008], [0077]; Ex. 1006, [0003], [0006]; Ex. 1007, 27:44-50, 36:46-37:3.) Like Schaffer, Hartley’s string and

Eller's wire member are pulled perpendicular to the direction of suction. (Ex. 1003, ¶135.) A POSITA would not have expected the vacuum pressure to exert a force on the string/wire member and springs that would open the valve. (*Id.*)

Moreover, to the extent Schaffer's valve did not maintain its seal under vacuum pressure (either alone or with Hartley's or Eller's filament), a POSITA would have found it obvious to make one or mor adjustments, including adjusting Schaffer's spring strength to apply additional force to seal the valve, adjusting the resilience and compressibility of the seal module that forms the valve's lumen, and/or adjusting the shape, flexibility, and/or dimensions of the U-shaped actuating members to more closely conform to the shape of the seal module and any tool(s) inserted through the valve. (Ex. 1003, ¶136.) POSITAs would have been motivated to do so because the purpose of Schaffer's hemostasis valve is to prevent leakage when a catheter or medical device is inserted into a patient, including aspiration catheters. (*Id.*) POSITAs would have reasonably expected success in making these adjustments for the reasons explained above for claim 5. (*Supra* §VI.E.)

G. <u>Claim 7</u>

Claim 7 recites the "valve of claim 1 wherein the lumen of the tubular member extends a long [sic] a first longitudinal axis, wherein the first member and the second member of the actuator are movable between the first and second positions along a second longitudinal axis, and wherein the first longitudinal axis is orthogonal to the

second longitudinal axis." Schaffer anticipates claim 7 or renders claim 7 obvious alone or in view of Hartley ***or*** Eller. (Ex. 1003, ¶¶137-138.)

Schaffer's actuator buttons (i.e., first and second members) are movable between a first and second position along a longitudinal axis that is orthogonal to the longitudinal axis of the tubular member:

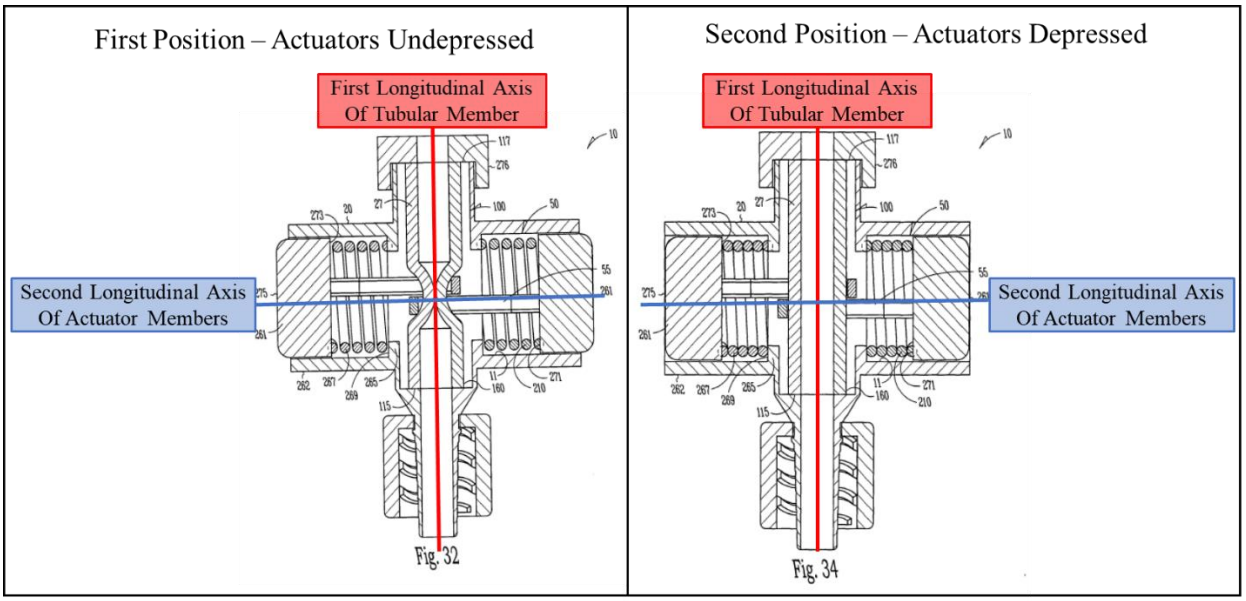

(Ex. 1005, [0077], Figs. 31-34.)

H. <u>Claim 8</u>

Claim 8 recites the "valve of claim 1 wherein the biasing system comprises a first compression spring coupled to the first member and a second compression spring coupled to the second member." Schaffer anticipates claim 8 or renders claim 8 obvious alone or in view of Hartley ***or*** Eller. (Ex. 1003, ¶¶139-140.)

Schaffer's biasing system comprises two compression springs (resilient members), and "the distal end 271 of the resilient members 267 each abut the proximal end 273 of an actuator button 261":

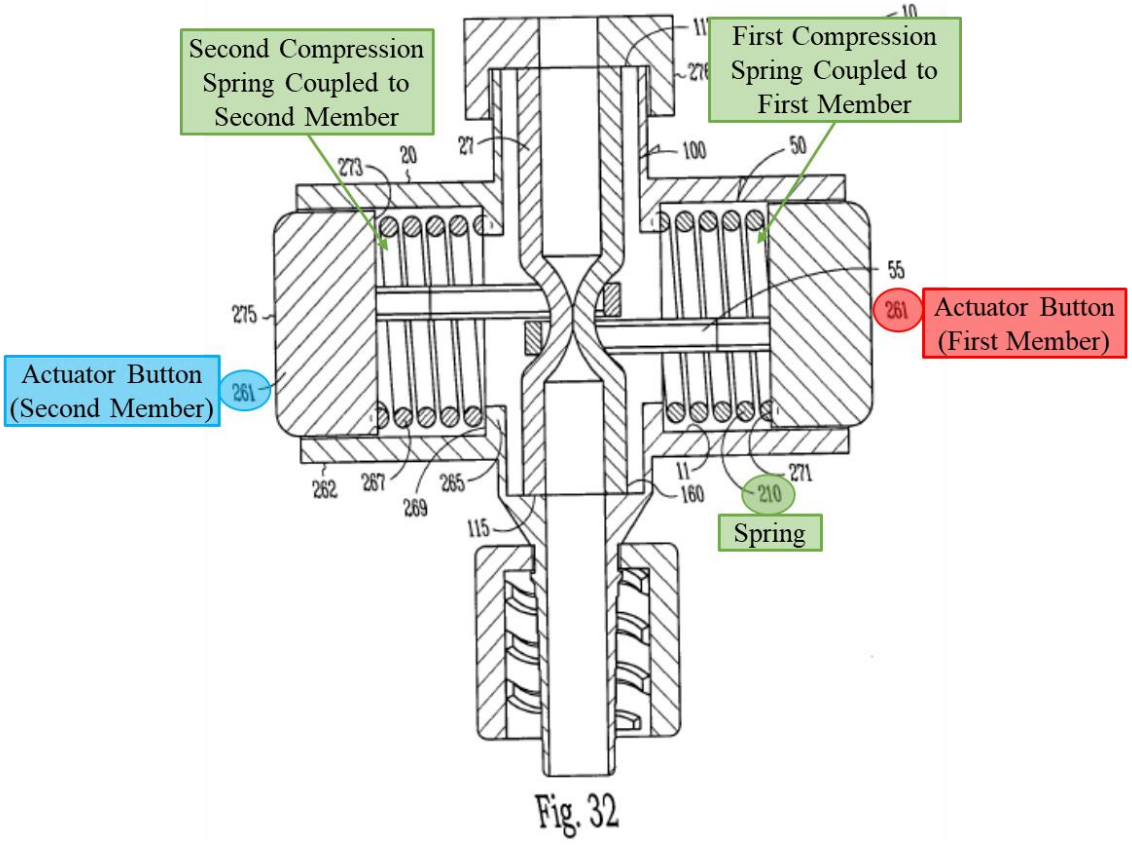

(Ex. 1005, [0076], Figs. 31-34; Ex. 1003, ¶140.)

I. <u>Claim 9</u>

Claim 9 recites the "valve of claim 1 wherein, in the first position, the first member and the second member of the actuator pull the filament to circumferentially constrict the tubular member such that the lumen is constricted and sealed." Schaffer anticipates claim 9 or renders claim 9 obvious alone or in view of Hartley ***or*** Eller. (Ex. 1003, ¶¶141-142.)

As explained for claim 1, when Schaffer's actuator buttons are in the first, undepressed, position, the springs coupled to Schaffer's actuator buttons pull the U-shaped actuating members to constrict the seal module 100. (Ex. 1005, [0076]-[0077]; Ex. 1003, ¶142.) If Schaffer's U-shaped actuating members were replaced with Hartley's string or Eller's wire member, Schaffer's actuator buttons would similarly pull the string/wire member, rather than the U-shaped actuating members, to circumferentially constrict the seal module 100. (Ex. 1003, ¶142.)

VII. GROUND 5: CLAIMS 1-3, 5-6, 9 OBVIOUS OVER HARTLEY IN COMBINATION WITH ELLER

During prosecution of the '011 patent, the examiner found that Hartley discloses every limitation of independent claim 1 except the "biasing system." (Ex. 1002, 60; Ex. 1003, ¶144.) The examiner overlooked, however, that such biasing systems were well known in the prior art and would have been obvious to combine with Hartley in September 2017. (Ex. 1003, ¶144.)

For example, Eller discloses a biasing system for a hemostasis valve in the form of a torsion spring placed between the valve's housing and actuator such that "when no outside forces are applied to the … valve device, the spring positions the actuator" in the closed position. (Ex. 1007, 19:22-30.) As explained below, a POSITA would have recognized that Eller's torsion spring would be well-suited for use with Hartley's rotational actuator, and a POSITA would have found it obvious

to combine Eller's biasing system with Hartley's valve. (Ex. 1003, ¶145.) Therefore, Hartley combined with Eller renders obvious claims 1-3, 5-6, and 9. (*Id*.)

A. Claim 1

Hartley combined with Eller renders claim 1 obvious. (Ex. 1003, ¶¶146-166.)

1. Preamble

If the preamble is limiting, Hartley and Eller disclose a "valve" for the reasons explained in Grounds 1-4. (*Supra* §VI.A.1.)

2. Tubular Member

Hartley discloses the "tubular member" recited in claim 1. (Ex. 1003, ¶¶148-149.) The examiner correctly found that Hartley discloses this limitation during prosecution of the '011 patent. (Ex. 1002, 60.)

Hartley discloses an "access valve which can be controlled to vary the size of the aperture through the valve and be flexible so that a seal may be formed against an instrument or other object inserted through the access valve." (Ex. 1006, [0004].) Hartley's valve includes a "cylindrical housing 6 into which is received a cylindrical elastomeric diaphragm 8 … [that] defines a cylindrical aperture 3 therethrough":

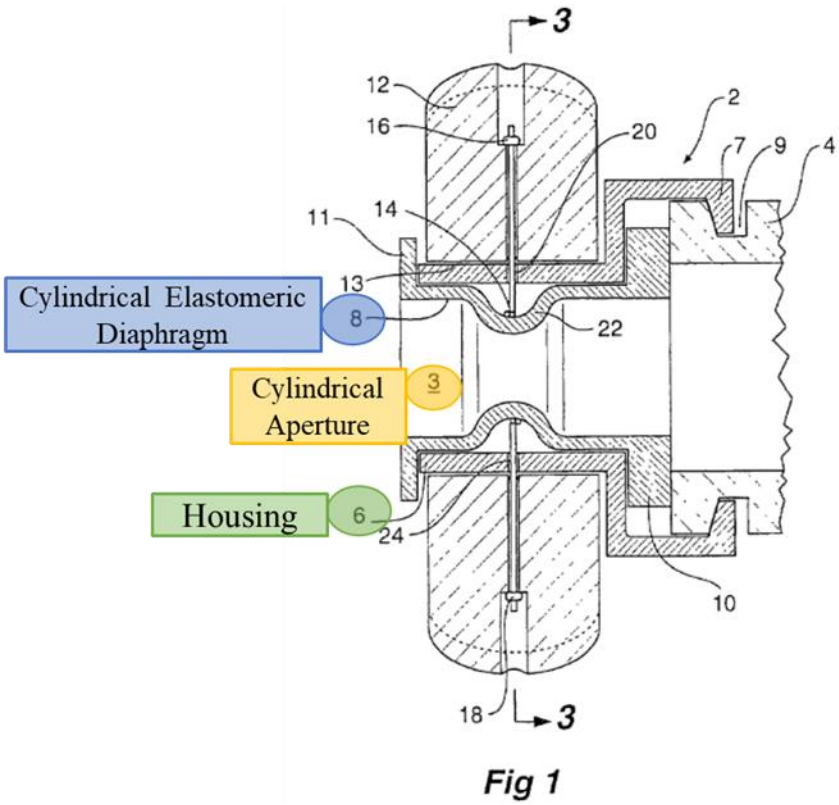

(*Id.*, [0031], Fig. 1.) Hartley's "cylindrical diaphragm can be completely constricted to prevent fluid flow through the valve or can be constricted to the extent that it closes around an instrument, for instance a catheter, passed through the valve." (*Id.*, [0006].) Accordingly, Hartley's elastomeric diaphragm is "a tubular member defining a lumen configured to slidably receive a catheter." (Ex. 1003, ¶149.)

3. <u>Constricting Mechanism</u>

Hartley discloses the "constricting mechanism" recited in claim 1. (Ex. 1003, ¶¶150-158.) The examiner correctly found that Hartley discloses this limitation during prosecution of the '011 patent. (Ex. 1002, 60.)

a. <u>Actuator</u>

Hartley's valve includes a cylindrical housing that holds a "cylindrical elastomeric diaphragm" and a rotatory actuator mounted onto the housing:

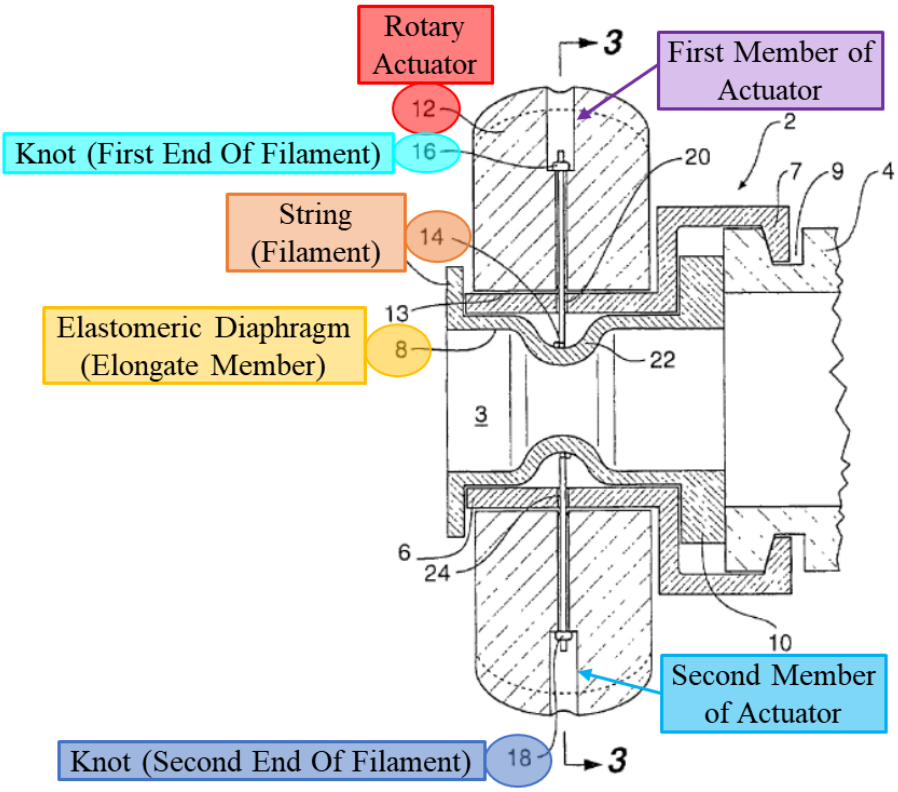

Fig 1

(Ex. 1006, [0031], Fig. 1.)

The portions of the rotary actuator secured to the first and second ends of the string 14 are the first and second members of the actuator as claimed in the '011 patent. (Ex. 1003, ¶152.) As discussed below, Hartley's first and second members are coupled to the first and second ends of the string 14 (i.e., filament). (*Infra* §VII.A.3.b.) The first and second members are also "moveable between (a) a first position wherein the filament circumferentially constricts the lumen to create a seal

and (b) a second position wherein the filament is moved to at least partially open the lumen." (Ex. 1003, ¶154.) For example, Hartley discloses that "[r]otation of the rotary actuator 12 with respect to the cylindrical housing 6 will cause the string 14 to be pulled in both directions at once and hence the cylindrical diaphragm 8 to be constricted." (Ex. 1006, [0031], [0034], Fig. 4.) Hartley further discloses that "[r]otation of the rotary actuator back to the central position where the detent ball 28 is received in depression 34 will cause the sutures to loosen again so that the resilient cylindrical diaphragm will retain its original shape as shown in FIGS. 1 and 3." (*Id.*, [0034].) Thus, Hartley discloses the actuator required by claim 1. (Ex. 1003, ¶¶151-154.)

b. <u>Filament</u>

Hartley's valve includes a "string 14 … mounted into the rotary actuator." (*Id.*) Hartley's string 14 is a filament. (Ex. 1003, ¶155; *supra* §VI.A.3.b.ii.)

As illustrated in Figure 3, Hartley's string is secured to the rotary actuator at a first end via a knot 16 and "then passes through an aperture 20 in the cylindrical housing 6 and then is wound preferably twice around the cylindrical diaphragm 8 … and then passes through a further aperture 24 in the cylindrical housing before being fixed by knot 18 again in the rotary actuator":

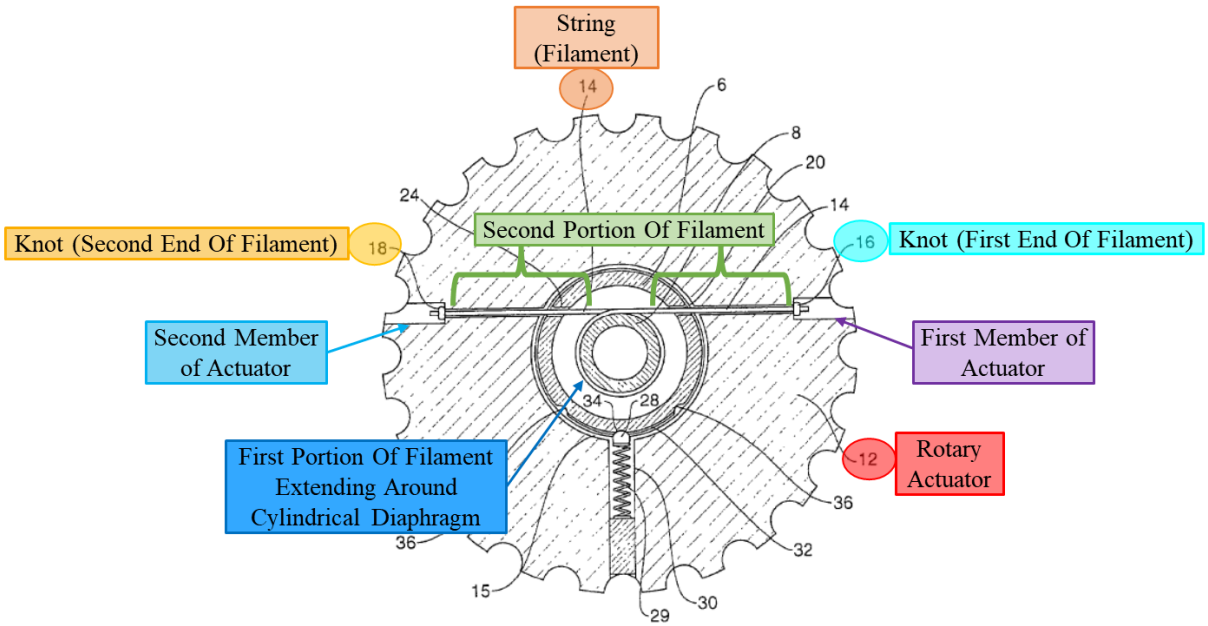

Fig 3

(Ex. 1006, [0031], Fig. 3.) Hartley's string therefore includes "a first portion extending around at least a portion of the tubular member" and "a second portion having a first end extending from the first portion in one direction and a second end extending from the first portion in another direction." (*Id.*; Ex. 1003, ¶¶156-157.) Thus, Hartley discloses the filament required by claim 1. (Ex. 1003, ¶¶155-158.)

4. <u>Biasing System</u>

Hartley in combination with Eller renders obvious the "biasing system" recited in claim 1. (Ex. 1003, ¶¶159-166.)

Eller discloses selective fluid barrier valve devices that include "a housing 16, an actuator 18, a sleeve 20, [and] a first wire member 22":

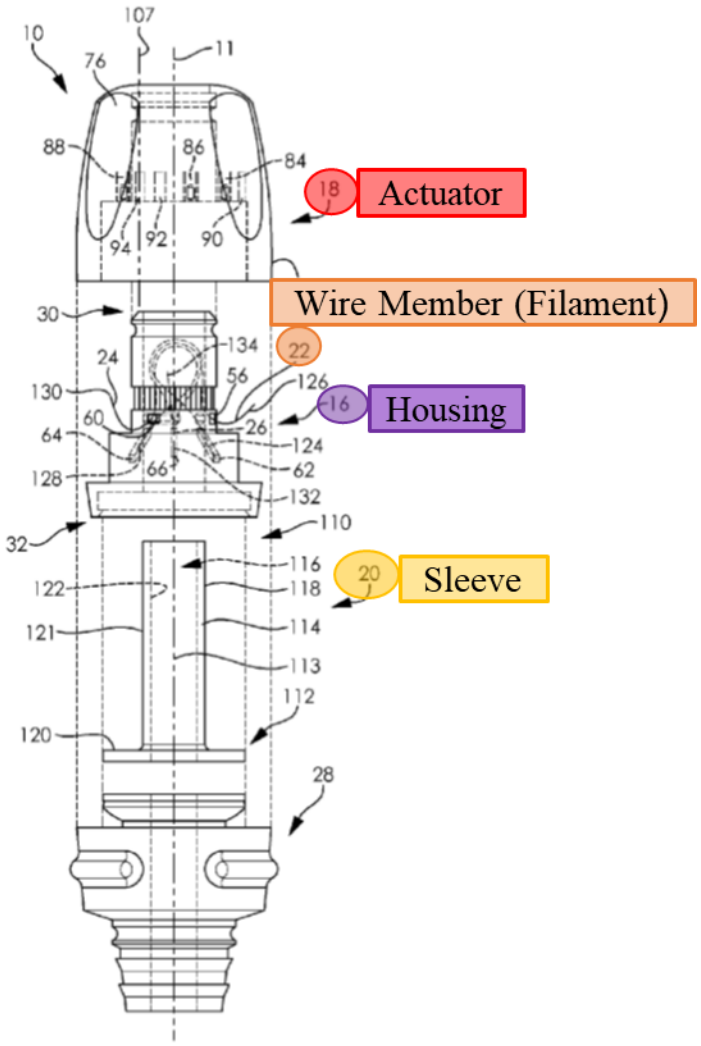
Actuator
Wire Member (Filament)
Housing
Sleeve
10
107
11
76
88
86
84
18
94
92
90
30
134
22
24
56
126
130
16
60
26
64
124
66
62
128
132
110
32
116
20
122
118
121
114
113
112
120
28

FIG. 2

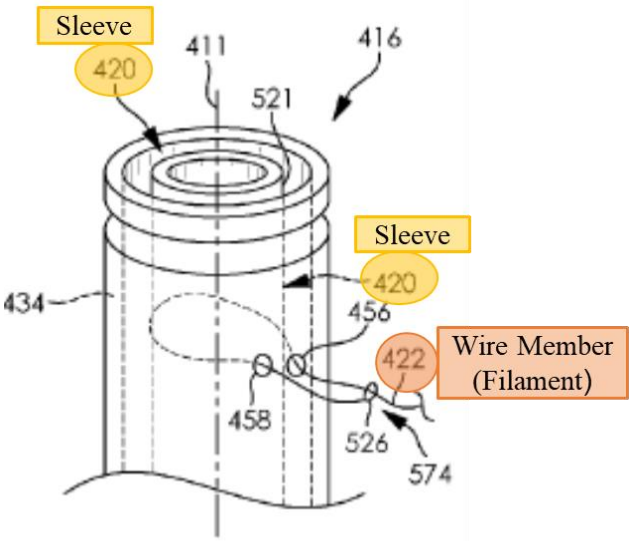

FIG. 16

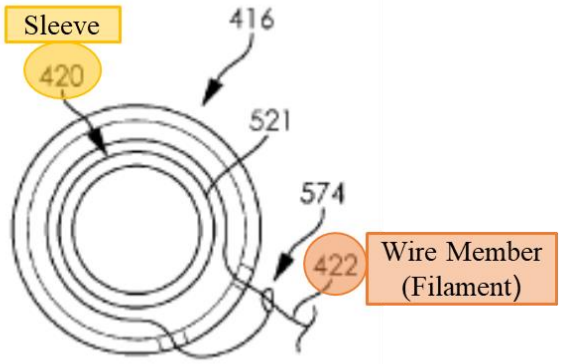

FIG. 17

(Ex. 1007, 5:1-5, Figs. 2, 16-17.) Eller's fluid barrier valve has two configurations. "In the first configuration, the passageway 116 defined by the sleeve 20 is open such that fluid can pass through the passageway. In the second configuration, the passageway 116 defined by the sleeve 20 is closed such that fluid is prevented from passing through the passageway 116." (*Id.*, 12:13-18.) Eller further discloses:

> Optionally, a selective fluid barrier valve device can be **biased to the second configuration** such that the **actuator is biased to the second position**. This can be accomplished using any suitable structural configuration or component. For example, a **torsion spring** can be positioned between the housing and the actuator and can be attached to the housing and the actuator such that **when no outside forces are applied to the selective fluid barrier valve device, the spring positions the actuator in the second position**.

(*Id.*, 19:22-30 (emphasis added).) Eller therefore discloses a biasing system configured to bias an actuator to a position wherein the lumen of a stasis valve is sealed. (Ex. 1003, ¶160.)

POSITAs would have been motivated to combine Eller's biasing system with Hartley's fluid control valve for several reasons. (*Id.*, ¶161.) First, the biasing system would ensure that Hartley's valve is quickly sealed when a catheter or other device is removed through the valve, which would minimize blood loss during a medical procedure. (*Id.*) Further, the biasing system would ensure that the physician could not inadvertently leave the valve open after removing a device, which could lead to harmful blood loss. (*Id.*)

Second, the biasing system simplifies Hartley's valve and the steps required to seal the valve to prevent blood loss. (*Id.*, ¶162.) For example, the biasing system eliminates the need for the operator to manually seal the valve prior to or during the procedure. (*Id.*) Eliminating this step would not only make the procedure for the physician, but it would also save time during the procedure. (*Id.*)

Third, adding the biasing system to Hartley's valve would merely entail the combination of known elements (Hartley's valve and Eller's torsion spring) according to known methods (positioning a torsion spring between the valve housing and actuator) to yield the predictable result of reducing leakage of fluid through the valve. *See KSR*, 550 U.S. at 416; (Ex. 1003, ¶163.)

POSITAs would have had a reasonable expectation of success in combining Eller's torsion spring with Hartley's valve because Hartley and Eller are from the same field of endeavor and share the same objective of providing a fluid control

valve suitable to seal around a range of tools inserted through the valve during intravascular medical procedures. (Ex. 1006, [0004]; Ex. 1007, Abstract, 12:15-18, 15:21-40, 17:47-18:8; Ex. 1003, ¶164.) Additionally, the valves in Hartley and Eller share many common features, including: a housing, a rotational actuator mounted to the housing, a tubular sleeve/diaphragm extending through the actuator, and a constricting string/wire extending circumferentially around the sleeve/diaphragm. (*See, e.g.*, Ex. 1006, [0031], Figs. 1-3; Ex. 1007, 5:1-12, Figs. 1-10; Ex. 1003, ¶165.) Eller also explains that the torsion spring of the biasing system "can be positioned between the housing and the actuator and can be attached to the housing and the actuator such that when no outside forces are applied to the selective fluid barrier valve device, the spring positions the actuator in the second position." (Ex. 1007, 19:26-30.) The positioning of a torsion spring between two components that rotate with respect to each other was conventional in September 2017 and would have been well within the skill and understanding of a POSITA. (Ex. 1003, ¶166.) Consequently, POSITAs would have reasonably expected that a similar arrangement could be successfully used to attach a torsion spring to Hartley's housing and rotary actuator to bias the actuator toward the closed position. (*Id*.)

B. <u>Claim 2</u>

Hartley combined with Eller renders claim 2 obvious. (Ex. 1003, ¶¶167-168.) Hartley's cylindrical diaphragm (i.e., tubular member) "may be constructed from a

[sic] elastomeric material such as silicone rubber" and can be constricted by the string. (Ex. 1006, [0016].) Thus, the cylindrical diaphragm is pliable. (Ex. 1003, ¶168.)

C. <u>Claim 3</u>

Hartley combined with Eller renders claim 3 obvious. (Ex. 1003, ¶¶169-170.) As illustrated in Figure 3, Hartley discloses that its string "is wound preferably twice around the cylindrical diaphragm":

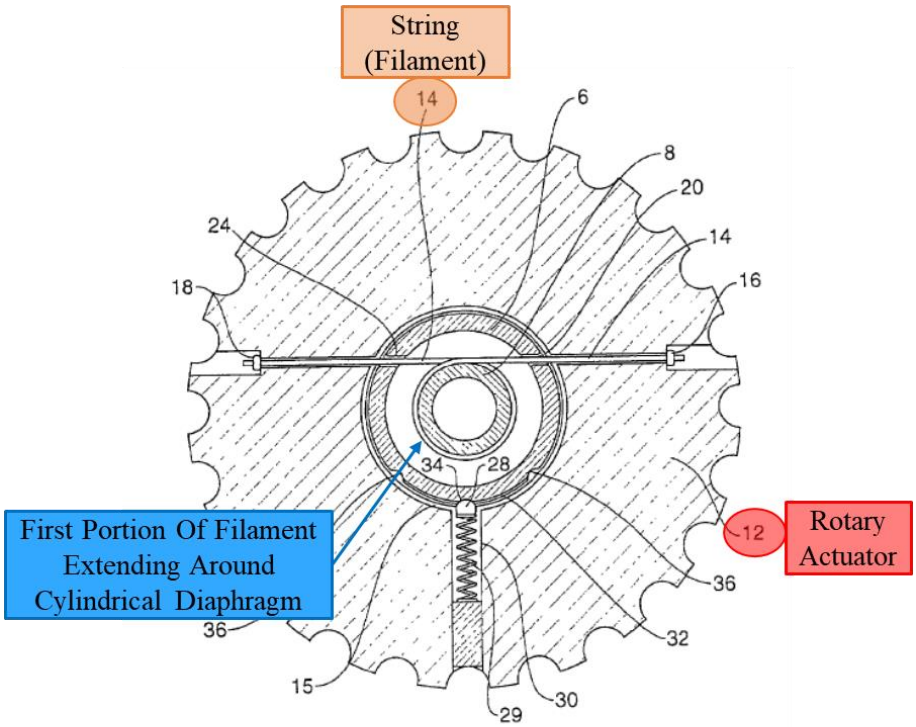

Fig 3

(Ex. 1006, [0031], Fig. 3.) Hartley's string therefore includes a first portion that "extends in a loop completely around the tubular member." (*Id.*; Ex. 1003, ¶170.)

D. <u>Claim 5</u>

Hartley combined with Eller renders claim 5 obvious. (Ex. 1003, ¶¶171-174.) Hartley's valve "can be controlled to vary the size of the aperture through the valve and be flexible so that a seal may be formed against an instrument or other object inserted through the access valve." (Ex. 1006, [0004].) Hartley further teaches that "[d]epending on how much the flexible member is pulled radially and/or tangentially the cylindrical diaphragm can be completely constricted to prevent fluid flow through the valve or can be constricted to the extent that it closes around an instrument, for instance a catheter, passed through the valve." (*Id.*, [0006].)

As explained in Grounds 1-4, a pressure differential exists between the proximal and distal ends of a catheter inserted into a patient's vasculature. (*Supra* §VI.E.) The purpose of Hartley's valve is to maintain a seal when devices are inserted through the valve into the patient's vasculature. (Ex. 1003, ¶173.) Thus, POSITAs would have reasonably expected that Hartley's valve would maintain the lumen of the cylindrical diaphragm in a constricted, sealed state when the actuator is in the first, closed position, even when a pressure differential exists between the proximal and distal ends of the lumen. (*Id.*, ¶174.)

E. <u>Claim 6</u>

Hartley combined with Eller renders claim 6 obvious. (Ex. 1003, ¶¶175-179.) As explained in Grounds 1-4, POSITAs commonly used hemostasis valves with

suction devices, such as aspiration catheters, in September 2017 to create a seal during intravascular procedures. (*Supra*, §VI.F.) Given this common practice and Hartley's disclosures discussed previously for claim 5, POSITAs would have understood that Hartley's valve would maintain the lumen of the cylindrical diaphragm in a constricted, sealed state when the actuator is in the first, closed position, even when a vacuum pressure is applied to a volume outside of the valve's lumen. (Ex. 1003, ¶177; Ex. 1006, [0003], [0006].)

Moreover, the only disclosure in the '011 patent regarding the valve's ability to seal in the presence of vacuum pressure is the statement that: "due to the narrowing shape of the elongate member 132 when the constricting mechanism 141 is in the first configuration, a vacuum applied to the portions of the delivery device 100 distal to the axis 152 draws the elongate member 132 towards the first configuration and can, in some embodiments, increase the strength, robustness, and/or strength of the seal of the valve 104." (Ex. 1001, 10:53-59.) Hartley also discloses that its elongate member (cylindrical diaphragm 8) has a "narrowing shape" when the actuator is in in the first (i.e., closed) configuration:

’011 Patent	Hartley
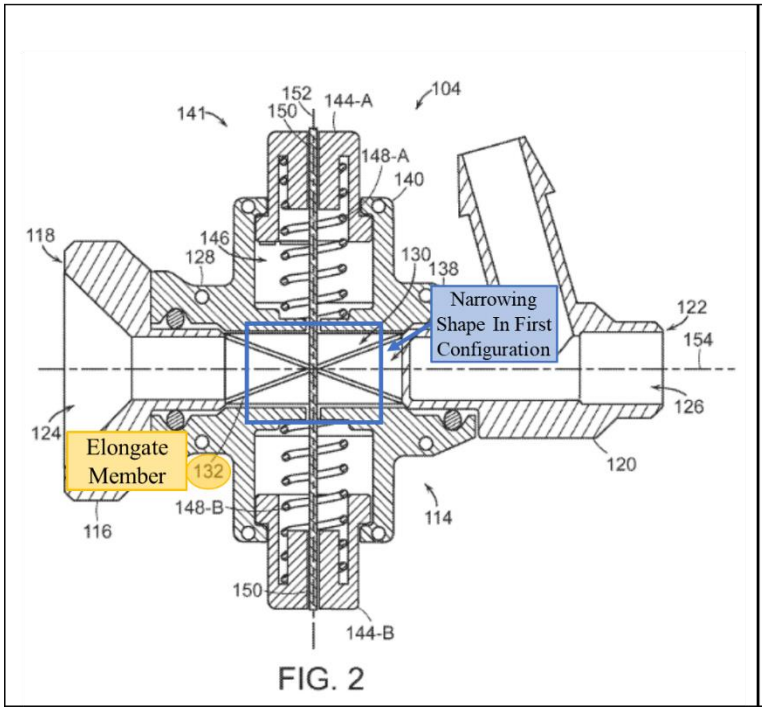	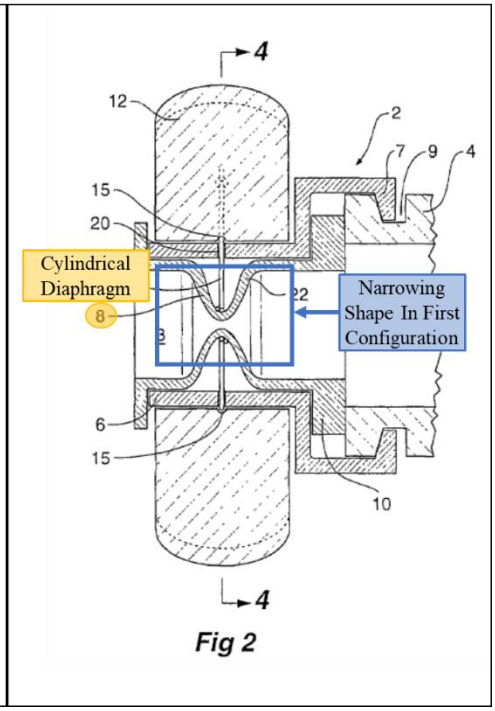

(*Id.*, Fig. 2 (left); Ex. 1006, [0031], Fig. 2[9] (right).) Accordingly, because Hartley discloses the same structure disclosed in the ’011 patent for sealing the valve in the presence of vacuum pressure, PO cannot argue that Hartley’s valve is not “configured to remain constricted and sealed when vacuum pressure is applied to a volume outside the lumen and adjacent to either a first end or a second end of the tubular member.”

Moreover, to the extent Hartley’s valve did not maintain its seal under vacuum pressure, a POSITA would have found it obvious to adjust the torsion spring strength

[9] Figure 2 of Hartley depicts the valve in a “partially constricted position.” (Ex. 1006, [0026].) The cylindrical diaphragm would have an even more narrow shape in the fully constricted position. (Ex. 1003, ¶178.)

to apply additional force to seal the valve, adjust the resilience and compressibility of the cylindrical diaphragm that forms the valve's lumen, and/or adjust the shape, flexibility, and/or dimensions of the string to more closely conform to the shape of the seal module and any tool(s) inserted through the valve. (Ex. 1003, ¶179.) POSITAs would have been motivated to do so because the purpose of Hartley's hemostasis valve is to prevent leakage when other devices, such as aspiration catheters, are inserted through the valve. (*Id.*) POSITAs would have had a reasonable expectation of success in making such adjustments for the same reasons discussed previously in Grounds 1-4. (*Supra* §VI.F.)

F. Claim 9

Hartley combined with Eller renders claim 9 obvious. (Ex. 1003, ¶¶180-181.) Hartley discloses that "[r]otation of the rotary actuator 12 with respect to the cylindrical housing 6 will cause the string 14 to be pulled in both directions at once and hence the cylindrical diaphragm 8 to be constricted." (Ex. 1006, [0031].) Hartley therefore discloses the additional limitations of claim 9. (Ex. 1003, ¶181.)

VIII. SECONDARY CONSIDERATIONS

Petitioner is not aware of any evidence of secondary considerations. (Ex. 1003, ¶¶182-183.) If Patent Owner identifies evidence of secondary considerations, Petitioner respectfully requests an opportunity to respond.

IX. THE BOARD SHOULD NOT DENY INSTITUTION UNDER §325(d)

Schaffer, which forms the basis for Grounds 1 and 2 herein, was not cited during prosecution of the ’011 patent. For this reason, the Board should not exercise its discretion to deny institution under 35 U.S.C. §325(d).

Hartley and Eller were cited on IDS’s during prosecution of the ’011 patent. (Ex. 1002, 111, 244.) In a notice of allowance issued on December 14, 2022, the examiner stated that Hartley disclosed every limitation of allowed claim 1 except a “biasing system configured to bias the first member and the second member to the first position.” (*Id*., 60.) As explained herein, a POSITA would have found it obvious to combine Hartley’s valve with the biasing system disclosed by Eller, rendering challenged claims 1-3, 5-6, and 9 unpatentable as obvious. (*Supra* §VII.) The examiner therefore materially erred in allowing the challenged claims over Hartley and Eller. The examiner did not address the combination of Hartley with Eller proposed herein. Accordingly, the Board should not deny institution based on the citation of Hartley and Eller in IDS’s because, as shown above, the references render the challenged claims unpatentable and the Examiner never applied them. (Ex. 1002); *see e.g., Comcast Cable Commc’ns LLC v. Promptu Sys. Corp.*, IPR2018-00342, Paper 13 (P.T.A.B. July 19, 2018) (declining to deny institution under §325(d) because prior art was not applied).

X. MANDATORY NOTICES, GROUNDS FOR STANDING, AND FEE PAYMENT

A. Real Parties-In-Interest (37 C.F.R. §42.8(b)(1))

Imperative Care, Inc. is the real parties in interest for Petitioner.

B. Related Matters (37 C.F.R. §42.8(b)(2))

PO recently filed suit alleging that Petitioner's Symphony system infringes the '011 patent, as well as U.S. Patent Nos. 11,974,910; 11,969,333; 11,554,005; 11,744,691; 11,844,921; 11,697,012; and 11,865,291. *Inari Medical, Inc. v. Imperative Care, Inc.*, No. 24-cv-3117 (N.D. Cal., filed May 22, 2024). The court has not set a schedule or a trial date in the litigation.

C. Lead and Backup Counsel (37 C.F.R. §42.8(b)(3))

Petitioner provides the following designation of counsel, all of whom are included in Customer No. 20,995 identified in Petitioner's Power of Attorney.

Lead Counsel	Back-up Counsel
Joshua J. Stowell (Reg. No. 64,096) Joshua.Stowell@knobbe.com BoxImperative011@knobbe.com Knobbe, Martens, Olson, & Bear, LLP Postal and Hand-Delivery Address: 2040 Main St., 14th Floor Irvine, CA 92614 Telephone: 949-760-0404 Facsimile: 949-760-9502	Joseph R. Re (Reg. No. 31,291) Joe.Re@knobbe.com Brian C. Barnes (Reg. No. 75,805) Brian.Barnes@knobbe.com Knobbe, Martens, Olson, & Bear, LLP Postal and Hand-Delivery Address: 2040 Main St., 14th Floor Irvine, CA 92614 Telephone: 949-760-0404 Facsimile: 949-760-9502

D. Service Information (37 C.F.R. §42.8(b)(4))

Please direct all correspondence to lead counsel and back-up counsel at the addresses shown above. Petitioner also consents to electronic service by email to BoxImperative011@knobbe.com.

E. Grounds for Standing (37 C.F.R. §42.104)

Petitioner certifies that the ’011 patent is available for IPR and that Petitioner is not barred or estopped from requesting IPR on the identified grounds. This Petition is being filed within one year of service of the Complaint in the Litigation.

F. Payment of Fees (37 C.F.R. §42.15(a))

The fee for this petition has been paid. Additional fees may be charged to Deposit Account 11-1410.

XI. CONCLUSION

For the reasons above, Petitioner has established a reasonable likelihood of prevailing in showing that at least one or more claims are unpatentable as anticipated or obvious and, therefore, requests that the Board institute an *inter partes* review.

Dated: July 8, 2024 By: */Joshua J. Stowell/*

Joshua J. Stowell (Reg. No. 64,096)
Joseph R. Re (Reg. No. 31,291)
Brian C. Barnes (Reg. No. 75,805)

KNOBBE MARTENS OLSON & BEAR, LLP
Attorneys for Petitioner Imperative Care, Inc.

CERTIFICATE OF COMPLIANCE

Pursuant to 37 C.F.R. § 42.24(d), the undersigned certifies that this PETITION FOR *INTER PARTES* REVIEW OF U.S. PATENT NO. 11,697,011 contains 12,718 words according to the word-processing program used to prepare this paper. The foregoing word count complies with the 14,000-word type-volume limit specified by 37 C.F.R. § 42.24(a)(1).

Dated: July 8, 2024 By: */Joshua J. Stowell/*
Joshua J. Stowell (Reg. No. 64,096)

KNOBBE MARTENS OLSON & BEAR, LLP

CERTIFICATE OF SERVICE

The undersigned hereby certifies that on the date below a copy of this **PETITION FOR *INTER PARTES* REVIEW OF U.S. PATENT NO. 11,697,011, PETITIONER'S POWER OF ATTORNEY, AND EXHIBITS 1001-1011**, were served by Priority Mail Express on the Patent Owner at the correspondence address of record for the subject patent as follows:

PERKINS COIE LLP
P.O. BOX 1247
PATENT PROCUREMENT
SEATTLE, WA 98111-1247

A courtesy copy is being sent by email on this day to Patent Owner's counsel of record in the Litigation as follows:

Amanda Tessar Perkins Coie LLP 1900 Sixteenth Street Suite 1400 Denver, CO 80202 303-291-2357 Email: atessar@perkinscoie.com	Ramsey M. Al-Salam Perkins Coie LLP 1201 Third Avenue Suite 4000 Seattle, WA 98101-3099 206-359-8000 Email: ralsalam@perkinscoie.com
Daniel T. Keese DKeese@perkinscoie.com Perkins Coie LLP 1120 NW Couch Street, 10th Floor Portland, Oregon 97209-4128 Telephone: 503.757.2000	Bingjie Li BLi@perkinscoie.com Perkins Coie LLP 3150 Porter Dr. Palo Alto, CA 94304-1212 Telephone: 650.838.4754

Dated: July 8, 2024 By: /*Joshua J. Stowell*/
Joshua J. Stowell (Reg. No. 64,096)
KNOBBE MARTENS OLSON & BEAR, LLP