UNITED STATES PATENT AND TRADEMARK OFFICE

BEFORE THE PATENT TRIAL AND APPEAL BOARD

IMPERATIVE CARE, INC.,
Petitioner,

v.

INARI MEDICAL, INC.,
Patent Owner.

Case No. IPR2024-01157
U.S. Patent No. 11,697,011

PATENT OWNER RESPONSE

TABLE OF CONTENTS

EXHIBIT LIST iv

I. INTRODUCTION 1

II. BACKGROUND 5

A. Overview of the ’011 Patent 5

B. Claims 9

C. Prosecution history 10

D. Asserted Art 11

1. Schaffer 11

2. Hartley 20

3. Eller 20

E. Person of Ordinary Skill in the Art (POSA) 22

III. Claim Construction: “Filament” 24

IV. CLAIMS 1-9 ARE NOT ANTICIPATED BY SCHAFFER (GROUND 1) 35

A. Schaffer Fails to Disclose a Filament that “Circumferentially Constricts” 36

B. Schaffer Fails to Disclose a “Filament.” 39

V. CLAIMS 1-9 ARE NOT OBVIOUS OVER SCHAFFER ALONE (GROUND 2), IN VIEW OF HARTLEY (GROUND 3), OR IN VIEW OF ELLER (GROUND 4) 45

A. Petitioner’s Stated Motivation to Modify Schaffer or Combine Schaffer with Hartley or Eller Is Contradicted by Schaffer and the Statements of Petitioner and Its Expert 46

B. Petitioner’s Proposed Modifications Would Change Schaffer’s Principles of Operation 52

1. Substituting Hartley's string or Eller's wire member for Schaffer's actuating members would prevent forcible disengagement. 54

2. Substituting Hartley's string or Eller's wire member for Schaffer's actuating members would compromise the ease of manufacturing and durability of Schaffer's valve. 55

C. Even Assuming Petitioner's Stated Motivations to Form a Better Seal and Avoid the Formation of Gaps, Petitioner Does Not Explain Why a POSA Would not Use Any of the Alternatives to Substituting that It Admits Would Work to Improve Schaffer's Seal. 60

D. Petitioner's Proposed Modification or Substitution of Hartley's String or Eller's Wire Member for Schaffer's Actuating Members Is Not a Simple Substitution 63

VI. CLAIMS 1-3, 5-6, 9 ARE NOT OBVIOUS OVER HARTLEY IN VIEW OF ELLER (GROUND 5) 68

A. The Combination of Hartley and Eller Fails to Disclose an "Actuator [that] Comprises a First Member coupled to the First End of the Filament and a Second Member Coupled to the Second End of the Filament" 69

B. A POSA Would Not Have Been Motivated to Modify Hartley in View of Eller Because the Proposed Modification Would Change Hartley's Principle of Operation And Render Its Detent System Inoperable for Its Intended Purpose 70

VII. DEPENDENT CLAIM 3 IS NOT ANTICIPATED BY SCHAFFER (GROUND 1) OR RENDERED OBVIOUS BY SCHAFFER, HARTLEY, OR ELLER (GROUNDS 2-5) 73

VIII. CONCLUSION 74

TABLE OF AUTHORITIES

CASES

Adidas AG v. Nike, Inc.,
963 F.3d 1355 (Fed. Cir. 2020) 52

Hill-Rom Services, Inc. v. Stryker Corp.,
755 F. 3d 1367 (Fed. Cir. 2014) 25

In re Chudik,
851 F.3d 1365 (Fed. Cir. 2017) 40, 41, 44

Kyocera Senco Indus. Tools Inc. v. Int'l Trade Comm'n,
22 F.4th 1369 (Fed. Cir. 2022) 25

Plas-Pak Indus. V. Sulzer MixPak
AG, 600 Fed.App'x. 755 (Fed. Cir. 2015) 53, 54

SRI Int'l, Inc. v. Cisco Sys., Inc.,
930 F.3d 1295 (Fed. Cir. 2019) 40

Virtek Vision Int'l v. Assembly Guidance Sys.,
97 F.4th (Fed. Cir. 2024) .....passim

EXHIBIT LIST

	Petitioner's Exhibits
Exhibit	**Description**
1001	U.S. Patent No. 11,697,011 ("the '011 Patent")
1002	'011 Patent Prosecution History Excerpt
1003	Expert Declaration of Troy Thornton
1004	Resume of Troy Thornton
1005	U.S. Patent Publication US 2003/0225379 A1 to Schaffer et al. ("Schaffer")
1006	U.S. Patent Publication US 2003/0116731 A1 to Hartley ("Hartley")
1007	U.S. Patent No. 9,980,813 B1 to Eller ("Eller")
1008	Drawings Submitted During Prosecution of U.S. Patent Application No. 10/371,190 dated June 18, 2003
1009	U.S. Patent No. 5,429,616 to Schaffer ("Schaffer '616")
1010	U.S. Patent Publication US 2011/0144592 A1 to Wong et al. ("Wong")
1011	U.S. Patent Publication US 2015/0173782 A1 to Garrison et al. ("Garrison")

	Patent Owner's Exhibits
Exhibit	**Description**
2001	Declaration of Paul J. Zalesky
2002	Merriam-Webster's Collegiate Dictionary (11th ed. 2014)
2003	New Oxford American Dictionary (3rd ed. 2010)
2004	U.S. Patent Application Publication No. 2018/0193043
2005	Deposition Transcript of Troy Thornton (September 30, 2024)
2006	U.S. Patent No. 7,682,380 to Thornton ("Thornton")
2007	Deposition Transcript of Troy Thornton (March 19, 2025)
2008	Supplemental Declaration of Paul J. Zalesky
2009	Merriam-Webster's Collegiate Dictionary (11th ed. 2014)

I. INTRODUCTION

Petitioner has failed to demonstrate that any one of Claims 1-9 of the '011 Patent are unpatentable. The '011 Patent discloses a "garrote valve" that "provides convenient, single-handed operation [that] allows the user to easily and quickly swap different tools being used through the valve without compromising hemostasis and therefore simplifying the procedure." EX1001, 5:54-60. The '011 Patent discloses this unique "garrote valve" design that includes a filament that seals a lumen in a tubular member by constricting the tubular member, either in the form of a loop that constricts by reducing in diameter or bights, which by definition are formed from slack. EX2008, ¶¶77-80. In other words, the '011 Patent discloses a filament capable of generally conforming to the shape of the tube as it constricts to provide a robust seal and, as it expands, to loosen to allow the tube's lumen to open. *Id.* at ¶84. In accordance with that disclosure, the sole independent Claim 1 recites a valve comprising, *inter alia*, a "constricting mechanism including at least one filament" wherein "the filament circumferentially constricts the lumen to create a seal."

In contrast, Petitioner's primary reference for Grounds 1-4, Schaffer, takes a different approach. It does not disclose, in name or concept, a garrote valve. Schaffer instead discloses applying compression with actuating members that are designed not to conform to the shape of the tube being compressed. Those actuating members, either alone or in combination, are thus not a "filament" and do not

"circumferentially constrict[a] lumen to create a seal" as recited in Claim 1. Instead, to effectuate a seal using its non-conforming actuating members, Schaffer's design employs an internal sealing member 165 including "a material 166 that is highly elastic, deformable, compliant and yet virtually non-compressible" (EX1005, ¶[0054]) and that "seals around a variety of profile shapes 192 and diameters 194 of the lumen 193 when at least one side of compressive force 67 is exerted upon the central region 195 with respect to the central portion 110 of the containment structure 160." *Id*. at ¶[0060]; EX2008, ¶¶131-134. Rather than filaments capable of conforming to the shape of the tube as those members apply compression, Schaffer's design takes a fundamentally different approach, relying upon an internal highly compliant seal member 165 that conforms to the shape of the lumen or tools within the lumen as the seal member is compressed.

Schaffer's design choice to apply compression with non-conforming actuating members and sealing with an internal conforming sealing member is a fundamentally different principle of operation from the '011 Patent using a filament. Schaffer's nonconforming actuating members allow for precise control because the actuating members "forcibly disengage" the sealing member so that the highly compliant material can expand and open the valve. EX2008, ¶¶94-95. In short, Schaffer does not involve a garrote valve at all. The rigid actuating members also make Schaffer's valve more durable and easier to manufacture. *Id*. at ¶¶159-69.

Accordingly, Ground 1 (anticipation by Schaffer) fails first because Petitioner has failed to demonstrate that Schaffer discloses "wherein the filament circumferentially constricts the lumen to create a seal" as recited in Claim 1. Instead, Petitioner and its expert recognize that Schaffer's design does not "circumferentially constrict." Petition, pp.32, 70; EX1003, ¶¶75, 142. Petitioner's assertion that Schaffer's design simply "constricts" is insufficient as a matter of law to demonstrate anticipation by Schaffer of the express claim language "circumferentially constricts."

Similarly, Ground 1 further fails because Petitioner has failed to demonstrate that Schaffer discloses a "filament" under either party's proposed claim construction. Petitioner proposes that the term filament means "at least 'one or more threads, lines, cords, ropes, ribbons, flat wires, sheets, or tapes'" (Petition, p.14) and then asserts that Schaffer discloses U-shaped actuating members that "***resemble***" a "ribbon, flat wire, sheet, or tape" (Petition, p.27). But even accepting Petitioner's assertion, "resembling" an express claim limitation, without more, is insufficient to anticipate that limitation. Ground 1 fails for that reason alone. Regardless, as set forth in Patent owner's proposed construction, the '011 Patent confirms that the term "filament" should be accorded its plain and ordinary meaning, namely, "a thin, flexible length of material formed by one or more strands of material." Schaffer's

non-conforming U-shaped actuating members also fail to disclose a "filament" under the term's plain and ordinary meaning because they are rigid.

Grounds 2, 3, and 4 (obviousness over Schaffer alone, or with Hartley or Eller) fail because a POSA would not have been motivated to replace Schaffer's nonconforming U-shaped actuating members with a filament, including a flexible string or wire as disclosed in Hartley and Eller, respectively. Petitioner's purported motivation to combine ignores that Schaffer's valve forms a complete seal (as Petitioner admits), namely Schaffer's internal sealing member 165 that is "so compliant that it forms a seal around the instruments 260 even if the instruments 260 are irregularly shaped" by conforming to the shape of the instruments. EX1005, ¶[0068]. Instead, Petitioner's purported motivation to combine relies on its expert's testimony that Schaffer's valve would form a poor seal despite Schaffer's express disclosure that its valve seals completely. *See*, *e.g.*, Petition, pp.36, 44. But, a POSA would not understand Schaffer's valve to form those gaps and would not have redesigned Schaffer to address gaps that do not exist particularly where the proposed modification is contrary to Schaffer's fundamental principle of operation, namely, using nonconforming compression members with an internal highly compliant seal member. Indeed, Petitioner's expert admitted at deposition that if Schaffer forms a complete seal, there would be no need to modify Schaffer's U-shaped actuating members. EX2007, 116:18-117:2. In sum, Petitioner's proposed modifications to

Schaffer either alone or in combination with Hartley or Eller employ impermissible hindsight—requiring a POSA to manufacture a non-existent problem with Schaffer (poor sealing), then modify Schaffer in view of that non-existent problem in a manner that fundamentally changes Schaffer's principle of operation.

Ground 5 (obviousness over Hartley and Eller) fails because Hartley and Eller do not disclose a filament having a "first end" coupled to a "first member" of an actuator and a "second end" coupled to a "second member" of the actuator. Instead, both Hartley and Eller disclose attaching a string or wire to a ***single*** actuator. EX2008, ¶¶66-67, 119-24. Paper 7, p.42 ("We agree with Patent Owner that Petitioner has not established that the modification of Hartley in view of Eller includes an actuator with a 'first member' and a 'second member' as claimed … [t]he alleged 'first member' and 'second member' cited by Petitioner … are simply portions of a single, unitary rotary actuator in Hartley.").

For those and the other reasons set forth below, Petitioner has failed to demonstrate that any of Claims 1-9 are unpatentable under any of Grounds 1-5.

II. BACKGROUND

A. Overview of the '011 Patent

The '011 Patent explains that while "traditional hemostasis valves are greatly beneficial for intravascular access, they have some drawbacks. For example, some valves may not seal adequately for all interventional applications or tools, and/or the

operation of some valves may be complicated for operator use." EX1001, 1:48-52. The '011 Patent addresses those drawbacks by providing a new hemostasis valve design that provides for easy one-handed operation and a strong seal around a variety of different-sized instruments, both of which are important for hemostasis valves in many applications, including for use with aspiration in large-bore thrombectomy systems, an embodiment of the '011 Patent. EX2008, ¶34; EX1001, 16:20-44 (incorporating, *e.g.*, U.S. Patent Application 15/498,320, which was published as US2018/0193043 (EX2004) by reference).

Specifically, the '011 Patent discloses that "[t]he present disclosure relates to a valve that can be used as a hemostasis valve. This valve, also referred to herein as a garrote valve, can seal with or without a tool extending through the valve." EX1001, 5:51-54.[1] The design and functionality of this hemostasis valve enables medical professionals to operate the valve with one hand while maintaining a robust seal to prevent blood loss during procedures. EX2008, ¶36; EX1001, 5:51-65. The design enables such ease of use while maintaining an effective and strong seal, for example, under a pressure differential caused by vacuum during aspiration

[1] Merriam-Webster defines "garotte" to mean "an implement (as a wire with a handle at each end) for strangulation." EX2002, at 516.

thrombectomy procedures. EX2008, ¶36; EX1001, 1:61-2:10, 4:1-10, 5:5-19, 5:51-6:2, 16:20-44.

In particular, the design allows for quicker and more effective sealing of large-bore catheters for thrombectomy in large veins and pulmonary arteries, such as for treating deep vein thrombosis or pulmonary embolism. EX2008, ¶36. The hemostasis valve can be a component of a delivery system that includes a catheter. EX1001, 6:21-25. A catheter can include a shaft, identified as an elongated sheath, that has a proximal end connecting to the valve and a distal end. *Id*. at 6:25-30. The shaft defines a catheter lumen that extends from the proximal end to the distal end. *Id*. at 6:30-32. The catheter can be designed in various shapes and sizes and is typically constructed from biocompatible materials to allow for flexibility and accommodate a range of outer diameters. *Id*. at 6:32-42. When used with vacuum aspiration thrombectomy, the ease of use and robust seal are particularly important. EX2008, ¶¶34-37; EX1001, 1:61-2:10, 4:1-10, 5:5-19, 5:60-6:2.

To address those issues and provide the benefits of reduced blood loss and one-handed operation, the '011 Patent discloses a "garrote" valve, that includes a constricting mechanism having an actuator and at least one filament. *Id*. at 8:1-4. The actuator may be a manual button or an automated system, enabling easy one-handed use to seal effectively when needed. *Id*. at 8:5-8. To that end, the filament is designed to circumferentially constrict the elongated member, collapsing it to create

a seal when the actuator is engaged, to ensure effective hemostasis during medical procedures. *Id*. at 8:8-12.

The actuator can be biased to seal. *Id*. at 8:35-37. In the first configuration, depicted in FIG. 2 below, the elongated member is collapsed or sealed, with buttons in an undepressed position. *Id*. at 8:37-43. Springs bias the buttons towards the first configuration. *Id*. at 8:43-53. The springs can be of various types, such as compression or tension springs. *Id*. This design ensures the mechanism remains in a predetermined state (sealed or open) based on the biasing force applied by the springs. *Id*.

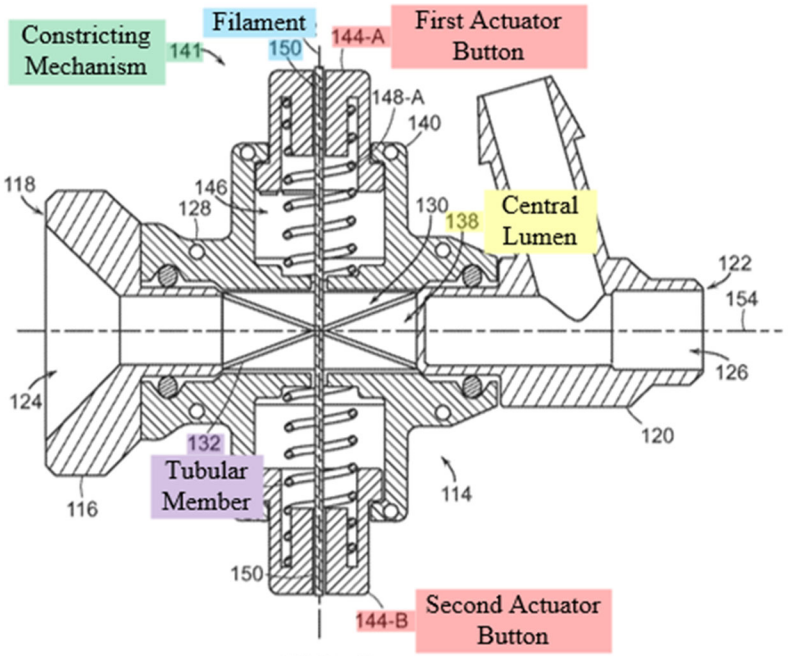

FIG. 2

B. Claims

Claim 1 of the '011 Patent recites:

> A valve, comprising:
>
> a tubular member defining a lumen configured to slidably receive a catheter;
>
> a constricting mechanism including at least one filament and an actuator coupled to the filament, the filament comprising a first portion extending around at least a portion of the tubular member and a second portion having a first end extending from the first portion in one direction and a second end extending from the first portion in another direction, and the actuator comprises a first member coupled to the first end of the filament and a second member coupled to the second end of the filament, wherein the first member and the second member of the actuator are moveable between (a) a first position wherein the filament circumferentially constricts the lumen to create a seal and (b) a second position wherein the filament is moved to at least partially open the lumen; and
>
> a biasing system configured to bias the first member and the second member to the first position.

A POSA would understand that the innovative hemostasis valve design of Claim 1 significantly enhances the sealing capability of the catheter lumen compared to previous valves in the art, particularly around tools of varying shapes and sizes, while simplifying operator use at the same time. EX2008, ¶¶49-51. Specifically, the garrote or "constricting mechanism" of Claim 1 includes "at least one filament and an actuator coupled to the filament." The "filament" further comprises "a first portion extending around at least a portion of the tubular member" and a "second portion having a first end extending from the first portion in one direction and a second end extending from the first portion in another direction." The actuator comprises two distinct members, namely, "a first member coupled to the first end of the filament and a second member coupled to the second end of the filament."

C. Prosecution history

The Examiner issued a Notice of Allowance on December 14, 2022. Both Hartley and Eller, which Petitioner relies upon here, were before the examiner during prosecution. EX1001, References Cited. The examiner also considered Wong (EX1010), which like Schaffer here, includes two push button actuators and a biasing spring. EX1002, p.60. In the Notice of Allowance, the Examiner stated that "[t]he claims in this application have been allowed because the prior art of record fails to disclose either single or in combination the claimed medical device/method." *Id*. at p.59. The Examiner specifically found that Hartley "fails to disclose that a

biasing system configured to bias the first member and the second member to the first position." *Id*. at p.60. The Examiner found that "Wong fails to disclose a filament as required in the claimed invention" and that "one skilled in the art would not use the device of Har[t]ley to combine with Wong to produce the claimed invention." *Id*.

D. Asserted Art

1. Schaffer

Schaffer discloses a hemostasis valve that employs a different method of sealing from the '011 Patent. To effectuate sealing, Schaffer discloses a plurality of sealing members internal to a seal module 100, shown as seal members 165, 170, and 180 in Figure 12 reproduced below.

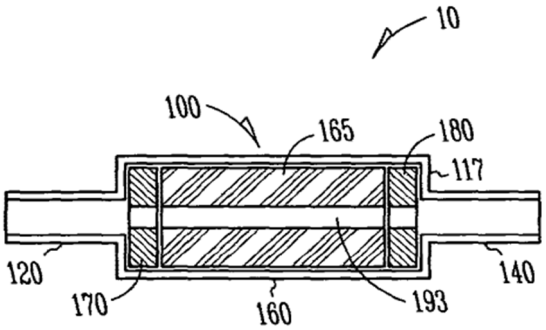

Fig. 12

Schaffer's sealing members are central to Schaffer's method of forming a seal and sealing member 165 is included in every embodiment. EX2008, ¶62. Specifically, Schaffer discloses that "[t]he third central seal member 165 is sized and configured to maintain an open lumen 193 when no compressive force 67 is

applied." EX1005, ¶[0054]. So, to effectuate a seal, actuating members 55 are "forcibly pushed against the central portion of the seal module 100, [and] the compressive force 67 of the actuating member 55 against the outer wall 27 of the containment structure 160 inwardly depresses or collapses the third central seal member 165." *Id.* at ¶[0055]. The internal seal member 165 "includes a material 166 that is highly elastic, deformable, compliant and yet virtually non-compressible." *Id.* at ¶[0054]. And, that "highly compliant third central seal member 165 seals around a variety of profile shapes 192 and diameters 194 of the lumen 193 when at least one side of compressive force 67 is exerted upon the central region 195 with respect to the central portion 110 of the containment structure 160." *Id*. at ¶[0060]. In other words, Schaffer employs actuating members 55 that apply an external compressive force 67 to a seal module 100 without conforming to the outer surface of the seal module, and the highly-compliant internal seal member 165 conforms to various shapes and sizes as the actuating members 55 compress it to seal a lumen as illustrated throughout Schaffer. See, for example Figures 16-19, reproduced below.

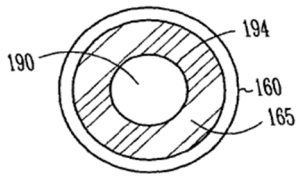

Fig. 16

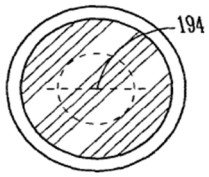

Fig. 17

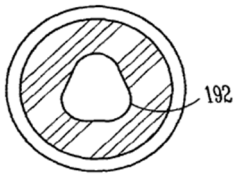

Fig. 18

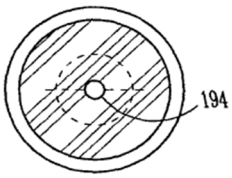

Fig. 19

Schaffer further discloses that a "compressive load may be supplied by a movable, sliding or hinged, actuator 50 that maintains a compressive load upon the third central seal member 165." *Id*. at ¶[0060].

Schaffer also discloses an embodiment having no actuating members at all and instead relies upon the sealing members to form a seal. The embodiment shown in Figures 12-15, "requires no compressive load for use in sealing the stasis valve 10 closed." *Id.* at ¶[0063]. Instead, as illustrated in Schaffer's Figures 13 and 14, below, "retrograde flow 270 forces the first seal member 170 toward the third central seal member 165 in the containment structure 160. As the first seal member 170 moves distally, or toward the second seal member 180 under the influence of the pressure from the gas or fluid, the third central seal member 165 is compressed." *Id.*

¶[0065]. Sealing members 170 and 180 do not require additional compressive force from an actuating member in any embodiment. *Id.* at ¶[0057] ("The first and second septum seal members 170 and 180, allow smooth and accurate movement of instruments since there is no additional compressive force or load required to complete the seal.").

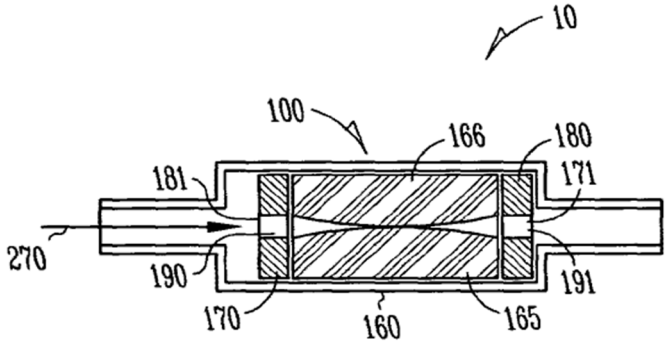

Fig. 13

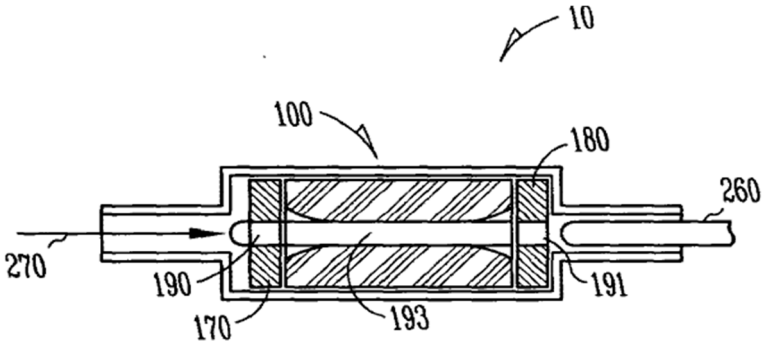

Fig. 14

For the other embodiments, Schaffer discloses that there are several advantages to using a non-conforming actuating members 55 with an internal sealing member 165 including improved durability and control and ease of manufacture.

EX2008, ¶65. Indeed, every embodiment in Schaffer operates in that manner. See for example, Figures 4 showing seal member 165:

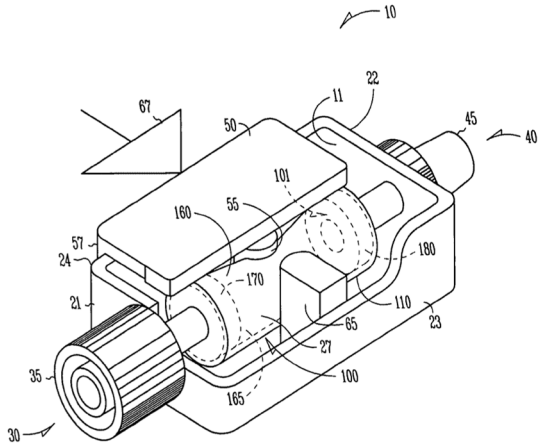

Fig. 4

Figures 6-8 showing seal member 165:

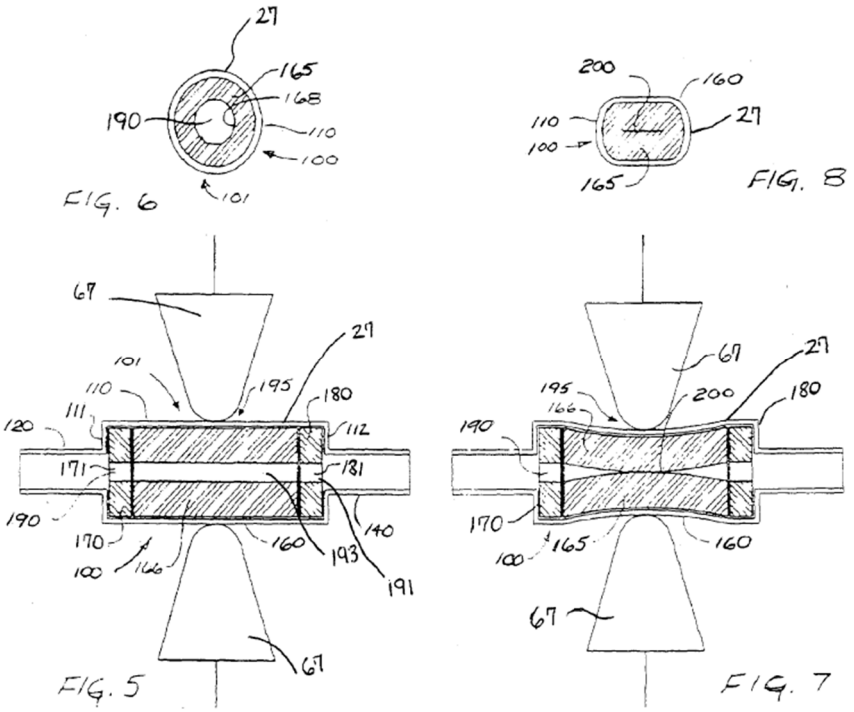

Figures 9A-10B showing seal member 165:

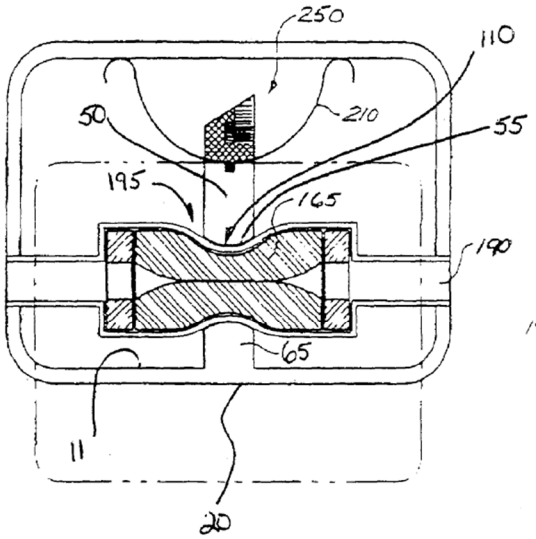

FIG. 10A

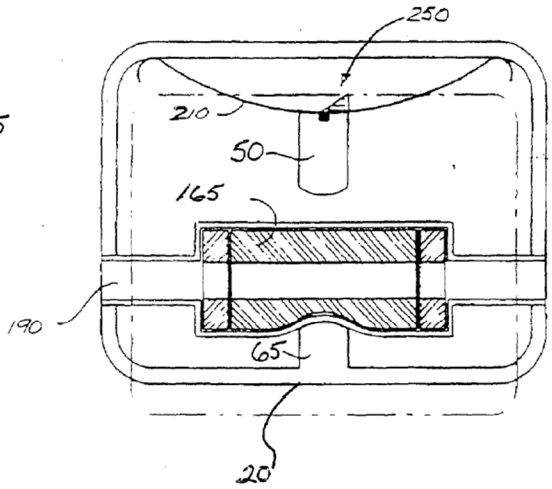

FIG. 9A

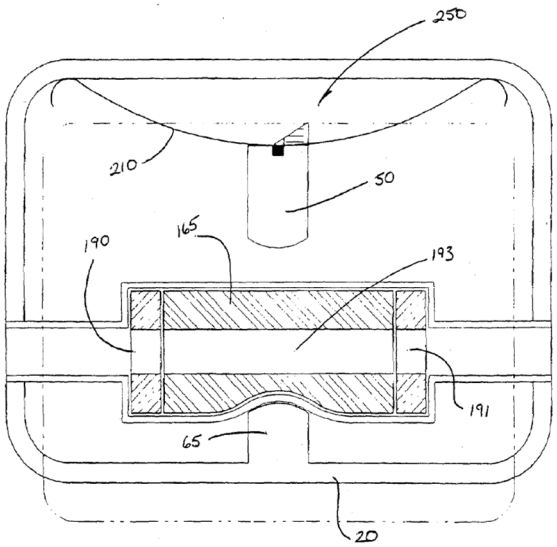

FIG. 9B

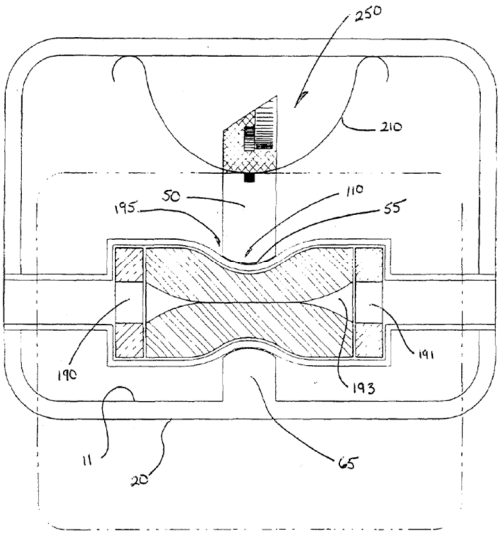

FIG 10B

Figure 12-15: showing seal member 165:

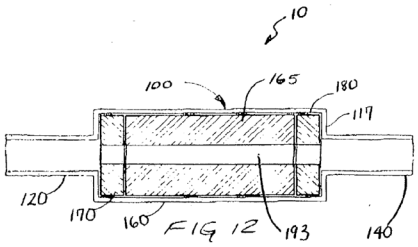

FIG 12

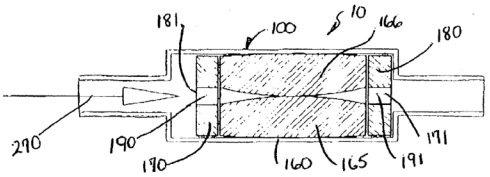

FIG. 13

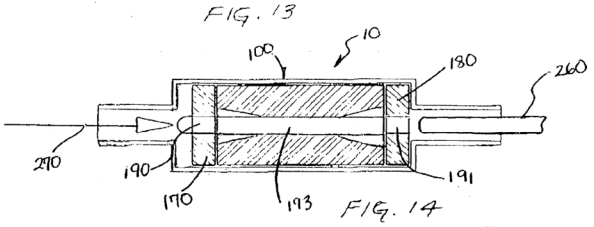

FIG. 14

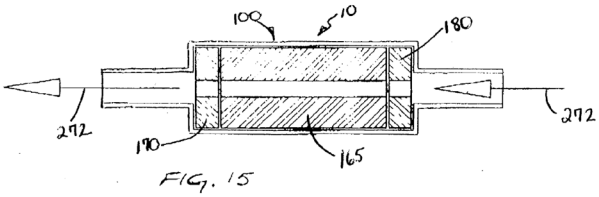

FIG. 15

Figure 23-26, showing seal member 165:

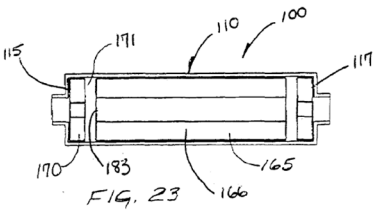

FIG. 23

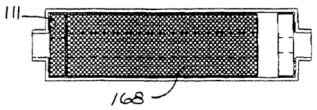

FIG. 25

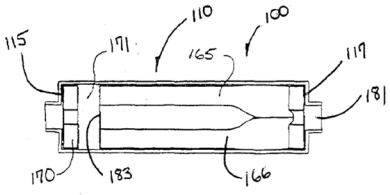

FIG. 24

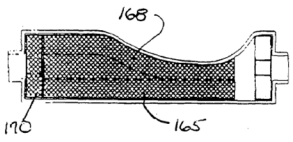

FIG. 26

Figure 27, showing seal member 165:

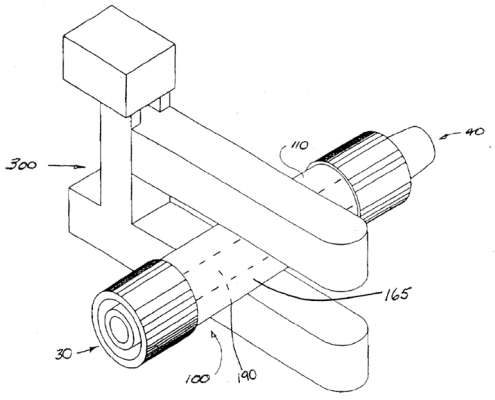

FIG. 27

Figures 28-29, showing seal member 165:

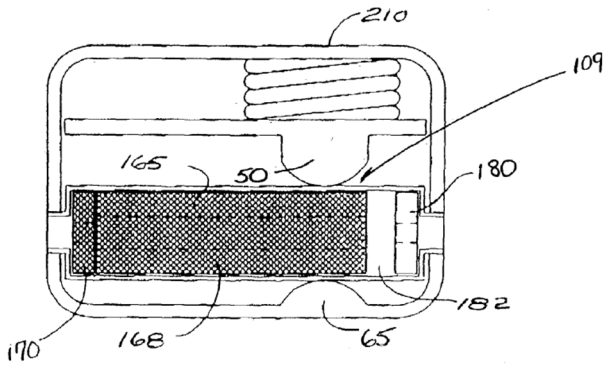

FIG. 28

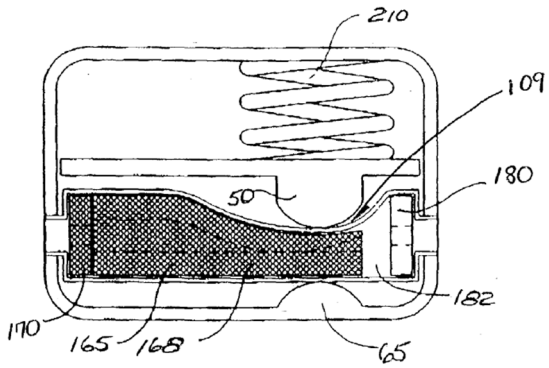

FIG. 29

And, for the primary embodiment relied upon by Petitioner shown in Figures 30-34, Schaffer references seal member 165 (EX1005, ¶¶ [0075], [0077]) and discloses that "[t]he seal module 100 is formed of one or more seal members, as discussed above. In another option, the seal module 100 and/or any of its respective seal members can be formed of one or more materials, including their relative properties, as discussed above" *Id.* at ¶[0075]. Schaffer further discloses that the seal member 165 is made from the same materials as the other embodiments. *Id.* at ¶[0081]. Like all the other embodiments, Schaffer further discloses how the seal member 165 operates in the embodiment of Figures 30-34:

> The lumen 193 of the third seal member 165 is at least partially collapsed by the compressive force 67 [and actuator] movement allows each engaged actuating member 55 to forcibly disengage opposing outer walls 27 of the seal module 100 allowing the portion 108 of the containment structure 160 to retract to an uncollapsed configuration where gases and fluids can pass therethrough. As the actuator 50 is disposed away from the portion 108 of the seal module 100, the lumen 193 of the third seal member 165 is able to retract in an unsealed configuration.

Id. at ¶[0077].

2. Hartley

Hartley discloses an access valve having a string 14 extending around a cylindrical elastomeric diaphragm 8 and attached by knots 16 and 18 to a single rotary actuator 12:

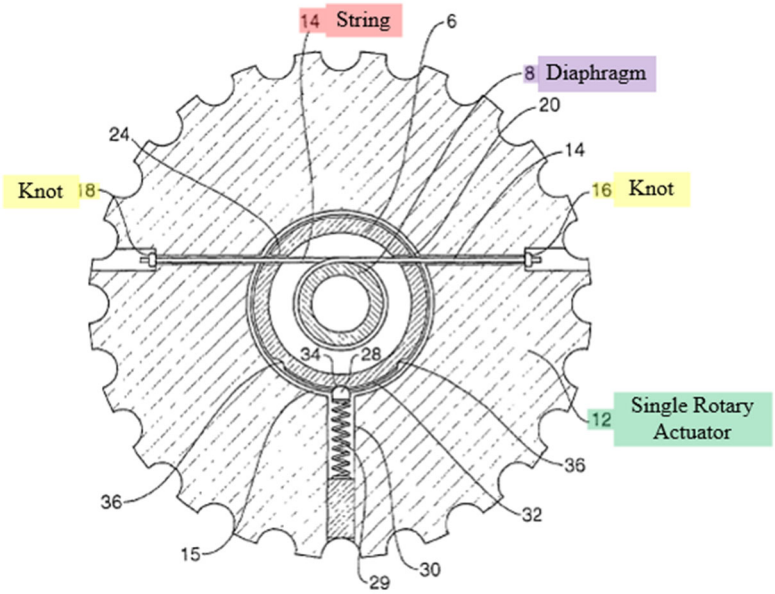

Fig 3

EX1006, ¶[0031]; EX2008, ¶¶66, 119-20. A POSA would understand the rotary actuator 12 to be a single integral piece such that the knots 16 and 18 are attached to the **same** rotary actuator 12. That single rotary actuator 12 controls movement of both ends of the string 14. *Id*.

3. Eller

Eller discloses a selective fluid barrier device 810 including a housing 816, an actuator 818, a sleeve 820, and a wire member 822 having "a first end 924 attached to the housing 816 … and a second end 926 attached to the actuator 818":

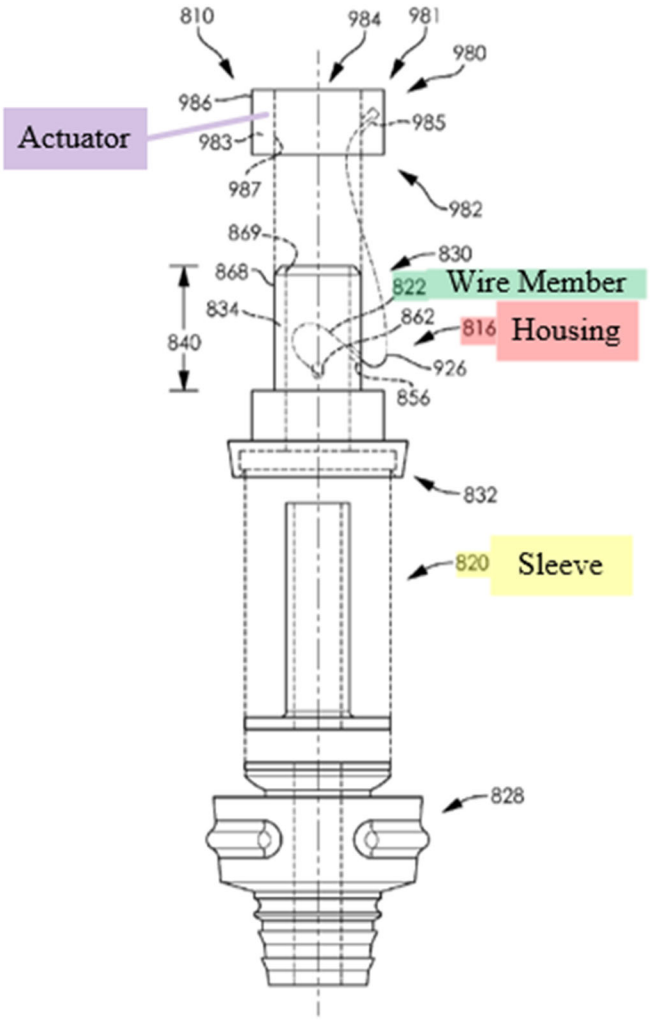

FIG. 20

EX1007, 23:50-62, 24:50-52. Eller discloses other embodiments with multiple wire members each having a first end attached to a housing and a second end attached to a single actuator. EX2008, ¶¶67, 121-24. In each of these embodiments, the wire members have a first end coupled to a housing and a second end coupled to an actuator. *Id.* Movement (e.g., rotation) of the actuator pulls only the second end of the wire member while the first end remains stationary. *Id*. Accordingly, movement of the single actuator controls movement of the wire member.

E. Person of Ordinary Skill in the Art (POSA)

A POSA in September 2017 would have had an undergraduate degree in mechanical engineering or a related engineering discipline and 2 to 4 years of product design or engineering experience designing medical devices in the field of the '011 Patent. A person with less education but more relevant practical experience, or more relevant education but less practical experience, may also meet this standard. EX2008, ¶¶68-69. The field of the '011 Patent is "hemostasis valves for use during intravascular procedures." *Id*. at ¶¶34-35; EX2007, 16:17-20.

While Petitioner's proposed definition of a POSA includes a similar level of education, Petitioner's definition omits any experience in designing medical devices at all, let alone in the field of the '011 Patent. Petition, p.13 ("[a] POSITA in September 2017 would have had an undergraduate degree in mechanical engineering or a related engineering discipline and 2-4 years of product design or engineering experience."). In fact, Petitioner's expert testified that a POSA would need no experience designing hemostasis vales, and no experience designing medical devices at all. EX2007, 180:5-25.

But, experience in the field of the invention is critical to designing a hemostasis valve. As Petitioner's own expert explained at deposition, the starting point to design or select a hemostasis valve is an understanding of the requirements of the particular medical procedure for which the valve will be used, as follows:

> Q. So then is it fair to say, in selecting a hemostasis valve for use with a procedure, to determine the design requirements for the hemostasis valve, you would need to understand the needs of the procedure?
> [Objections]
>
> THE WITNESS: I think, as engineers, we always design to the needs of the physician, the procedure, the environment, the sterilization plan, which was another design requirement I just thought of.
> BY MR. HAMILTON: Q. And all those requirements relate to the needs from the procedure; is that right?
> [Objections]
>
> THE WITNESS: Needs from the physician, the needs of the procedure, the needs of the patient.

EX2007, 24:5-21.

Petitioner's failure to include any medical device design experience is fatal to the Petition. A POSA, under Petitioner's definition, would have no understanding of why Schaffer is designed to seal via non-conforming actuating members that apply compression to an internal sealing member that conforms to various shapes and sizes and would have given no weight to the advantages of such a configuration or why a POSA would not have modified Schaffer to arrive at the claimed invention. Petitioner's arguments and reliance upon a declaration from that incomplete perspective should be afforded little or no weight.

III. Claim Construction: "Filament"

Claim 1 recites "a constricting mechanism including at least one filament" and wherein "the filament circumferentially constricts the lumen to create a seal." A POSA would understand that the term "filament" as recited in Claim 1 should be accorded its plain and ordinary meaning, "a thin, flexible length of material formed by one or more strands of material."

At deposition in related litigation, Petitioner's expert testified that the plain and ordinary meaning of "filament" includes that it is flexible. EX2005, 116:25 118:13, 122:17-21; 123:1-15, 125:17-25. Specifically, when questioned about the meaning of the term "filament" in U.S. Patent No. 11,744,691, which incorporates the disclosure of the '011 Patent and also claims a hemostasis valve including a "filament," Petitioner's expert testified that "in the ordinary meaning of filament, it has flexibility." *Id*. at 123:1-3. In other words, Petitioner's expert agrees that the plain and ordinary meaning of "filament" requires flexibility.

Because the plain meaning of the term filament requires flexibility, Petitioner argues here that the '011 Patent "reveal[s] a special definition" for the term "that differs from the meaning it would otherwise possess" because—according to Petitioner—the '011 Patent "provides examples of 'filaments' that demonstrate the patent is using the term 'filament' more broadly than the plain and ordinary meaning." Petition, p. 13. That is, Petitioner argues that Patent Owner acted as its

own lexicographer. *Id*. But Petitioner's arguments do not meet the standard needed to show lexicography, which requires clear and unambiguous disclosure sufficient to depart from the plain and ordinary meaning. *Kyocera Senco Indus. Tools Inc. v. Int'l Trade Comm'n*, 22 F.4th 1369, 1378 (Fed. Cir. 2022) ("To act as its own lexicographer a patentee must clearly set forth a definition of the disputed claim term other than its plain and ordinary meaning and must clearly express an intent to redefine the term"); *see also Hill-Rom Services, Inc. v. Stryker Corp.*, 755 F. 3d 1367, 1371 (Fed. Cir. 2014) (internal citations omitted) ("We depart from the plain and ordinary meaning of claim terms based on the specification in only two instances: lexicography and disavowal … The standards for finding lexicography and disavowal are exacting.").

1. Claim language

Petitioner provides no basis in the claims for its proposed departure from the plain meaning of the term filament. *See* Petition, pp.13-14 ("the claim language does not provide a POSITA with guidance on the meaning or structure of the claimed 'filament.'"). But the claim language that "the filament circumferentially constricts the lumen to create a seal" supports Patent Owner's proposed construction. A POSA would understand that, for the filament to "circumferentially constrict," it must be thin and flexible in accordance with Patent Owner's proposed construction for filament. EX2008, ¶¶71-76.

Indeed, Petitioner's own expert admits as much. In asserting that the limitation "circumferentially constricts" is obvious over Schaffer, Petitioner's expert explains that "the actuating members could be formed from a thin, flexible sheet or flat ribbon of aluminum or plastic so that they have the flexibility to conform to the outer surface of the cylindrical seal module." EX1003, ¶75. Petitioner's expert then explains that "[a]ctuating members with this type of structure and flexibility would circumferentially constrict the lumen of Schaffer's seal module when pulled in opposite directions by the actuator buttons." *Id*. In other words, Petitioner's expert asserts that for Schaffer's actuating members to "circumferentially constrict," the actuating members must be thin and flexible to conform to the outer surface of Schaffer's seal module. Thus, the express recitation in Claim 1 that "the filament circumferentially constricts the lumen to create a seal" supports that the term filament should be according its plain and ordinary meaning, "a thin, flexible length of material formed by one or more strands of material."

2. The specification.

Moreover, contrary to Petitioner's position, the examples of filaments in the '011 Patent further support that the '011 Patent has not redefined the term "filament" to depart from its plain and ordinary meaning of "a thin, flexible length of material formed by one or more strands of material." The '011 Patent provides examples of two general forms of filaments. First, the '011 Patent discloses filaments formed into

loops that reduce in diameter to constrict a lumen as shown in Figures 6 and 7. EX1001, 13:38-41 (referring to Figures 6-7, shown below, and reciting that "a diameter or size of the loop 604, or of the loops 704, 706 can decrease when the constricting mechanism 141 is moved from the second configuration to the first configuration.").

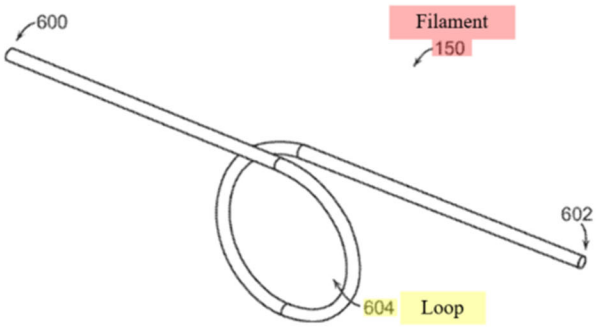

FIG. 6

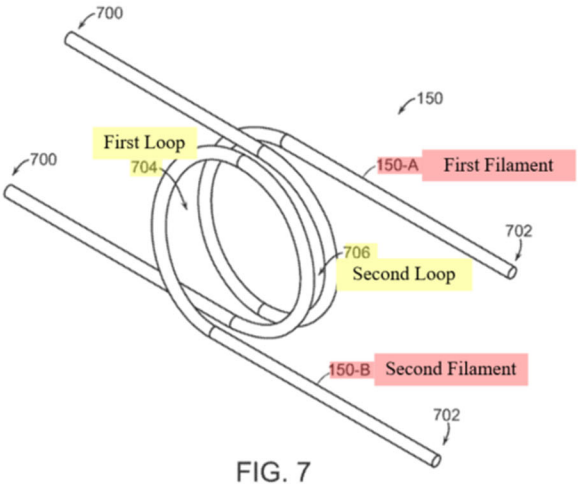

FIG. 7

Second, referring to Figures 8-9 shown below, the '011 Patent also discloses that "[i]n some embodiments, the filament 150 can be configured to form a bight 800, which bight 800 can be a single bight or multiple bights." EX1001, 13:42-44.

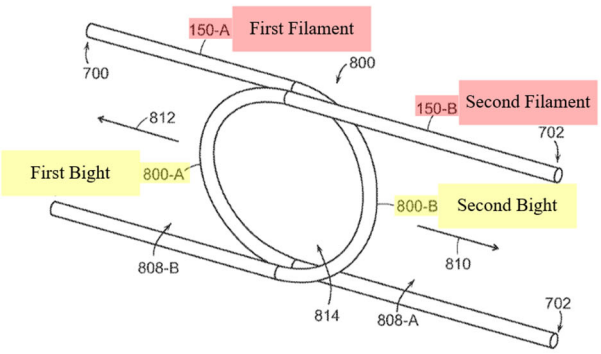

FIG. 8

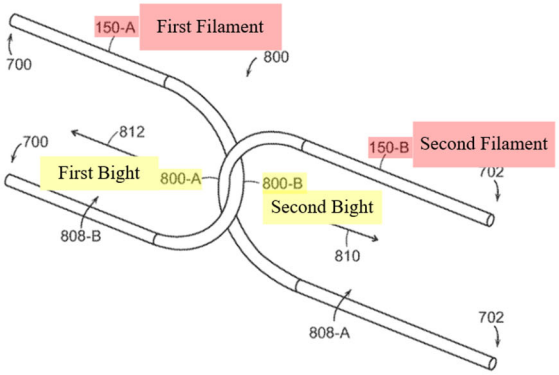

FIG. 9

As the Board found in the Institution Decision, for the loop embodiments, "a flexible filament is required (*i.e.*, a filament that is sufficiently flexible that it can decrease the size/diameter of the loop to constrict and seal the valve)." Paper 7, p.16. *See also*, EX2008, ¶79. But the Board questioned whether the bight embodiments require a flexible filament. *Id*. at pp.16-18. They do—a bight by definition is formed from slack and therefore must be flexible to form slack. EX2009, p.120 ("bight": a "slack part or loop in a rope"); EX2008, ¶80.

Indeed, forming slack is necessary for both the loop and bight embodiments disclosed in the '011 Patent. First, the '011 Patent discloses that when the buttons 144 are depressed to the open position of the valve, "the filament 150 is ***loosened***, thereby allowing the expansion of the elongate member 132 and the unsealing of the central lumen 138 of the elongate member 132." EX1001, 9:56-59 (emphasis added). A POSA would understand that when the filament is "loosened," the filament slackens and relaxes as tension is decreased therein. EX2008, ¶77. Merriam-Webster's Collegiate Dictionary defines "loose" as "not tightly drawn or stretched: ***slack***" and "being ***flexible***." EX2009, p.735 (emphasis added). Thus, the ability of the filament to flex or slack is a necessary property of the filament that allows the filament to "loosen" so that the elongate member can expand and unseal the valve. EX2008, ¶77. Accordingly, the specification supports that the filament must be flexible to "loosen" to allow for the expansion of the elongate member. The

filament's ability to flex is therefore not optional but necessary to the proper operation of the device, consistent with the plain and ordinary meaning of "filament."

Petitioner's purported examples of "inflexible" filaments are not filaments at all, but instead are simply lists of example materials from which a filament can be made or forms that the filament can take. None of those materials or forms supports that the '011 Patent has departed from the plain meaning of the term filament, let alone redefined the term as Petitioner urges.

At deposition, Petitioner's expert confirmed that every material and form of a filament in the '011 Patent is consistent the understanding that a filament is a "thin, flexible length of material formed by one or more strands of material." First, Petitioner's expert confirmed that the '011 Patent's disclosure that a "filament" can be formed from "a polymer, a synthetic, and/or a metal" or "can be nylon, stainless steel, nitinol, silicone, or the like" (EX1001, 9:11-13), does not indicate to a POSA how flexible or rigid the filament is. EX2007:125:2-17 ("The relative flexibility or the relative stiffness or rigidity is not clear from those three materials without knowing much more information."); EX2007, 125:19-126:4. Similarly, every disclosed form of the "filament" is also consistent with the plain meaning of the term filament to be "thin, flexible length of material formed by one or more strands of material." EX2008, ¶81.

Petitioner's expert summed up all the materials and forms disclosed in the '011 Patent as consistent with the plain and ordinary meaning of the term "filament," namely, "a thin, flexible length of material formed by one or more strands of material," as follows:

> Q. So the fact that the filament is made from any of the materials identified in this section we just discussed in column 9 or any of the forms set forth in this section in column 9 doesn't tell one of skill in the art how flexible or rigid the filament is, does it?
> MR. STOWELL: Objection. Misstates testimony.
> THE WITNESS: I think that's what I said earlier, that you would need to know more details about the material and the dimensions and the construction of those materials to be able to quantify or compare relative flexibility of one element versus another.

EX2007, 131:25-132:12. Petitioner's expert further testified as follows:

> Q: [O]ne skilled in the art could construct a filament out of any of those materials, in any of those forms – threads, lines, cords, rope, ribbon, flat wire, sheet or tape – that would be sufficiently flexible to loop around a lumen in a hemostasis valve; isn't that correct?
> A. As long as other elements, like the tube itself and the springs to actuate the filament, were part of the design process, then, I think, yes.

EX2007, 131:16-24. Such a disclosure of example materials or categories of form does not redefine or broaden the term filament from its plain and ordinary meaning.

3. Petitioner's proposed construction is improperly broad.

Petitioner's proposed construction of the term filament "to mean at least 'one or more threads, lines, cords, ropes, ribbons, flat wires, sheets, or tapes'" also cannot be correct because it is overly broad as demonstrated by Petitioner's inconsistent application of its construction. According to Petitioner, "Schaffer's U-shaped actuating members [shown in Figures 31-34] are a 'filament' as claimed in the '011 patent" because they "resemble a ribbon, flat wire, sheet, or tape." Petition, p.27. At deposition, Petitioner's expert testified regarding the arrangement shown in Figure 27 of Schaffer:

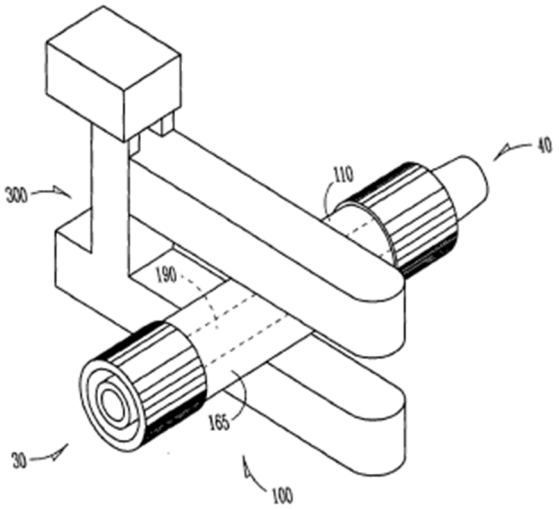

Fig. 27

In particular, Petitioner's expert testified as follows:

A. Yes. I believe the components above and below the member 110, the seal module 100 act to compress that seal module.

Q. Are those members that act to compress the seal module filaments?

> A. **I wouldn't call them filaments**. They are a separate tool or device, such as a clamp, forceps or hemostat.

EX2007, 202:7-14 (emphasis added). But the components of the clamp above and below the seal module 100 that act to compress the seal module "resemble" at least one of a "line," a "ribbon," a "flat wire," or a "sheet" according to Petitioner's proposed construction. Petitioner's proposed construction therefore cannot be right because it provides no basis for distinguishing what is or is not a filament, as demonstrated by the inconsistency between Petitioner's expert's application of the term to the different embodiments in Figures 27 and 30-34 of Schaffer.

4. Extrinsic evidence.

Furthermore, Merriam-Webster's Collegiate Dictionary defines a filament as "a single thread or a thin flexible threadlike object, process, or appendage." EX2002, p.467. *See also* New Oxford American Dictionary, EX2003, p.644 (filament: "a slender threadlike object or fiber."). These definitions confirm the plain and ordinary meaning of filament to a POSA: "a thin, flexible length of material formed by one or more strands of material." EX2008, ¶83.

Petitioner's expert has also compared the term "filament" in his own patent to a "thread-like element." Petitioner's expert confirmed at deposition that he is the first named inventor for U.S. Patent No. 7,682,380 (EX2006, hereafter "Thornton").

EX2007, 199:10-200:20. Thornton references Figure 1 and recites that "the coupling member 104 is shown as a filament or thread-like element." EX2006, 8:7-9.

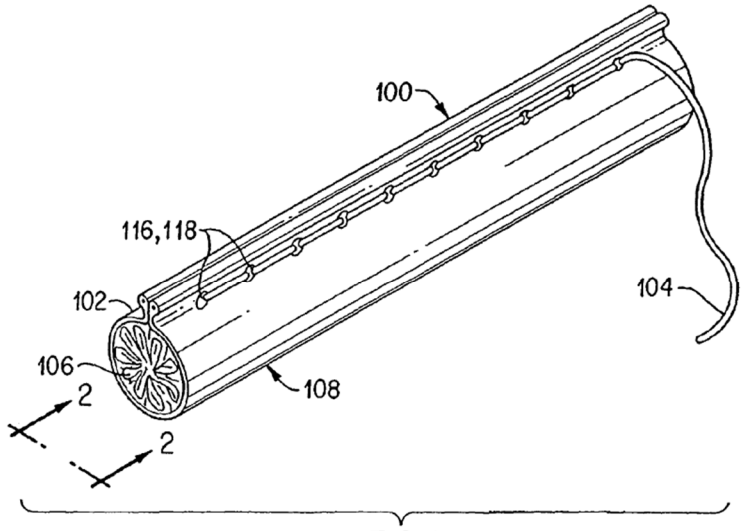

FIG. 1

Thornton also confirms that the filament is thin and flexible reciting that "coupling member (104) may be laced or threaded[.]" *Id*. at 8:53. And Thornton further discloses that its "filament or thread-like element" can be made from various polymers or metal and yet still be thin and flexible as follows:

> The thread-like coupling member (104) may also comprise ePTFE. Sutures of polyethers such as polyethylene terepthalate (DACRON® or MYLAR®) or polyaramids such as KEVLAR® or metal wire comprising nitinol, stainless steel or gold may also be used for the coupling member (104).

Id. at 9:18-22. Accordingly, Petitioner's own expert's use of the term "filament" supports that Patent Owner's proposed construction is the plain and ordinary meaning of the term.

5. A POSA would understand the degrees of flexibility required by the "filament" in the context of a hemostasis valve.

Finally, a POSA would understand the degree of "thin and flexible" required by the "filament" in the context of the '011 Patent. In the Institution Decision, the Board questioned how flexible a structure would need to be to qualify as a "filament" as claimed. Paper 7, p.15. While rigidity and flexibility exist along a spectrum, a POSA would readily understand the flexibility required for the claimed filament in the context of a filament to constrict a hemostasis valve when considering the claim language itself, the specification, and other evidence. EX2008, ¶84. In particular, the filament must be sufficiently flexible so that it can loosen, reduce in diameter when formed in a loop as shown in Figures 6-7, and slacken when formed in a bight as shown in Figures 8-9. *Id*. That is, a POSA would understand that, in the context of a hemostasis valve in the '011 Patent, the filament must be flexible to the degree necessary to slacken/loosen when the actuator is actuated (e.g., depressed) as disclosed in the specification. *Id*. As such, a POSA would be able to easily identify if a member is "a thin, flexible length of material formed by one or more strands of material" in the context of the field of the '011 Patent namely "hemostasis valves for use during intravascular procedures." EX2008, ¶¶34-35; EX2007, 16:17-20.

6. Conclusion.

Accordingly, Petitioner has failed to demonstrate that the '011 Patent has redefined the term "filament." As such the term should be accorded its plain and ordinary meaning, "a thin, flexible length of material formed by one or more strands of material."

IV. CLAIMS 1-9 ARE NOT ANTICIPATED BY SCHAFFER (GROUND 1)

Schaffer discloses a hemostasis valve that employs a fundamentally different method of sealing from the current claims. Specifically, Schaffer employs actuating members that apply a compression force to a sealing module without conforming to the outer surface of the sealing module as compression is applied. Because Schaffer's actuating members do not conform to the outer surface of the sealing member 100, to effectuate a seal Schaffer includes an internal "highly compliant third central seal member 165 [that] seals around a variety of profile shapes 192 and diameters 194 of the lumen 193 when at least one side of compressive force 67 is exerted upon the central region 195 with respect to the central portion 110 of the containment structure 160." EX2003, ¶*60.*

In contrast, Claim 1 of the '011 Patent requires a "filament" and further requires that the filament is configured to "circumferentially constrict[] the lumen to create a seal"—neither of which is disclosed by Schaffer. Accordingly, Schaffer fails to anticipate Claim 1.

A. Schaffer Fails to Disclose a Filament that "Circumferentially Constricts"

Claim 1 requires, in part, that "the filament circumferentially constricts the lumen to create a seal." Schaffer fails to disclose that limitation and instead discloses actuating members that apply a compressive force in two opposing directions. Such a force does not constrict the lumen around its circumference. EX2008, ¶88-90. *See also*, EX2007, 133:11-21 ("Q. So does that mean the term "circumferentially" means completely around? A. That's what it means in this description for applying an adhesive to attach two components together. Q. That's what the word "circumferentially" means in that description; is that right? A. That's what I said.").

First, the Petition's unsupported conclusion that Schaffer discloses "circumferentially constricts" without any explanation or basis fails to meet Petitioner's burden to demonstrate anticipation by Schaffer. Specifically, the Petition repeats several limitations of Claim 1 including "circumferentially constricts" followed by the assertion that "Schaffer discloses these limitations or renders them obvious in view of Hartley or Eller." Petition, p.22. That's it.

The next mention of the limitation "circumferentially constricts" in the Petition recites that "[e]ven if the Board were to conclude that Schaffer's U-shaped actuating members do not 'circumferentially constrict[] the lumen [of Schaffer's valve] to create a seal' as claimed in the '011 patent, a POSITA would have found

it obvious to modify the U-shaped actuating members to closely conform to the seal module to circumferentially constrict the lumen." Petition, p.32 (citing EX1003, ¶75.) This unsupported conclusion that the limitation is met by Schaffer or that the limitation is obvious over Schaffer fails to carry Petitioner's burden to demonstrate anticipation by Schaffer.

Another reference to the limitation "circumferentially constricts" in the Petition appears with respect to Claim 9 and confirms that Schaffer does not disclose "circumferentially constrict." Just like for Claim 1, Petitioner alleges that "as explained for claim 1" Schaffer's "buttons pull the U-shaped actuating members to **constrict** the seal module 100." Petition, p.70 (emphasis added). Again, Petitioner does not allege that Schaffer "circumferentially constricts" as claimed. The Petition continues that "[i]f Schaffer's U-shaped actuating members were replaced with Hartley's string or Eller's wire member, Schaffer's actuator buttons would similarly pull the string/wire member, rather than the U-shaped actuating members, to **circumferentially constrict** the seal module 100." *Id*. (emphasis added). Petitioner makes no other allegation or argument for how the limitation "circumferentially constricts" is disclosed by or anticipated by Schaffer.

And, just like Petitioner, Petitioner's expert makes the identical statements, first simply alleging that the limitation is met without explanation (EX1003, ¶64), and then alleging that the limitation is obvious (*Id.* at ¶75 ("Even if the Board finds

that that Schaffer's U-shaped actuating members do not 'circumferentially constrict[] the lumen [of Schaffer's valve] to create a seal,' a person of ordinary skill in the art would have found it obvious to modify the U-shaped actuating members to circumferentially constrict the lumen.")).

And Petitioner's expert, just like in the Petition, confirms that Schaffer does not "circumferentially constrict" when discussing the limitation in Claim 9, alleging that Schaffer "constricts" as follows:

> As I explained previously for Claim 1, when Schaffer's actuator buttons are in the first, undepressed position, the springs coupled to Schaffer's actuator buttons impart forces on the actuator buttons causing the buttons to pull the U-shaped actuating members in opposite directions to **constrict** the seal module 100.

EX1003, ¶142 (emphasis added). Then, in the very next sentence, Petitioner's expert asserts that "when Schaffer's U-shaped actuating members are replaced with Hartley's string or Eller's wire member, Schaffer's actuator buttons would pull the string/wire member, rather than the U-shaped actuating members, to **circumferentially constrict** the seal module 100." EX1003, ¶142 (emphasis added). In other words, neither Petitioner nor its expert provide any basis for how Schaffer anticipates the limitation "circumferentially constricts." Ground 1 should be denied for that reason alone.

Moreover, Schaffer's non-conforming U-shaped actuating members cannot "circumferentially constrict" as claimed. As explained above, Schaffer fails to disclose that limitation and instead discloses nonconforming actuating members that apply a compressive force in two opposing directions. Such a force does not constrict the lumen around its circumference. EX2008, ¶¶88-90. Moreover, as shown in Figure 32, Schaffer's U-shaped actuating members are arranged completely parallel to one another (side-by-side). This parallel configuration means that the actuating members are positioned next to each other and do not cross any part of the same portion of the lumen. As such, even if taken together, Schaffer's U-shaped actuating members cannot circumferentially constrict as recited in Claim 1. *Id.* at ¶88.

B. Schaffer Fails to Disclose a "Filament"

Schaffer fails to disclose a "filament" under either party's proposed claim construction. First, Petitioner's claim construction requires that a "filament" is "one or more threads, lines, cords, ropes, ribbons, flat wires, sheets, or tapes." Petition, p.14. Even accepting that redefinition and admitted broadening from the term filament's plain and ordinary meaning, the Petition does not assert that Schaffer's U-shaped actuating members ***are*** any one of the recited "threads, lines, cords, ropes, ribbons, flat wires, sheets, or tapes" as expressly required by Petitioner's own claim construction. Instead, Petitioner alleges that Schaffer's U-shaped actuating members "***resemble***" a "ribbon, flat wire, sheet, or tape." *Id*. at p.27 (emphasis added). In fact,

the entirety of Petitioner's relevant assertion reads as follows: "Schaffer's actuating members are formed from aluminum or plastic, and resemble a ribbon, flat wire, sheet, or tape. (Ex. 1005, [0081], Figs. 31-34; Ex. 1003, ¶71.)" *Id*. So, even accepting Petitioner's assertion that Schaffer's U-shaped actuating members "***resemble***" a "ribbon, flat wire, sheet, or tape," Petitioner's proposed construction requires that the filament ***is*** one of a "ribbon, flat wire, sheet, or tape."

Anticipation requires that the limitation is disclosed, either expressly or inherently. *See SRI Int'l, Inc. v. Cisco Sys., Inc.*, 930 F.3d 1295, 1306 (Fed. Cir. 2019). "Resembling" a claimed structure is insufficient to anticipate the claim limitation because resemblance implies that the prior art structure does not expressly or inherently disclose the claimed limitation. *See*, *e.g.*, *In re Chudik*, 851 F.3d 1365, 1372 (Fed. Cir. 2017) ("a prior art reference that 'must be distorted from its obvious design' does not anticipate a patent claim."). Put another way, that Schaffer's U-shaped actuating members resemble a ribbon, flat wire, sheet, or tape simply means ***they are similar in some aspect*** but does not suffice that ***they are*** a ribbon, flat wire, sheet or tape.

More is required, and Petitioner's own expert explains—in the very paragraph cited by Petitioner—exactly what the "more" is. To support Petitioner's assertion that Schaffer discloses a "filament" as claimed, just like Petitioner, Petitioner's expert first asserts that "Schaffer's figures depict the actuating members as

resembling a ribbon, flat wire, sheet, or tape." EX1003, ¶71 (emphasis added). Then, Petitioner's expert further asserts that a POSA would have understood that the U-shaped actuating members "would have preferably been formed from a thin, flexible material" because, according to Petitioner's expert, "[s]uch a material would have permitted the actuating members to conform, as much as possible, to the outer surface of the seal module and tool inserted through the valve." *Id.* In other words, Petitioner's own expert recognizes that a "ribbon, flat wire, sheet, or tape" as recited in Petitioner's proposed claim construction requires more than just resembling any one of those structures, namely, it requires "a material [that] would have permitted the actuating members to conform, as much as possible, to the outer surface of the seal module and tool inserted through the valve." *Id*.

As explained herein, Schaffer's actuating members are expressly designed to be rigid and ***not*** to conform to the shape of the seal module as the actuating members apply compression. *See* §II.D.1. above. This is the very opposite of the claims of the '011 Patent. Petitioner and its expert particularly allege that Schaffer's U-shaped members resemble "a flat wire" (EX1003, ¶55 ("the U-shaped actuating members are at least "flat wires")) and that the U-shaped members can be machined from aluminum or plastic (Petition, p.27 ("The '011 patent states that the filament can be made from a polymer, which includes Schaffer's plastic, or a metal, which includes

Schaffer's aluminum.")). But Petitioner's expert confirms that neither are generally flexible:

> Q. And you said that plastic that would be machined would be rigid, correct?
> A. I think that's a fair statement.

EX2005, 168:2-6. And:

> Q. And -- and is it your understanding that aluminum wire can be made by machining aluminum?
> A. Typically it would not be.

EX2007, 152:8-10. Accordingly, Schaffer does not disclose a filament under Petitioner's proposed construction.

Second, Patent Owner's proposed construction expressly articulates why those forms of a "filament" conform, as much as possible, to the outer surface of the seal module and tool inserted through the valve. Specifically, a POSA would understand that in the context of the field of the '011 Patent each of "threads, lines, cords, ropes, ribbons, flat wires, sheets, or tapes" would be "a thin, flexible length of material formed by one or more strands of material." EX2008, ¶81. Just as expressly articulated in Patent Owner's proposed construction, Petitioner's expert explains that the "ribbon, flat wire, sheet, or tape" "would have preferably been formed from a thin, flexible material" because, according to Petitioner's expert,

"[s]uch a material would have permitted the actuating members to conform, as much as possible, to the outer surface of the seal module and tool inserted through the valve." EX1003, ¶71.

But, as explained above, Schaffer discloses non-conforming actuating members, which do not circumferentially constrict and which are fundamental to Schaffer's principle of operation. In Schaffer, the U-shaped actuating members are intended to not conform to the outer surface of the seal module as compression is applied. Instead, those members "forcibl[ly] disengage," *i.e.*, are disconnected, from the tubular member. Schaffer's design choice provides a more durable member with better control and ease of manufacture. EX2008, ¶¶159-69. Schaffer's design is thus able to take advantage of the benefits of nonconforming compression members and still provide a complete seal because "conforming to various shapes and sizes" in Schaffer occurs internal to the tube via an internal highly compliant sealing member 165 that conforms to and seals around various shapes and sizes. *Id*. at ¶¶132-36.

Indeed, Petitioner's expert admitted that, at best, "[t]he material properties of the U-shaped actuating members are not clearly defined in the Shafer [sic] application." EX2007, 115:16-18. Petitioner's expert continued: "They could be quite flexible. They could be more – somewhat more rigid, somewhat stiffer, somewhat more flexible. It's not clear. They don't provide material properties for the U-shaped actuating members." EX2007, 115:18-23.

But, in fact, Schaffer does disclose that the U-shaped actuating members "forcibly disengage opposing outer walls 27 of the seal module 100 allowing the portion 108 of the containment structure 160 to retract to an uncollapsed configuration" EX1005, ¶[0077]. To "forciblly disengage opposing outer walls 27 of the seal module 100" requires rigid U-shaped actuating members that do not conform to the "outer walls 27" as compression is applied. EX2008, ¶¶94-95. In contrast, if the actuating members 55 were flexible, they would remain in contact with and never disengage the seal module 100 as the seal module expands, contrary to Schaffer's teachings. *Id.*

Petitioner's expert's testimony in a related IPR that "the term 'forcibly disengage' refers to the act of applying force to the buttons to release tension created by the actuating members" (IPR2025-00289 Petition, pp.41-43 (citing EX1003, ¶111)) is contradicted by Schaffer's plain disclosure that "[s]uch movement allows each engaged actuating member 55 to forcibly disengage opposing outer walls 27 of the seal module 100." EX1005, ¶[0077]. Schaffer is clear. It is the U-shaped "actuating members 55" that disengage opposing outer walls of the seal module. And, Schaffer's "forcible disengagement" cannot occur if the U-shaped actuating members are not rigid, just like all the other actuating members throughout Schaffer's disclosure. EX2008, ¶95.

Schaffer further discloses that the U-shaped actuating members are manufactured by machining or injection molding. A POSA would understand that both methods of manufacture are generally intended for rigid parts. EX2008, ¶97. *See also*, EX2005,168:2-6 (Q. And you said that plastic that would be machined would be rigid, correct? A. I think that's a fair statement."); EX2007, 152:8-10 (Q. And -- and is it your understanding that aluminum wire can be made by machining aluminum? A. Typically it would not be."). In short, Petitioner provides no basis for its assertion that Schaffer's U-shaped actuating members are "thin and flexible." They are not.

Accordingly, Schaffer fails to disclose a "filament" as claimed under either party's proposed claim construction.

V. CLAIMS 1-9 ARE NOT OBVIOUS OVER SCHAFFER ALONE (GROUND 2), IN VIEW OF HARTLEY (GROUND 3), OR IN VIEW OF ELLER (GROUND 4)

A POSA would not have been motivated to replace Schaffer's U-shaped actuating members with a filament or Hartley's string or Eller's wire member. Petitioner's proposed modification and combinations are hindsight—requiring a POSA to first manufacture a non-existent problem with Schaffer (poor sealing), then modify Schaffer to remedy that non-existent problem in a manner that fundamentally changes Schaffer's principle of operation.

A. Petitioner's Stated Motivation to Modify Schaffer or Combine Schaffer with Hartley or Eller Is Contradicted by Schaffer and the Statements of Petitioner and Its Expert

First, Petitioner's asserted motivation to modify Schaffer alone or substitute Hartley's string or Eller's wire member for Schaffer's U-shaped actuating members is manufactured from whole cloth. Based on its expert's statements, Petitioner claims that a POSA would have recognized that a flexible member or that Hartley's string or Eller's wire "may seal more effectively" across a wider range of tool/device diameters and shapes than Schaffer's U-shaped actuating members and that "[d]epending on the diameter of the inserted device, Schaffer's U-shaped actuating members may form small gaps between the valve's lumen and the outer surface of the device." Petition, pp.35-36. But Petitioner and its expert repeatedly admit that Schaffer's valve forms a complete seal—even when various instruments are inserted therethrough. EX2008, ¶¶154-58. Accepting that is true, as it is, then this should be dispositive: there can be no motivation to solve a non-existent problem.

Indeed, Petitioner's expert admitted at deposition that if Schaffer forms a complete seal, there would be no need to modify Schaffer's U-shaped actuating members, as follows:

> Q. So if Shafer's U-shaped members formed a complete seal around multiple tools, there would be no reason to include Ellers' wire member or Hartley's string in Shafer; isn't that correct?
> ***

> THE WITNESS: If it worked perfectly for all the range of tools, then there probably wouldn't be a need to make adjustments and move to a string-type member.

EX2007, 116:18-117:2.

Here, to assert that Schaffer anticipates Claim 5, Petitioner and its expert allege that Schaffer forms a complete seal even when there is a pressure differential across Schaffer's valve. Petition, pp.56-57 ("Schaffer discloses a 'durable stasis valve that blocks the flow of gas or fluid completely and immediately with or without an instrument in place within the gas/fluid path.' (Ex. 1005, [0008].)"). *See also* EX1003, ¶¶119-121. Petitioner and its expert further allege that "when Schaffer's actuator buttons are in the first, undepressed position, the central lumen of the tubular member remains constricted and sealed, even when a pressure differential existed between the first and second ends of the tubular member." Petition, p.58 (citing EX1003, ¶120).

Similarly, in related IPRs, Petitioner and its expert rely on complete sealing of Schaffer's valve as a purported motivation to use Schaffer's valve in another reference, Garrison:

> Schaffer discloses that its hemostasis valve is "for use with catheters" and "blocks the flow of gas or fluid completely and immediately with or without an instrument in place within the gas/fluid path." (Ex.1005, [0002], [0008], [0047], [0049].) Schaffer further discloses that a range

> of instruments can be used within the valve, such as "a catheter, guidewire, needle, or fiber." … Thus, Schaffer's valve performs the stated function of Garrison's "hemostasis valve"—to "allow introduction of devices…while preventing or minimizing blood loss during the procedure." (Ex.1011, [0098].) For this added reason, a POSA would have been motivated to combine, and reasonably expected success in combining, Schaffer's valve with Garrison.

See, *e.g.*, IPR2025-00289 Petition, p.36. Accordingly, Petitioner and its expert acknowledge that Schaffer discloses that its valve seals completely with or without an instrument inserted therethrough and then explain that a POSA would have expected that Schaffer's valve could be used in Garrison to prevent blood loss through the valve. EX2008, ¶¶154-56.

Petitioner's expert further states in support of that IPR petition:

> Schaffer further explains that "a range of instruments [can be] used within the seal module," such as "a catheter, guidewire, needle, or fiber," … Given these disclosures in Schaffer, a person of ordinary skill in the art would have reasonably expected that Schaffer's valve would allow the tools in Garrison's system, such as the catheter 2030 or a smaller catheter through catheter 2030, to pass through the valve into the patient's vasculature while also preventing blood from leaking around those tools.

IPR2025-00289 EX1003, ¶101. Accordingly, Petitioner's expert states that a POSA would have understood Schaffer's valve to prevent leaks around a catheter (such as

Garrison's catheter) inserted through the valve as the basis for the combination with Garrison. EX2008, ¶156.

Yet, at the same time, Petitioner and Mr. Thornton manufacture a purported motivation to modify Schaffer asserting that a POSA would understand that Schaffer's valve would form gaps and would not seal completely. Petition, pp.35-36, 44-45; EX1003, ¶¶81, 94. But if a POSA would have reasonably expected Schaffer's valve to prevent leaks and blood loss around an instrument inserted through the valve as admitted by Petitioner and Mr. Thornton, a POSA would not have understood that small gaps (leak paths) would form in Schaffer's valve as Petitioner alleges as its motivation to modify or substitute Hartley's string or Eller's wire member for Schaffer's U-shaped actuating members. EX2008, ¶¶154-58. That is, if Schaffer's valve forms a complete seal with or without instruments inserted therethrough, a POSA would not have been motivated to modify Schaffer for the reasons Petitioner claims. *Id.*

Indeed, Schaffer's valve does form a complete seal with or without instruments inserted therethrough. Specifically, Schaffer discloses that its rigid U-shaped members 55 do not result in gaps due to the inclusion of sealing member 165. EX1005, ¶[0059]; EX2008, ¶¶129-153. Schaffer discloses that its valve creates a "nearly fluid/gas tight seal under very light compression," a functionality achieved using materials that, for example, "can be compared to a gelatinous substance."

EX1005, ¶[0059]. Schaffer discloses that this compliant material ensures a complete seal, even in the presence of rigid components, as it is designed to "be easily compressed upon itself or upon an inserted instrument," due to its sticky nature and "self[-]closing" properties. *Id*. Indeed, the "seal member 165 is so compliant that it forms a seal around [multiple] instruments 260 even if the instruments 260 are irregularly shaped." *Id*. at ¶[0068].

The absence of gaps due to Schaffer's seal member 165 is further shown in Schaffer's Figures 16-19:

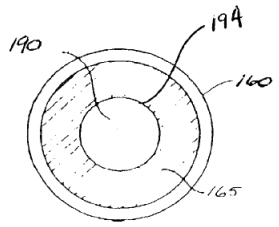

FIG. 16

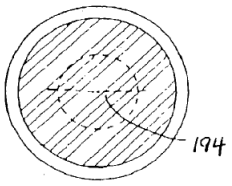

FIG. 17

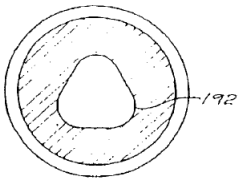

FIG. 18

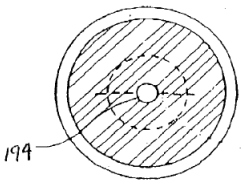

FIG. 19

EX2008, ¶134-36 (citing EX1005, ¶[0060]). No gaps are formed when the seal module: (i) seals around a large circular lumen 194 (Figure 16), (ii) is completely closed (Figure 17; e.g., without an instrument inserted through the lumen

194), (iii) seals around an irregularly shaped lumen (Figure 18), or (iv) seals around a small circular lumen 194 (Figure 19). EX2008, ¶136.

In a related IPR, Petitioner's own expert recognizes Schaffer's disclosure of a sealing member that "exhibits a 'selfclosing' nature in that it sticks occlusively to itself forming a nearly fluid/gas tight seal" (EX1005, ¶[0059]). *See* IPR2025-00289 EX1003, ¶124. Despite that express disclosure and to manufacture the purported defect in Schaffer necessary for motivation to modify Schaffer, Petitioner's expert testified there that a POSA would either choose materials for the sealing member that would not seal or would omit the sealing member altogether. *Id*. According to Petitioner's expert, only after a POSA redesigned Schaffer's sealing member so that it does not seal, would a POSA then need to redesign Schaffer's rigid U-shaped actuating members to remedy Schaffer's purported sealing problem. *Id*.

Petitioner's proposed combination would actually seal less effectively around multiple instruments inserted through Schaffer's valve and/or when an instrument is irregularly shaped—scenarios for which Schaffer's valve is designed to form a seal as explained above. For example, if two circular instruments were inserted side-by-side through Schaffer's seal module, Hartley's string or Eller's wire member in Petitioner's combination (which removes the special sealing properties of Schaffer's seal module in order to manufacture a motivation to substitute Hartley or Eller)

might be unable to seal the space (e.g., gaps/divots) between the instruments as shown below:

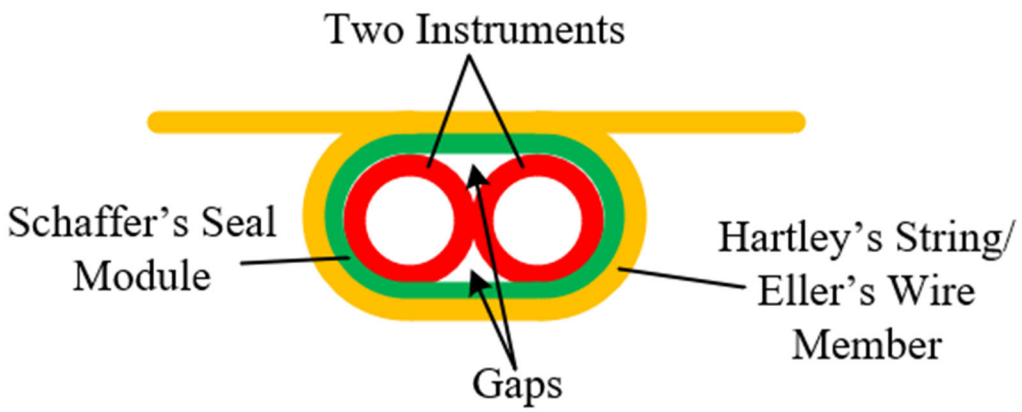

EX2008, ¶136. Schaffer's internal sealing member is designed to seal when multiple instruments are inserted through the valve. EX1005, ¶[0068].

Thus, a POSA would not have been motivated to substitute Hartley's string or Eller's wire member for Schaffer's U-shaped members to prevent Petitioner's purported gaps because Schaffer makes clear that its seal module and actuating members form a complete (i.e., gapless) seal. EX2008, ¶¶129-53. Accordingly, Petitioner fails to provide any motivation to modify Schaffer as claimed. To the contrary, a POSA would not be so motivated.

B. Petitioner's Proposed Modifications Would Change Schaffer's Principles of Operation

There is no motivation to modify a reference or combine prior art references where modification/combination would alter the principle of operation or would render the prior art inoperable for its intended purpose. *See Adidas AG v. Nike, Inc.*,

963 F.3d 1355, 1358-59 (Fed. Cir. 2020) (affirming lack of motivation to combine references where the proposed modification would "require the alteration of the principle of operation of [the primary reference] or would render [the primary reference] inoperable for its intended purpose."); *Plas-Pak Indus. V. Sulzer MixPak* AG, 600 Fed.App'x. 755, 758 (Fed. Cir. 2015) (rejecting obviousness findings where the necessary alterations to a first reference would fundamentally change its "principle of operation").

Here, Schaffer employs nonconforming rigid U-shaped members to apply compression to an internal sealing member that then forms a seal. A POSA would understand that Schaffer's rigid U-shaped actuating members are necessary to "forcibly disengage" when unsealing, necessary for Schaffer's disclosed method of manufacture, and necessary to provide Schaffer's various benefits including reliability and durability. EX1005, ¶¶[0080]-[0082]. As such, a POSA would not have been motivated to modify Schaffer alone or based on Eller's wire or Hartley's string as Petitioner suggests, because doing so fundamentally and negatively changes how Schaffer seals by removing the internal seal member and then redesigning Schaffer's rigid actuating members to remove their accompanying benefits.

1. Substituting Hartley's string or Eller's wire member for Schaffer's actuating members would prevent forcible disengagement.

Contrary to Petitioner's assertions, a POSA would not replace Schaffer's rigid U-shaped actuating members with a filament or Hartley's string or Eller's wire member because such a modification would prevent forcible disengagement. EX2008, ¶¶170-72. Schaffer discloses that when the actuator buttons 261 are depressed to open its valve, the U-shaped members 55 "forcibly disengage," allowing fluid flow. EX1005, ¶[0080]. Schaffer describes these mechanics by explaining that "[s]uch movement allows each engaged actuating member 55 to forcibly disengage opposing outer walls 27 of the seal module 100 allowing the portion 108 of the containment structure 160 to retract to an uncollapsed configuration where gases and fluids can pass therethrough." *Id*. at ¶[0077].

In Petitioner's proffered modifications and combinations that substitute Hartley's string/Eller's wire member for Schaffer's U-shaped actuating members, Hartley's string or Eller's wire member loops around Schafer's seal module. Petition, pp. 37-38, 45-46. Petitioner further explains that the seal module would expand against Hartley's string or Eller's wire member to open when tension is released on the string or wire member. *Id*. at pp.39-40, 48-49. In this arrangement, Hartley's string or Eller's wire member would never disengage—let alone forcibly disengage—Schaffer's seal module. EX2008, ¶171. Therefore, this modification

would change the principle of operation of Schaffer. *Id.* Additionally, as conceded by Mr. Thornton in a related IPR (IPR2025-00289 EX1003, ¶124), the seal module could stick to and retain Hartley's string or Eller's wire member in the closed position—rendering Schaffer's valve inoperable by inhibiting movement of the seal module from the collapsed closed position to the uncollapsed open position. EX2008, ¶172.

2. Substituting Hartley's string or Eller's wire member for Schaffer's actuating members would compromise the ease of manufacturing and durability of Schaffer's valve.

Modifying or substituting Hartley's string or Eller's wire member for Schaffer's U-shaped actuating members would introduce assembly difficulties and undermine the durability of Schaffer's valve. EX2008, ¶159-69. Schaffer's rigid U-shaped actuating members 55 are purposefully designed to be rigid and attached to only a single actuator. *Id.* at ¶159. That design choice provides simple methods of assembly and manufacturing, and effectively addresses Schaffer's recognized need for "a durable stasis valve that blocks the flow of gas or fluid completely and immediately with or without an instrument in place within the gas/fluid path." EX1005, ¶[0008].

First, Schaffer discloses a method of manufacture of its valve that relies upon its U-shaped actuating members being rigid and attached to only a single actuator. EX2008, ¶161. Specifically, Schaffer discloses that its U-shaped members are

advantageously machined, and that the valve is assembled by inserting the seal module "through the housing 20 and between each actuator 50" after those portions of the valve are already assembled, as follows:

> The actuator button 261 and resilient member 267 (e.g., spring 210) are inserted into an opposing side of the housing 20. Each actuator button 261 is completely compressed and held while the seal module 100 is inserted through the housing 20 and between each actuator 50.

EX1005, ¶[0083].

The components used in this assembly are shown in annotated Figure 34 below, showing that in the depressed position, the rigid U-shaped actuating members are forcibly pushed open (similar to forcible disengagement) to provide a gap through which the seal module can be inserted during assembly:

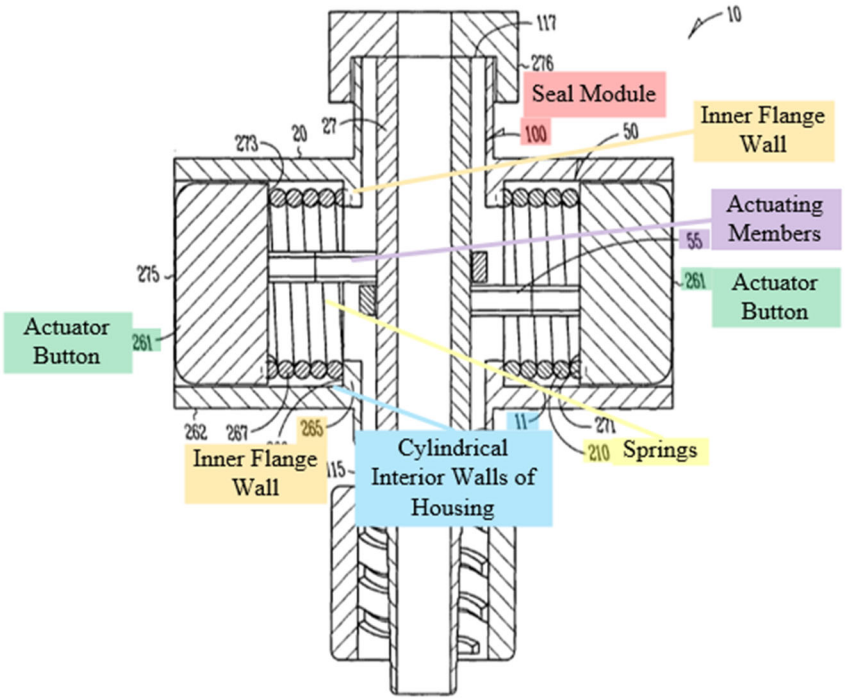

Fig. 34

EX2008, ¶161.

A POSA would understand that Hartley's string or Eller's wire member substituted for Schaffer's U-shaped member would not only complicate this manufacturing process but also introduce practical challenges that could render the assembly inefficient and unreliable compared to Schaffer's straightforward design employing rigid actuating members attached to a single actuator. *Id*. at ¶¶162-168. In Petitioner's proposed combination of Schaffer with Hartley or Eller (not taught by any) the first end of Hartley's string or Eller's wire member would be secured to Schaffer's first actuator button, Hartley's string or Eller's wire member would loop around Schaffer's seal module, and the second end of Hartley's string or Eller's wire

member would be secured to Schaffer's second actuator button. Petition, pp. 52-60. Thus, in Petitioner's combination a single string or wire member must be tethered to both of Schaffer's actuator buttons.

But, to achieve this arrangement, the string or wire member would need to be either (1) secured to the actuator buttons 261 before the actuator buttons 261 are inserted into the openings in the housing 20 or (2) secured to the actuator buttons 261 after the actuator buttons 261 are inserted into the openings. EX2008, ¶162. However, the first method of assembly would not be possible because the tethered actuator buttons 261 could not be inserted through the respective openings on either side of the housing 20 while also positioning Hartley's string as alleged by Petitioner. *Id.* at ¶163. Likewise, a POSA would understand the second method of assembly to be unduly difficult because the housing 20 and the actuator buttons 261 would block access to the interior of the housing 20 and inhibit or even prevent the positioning of Hartley's string or Eller's wire member in Petitioner's combination. *Id.* at ¶164.

Even if the first or second method of assembly were somehow workable, Schaffer teaches that "[e]ach actuator button 261 is completely compressed and held while the seal module 100 is inserted through the housing 20 and between each actuator 50." EX1005, ¶[0083]. Hartley's flexible string or Eller's flexible wire member would be loosened when the actuator buttons 261 are compressed in

Petitioner's proposed combination such that neither would provide a uniform opening like Schaffer's rigid U-shaped actuating members to easily permit positioning of the seal module therethrough. EX2008, ¶165.

Therefore, a POSA would recognize that the substitution of Hartley's string or Eller's wire member for Schaffer's U-shaped actuating members is contrary to Schaffer's disclosed method of assembly. Petitioner's assertion of a reasonable expectation of success for its proposed modifications does not address Schaffer's express method of assembly relying upon rigid actuating members attached to separate actuator buttons or that a POSA would have a reasonable expectation of success assembling a valve with the proposed modification.

Regarding manufacturing, Schaffer discloses that its U-shaped members can be advantageously quickly and efficiently manufactured by means of machining (controlled removal of material to form the desired shape) plastic or metal or by injection molding the same rigid materials as follows. EX1005, ¶[0082]; EX2008, ¶168. Schaffer's standard machining methods to manufacture its rigid U-shaped members would not work well with filaments. EX2008, ¶168. Hartley's string or Eller's wire member would deform when subjected to force during the machining process, which makes it exceedingly challenging—if not unfeasible—to achieve the precise dimensions and structural integrity required for effective valve operation. *Id.*

A POSA would recognize that Hartley's string or Eller's wire member are ill-suited for Schaffer's straightforward manufacturing and assembly techniques. *Id.*

Regarding durability, Schaffer's construction enables the valve to endure operational demands and maintain its performance and structural integrity over time. EX2008, ¶169. For example, the rigidity of the U-shaped members imparts the necessary strength and stability to prevent deformation or failure when the actuating members are actuated. *Id.* The introduction of Hartley's string or Eller's wire member could weaken the valve's durability given the flexible nature of these components, ultimately undermining its intended function of providing a dependable and long-lasting seal mechanism. *Id.*

For these reasons, a POSA would neither find it obvious nor be motivated to substitute Hartley's string or Eller's wire member for Schaffer's U-shaped actuating members, as doing so would change Schaffer's principle of operation and assembly method, and reduce durability.

C. Even Assuming Petitioner's Stated Motivations to Form a Better Seal and Avoid the Formation of Gaps, Petitioner Does Not Explain Why a POSA Would not Use Any of the Alternatives to Substituting that It Admits Would Work to Improve Schaffer's Seal.

Even assuming that a POSA would understand Schaffer's valve to form gaps (it would not), a POSA would not have been motivated to substitute Hartley's string or Eller's wire member for Schaffer's U-shaped actuating members rather than make

simple modifications to Schaffer's valve that Petitioner admits would address any sealing issues. EX2008, ¶173. For example, when addressing Schaffer's alleged disclosure of Claims 5 and 6, Petitioner asserts that a POSA would have recognized multiple straightforward ways to enhance or maintain Schaffer's seal with a reasonable expectation of success:

> [T]the extent Schaffer's valve did not maintain its seal when a pressure differential exists, a POSITA would have found it obvious to make one or more of several adjustments, including adjusting Schaffer's spring strength to apply additional force to seal the valve, adjusting the resilience and compressibility of the seal module that forms the valve's lumen … POSITAs would have been motivated to do so because the purpose of Schaffer's hemostasis valve is to prevent leakage when a catheter or medical device is inserted into a patient. (Ex. 1003, ¶122.)

Petition, pp.58-59.

> POSITAs would have reasonably expected success in adjusting the spring strength to exert more tension on the filament by, for example, changing the spring material or adjusting the springs coils. (*Id.*) Springs are simple, predictable mechanical devices that would have been well understood by POSITAs. (*Id.*) As explained above, POSITAs would have reasonably expected success in selecting an appropriate lumen material in view of the range of suitable materials disclosed in the prior art.

Id. at p.59.

Accordingly, a POSA would have understood that simple properties of Schaffer's existing valve such as spring force or properties of the seal module could be adjusted to improve Schaffer's seal. Petition, pp.58-59; EX2008, ¶174 A POSA would have also understood that such adjustments employ Schaffer's stated principles of operation including two nonconforming actuating members each attached to a single actuator button in conjunction with an internal sealing member to conform to various shapes and sizes, and simple manufacturability, durability, and forcible disengagement. EX2008, ¶174.

Petitioner provides no reason why a POSA would contradict these principles of operation by modifying or substituting Hartley's string or Eller's wire member for Schaffer's U-shaped members. Indeed, substituting Hartley's string or Eller's wire member for Schaffer's U-shaped members would render Schaffer's valve inoperable for its intended purposes as explained above in §V.B. *Id.* at ¶175. A POSA would instead make any of the simple modifications Petitioner asserts would work as viable alternatives to complete Schaffer's seal if even necessary to prevent blood leaks and that would not require a complete redesign of Schaffer's valve that departs from its principles of operation. *Id.*

D. Petitioner's Proposed Modification or Substitution of Hartley's String or Eller's Wire Member for Schaffer's Actuating Members Is Not a Simple Substitution

Further, contrary to Petitioner's assertion, replacing Schaffer's rigid U-shaped actuating members with a flexible string or wire as disclosed in Hartley or Eller is not a simple "substitution of one known element (Hartley's string [or Eller's wire]) for another (Schaffer's actuating members)." Petition, pp.35, 44. Petitioner's proposed combination requires one end of Hartley's string or Eller's wire member to be attached to one of Schaffer's actuator buttons and the other end to be attached to the other of Schaffer's actuator buttons such that both of Schaffer's actuator buttons control movement of the string or wire member. *Id*. at pp.37-38, 45-46. But neither Schaffer, Hartley, nor Eller disclose such an arrangement.

Indeed, each of Schaffer's U-shaped actuating members 55 are attached to one of the actuator buttons 261 such that movement of each of the actuator buttons controls movement of only one of the actuating members:

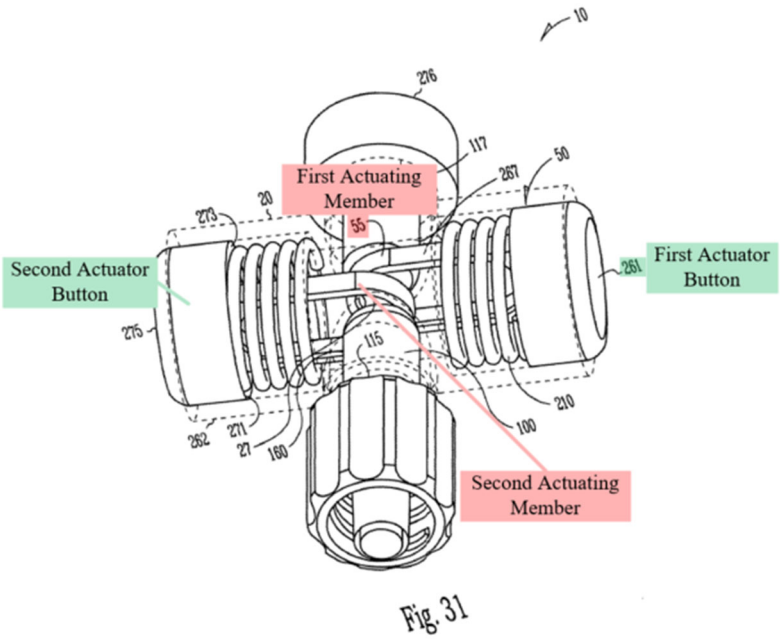

EX2008, ¶117-18.

Hartley discloses an access valve having a string 14 extending around a cylindrical elastomeric diaphragm 8 and attached by knots 16 and 18 to a single rotary actuator 12:

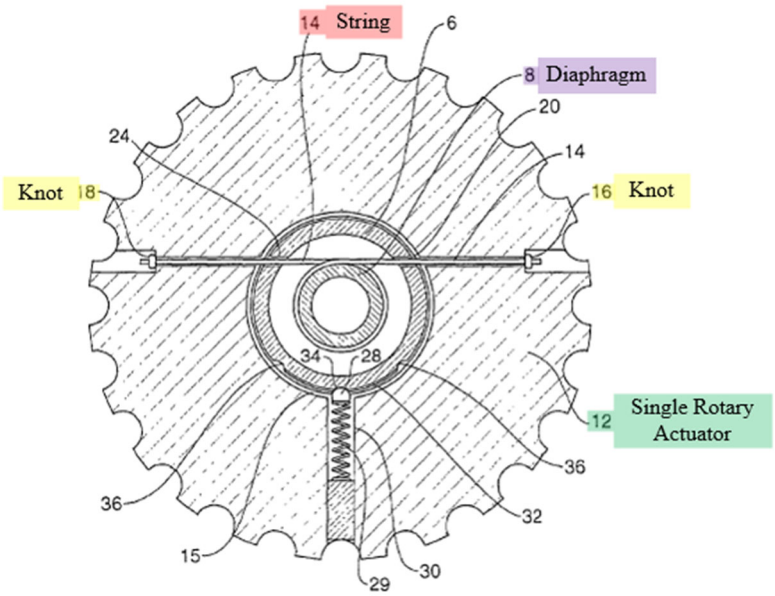

Fig 3

EX1006, ¶[0031]; EX2008, ¶119. The rotary actuator 12 is a single integral piece such that the knots 16 and 18 are attached to the same rotary actuator 12, and that single rotary actuator controls movement of the string 14. EX2008, ¶119.

Similarly, Eller discloses a selective fluid barrier device 810 including a housing 816, an actuator 818, a sleeve 820, and a wire member 822 having "a first end 924 attached to the housing 816 … and a second end 926 attached to the actuator 818":

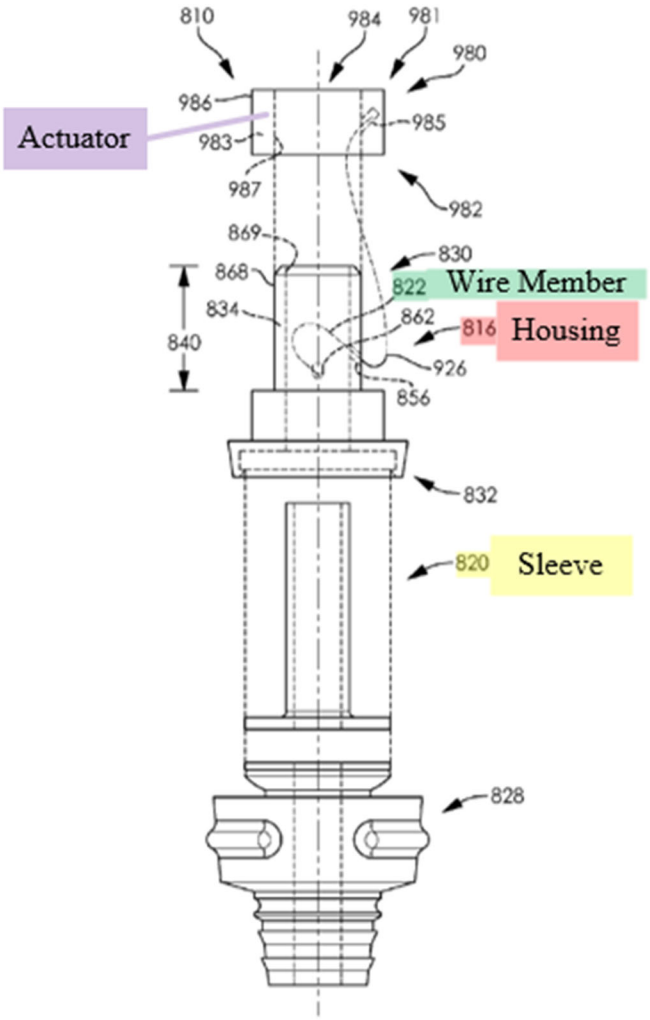

FIG. 20

EX1007, 23:50-62, 24:50-52. Eller discloses other embodiments with multiple wire members each having a first end attached to a housing and a second end attached to a single actuator. EX2008, ¶¶121-22. In each of these embodiments, the wire members have a first end coupled to a housing and a second end coupled to an actuator. *Id.* Movement (e.g., rotation) of the actuator pulls only the second end of the wire member while the first end remains stationary. *Id.* Accordingly, movement of the single actuator controls movement of the wire member.

Accordingly: (i) Schaffer's U-shaped actuating members are each attached to and controlled by a single one of the actuator buttons, (ii) Hartley's string has both ends attached to and controlled by the same rotary actuator, and (iii) Eller's wire member has one end attached to the housing and the other to the actuator such that the single string controls movement of the actuator. *Id.* at ¶¶117-24. Therefore, Petitioner's arrangement including a string/wire member having both ends attached to two separate actuators is not disclosed by any of Petitioner's references and was not a "known element."

Under Petitioner's proposed combination, a POSA would need to not only eliminate Schaffer's rigid U-Shaped actuating members and replace them with a single flexible wire/string, but would also have to modify Schaffer to connect that single wire/string to two different opposed actuators—a configuration not found in any of Schaffer, Hartley, or Eller. EX2008, ¶¶125-28. Petitioner does not explain why this additional modification of the references would be obvious, despite it not being taught in any of those references. *See Virtek Vision Int'l v. Assembly Guidance Sys.*, 97 F.4th, 882, 887 (Fed. Cir. 2024) (reversing PTAB finding of obviousness because the "mere fact that these possible arrangements existed in the prior art does not provide a reason that a skilled artisan would have substituted" one for the other.). Here, Petitioner has failed to show that the claimed arrangement existed in the prior art, let alone provide a reason to modify the references to include that arrangement.

Such a substitution is also not "simple" because a POSA would understand that controlling a string or wire with two independently movable actuators—rather than one actuator as taught by Schaffer, Hartley, and Eller—would increase the complexity and variability of Schaffer's valve and make the valve more difficult to manufacture. *Id.* at ¶128. Petitioner's proposed combinations of Schaffer and Hartley or Eller therefore depart from the intended purpose and express disclosure of these references in which a single U-shaped actuating member, string, or wire member, respectively, are controlled by a single actuator. *Id.* at ¶¶127-28.

In sum, neither Schaffer, Hartley, nor Eller disclose any element (U-shaped actuating member, string, or wire member) attached to separate, individually-controlled actuator buttons as in Petitioner's proposed combination. *Id*. Grounds 2 and 3 fail for that reason alone.

VI. CLAIMS 1-3, 5-6, 9 ARE NOT OBVIOUS OVER HARTLEY IN VIEW OF ELLER (GROUND 5)

Petitioner's proposed combination of Hartley and Eller fails to disclose or render obvious the limitations of Claim 1, from which all other claims depend. Specifically, neither Hartley nor Eller disclose that the "actuator comprises a first member coupled to the first end of the filament and a second member coupled to the second end of the filament," as expressly recited in Claim 1. Instead, each of Hartley and Eller discloses a single rotary actuator, not an actuator with a "first member"

and a "second member." EX2008, ¶¶178-83. Moreover, a POSA would not be motivated to modify Hartley in view of Eller as Petitioner proposes because doing so would be contrary to the purpose of Hartley. *Id.* at ¶¶184-87.

A. The Combination of Hartley and Eller Fails to Disclose an "Actuator [that] Comprises a First Member coupled to the First End of the Filament and a Second Member Coupled to the Second End of the Filament"

As explained in §V.D. above, Hartley and Eller fail to disclose the filament of Claim 1 having a "first end" and a "second end" and the "actuator compris[ing] a first member coupled to the first end of the filament and a second member coupled to the second end of the filament." Instead, both Hartley and Eller disclose a single actuator: (i) Hartley discloses a single string 14 having both ends coupled to the single rotary actuator 12 and (ii) Eller discloses a wire member having a first end attached to the actuator and a second end attached to the housing. EX2008, ¶¶181-82.

Indeed, in the Institution decision, the Board agreed with Patent Owner, stating "[w]e agree with Patent Owner that Petitioner has not established that the modification of Hartley in view of Eller includes an actuator with a 'first member' and a 'second member' as claimed … [t]he alleged 'first member' and 'second member' cited by Petitioner … are simply portions of a single, unitary rotary

actuator in Hartley." Paper 7 at p.42 (P.T.A.B. Jan. 23, 2025). Petitioner's arguments here fail for that reason alone.

B. A POSA Would Not Have Been Motivated to Modify Hartley in View of Eller Because the Proposed Modification Would Change Hartley's Principle of Operation And Render Its Detent System Inoperable for Its Intended Purpose

A POSA would not have been motivated to modify Hartley to include a spring as disclosed in Eller, because that modification would eliminate the object of Hartley's invention. EX2008, ¶¶184-87. Specifically, the sole object of the invention in Hartley is to "provide an access valve which can be controlled to vary the size of the aperture through the valve and be flexible so that a seal may be formed against an instrument … inserted through the access valve." EX1006, ¶[0004]. Hartley achieves that objective through a "detent arrangement" that includes a ball 28 biased by a spring 29 (both positioned in an aperture 30 in the rotary actuator 12) to engage a central recess 34 and end recesses 36 of the housing 6:

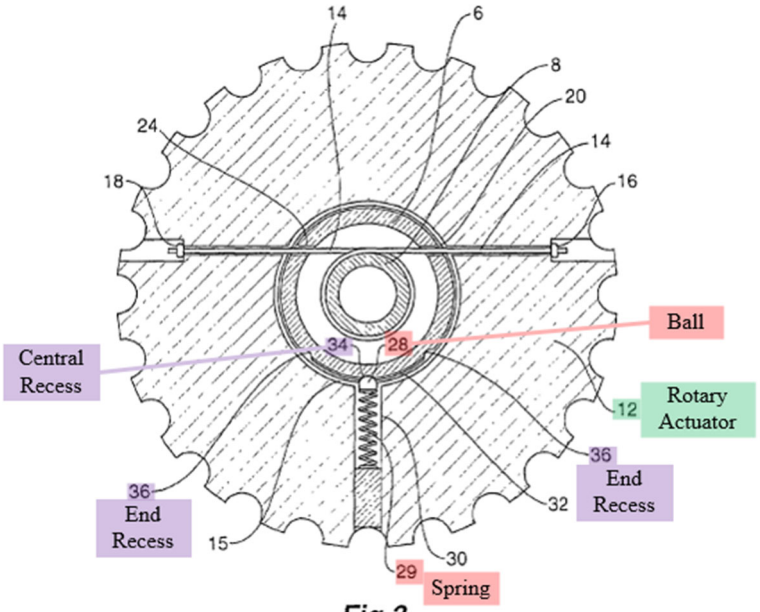

Fig 3

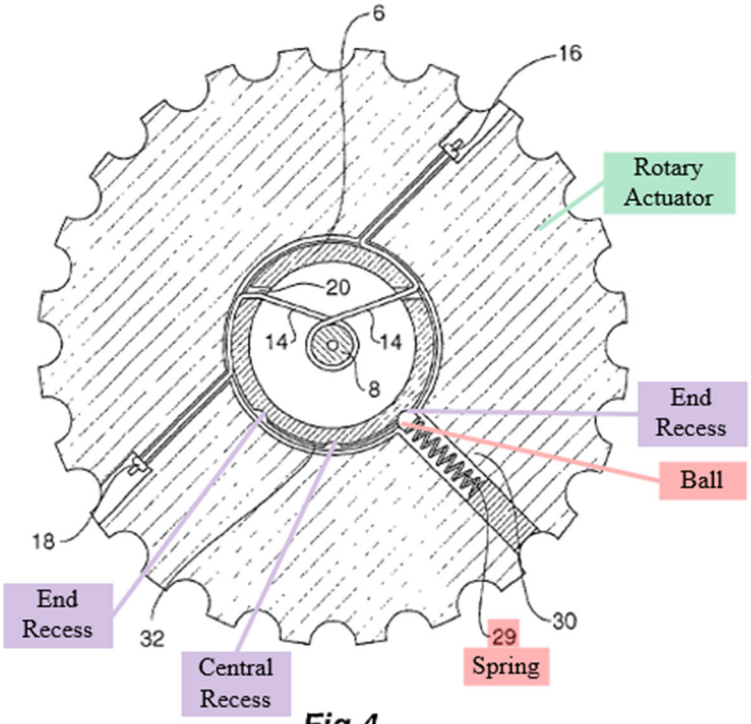

Fig 4

Id. at [0033]; EX2008, ¶185.

The ball and detent system ***retains*** the rotary actuator on the cylindrical housing in a selected position (EX1006, ¶¶[0015], [0018]) and provides tactical feedback as the rotary actuator is rotated (*id*. at ¶¶[0018], [0033]). EX2008, ¶¶185-86. Accordingly, the three detents provide three different locking positions that correspond to three different opening sizes for the lumen, although Hartley further discloses that additional detents may be provided to allow for additional locked/retained lumen sizes. EX1006, ¶[0033]; EX2008, ¶¶185-86.

A POSA would understand that modifying Hartley to include Eller's spring "to bias the actuator [of Hartley] toward the closed position" as proposed by Petitioner (Petition, p.79) would render Hartley's ball and detent system inoperable. EX2008, ¶187. To bias to the closed position, Eller's torsion spring would override the ball and detent system and eliminate Hartley's ability to selectively maintain various opening sizes for the lumen—acting to always seal the valve. *Id*. Specifically, for example, Hartley's valve could not be maintained in the open position shown in Figure 3 above in which the ball 28 engages the central recess 34 to maintain the valve in an open position. *Id*.

Further, the pressure exerted by the torsion spring could create significant resistance against any instruments being advanced through Hartley's valve, especially in cases where softer instruments are used. *Id*. at ¶¶190-94. Accordingly, a POSA would understand that Hartley's detent system, which allows for various

lumen sizes to be maintained and instruments to be easily advanced, is necessary to Hartley's principle of operation and that modifying Hartley to include a spring would render that feature inoperable. *Id*. Petitioner fails to address Hartley's detent system and does not assert that a POSA would remove or change that system, let alone provide motivation for such a modification.

Accordingly, a POSA would not have been motivated to modify Hartley in view of Eller because Petitioner's proposed modification would change the principle of operation of Hartley's detent system and eliminate the objective of Hartley's invention.

VII. DEPENDENT CLAIM 3 IS NOT ANTICIPATED BY SCHAFFER (GROUND 1) OR RENDERED OBVIOUS BY SCHAFFER, HARTLEY, OR ELLER (GROUNDS 2-5)

Claim 3 depends from independent Claim 1 and thus includes all the limitations from Claim 1. Accordingly, Claim 3 is not anticipated by Schaffer (Ground 1) or rendered obvious by the combination of Schaffer, Hartley, and Eller (Grounds 2-5).

Claim 3 is also not anticipated by or rendered obvious by Schaffer (Grounds 1 or 2) for additional reasons separate from Claim 1. In particular, Claim 3 recites "wherein the first portion of the filament extends in a loop completely around the tubular member." Schaffer fails to disclose this feature because the U-shaped actuating members are configured in parallel (e.g., side-by-side). EX2008, ¶196.

This parallel configuration means that the actuating members are positioned next to each other and do not form a loop. *Id*. As such, even if taken together, Schaffer's U-shaped actuating members cannot "extend[] in a loop completely around the tubular member." Claim 3 is patentable over Schaffer for at least this additional reason.

VIII. CONCLUSION

For the reasons set forth herein, Petitioner has failed to demonstrate that any of claims 1-9 are unpatentable over Grounds 1-5.

Respectfully submitted,

Dated: April 18, 2025

By: */ Joseph P. Hamilton /*
Joseph Hamilton
Reg. No. 51,770
Lead Counsel for Patent Owner

CERTIFICATE OF COMPLIANCE

Pursuant to 37 C.F.R. § 42.24(d), I, Joseph Hamilton, certify that **PATENT OWNER'S PRELIMINARY RESPONSE** contains 13,416 words, excluding those portions identified in 37 C.F.R. § 42.24(a), as measured by the word-processing system used to prepare this paper.

Dated: April 18, 2025

By: / *Joseph P. Hamilton* /
Joseph Hamilton
Reg. No. 51,770

CERTIFICATE OF SERVICE

Pursuant to 37 C.F.R. § 42.6(e), I certify that on April 18, 2025, a copy of **PATENT OWNER'S PRELIMINARY RESPONSE, and EXHIBITS 2006-2009** was served upon the below-listed counsel by electronic mail:

Joshua J. Stowell
Joshua.Stowell@knobbe.com
Joseph R. Re
Joe.Re@knobbe.com
Brian C. Barnes
Brian.Barnes@knobbe.com
BoxImperative011@knobbe.com

Dated: April 18, 2025 By: */ Kate Rose /*
Kate Rose