Trials@uspto.gov
571-272-7822

Paper: 10
Date: June 18, 2025

UNITED STATES PATENT AND TRADEMARK OFFICE

BEFORE THE PATENT TRIAL AND APPEAL BOARD

IMPERATIVE CARE, INC.,
Petitioner,

v.

INARI MEDICAL, INC.,
Patent Owner.

IPR2025-00289
Patent 11,554,005 B2

Before JEFFREY N. FREDMAN, ERIC C. JESCHKE, and TIMOTHY G. MAJORS, *Administrative Patent Judges.*

MAJORS, *Administrative Patent Judge*.

DECISION
Granting Institution of *Inter Partes* Review
35 U.S.C. § 314

I. INTRODUCTION

Imperative Care, Inc. ("Petitioner") filed a Petition (Paper 1, "Pet.") requesting *inter partes* review of claims 1–15 of U.S. Patent No. 11,554,005 B2 (Ex. 1001, "the '005 patent"). Pet. 1, 20. Inari Medical, Inc. ("Patent Owner") filed a Preliminary Response (Paper 5, "Prelim. Resp.").

Under 35 U.S.C. § 314(a), an *inter partes* review may not be instituted unless it is determined that there is a reasonable likelihood that the petitioner will prevail with respect to at least one of the claims challenged in the petition. For reasons explained below, we conclude that Petitioner shows a reasonable likelihood that it will prevail with respect to at least one of the '005 patent's challenged claims. In a separate decision, the Acting Director denied Patent Owner's request for discretionary denial. Paper 9. We institute *inter partes* review on all challenged claims. *See SAS Inst. Inc. v. Iancu*, 584 U.S. 357, 362–63 (2018); 37 C.F.R. § 42.108(a) ("When instituting *inter partes* review, the Board will authorize the review to proceed on all of the challenged claims and on all grounds of unpatentability asserted for each claim.").

Findings and conclusions at this stage are preliminary and based on the current record. Any final decision will be based on a full trial record.

II. BACKGROUND

A. Real Parties-in-Interest

Petitioner identifies itself as the real party-in-interest. Pet. 109. Patent Owner identifies itself as the real party-in-interest. Paper 4, 2.

B. Related Matters

The parties identify the following lawsuit involving assertion of the ’005 patent (and additional patents): *Inari Medical Inc. v. Imperative Care, Inc.*, No. 24-cv-3117 (N.D. Cal.).[1] Pet. 95; Paper 4, 2.

The parties also identify related matters before the Board. Pet. 109; Paper 4, 2–3. Those matters include IPR2024-01157 (“the 1157 IPR”) as challenging the claims of U.S. Patent No. 11,697,011, IPR2024-01257 (“the 1257 IPR”) as challenging the claims of U.S. Patent No. 11,744,691, and IPR2025-00156 (“the 0156 IPR”) as challenging claims of U.S. Patent No. 11,697,012. Paper 4, 2–3.[2] According to Patent Owner, the patent challenged in the 1257 IPR is related by priority to the ’005 patent, and the patents challenged in the 1157 and 0156 IPRs are not related by priority to the ’005 patent but may involve issues related to those presented here. *Id.*

Patent Owner further identifies numerous other patents and patent applications as related by priority to the ’005 patent. Paper 4, 3.

C. The ’005 Patent (Ex. 1001)

The ’005 patent is titled “System For Treating Embolism and Associated Devices and Methods.” Ex. 1001, code (54). The patent issued January 17, 2023, from an application filed July 14, 2022, and claims the priority benefit of two provisional applications filed August 13, 2018. *Id.* at codes (22), (45), (60).

---

[1] Patent Owner further states that *Inari Medical, Inc. v. Inquis Medical, Inc.*, No. 24-1023-CFC (D. Del.) involves “related and unrelated patents and may involve related issues.” Paper 4, 2.

[2] The Board instituted trial in the 1157 IPR and 0156 IPR. IPR2024-01157, Paper 7; IPR2025-00156, Paper 6. The Board denied institution in IPR2024-01257. IPR2024-01257, Paper 10.

According to the ’005 patent, “[t]he present technology relates generally to systems, methods, and devices for the intravascular treatment of emboli and/or thrombi within a blood vessel of a human patient.” *Id.* at 1:17–20. Figure 20C (reproduced below) is a side view of an illustrative clot removal system of the ’005 patent, with annotations added by Petitioner.

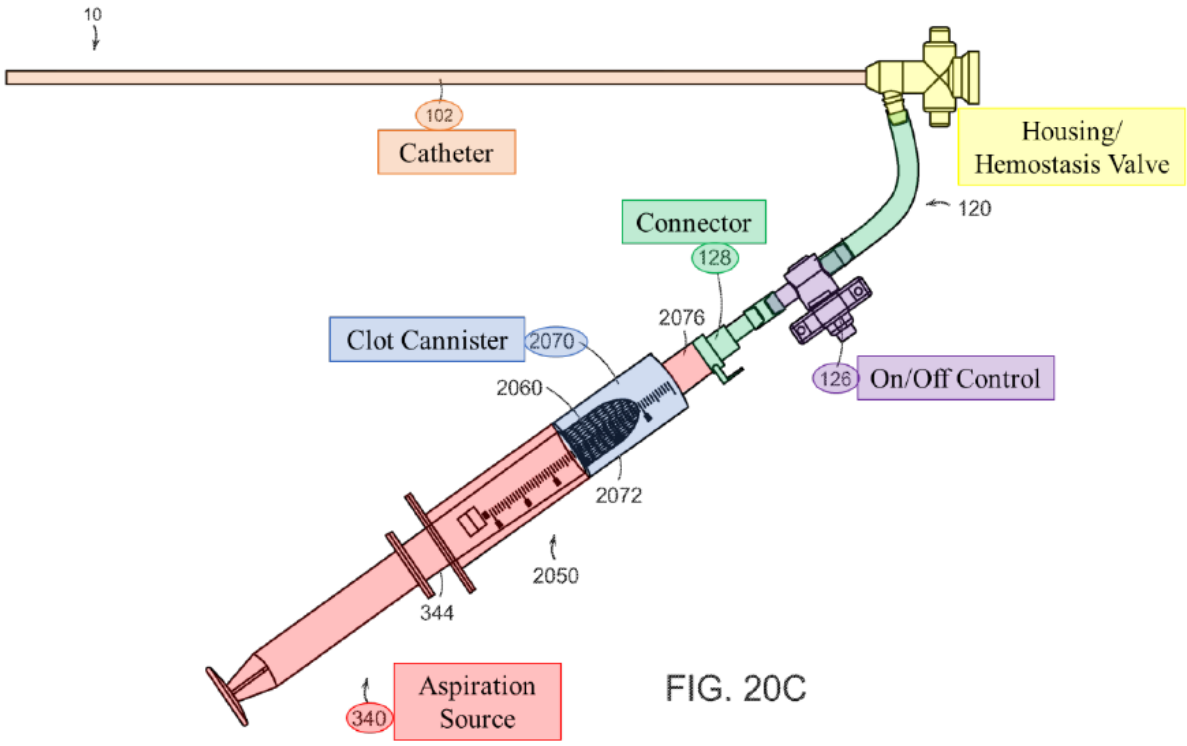

Pet. 2 (citing Ex. 1001, Fig. 20C). As shown in the figure above, aspiration assembly 10 includes catheter 102 (orange), syringe 340 (red and annotated as “Aspiration Source”), filter 2060 within barrel 2070 (blue and annotated “Clot Cannister”), connector 128 (green), fluid control device 126 (purple and annotated “On/Off Control”), and a hemostasis valve (unnumbered in Fig. 20C, yellow, and annotated “Housing/Hemostasis Valve”). Ex. 1001, 31:51–32:43; *see also id.* at Fig. 1, 5:18–6:16 (describing features of related Fig. 1, including hemostasis valve 106).

With respect to hemostasis valves, the ’005 patent states, *inter alia*:

> In some embodiments, the valve 106 can be a valve of the type disclosed in U.S. patent application Ser. No. 16/117,519, filed Aug. 30, 2018, and titled “HEMOSTASIS VALVES AND METHODS OF USE,” which is incorporated herein by reference in its entirety.

Id. at 5:49–54. Further disclosures about the hemostasis valves are found in U.S. Application No. 16/117,519 (“the ’519 Application” (Ex. 1017)), which we discuss below.[3] For this Decision, we treat those disclosures as having been incorporated by reference into the ’005 patent.

The ’519 Application explains that, “[i]n minimally invasive surgery, small incisions are created through a blood vessel [into] which one or several catheters are inserted.” Ex. 1017 ¶ 3. “These catheters are moved to a position proximate to tissue, nerves, or other body structures targeted by the surgery, and then tools for performing the procedure are inserted through the lumens of some or all of these catheters.” *Id.* “To minimize blood loss, prevent delivery of air into the vasculature, and to facilitate maintenance of sterility within the patient’s body . . . , these catheters are equipped with hemostasis valves.” *Id.* ¶ 4.

The ’519 Application discloses that “[t]he [hemostasis] valve can include a tubular [elongate] member that can be constricted, collapsed, and/or sealed by one or several tensioning mechanisms.” *Id.* ¶ 6. Further, “[t]he tensioning mechanism can include at least one filament that extends around at least a portion of the tubular member” and such “filament can

[3] The ’519 Application is a parent application to the patents challenged in the 1157 and 0156 IPRs. *See, e.g.*, IPR2024-01157, Ex. 1001, codes (21), (63) (indicating the ’519 Application is a grand-parent application to the application that issued as the challenged ’011 patent).

Imperative EX1017

interact with the tubular member to constrict, collapse, and/or seal the tubular member via manipulation of the tensioning mechanism(s)." *Id.* (disclosing that such valve, by action of the tensioning mechanism and filament, "can seal around a wide range of tool sizes and shapes, as well as multiple tools of differing sizes simultaneously" passed through the tubular member). According to the '519 Application, the tensioning mechanism includes an actuator coupled to the filament, which actuator controls movement of the filament from a first position (where the central lumen is constricted and sealed) to a second position (where the central lumen is un-constricted and open). *Id.* ¶ 9. Moreover, an actuator can be biased toward the first or second positions. *Id.*

We reproduce below the '519 Application's Figure 2, including Petitioner's annotations and additional annotation by the Board.

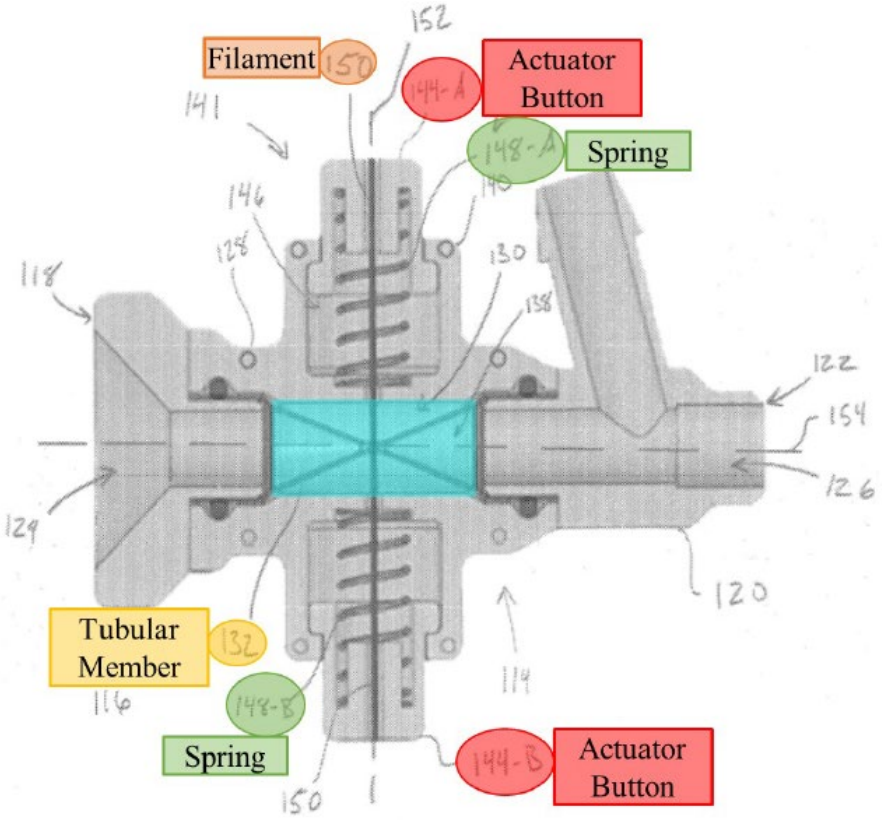

Figure 2

Pet. 3 (modified by blue highlight added by Board); Ex. 1017, Fig. 2.[4] Figure 2, depicted above, is a side cross-sectional view of an embodiment of a hemostasis valve that includes housing 128, elongate tubular member 132 (yellow) defining a central lumen 138 and having a central axis 154, constricting mechanism 141, filament 150 (orange highlights), and oppositely disposed actuator buttons 144-A and 144-B (red highlights). Ex. 1017 ¶¶ 41–45. In this embodiment, the filament is disposed at least partially around the elongate member and coupled to both actuator buttons (which are undepressed); the buttons are biased towards a first (closed) configuration by a bias feature (e.g., springs 148A, 148B (green highlights)) wherein the elongate member is collapsed and sealed in the region highlighted blue (central lumen 138) by a tension/force applied to the filament. *Id.* ¶¶ 44–45. Although not shown in the figure above, when the buttons are depressed, the constricting mechanism moves to a second (open) configuration where the filament is loosened, allowing expansion of the elongate member and unsealing of the central lumen. *Id.* ¶ 50, Fig. 3 (showing open configuration).

The ’519 Application discloses that the “filament 150 can be arranged in a variety of configurations.” Ex. 1017 ¶ 66. The filament can comprise a “single loop 604 that can extend around the elongate member 132 and/or

[4] Patent Owner provides (as Exhibit 2004) replacement drawings submitted during the ’519 Application’s prosecution. Those cleaned-up drawings are substantially the same as drawings cited and annotated by the parties from the ’011 and ’012 patents challenged in the related 1157 and 0156 IPRs. *See, e.g.*, IPR2025-00156, Paper 6 at 5 (annotated version of Fig. 2 of the ’012 patent).

through which the elongate member 132 can be received as shown in Figure 6." *Id.* Alternatively, the filament may comprise one or more "U-shaped section[s]" or "bight[s]" like shown in Figures 8 and 9. *Id.* ¶ 67 (disclosing that "filament 150 can be configured to form a bight 800, which bight 800 can be a single bight or multiple bights" and, "[a]s used herein, a 'bight' refers to a U-shaped section between the two ends of the filament 150"). Moreover, the "filament can be made from a variety of materials including, for example, a polymer, a synthetic, and/or a metal." *Id.* ¶ 47.

Figures 6–9 of the '519 Application are reproduced below.

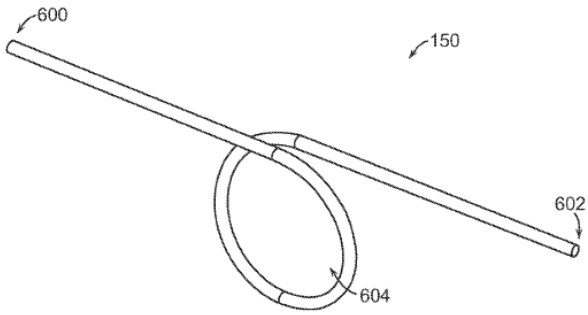

FIG. 6

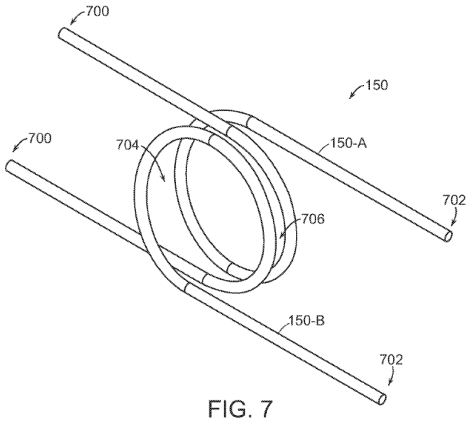

FIG. 7

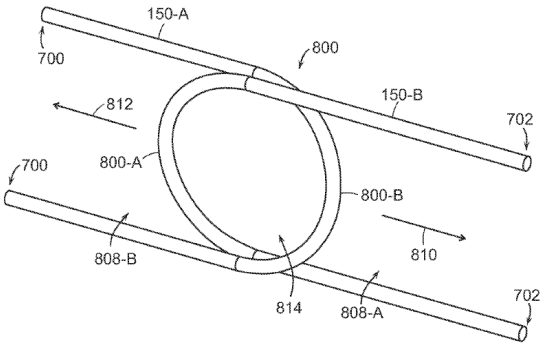

FIG. 8

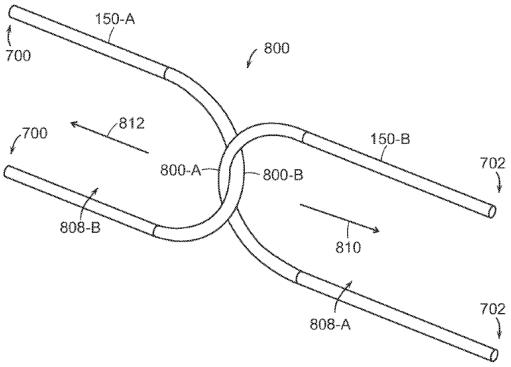

FIG. 9

Ex. 2004, Figs. 6–9. Figures 6–9 above show various filament configurations: "single loop" (Fig. 6), "multiple loops" (Fig. 7), or multiple "bights" (Figs. 8 and 9), which can be non-interlocking or interlocking. Ex. 1017 ¶¶ 66 (describing "single loop 604" and "multiple loops" (704,

706) embodiments as depicted in Figs. 6 and 7, respectively), 67 ("As used herein, a 'bight' refers to a U-shaped section between two ends of the filament 150" as depicted in Figures 8 and 9). The '519 Application discloses that "the filament 150 can comprise multiple filaments . . . as shown in Figures 7 through 9." *Id.* ¶ 65.

The '519 Application discloses that, in "loop" embodiments like shown in Figures 6 and 7, a filament can be configured to form a "loop" (or "loops") "that can extend around the elongate member 132 [(not shown)] and/or through which the elongate member can be received." *Id.* ¶ 66. Further, "a diameter or size of the loop 604, or of the loops 704, 706 can decrease when the constricting mechanism 141 is moved from the second configuration to the first configuration." *Id.*

Figures 8 and 9 above depict a filament comprising first and second interlocking "bights" 800A, 800B for receiving and extending around respective portions of an elongate member. *Id.* ¶ 67. The "bights" 800A and 800B define an "encircled area 814" into which the elongate member can be received; movement of those bights in the directions indicated by arrows 812 and 810 "decreases the size of the encircled area 814 and constricts, collapses, and/or seals the elongate member 132 extending through the encircled area." *Id.* ¶ 69.

D. Illustrative Claims

Petitioner challenges claims 1–15. Claims 1 and 10 are the only independent claims. Those claims are reproduced below:

1. A vacuum aspiration system, comprising:
    a housing;
    a flow path extending through the housing;
    an on-off control in the flow path;

a first catheter in fluid communication with the flow path and a connector configured to place a source of aspiration in communication with the flow path;

a clot cannister fluidly coupled to the flow path; and

a hemostasis valve in the housing configured to receive a second catheter and direct the second catheter through the first catheter, wherein the hemostasis valve comprises:

a tubular member defining a lumen configured to slidably receive the second catheter;

a constricting mechanism including a filament and an actuator coupled to the filament, the filament comprising a first portion extending around at least a portion of the tubular member and a second portion having a first end extending from the first portion in one direction and a second end extending from the first portion in another direction, and the actuator comprises a first member coupled to the first end of the filament and a second member coupled to the second end of the filament, wherein the first member and the second member are moveable between (a) a first position wherein the filament circumferentially constricts the lumen to create a seal and (b) a second position wherein the filament is moved to at least partially open the lumen; and

a biasing system configured to bias the first member and the second member to the first position.

Ex. 1001, 35:49–36:13.

10. A vacuum aspiration system, comprising:

a housing;

a flow path extending through the housing;

an on-off control in the flow path;

a first catheter in fluid communication with the flow path and a connector configured to place a source of aspiration in communication with the flow path;

a clot cannister fluidly coupled to the flow path; and

a hemostasis valve in the housing configured to receive a second catheter and direct the second catheter through

the first catheter, wherein the hemostasis valve comprises

(a) a support;

(b) an actuator having at least a first member movably coupled to the support;

(c) a collapsible tubular sidewall defining a lumen carried by the support;

(d) a filament formed in a loop around the tubular sidewall, the filament having at least a first end portion extending away from the loop to the first member; and

(e) a first spring configured to move the first member in a direction that pulls the first end portion such that the diameter of the lumen decreases in response to reducing a diameter of the loop.

Id. at 36:56–37:13.

E. Prior Art and Asserted Grounds

Petitioner asserts that claims 1–15 are unpatentable based on the following grounds:

Grounds	Claims Challenged	35 U.S.C. §[5]	References/Basis
1	1–12, 14, 15	103	Garrison,[6] Schaffer[7]
2	1–15	103	Garrison, Schaffer, Hartley[8]
3	1–15	103	Garrison, Schaffer, Eller[9]
4	1–3, 5, 6, 9–15	103	Garrison, Hartley, Eller

Petitioner also relies on testimony from Troy L. Thornton (Ex. 1003) in support of its challenge. In response, Patent Owner relies on testimony from Paul J. Zalesky, Ph.D. Ex. 2001.

[5] The Leahy-Smith America Invents Act ("AIA"), Pub. L. No. 112–29, 125 Stat. 284, 285–88 (2011), revised 35 U.S.C. §§ 102, 103 effective March 16, 2013. Based on the uncontested assertion that August 13, 2018, is the earliest possible priority date for the '005 patent, we apply the AIA versions of §§ 102 and 103 in this Decision. Pet. 16.

[6] Garrison et al., US 2015/0173782 A1, published June 25, 2015 (Ex. 1011, ("Garrison")).

[7] Schaffer et al., US 2003/0225379 A1, published Dec. 4, 2003 (Ex. 1005 ("Schaffer")).

[8] Hartley, US 2003/0116731 A1, published June 26, 2003 (Ex. 1006 ("Hartley")).

[9] Eller, US 9,980,813 B2, issued May 29, 2018 (Ex. 1007 ("Eller")).

III. ANALYSIS

A. Legal Standards

"In an [*inter partes* review], the petitioner has the burden from the onset to show with particularity why the patent it challenges is unpatentable." *Harmonic Inc. v. Avid Tech., Inc.*, 815 F.3d 1356, 1363 (Fed. Cir. 2016) (citing 35 U.S.C. § 312(a)(3)).

A claim is unpatentable under 35 U.S.C. § 103 if the differences between the claimed invention and the prior art are such that the claimed invention as a whole would have been obvious at the time the invention was made[10] to a person having ordinary skill in the relevant art. *KSR Int'l Co. v. Teleflex Inc.*, 550 U.S. 398, 406 (2007). The question of obviousness is resolved on the basis of underlying factual determinations including: (1) the scope and content of the prior art; (2) any differences between the claimed subject matter and the prior art; (3) the level of ordinary skill in the art; and (4) secondary considerations (i.e., objective indicia) of nonobviousness when presented.[11] *Graham v. John Deere Co.*, 383 U.S. 1, 17–18 (1966).

To show unpatentability based on a combination of teachings, "[a]n obviousness determination [also] requires finding both that a skilled artisan would have been motivated to combine the teachings of the prior art references to achieve the claimed invention, and that the skilled artisan

---

[10] The AIA revised § 103 such that obviousness is assessed "before the effective filing date of the claimed invention," but *KSR* and other obviousness precedents cited herein remain applicable despite this change in the timing of the obviousness inquiry.

[11] Petitioner states that it is not aware of any objective indicia of nonobviousness (Pet. 107) and Patent Owner's Preliminary Response does not provide argument about any objective indicia.

would have had a reasonable expectation of success in doing so." *CRFD Rsch., Inc. v. Matal*, 876 F.3d 1330, 1340 (Fed. Cir. 2017) (internal quotation marks and citation omitted).

B. Level of Ordinary Skill in the Art

Petitioner proposes that the person of ordinary skill in the art ("POSA") in August 2018 "would have had an undergraduate degree in mechanical engineering or a related engineering discipline and 2–4 years of catheter design experience." Pet. 17 (citing Ex. 1003 ¶ 35). Patent Owner provides no alternative definition of the POSA's qualifications and, instead, applies Petitioner's definition in its Preliminary Response. Prelim. Resp. 26.

We apply Petitioner's proposed POSA level for this Decision, which level appears to be reasonable and consistent with the cited prior art.

C. Claim Construction

In an IPR, we construe claims using the same claim construction standard used in a civil action before the courts under 35 U.S.C. § 282(b), including construing claim language in accordance with its ordinary and customary meaning as understood by the POSA, in view of the patent's specification and considering the patent's prosecution history. 37 C.F.R. § 42.100(b). We need only construe terms where the parties dispute a term's meaning and only to the extent needed to resolve the controversy. *Realtime Data, LLC v. Iancu*, 912 F.3d 1368, 1375 (Fed. Cir. 2019).

The parties dispute the interpretation of the term "filament," which appears in each of the challenged claims. Pet. 17–19; Prelim. Resp. 18–26 (rebuttal argument). We address this dispute below.

Independent claim 1 recites, among other limitations, a "constricting mechanism including a *filament*" where "the filament circumferentially constricts the [tubular member's] lumen to create a seal." Independent

claim 10 recites "a *filament formed in a loop* around the tubular sidewall [defining a lumen]" where movement of an actuator's first member "pulls the [filament's] first end portion such that a diameter of the lumen decreases in response to *reducing a diameter of the loop*." *See supra* Section II.D. (emphases added).

According to Petitioner, a POSA would have understood the term "filament" to mean "at least 'one or more threads, lines, cords, ropes, ribbons, flat wires, sheets, or tapes.'" Pet. 17 (citing Ex. 1003 ¶¶ 54–60). Petitioner contends this interpretation is supported by the intrinsic evidence. *Id.* at 18–19 (citing Ex. 1017 ¶ 47).

For its part, Patent Owner argues that a "POSA would understand that the term 'filament' recited in Claims 1 and 10 should be accorded its plain and ordinary meaning, 'a thin, flexible length of material formed by one or more strands of material.'" Prelim. Resp. 19–20. According to Patent Owner, this interpretation is consistent with the intrinsic evidence and is supported by extrinsic evidence, including dictionary definitions and deposition testimony from Petitioner's declarant in another proceeding. *Id.* at 20–25 (citing, e.g., Ex. 1017 ¶¶ 50, 64–65; Ex. 2003, 644; Ex. 2005, 123:1–3). And, Patent Owner contends, Petitioner's proposed interpretation is too broad, ignoring that a filament is "flexible." *Id.* at 19.

The parties' core claim construction dispute is whether the filament of all the challenged claims must be "flexible."[12]

---

[12] The dispute about the claims being limited to "flexible" filaments is potentially dispositive only for Ground 1 (because Schaffer is alleged to teach "rigid" actuating members as the claimed filament). Prelim. Resp. 28. For the remaining grounds, Patent Owner does not dispute that Hartley and Eller disclose a flexible filament (e.g., flexible string/wire).

We provided our preliminary views about substantially the same claim construction dispute in our Institution Decisions from the related 1157 and 0156 IPRs. *See* IPR2024-01157, Paper 7 at 12–18; IPR2025-00156, Paper 6 at 12–21. We adopt and maintain those preliminary views, which we summarize below, in this Decision.

Much like claim 1 here, challenged claim 1 in the related 1157 IPR *does not* recite a filament that is "formed into a loop" where the loop's diameter decreases to close/seal the valve. Hence, we explained, claim 1 in the 1157 IPR arguably covered "loop" and "bight" embodiments disclosed in the challenged patent. IPR2024-01157, Paper 7 at 15–18. And, we noted, although the loop embodiments required a flexible filament to be operable, the same was not evident for the bight embodiments. *Id.* (questioning why two substantially rigid, metal bights could not function as claimed); *see also id.* at 16 (finding that "a flexible filament is required" in the loop embodiment shown in Figure 6).

The '519 Application (from which the '005 patent derives the relevant disclosure about filament features) includes the same disclosures concerning "loop" and "bight" embodiments as in the patent challenged in the 1157 IPR. Ex. 1017 ¶¶ 64–69, Figs. 6–9. And claim 1 of the '005 patent encompasses, but is not limited to, filaments that form a loop. Thus, similar to our preliminary decision in the 1157 IPR, we decline at this time to construe the filament of claim 1 of the '005 patent as limited to a "flexible" filament.[13]

---

[13] In this proceeding, Patent Owner also cites a dictionary definition for the word "bight" to suggest that, even where bight embodiments are concerned, the filament must be "slack" or loose. Prelim. Resp. 23 (citing Ex. 2002, 120); *see also id.* at 22 (citing Ex. 1017 ¶ 50 (disclosing that the filament is "loosened" by actuation of the valve's buttons)). This evidence provides some added support for Patent Owner's interpretation, but we determine

Conversely, when a claim requires "a filament formed into a loop" as recited in claim 10 of the '005 patent, we conclude that flexibility is required. We explained our preliminary views on substantially the same issue in more detail in the Institution Decision in the related 0156 IPR.

In the 0156 IPR Institution Decision, we found that the intrinsic evidence distinguished between filaments that form a "loop" as claimed versus filaments that form "bights." IPR2025-00156, Paper 6 at 18–19. We found that "the Specification describes the two types of filaments separately—using different terminology to describe how loops and bights are formed, and how loops and bights interface with an elongate, collapsible tubular member to provide the collapsing/constricting function." *Id.* at 18. We cited the following disclosure in the challenged patent from the 0156 IPR to illustrate those distinctions:

> In ***some embodiments***, the at least one filament ***forms a loop around the elongate member***, and moving the tensioning mechanism from the second configuration to the first configuration ***reduces the size of the loop to thereby constrict the tubular member within the loop***. In ***some embodiments***, the ***filament forms at least one bight around a portion of the elongate member***. . . . In some embodiments, the at least one bight can include a first bight oriented in a first direction . . . and a second bight oriented in a second direction . . . . In ***some embodiments***, the ***first and second bights overlap to encircle a portion of the tubular member within a constricting area***.

Id.; *see also* IPR2025-00156, Ex. 1001, 4:62–5:8 (emphasis added). The '519 Application (and the '005 patent insofar as it incorporates the '519 Application's disclosures) includes the same disclosures distinguishing

---

under the circumstances here that it is best to resolve this issue on a fully-developed record and after Petitioner has had an opportunity to respond.

between loops and bights. *See, e.g.*, Ex. 1017 ¶ 19; *see also id.* ¶ 74 (describing loop embodiments as "decreasing . . . the size and/or diameter of one or several loops" versus "bight" embodiments that "reduce the size of the constricting area"); *see also id.* Figs. 6–7 (depicting loop embodiments), Figs. 8–9 (depicting a bight embodiment).

In the related 0156 IPR, we also found persuasive Dr. Zalesky's testimony explaining that, if a filament was "rigid or inflexible the loop would retain the same diameter when acted on by the actuator" and would not work as claimed. IPR2025-00156, Paper 6 at 15. Dr. Zalesky provides substantially the same testimony here. Ex. 2001 ¶ 69 ("This inherent property of flexibility is essential to the loop structure of the claims."). This testimony supports Patent Owner's interpretation and Petitioner provides, at this time, no persuasive evidence to the contrary.

Accordingly, similar to our determination in the related IPRs, we maintain the preliminary view that claim 10's filament should be construed to require flexibility. That is, the filament must be sufficiently flexible that it can be "formed in a loop around the tubular sidewall" and that, upon the filament's first end portion being pulled by the actuator, the "diameter of the lumen decreases in response to reducing a diameter of the loop" as otherwise expressly recited in claim 10.[14]

---

[14] If Patent Owner contends that any prosecution history is relevant to claim construction, such as the election/restriction requirement entered during prosecution of the '012 patent challenged in the 0156 IPR (*see* IPR2025-00156, Paper 6 at 19–20), Patent Owner should make such argument expressly during trial and confirm that all relied-upon evidence is of-record in this proceeding.

D. Asserted References

Petitioner asserts, and Patent Owner does not dispute, that Schaffer, Hartley, Eller, and Garrison are each prior art under 35 U.S.C. § 102(a)(1). Pet. 20.

1. Schaffer (Ex. 1005)

Schaffer is a U.S. patent application that published December 4, 2003. Ex. 1005, code (43). Schaffer is titled "Composite Stasis Valve" and describes a "valve for blocking the flow of gas or fluid with or without an instrument in place within the gas/fluid path." *Id.* at Abstr.; *see also id.* ¶¶ 2–3 (disclosing that Schaffer "relates to catheters, in particular to composite fluid-stasis valves for use with catheters" and "[f]luid stasis mechanisms are commonly used to prevent loss of fluids from the insertion site of a catheter").

An embodiment of Schaffer's fluid-stasis valve, including Petitioner's annotations, is shown below.

First Position – Actuator Buttons Undepressed

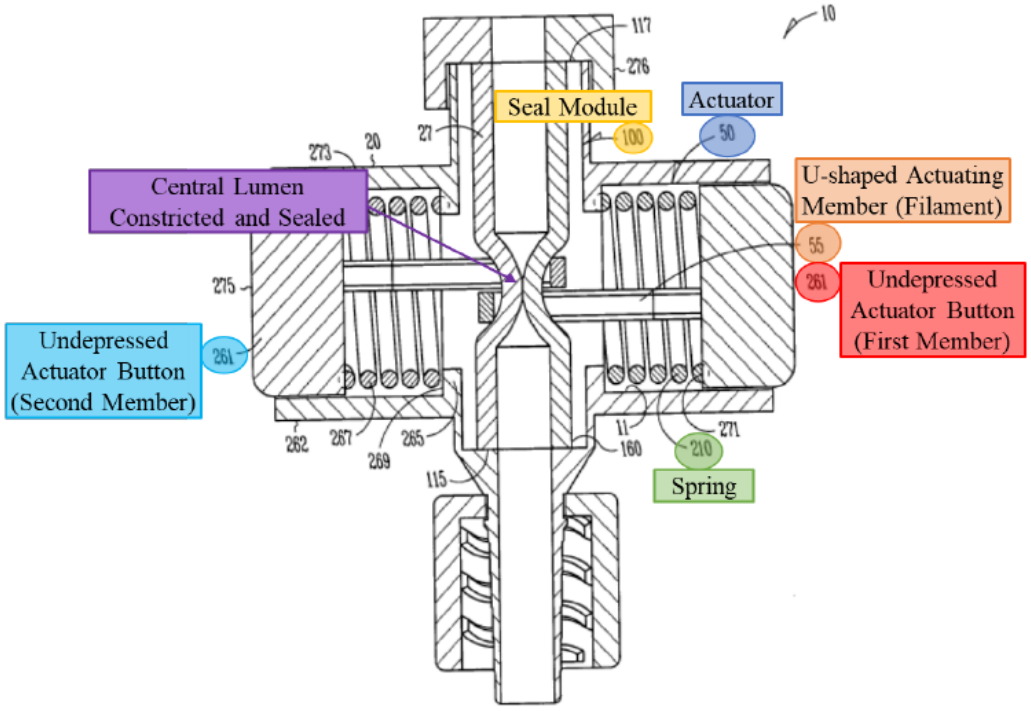

Fig. 32

Pet. 42 (Ex. 1008, Fig. 32[15] (annotated)); Ex. 1005, Fig. 32, ¶ 75 ("FIGS. 30–34 illustrate one embodiment of the stasis valve 10 including a seal module 100 having a lumen sized to allow the passage of fluids or gases."); Ex. 1008, 16–19 (Figs. 30–34). Schaffer's Figure 32, above, is a cross-sectional view of valve 10 in a "first position," where actuator button(s) 261 (blue and red highlights) are undepressed, allowing seal module 100 (yellow highlight) to take on a collapsed configuration such that a central lumen (purple highlight) is at least partially collapsed/constricted and sealed by a compressive force provided by spring(s) (green highlight), which force is applied to U-shaped actuating member(s) 55 (orange

[15] Petitioner uses drawings from Schaffer submitted during prosecution of the Schaffer application due to those drawings' improved clarity compared to the drawings appearing in the application as published. Ex. 1008.

highlight (argued as the "filament" by Petitioner)). Ex. 1005, Fig. 32, ¶¶ 75–77; Ex. 1008, 17.

Schaffer discloses that, in the first position, actuating members 55 "are, in one option, disposed at least partially circumferencially [*sic*] disposed about" the seal module "depressing and at least partially collapsing a portion 108 of the containment structure 160 by a compressive force 67 (e.g., by a spring 210)." Ex. 1005 ¶ 77. Schaffer teaches actuating members may optionally comprise aluminum or plastic. Ex. 1005 ¶¶ 81, 82 (actuating members and buttons may, for example, be machined from aluminum).

Although not shown in Figure 32 above, when the actuator buttons of this illustrated embodiment are pressed, the stasis valve takes on a "second [open or unsealed] position." Ex. 1005 ¶ 77, Fig. 34 (showing the valve with both buttons depressed such that central portion of the valve lumen/seal module retracts to an unsealed configuration). According to Schaffer:

> In the second position, the actuators 50 are disposed away from a portion 108 of the seal module 100 by a compressive force 67 (e.g., by depressing the distal end 275 of the actuator button 261). As each actuator button 261 is depressed, each actuator 50 slides along the cylindrical interior wall 11 of the housing 20. The proximal end 273 of each actuator button 261 compresses the distal end 271 of each resilient member 267 which in turn, the proximal end 269 of each resilient member 267 compresses against the inner flange wall 265 of the housing 20. Such movement allows each engaged actuating member 55 to forcibly disengage opposing outer walls 27 of seal module 100 allowing the portion 108 of the containment structure 160 to retract to an uncollapsed configuration where gases and fluids can pass therethrough.

Id. ¶ 77, Fig. 34.

2. Hartley (Ex. 1006)

Hartley is a U.S. patent application that published June 26, 2003. Ex. 1006, code (43). Hartley is titled "Access Valve" and relates to an access valve for laparoscopic or intralumenal deployment devices. *Id.* at Abstr., code (54); *see also id.* ¶ 3 ("The invention will be discussed in . . . relation to fluid flow prevention and access valves in medical applications for instance where it is desired to seal around a catheter or other instrument . . . to prevent loss of blood or other fluid.").

Hartley's Figure 5 is reproduced below.

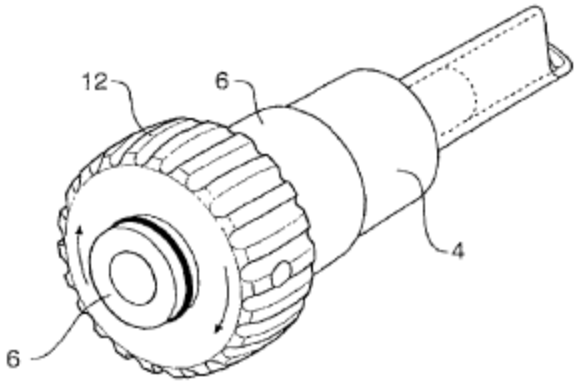

Fig 5

Ex. 1006, Fig. 5. Figure 5 above is a perspective view of an illustrative delivery catheter and constriction valve described in Hartley. *Id.* ¶ 29. The valve includes, *inter alia*, catheter body 4, cylindrical housing 6, and rotary actuator 12. *Id.* ¶ 31.

The action of Hartley's valve is more clearly seen in Figures 3 and 4, reproduced side-by-side below.

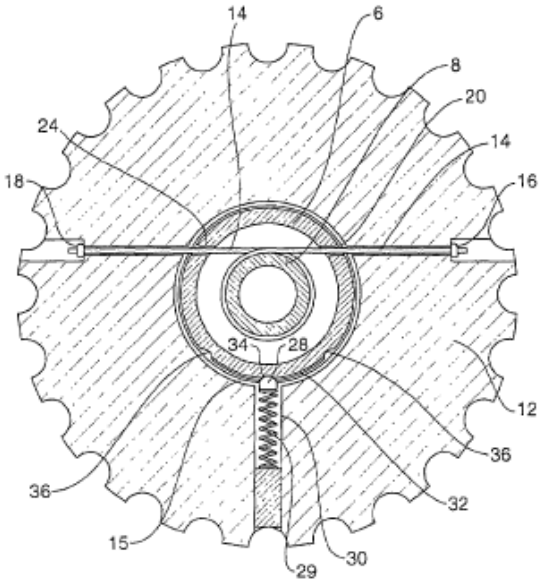

Fig 3

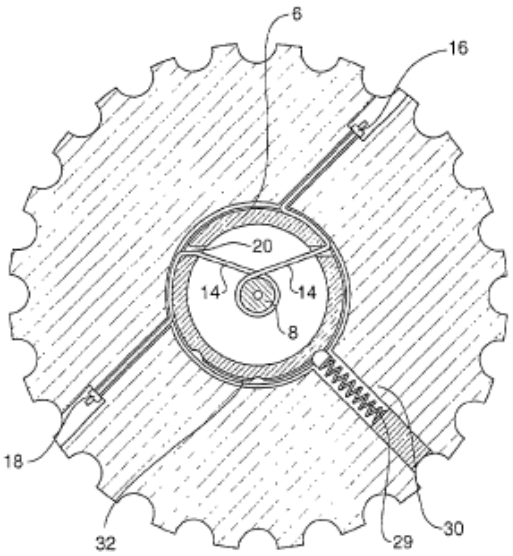

Fig 4

Ex. 1006, Figs. 3–4. Figures 3 and 4 of Hartley are top, cross-sectional views of a constriction valve, showing, respectively, the valve in an open and closed configuration. *Id.* ¶¶ 27–28, 31–34. In the open configuration (above left), rotary actuator 12 is mounted to cylindrical housing 6, and a string 14 is mounted to portions of the rotary actuator with knots 16, 18. *Id.* ¶ 31. String 14 (or another suitable flexible member) is wound around a cylindrical elastomeric diaphragm 8. *Id.*; *see also id.* ¶¶ 16–17 ("The flexible member may be a string, suture or band or other suitable material.").

Hartley teaches that "[r]otation of the rotary actuator 12 with respect to the cylindrical housing 6 will cause the string 14 to be pulled in both directions at once and hence the cylindrical diaphragm 8 to be constricted" and sealed as shown in Figure 4 (above right). *Id.* ¶¶ 31, 34. According to Hartley, its invention provides "an access or constriction valve arrangement which will close over a range of diameters of devices passed through the valve or can close completely down to be self[-]sealing." *Id.* ¶ 37.

3. Eller (Ex. 1007)

Eller is a U.S. patent that issued May 29, 2018. Ex. 1007, code (45). Eller relates to "[s]elective fluid barrier valve devices" and methods of treatment using such devices. *Id.* at Abstr.

Eller describes "a selective fluid barrier device compris[ing] a housing, an actuator, a sleeve, a wire member, and a connector." *Id.* "The sleeve defines a passageway that extends through the [valve]" and [t]he actuator is movable between a first position and a second position" where the first position allows fluid to pass through the sleeve and, in the second position, fluid cannot pass through the sleeve. *Id.*

An embodiment of Eller's selective fluid barrier valve device is shown in Figure 15 below.

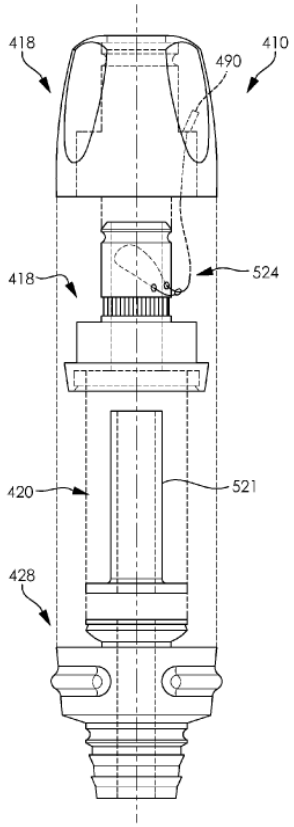

FIG. 15

Ex. 1007, Fig. 15; *see also id.* Figs. 1–2 (perspective and exploded views of similar valve device). Figure 15, reproduced above, is an exploded view of an illustrative selective fluid barrier valve of Eller. The valve device 410 includes, among other features, actuator 418, sleeve 420, and a wire member 422 (not labeled) with a first end 524 attached to actuator 418 within cavity 490. *Id.* at 21:37–22:10 ("wire member can be positioned such that it extends at least one full revolution around the outer surface of the sleeve"); *see also id.* at Figs. 16–17 (showing wire 422 looped around sleeve 420 within housing 416). As disclosed in Eller, movement (e.g., rotation) of the actuator from its first position to its second position pulls the wire member to constrict and close sleeve 420. *See, e.g.*, *id.* at 22:25–31, 1:55–2:6 (disclosing that, in the second configuration, "the sleeve passageway is closed and prevents fluid from passing"). Eller further teaches that the valve device can "be biased to the second [(closed)] configuration" by, for example, using a spring. *Id.* at 19:22–30.

Eller teaches that its disclosure applies to many types of actuators. *Id.* at 8:27–44. According to Eller, "while a rotatable member 29 has been illustrated, a selective fluid barrier valve device can include any suitable actuator capable of moving . . . between a first configuration and a second configuration. Skilled artisans will be able to select a suitable actuator" and "[e]xample actuators . . . include rotatable actuators, linear actuators, slidable actuators . . . and any other actuator considered suitable for a particular embodiment." *Id.*

Eller discloses that a "wire member . . . can have any suitable structure and comprise any suitable number of strands and/or fibers that are twisted, or otherwise interconnected to one another." *Id.* at 15:61–16:6 (teaching "wire member can comprise a suture or a cable"). Eller discloses

that "[a]ttachment between a wire member and a housing and/or an actuator can be accomplished using any suitable method or technique" including, for example, "adhesives, welding, [or] fusing." *Id.* at 14:37–53.

4. Garrison (Ex. 1011)

Garrison is a U.S. patent application that published on June 25, 2015. Ex. 1011, code (43). Garrison is titled "Methods and Systems for Treatment of Acute Ischemic Stroke" and relates to a system for treating an artery, especially the cerebral arterial vasculature. *Id.* at Abstr., code (54); *see also id.* ¶¶ 2 ("[T]he present disclosure relates to methods and systems for transcarotid access of the cerebral arterial vasculature and treatment of cerebral occlusions."), 7 ("Disclosed are methods and devices that enable safe, rapid and relatively short transcarotid access to the cerebral and intracranial arteries to treat acute ischemic stroke . . . [and] include one or more transcarotid access devices, catheters, and thrombectomy devices to remove the occlusion.").

Garrison discloses embodiments having "aspiration and flow control elements configured to be used with an arterial access device, a guide catheter, and/or a catheter of the disclosed system." *Id.* ¶ 130. An embodiment of Garrison's system is shown in Figure 34 below (with the Board's annotation of hemostasis valves in the system). Ex. 1011, Fig. 34.

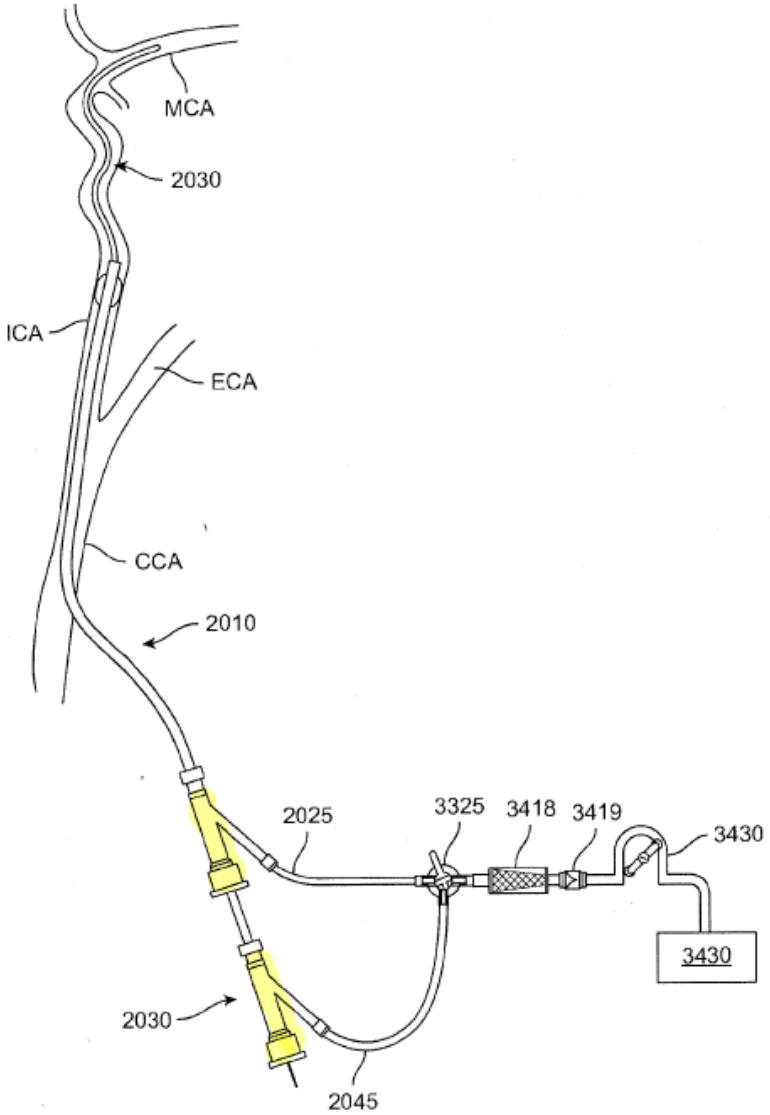

FIG. 34

Garrison's Figure 34, above, is a side perspective view of an example system for treating an artery (e.g., the middle cerebral artery (MCA)) with active aspiration. *Id.* ¶ 29, Fig. 34 (annotated). The system of Figure 34 includes, among other features, catheter 2030, flow lines 2025 and 2045, control valve 3325, filter 3418, and aspiration source 3430. *Id.* ¶¶ 131–132. The system may also include hemostasis valves (highlighted yellow in Fig. 34 above). *See id.* ¶ 61 ("The hemostasis valve 226 [(as numbered in Fig. 6)] can be a static seal-type passive valve, or an adjustable-opening

valve such as a Tuohy-Borst valve 227 or rotating hemostasis valve (RHV) (see FIG. 6)."); *see also id.* ¶ 53 (disclosing the system may include hemostasis valves "to allow introduction of devices while preventing or minimizing blood loss during the procedure").

E. Obviousness over Garrison and Schaffer (Ground 1)

Petitioner argues that claims 1–12, 14, and 15 would have been obvious over the combination of Garrison and Schaffer. Pet. 20–88. The discussion below focuses on Petitioner's challenge to independent claims 1 and 10 and Patent Owner's counterargument on those two claims.[16]

1. Claim 1

Petitioner contends that Garrison teaches all the limitations of claim 1, except the specific features of claim 1's hemostasis valve, including the recited "filament" and the "biasing system." Pet. 21–61. Petitioner relies on Schaffer as teaching or suggesting those features. *Id.* at 38–49, 60–61.

Petitioner argues that Garrison discloses claim 1's preamble (if limiting), as well as the housing, flow path, on-off control, first catheter, connector, and clot cannister limitations. Pet. 21–33 (citing, e.g., Ex. 1011 ¶¶ 7, 29, 48, 59, 62, 65, 67, 98, 130–133, 142, Figs. 9, 32–35). Patent Owner provides no argument to the contrary.

Petitioner contends that, although Garrison discloses that its system may include one or more hemostasis valves, Garrison does not expressly describe a hemostasis valve with all the features of claim 1. Pet. 35 (noting that Garrison teaches that, for example, adjustable or rotating hemostasis

[16] Patent Owner does not at this time raise separate argument related to the patentability of the dependent claims. Prelim. Resp. 73 (asserting only that the dependent claims include the respective limitations of claims 1 and 10 from which they depend).

valves may be used (citing Ex. 1011 ¶¶ 62, 65, 98)). Petitioner therefore turns to Schaffer and its teaching of an adjustable-opening "fluid stasis valve" that includes two actuator buttons, each coupled to a U-shaped actuating member (those members "collectively" forming the alleged "filament") that are disposed about a seal module and that constrict the seal module and tubular member, thereby allowing the closing and opening of the valve. Pet. 38–49 (citing, e.g., Ex. 1005 ¶¶ 2, 46, 49, 55, 58, 75–77, 81, Figs. 12, 31–32, 34). Petitioner also contends that Schaffer's hemostasis valve includes resilient springs that bias the actuator buttons to a first (i.e., closed) position and, thus, satisfy claim 1's recited "biasing system." *Id.* at 60–61 (citing Ex. 1005 ¶¶ 76–77, Fig. 32).

Petitioner contends a POSA would have been motivated to use Schaffer's hemostasis valve in Garrison's aspiration system for several reasons. Pet. 35–37. For example, Petitioner contends that Garrison discloses that adjustable-opening valves may be used, that Schaffer suggests its valve may be used with interventional catheters of the type described in Garrison, and that a skilled artisan would have recognized that Schaffer's valve, with its features biasing the valve to a closed position, could simplify operation of Garrison's system by avoiding a need to manually close/seal the valve during procedures. *Id.* (citing Ex. 1003 ¶¶ 95–99).

We find that Petitioner's contentions are supported by the cited teachings in the references and the testimony of Mr. Thornton. Petitioner's evidence is sufficient at this stage and we determine that Petitioner is reasonably likely to prevail in showing that at least claim 1 would have been obvious over Garrison and Schaffer. Below we explain why Patent Owner's counterargument does not undermine Petitioner's showing on this record.

Imperative EX1017

Patent Owner argues that "Petitioner implicitly admits that Schaffer's U-shaped members are rigid" and, if those members are rigid and "not flexible," they cannot be a "filament" as recited in claim 1. Prelim. Resp. 28–31. We agree with Patent Owner that Petitioner admits that Schaffer's U-shaped actuating members are substantially rigid. Pet. 51 (asserting that actuation of Schaffer's U-shaped members to constrict the seal module would create small gaps and routes for possible fluid leakage compared to a flexible string or wire). Nevertheless, Patent Owner's argument is premised on claim 1's filament being met only by "flexible" structures. We decline to limit claim 1 as proposed by Patent Owner at this time for the reasons discussed above. *See supra* Section III.C.

Patent Owner argues that Schaffer does not disclose a "single" filament with two ends extending in different directions as allegedly required by claim 1. Prelim. Resp. 31–35. In Schaffer's valve, Patent Owner notes, one U-shaped actuating member has two ends attached to a first button, and a second U-shaped actuating member has two ends attached to a different, second button. *Id.* at 31–32 (citing Ex. 1005 ¶ 76; annotating Schaffer's Fig. 31). Patent Owner contends that Petitioner's assertion that the two U-shaped actuating members "collectively" satisfy the filament as claimed is unsupported and incorrect. *Id.* at 32–35.

We disagree with Patent Owner's argument. Claim 1 does not recite a "single" filament. The '005 patent (by incorporating the '519 Application) discloses that "the filament 150 can comprise multiple filaments," such as "shown in Figures 7–9." Ex. 1017 ¶ 65, Figs. 8–9 (illustrating a bight embodiment where the filament 150 comprises sub-filaments 150-A and 150-B). Figure 8 shows one sub-filament or "bight" with both ends labeled as "first end 700" and the other sub-filament or "bight" with both its ends

Imperative EX1017

labeled as "second end 702." *Id.* at Fig. 8, ¶ 65. Schaffer's two U-shaped actuating members, which (flexibility assertions aside) resemble the '005 patent's "bight" embodiment in Figures 8–9. This evidence supports Petitioner's contention that Schaffer's two actuating members can "collectively" satisfy claim 1's "filament" and the "first end" and "second end" recitations. Pet. 45. Patent Owner dismisses the disclosure about Figures 8 and 9 as including "an obvious typographical [error] in the labeling." Prelim. Resp. 34–35. Yet despite the alleged obviousness of this "typographical" error, Patent Owner has never (to our knowledge) formally sought to correct it in any of the several related patents or applications that include this disclosure. Ex. 1017, Figs. 8–9 (original drawings including alleged error); Ex. 2004, Figs. 8–9 (replacement drawing including alleged error); IPR2024-01157, Ex. 1001 ('011 patent), Figs. 8–9 (including alleged error); IPR2025-00156, Ex. 1001, ('012 patent), Figs. 8–9 (same); IPR2024-01157, Paper 7 at 21 (explaining why the alleged error is not of the sort that the Board may itself correct).[17]

We are not persuaded that the authorities cited by Patent Owner compel a different interpretation. Prelim. Resp. 33 (citing, e.g., *Salazar v. AT&T Mobility, LLC*, 64 F.4th 1311, 1317) (Fed. Cir. 2023) (affirming a district court's interpretation of "a microprocessor" as requiring at least one single microprocessor capable of performing all the functions recited in the claim)). The difference here, as we explained, is that the Specification discloses that a "filament" (singular) may comprise, for example, *one or*

[17] The right to seek a certificate of correction for minor errors in patents is set forth under statute (35 U.S.C. § 255) and rule (37 C.F.R. § 1.323), yet it is not apparent that Patent Owner has ever pursued such a certificate for the alleged "typographical" error here.

Imperative EX1017

more filaments and these sub-filaments together can *collectively* comprise first and second ends of a filament, such as depicted in Figures 8 and 9. Based on the intrinsic evidence, we see no basis at this stage to depart from the general rule of interpretation as applied to the claims here—"a filament" as recited encompasses one or more filaments. *Baldwin Graphic Sys., Inc. v. Siebert, Inc.*, 512 F.3d 1338, 1342–43 (Fed. Cir. 2008) (explaining, "[a]n exception to the general rule that 'a' . . . means more than one only arises where the language of the claims themselves, the specification, or the prosecution history necessitate a departure from the rule").

2. Claim 10

Petitioner contends that claim 10 would have been obvious over Garrison and Schaffer. Pet. 78–84. Petitioner's contentions rely on a similar mapping as discussed above for claim 1. *Id.* (citing analysis for claim 1 and dependent claim 3, Ex. 1003 ¶¶ 151, 189–202).

We are, nevertheless, unpersuaded that Petitioner is reasonably likely to prevail on its assertion that claim 10 would have been obvious over Garrison and Schaffer. Claim 10 expressly recites that the filament is "formed in a loop around the tubular sidewall" and that the "diameter of the loop" reduces when the end of the filament is pulled. As Patent Owner argues, "when the '005 Patent uses the term 'loop,' the term does not refer to multiple U-shaped filaments." Prelim. Resp. 36–37 (arguing, *inter alia*, that the '005 patent uses the term "loop" exclusively for the embodiments of Figures 6 and 7 (depicting use of filaments forming one or multiple loops), compared to a "different arrangement" involving multiple U-shaped filaments or bights like shown in Figures 8 and 9). And, as discussed above (*supra* Section III.C.), such a filament forming a loop as claimed requires flexibility. Because Petitioner has not established that the combination of

Imperative EX1017

Schaffer and Garrison teaches or suggests a flexible filament, Petitioner does not persuade us that the Ground 1 challenge to claim 10 is likely to succeed.

3. Conclusion

For the reasons discussed above, based on this preliminary record, we determine that Petitioner has shown sufficiently that it is reasonably likely to prevail on its Ground 1 challenge to claim 1, but not claim 10.

F. Obviousness over Garrison, Schaffer, and Hartley (Ground 2) or Garrison, Schaffer, and Eller (Ground 3)

Petitioner argues that claims 1–15 would have been obvious over the combinations of Garrison, Schaffer, and Hartley (Ground 2), or Garrison, Schaffer, and Eller (Ground 3). Pet. 21–61 (allegations related to claim 1), 61–88 (remaining claims). The analysis below focuses on Petitioner's challenge to claim 1 as illustrative. The discussion above about whether the claims require a "flexible" filament is not decisive because there is no dispute that both Hartley and Eller disclose flexible filaments that form a "loop" in Petitioner's proposed combination of the art. *See, e.g.*, Pet. 49–55 (discussing Hartley's teaching of, *inter alia*, a flexible string and looping such string around a central lumen to form an effective seal), 55–60 (same with respect to Eller's flexible wire).

The challenge to claim 1 under Grounds 2 and 3 is similar to the challenge to claim 1 under Ground 1, except that Petitioner argues that it would have been obvious to substitute the U-shaped actuating members of Schaffer with the flexible string of Hartley or flexible wire member of Eller to meet the "filament" as claimed. Below we focus primarily on the Garrison, Shaffer, Hartley combination because the parties' arguments under Grounds 2 and 3 substantially overlap at this stage.

Imperative EX1017

For Ground 2, Petitioner contends that a skilled artisan would have found it obvious to substitute Hartley's string for Schaffer's actuating members, arguing, *inter alia*, that such modification entails substitution of one known element (Hartley's string) for another (Schaffer's actuating members) to yield the predictable result of constricting Schaffer's valve to form a seal. Pet. 50–55. According to Petitioner, a skilled artisan would have recognized that Hartley's string "may seal more effectively across a wider range of diameters and shapes for the inserted devices than Schaffer's U-shaped actuating members." *Id.* at 51 (citing Ex. 1003 ¶¶ 123–124). Petitioner contends that, depending on the diameter and shape of the inserted device/tool, "Schaffer's actuating members may form small gaps between the valve's seal module and the tool's outer surface." *Id.* (depicting alleged "gaps" and arguing "Hartley's string would not suffer from this potential issue because the string more precisely conforms to the tool diameters"); *see also* Ex. 1006 ¶ 37 (teaching that Hartley's string can "close over a range of diameters of devices passed through the valve or can close completely down to be self-sealing"); Ex. 1003 ¶ 124); *see also id.* at 52 (arguing a "finite number of materials to select from to constrict a tubular member in a hemostasis valve in 2018" (citing Ex. 1003 ¶ 126)).

The image below illustrates Petitioner's proposed combination of Schaffer and Hartley.

Demonstrative Illustration
Schaffer + Hartley's String

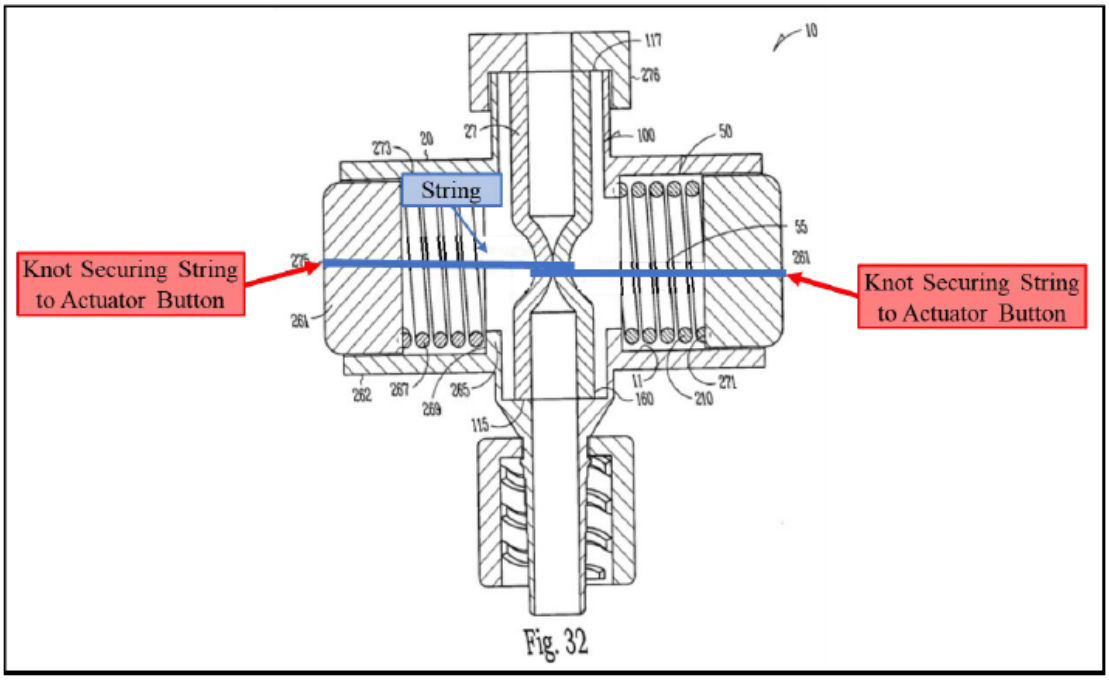

Pet. 52–53. The above image is a demonstrative that shows Schaffer's valve (from Schaffer's Figure 32) modified to substitute the actuating members for Hartley's flexible string (blue highlight), which loops around the outer wall of a portion of seal module 100. *Id.* (citing Ex. 1003 ¶¶ 128–132; Ex. 1006 ¶ 31). Petitioner contends that, by a simple technique taught in Hartley, the string may be secured at the string's ends (e.g., by knots) to the respective actuator buttons of Schaffer (red highlights). *Id.*

Petitioner argues the skilled artisan would have reasonably expected success with the proposed modification. Petitioner contends, for example, that Hartley's string would function in a similar way to Schaffer's actuating members—collapsing the central lumen when the string is pulled in opposing directions and, when the buttons are pressed, the released tension

loosens the string so the lumen can reopen. *Id.* at 52–55 (citing, e.g., Ex. 1005 ¶¶ 54, 77, 81; Ex. 1006 ¶¶ 31, 34, 37; Ex. 1003 ¶¶ 127–132 (testifying, *inter alia*, a POSA would reasonably have expected Schaffer's seal module would have the resilience needed to return to an open configuration when tension on the string is released and a constricting force is no longer applied, and, if necessary, that it would have been obvious to select components that provide appropriate resiliency)).

We find Petitioner's argument and evidence summarized above sufficient, at this stage, to support the rationale for modifying Schaffer's valve in view of Hartley as proposed, and to explain where each of claim 1's limitations is taught or suggested in the combination of Garrison, Schaffer, and Hartley. We address Patent Owner's counterarguments below.

Patent Owner argues Petitioner's proposed combination involves no simple substitution, and that none of Garrison, Schaffer, Hartley, and Eller disclose a single filament having ends extending in different directions that are coupled to different members of an actuator. Prelim. Resp. 43–49. According to Patent Owner, Schaffer's actuating members are each attached to separate buttons, Hartley's string is attached to a single actuator, and Eller's wire is attached to a housing at one end and an actuator at the other. *Id.* (citing, e.g., Ex. 1005, Fig. 31; Ex. 1006, Fig. 3; Ex. 1007, Fig. 20). Thus, Patent Owner argues, the asserted references do not disclose "any [single] element" that is attached to separate actuators. *Id.* at 47–49 (arguing Petitioner's modification adds complexity) (citing Ex. 2001 ¶¶ 123–126).

This argument is unavailing on the present record. Patent Owner's argument invokes an obviousness standard that is stricter than what the law requires. "The question is not whether the prior art disclosed the very thing claimed; it is whether, in light of the prior art, the claimed invention would

Imperative EX1017

have nonetheless been *obvious* to a person of ordinary skill in the art as of the relevant date." *Masimo Corp. v. Apple Inc.*, No. 2022-1894, 2024 WL 111647 at * 3 (Fed. Cir. Jan. 10, 2024) (explaining, "it suffices . . . 'that a person of ordinary skill in the art would have been motivated to combine the prior art in a way such that the combination discloses the claim limitation'") (quoting *Fleming v. Cirrus Design Corp.*, 28 F.4th 1214, 1222 (Fed. Cir. 2022)). Schaffer's two actuating members apply a constricting force to the valve's seal module when pulled by opposing spring-actuated buttons; replacing those members with a single string (or wire) would provide substantially the same function and meet the claim language. That is also similar to the constricting function Hartley's string (or Eller's wire) provides in those references—even if attached in preferred embodiments to the valve in somewhat different ways that allow the string/wire to be pulled at its ends and placed under tension.[18] And, at this stage, Petitioner's evidence supports a determination that a POSA would have regarded the proposed change as involving a relatively straightforward substitution of a known, alternative feature for constricting a hemostasis valve lumen.[19]

Patent Owner argues that a POSA would not have been motivated to substitute Hartley's string for Schaffer's U-shaped actuating members.

---

[18] Reflecting the skilled artisan's knowledge and design capabilities, Eller, for example, indicates that a flexible constricting wire can be attached to an actuator or housing by a variety of techniques (e.g., adhesives, welding, fusing, friction fit) and that its teachings can be applied to "any suitable actuator" (e.g., rotatable, linear, slidable, etc.). Ex. 1007, 8:27–44, 14:37–53; *see also* Ex. 1006 ¶ 31 (attachment via knots).

[19] "[T]he fact that it would take some creativity to carry out the combination does not defeat a finding of obviousness." *Facebook, Inc. v. Windy City Innovations, LLC*, 973 F.3d 1321, 1343 (Fed. Cir. 2020).

Prelim. Resp. 49–66. Whether a skilled artisan would have been motivated to combine the art's teachings with a reasonable expectation of success in arriving at the claimed subject matter is a highly fact-intensive inquiry. *Alza Corp. v. Mylan Labs., Inc*., 464 F.3d 1286, 1289 (Fed. Cir. 2006) ("The presence or absence of a motivation to combine references in an obviousness determination is a pure question of fact"); *Par Pharm., Inc. v. TWi Pharma., Inc.*, 773 F.3d 1186, 1196 (Fed. Cir. 2014) ("The presence or absence of a reasonable expectation of success is also a question of fact[.]"). The motivation issues raised by Patent Owner, for which we provide our preliminary views below, are better resolved on a complete trial record.

Patent Owner argues that Petitioner concocts a reason to substitute Hartley's string for Schaffer's U-shaped actuating members when no such reason exists. Prelim. Resp. 49–56. According to Patent Owner, Schaffer discloses (and Petitioner allegedly admits) that Schaffer's *unmodified* valve provides a "complete" and "gapless" seal that can prevent leaks. *Id.* (citing, e.g., Ex. 1005 ¶¶ 59, 68, Figs. 16–19; Ex. 1003 ¶¶ 96, 101). So, Patent Owner contends, there is no problem to be solved by swapping Schaffer's actuating members for Hartley's string and, thus, no motivation for the skilled artisan to make that change. *Id.*

Patent Owner's argument about an alleged absence of any reason to modify the prior art is unavailing at this time. Petitioner argues that Hartley's flexible string would provide a more fluid-tight seal around irregularly-shaped tools compared to Schaffer's allegedly rigid actuating members because, when constricting, this string can more dynamically and precisely adjust to the outer contours of inserted tools. Pet. 50–52 (Ex. 1006 ¶ 37; Ex. 1003 ¶¶ 123–124). Although Schaffer does disclose, for example, a use of certain materials for portions of a seal module that provide "a nearly

fluid/gas tight seal" and "exhibit[] a 'selfclosing' nature," those disclosures concern only *some embodiments*, using *optional* features. *See, e.g.*, Ex. 1005 ¶¶ 59 (teaching, "[i]n one embodiment," a seal module may include a "third central seal member" that, in an "option," "is extremely soft and compliant and intrinsically 'sticky'" such that it can be compared to "a gelatinous substance" that "sticks occlusively to itself" and, thus, is "selfclosing"), 69 (disclosing, in one embodiment, use of a third central seal member made of a material "so compliant" it can seal around irregularly-shaped instruments).

The valve of Schaffer's Figures 30–34 does not require a seal module that includes the above-described optional third seal member with an extremely compliant, soft, gelatinous, self-closing material. Ex. 1005 ¶ 75 ("The seal module 100 [of the embodiment of the valve shown in Figs. 30–34] is formed of one or more seal members" and "[i]n another option, the seal module 100 and/or any of its respective seal members can be formed of one or more materials.").[20] On this record, Schaffer's broader teachings support Petitioner's position that substituting a flexible string may provide a sealing benefit in the modified valve. *Merck & Co., Inc. v. Biocraft Labs., Inc.*, 874 F.2d 804, 807 (Fed. Cir. 1989) ("[I]n a section 103 inquiry, the fact that a specific [embodiment] is taught to be preferred is not controlling, since all disclosures of the prior art, including unpreferred embodiments,

[20] Petitioner's declarant Mr. Thornton testifies that the portions of Schaffer referenced by Patent Owner "refers to embodiments of the valve having three portions where one of the portions can optionally be made" from the sticky substance, yet Schaffer discloses many other materials that could make up the seal module (e.g., modified vinyl, silicone) that would not have such characteristics. Ex. 1003 ¶ 124; Ex. 1005 ¶ 59.

must be considered.") (internal quotation marks omitted); *Belden Inc. v. Berk-Tek LLC*, 805 F.3d 1064, 1076 (Fed. Cir. 2015) (holding the prior art "must be considered for everything it *teaches* by way of technology and is not limited to the particular *invention* it is describing and attempting to protect.") (internal quotation marks omitted).

Patent Owner contends Petitioner's "proposed combination could actually seal ***less effectively*** around multiple instruments," such as if "two circular instruments were inserted side-by-side through Schaffer's seal module." Prelim. Resp. 54–55 (arguing Hartley's flexible string "might be unable to seal the space (e.g., gaps/divots) between the [two] instruments"); Ex. 2001 ¶ 134. Patent Owner provides no authority that supports the notion that obviousness arises only when a modification of the prior art yields a device that is superior in each hypothetical scenario in which that device might be used. The combination or modification need only be a suitable option. *Intel Corp. v. Qualcomm Inc.*, 21 F.4th 784, 800 (Fed. Cir. 2021) ("[It is] not necessary to show that a combination is the *best* option, only that it be a *suitable* option.") (internal quotation marks omitted).[21]

Patent Owner argues that substituting Hartley's string for Schaffer's U-shaped actuating members would prevent "forcible disengagement" and, thus, change Schaffer's principle of operation. Prelim. Resp. 56–58 (citing Ex. 2001 ¶¶ 165–167). Patent Owner cites a teaching in Schaffer that, by

---

[21] Patent Owner's suggestion that a flexible filament would be unable to provide a suitable seal around multiple instruments inserted simultaneously is also at odds with the disclosure of the '005 patent. *See* Ex. 1017 ¶ 6 ("Through the use of the tensioning mechanism and filament to constrict, collapse, and/or seal the tubular member, the valve can seal around a wide range of tool sizes and shapes, *as well as multiple tools of differing sizes simultaneously*.") (emphasis added).

pressing the spring-actuated buttons, "such movement allows each engaging actuating member 55 to forcibly disengage opposing outer walls 27 of the seal module 100 allowing the portion 108 of the containment structure 160 to retract to an uncollapsed configuration where gases and fluids can pass therethrough." *Id.* (citing Ex. 1005 ¶ 80). With Petitioner's modification, Patent Owner argues, Hartley's string "would never disengage—let alone forcibly disengage—Schaffer's seal module." *Id.* (citing Ex. 2001 ¶ 166).

We are unpersuaded at this stage that Schaffer's "principle of operation" is altered in a manner that undercuts the alleged obviousness of claim 1. The operation and purpose is (at least arguably) materially unchanged in the modified Schaffer valve. Schaffer's valve, modified to include a flexible string, selectively opens and closes a central lumen via the actuation of buttons and by application of force and constriction, much like the unmodified Schaffer valve. That is true even if we accept that Hartley's string would remain in partial contact with the outer wall of the seal module when the buttons are pressed (albeit not under tension that would otherwise constrict the valve). Schaffer includes examples where the actuating members may "forcibly disengage" the seal module, "allowing" the seal module to "retract to an uncollapsed configuration where gases and fluids can pass therethrough." Ex. 1005 ¶¶ 77, 80. But Mr. Thornton testifies the release of the tension/force on a flexible string in the proposed modification gives the same result—with the seal module passively returning to an open configuration. Ex. 1003 ¶¶ 125–132. Schaffer more broadly teaches that the seal member may be sized and configured to maintain an open lumen when no compressive force is applied (Ex. 1005 ¶ 54), and we do not see how that requires "forcible disengagement," as interpreted by Patent Owner. Thus,

we question whether Patent Owner is highlighting a structural distinction that confers no material difference in the operation or purpose of the valve.

Further to Patent Owner's argument that Petitioner's proposed modification would prevent forcible disengagement, Patent Owner contends the modification would "render[] Schaffer's valve inoperable by inhibiting movement of the seal module" from the closed to the open position. Prelim. Resp. 58. More specifically, Patent Owner contends "the seal module would stick to and retain Hartley's string or Eller's wire in the closed position." *Id.*

We disagree. First, this argument suggests Schaffer's valve must include a third central seal member comprising a sticky, gelatinous material. That is an *optional* feature, as we discussed above. Second, the argument is premised on Hartley's string looping around and being in direct contact with the (optional) sticky material. But that premise lacks support and does not account for Schaffer's teaching that the seal module includes a collapsible "tubular containment structure 160" that contains and surrounds the seal member materials. *See, e.g.*, Ex. 1008 ¶¶ 58, 60, 63, 77, Figs. 12–13, 16 (depicting tubular containment structure 160 surrounding third central seal member 165), 32, 34 (depicting containment structure 160, which appears to be the portion of the seal module100 in direct contact with actuating members 55). Even if a "sticky" third seal member material were required in Schaffer's valves, we see no basis to find that Schaffer's actuating members—or a substituted string of Hartley—must directly contact that sticky material instead of the tubular containment structure surrounding it.

Patent Owner next argues that Petitioner's proposed modification would compromise the durability of the valve and make it harder to manufacture and assemble it. Prelim. Resp. 58–62. For example, Patent Owner argues that Schaffer's U-shaped actuating members are rigid and can

be made by machining, which provides for a simpler way of assembling the valve where the seal module can be inserted into the housing and through a gap between the rigid actuating members while the respective buttons are pushed. *Id.* (citing, e.g., Ex. 1005 ¶¶ 82–83; Ex. 2001 ¶¶ 157–162 (testifying that substituting Hartley's string as proposed would make this assembly method impossible or unduly complicated)). Thus, Patent Owner, argues, Petitioner's proposed change to the valve of Schaffer undermines the valve's intended function and principle of operation. *Id.* at 58–63.

Patent Owner's arguments do not, on this record, undercut Petitioner's showing needed to meet the standard at institution. The methods cited by Patent Owner appear to relate to examples or optional techniques in Schaffer for making the valve. *See, e.g.*, Ex. 1005 ¶¶ 81–83. Petitioner also provides testimony from Mr. Thornton that a skilled artisan would have been aware of various ways to assemble the modified valve, such as using a "tapered fixture" to introduce a seal module through looped strings. Ex. 1003 ¶ 125. During trial, the parties may develop additional evidence and argument about the importance of the manufacturing and assembly techniques cited by Patent Owner, and whether those techniques are incompatible with Petitioner's proposed modification to such an extent that a POSA, through the exercise of ordinary skill, could not address such concerns. *In re ICON Health & Fitness, Inc.*, 496 F.3d 1374, 1382 (Fed. Cir. 2007) (explaining that arguments of inoperability must not "ignore the modifications that one skilled in the art would make to a device borrowed from the prior art").[22]

---

[22] If there may be downsides to Petitioner's proposed combination as argued by Patent Owner, the parties may consider developing further evidence relevant to weighing the overall benefits gained and lost. *Allied Erecting and Dismantling Co. v. Genesis Attachments, LLC*, 825 F.3d 1373, 1381

Lastly, Patent Owner argues that, even if there was a need for a better seal or avoidance of gaps in Schaffer's valve, Petitioner does not explain why the POSA would not have pursued "simple modifications" versus a "complete redesign." Prelim. Resp. 63–65. Patent Owner argues that a POSA could have adjusted the resilience or compressibility of the sealing module materials, or adjusted the spring strength to apply additional force. *Id.* (citing Pet. 69). Patent Owner relatedly argues that Garrison itself describes rotatable/passive hemostasis valves that were "easy-to-use," "readily available," and effective, so a "POSA would simply have used Garrison's rotatable/passive hemostasis valve" rather than substituting an allegedly "ineffective" valve of Schaffer that requires a redesign to include Hartley's string. *Id.* at 65–66.

Patent Owner's argument is, at this stage, unavailing. The argument presumes the obviousness inquiry ends at a problem's simplest solution. A petitioner need not show a motivation to pursue only a best or most obvious solution. *In re Fulton*, 391 F.3d 1195, 1200 (Fed. Cir. 2004) ("[O]ur case law does not require that a particular combination must be the preferred, or the most desirable, combination described in the prior art in order to provide motivation for the current invention."); *Intel*, 21 F.4th at 800. We are not as yet persuaded that Petitioner's proposed modification would be considered unsuitable, or that it materially changes the principle of operation of Schaffer's valve or renders it inoperable for its purpose. Petitioner never

---

(Fed. Cir. 2016) ("Although modification of the movable blades may impede the quick change functionality disclosed by [the asserted prior art], '[a] given course of action often has simultaneous advantages and disadvantages, and this does not necessarily obviate motivation to combine'" (quoting *Medichem, S.A. v. Rolabo, S.L.*, 437 F.3d 1157, 1165 (Fed. Cir. 2006) (citation omitted)).

argued Schaffer's unmodified valve is "ineffective" but instead proposed that a POSA would have recognized that such a valve may be further modified, with potential improvement, by adding Hartley's string. Pet. 50–55. And Schaffer itself suggests that its valves have advantages over Tuohy-Borst valves like disclosed in Garrison, giving a reason for the POSA to have looked beyond Garrison's teachings. *See, e.g.*, Ex. 1005 ¶ 5 (noting "manual operation of existing valves most often requires a twisting motion or a squeezing motion . . . [and often] requires the use of both hands").

Based on this preliminary record, we determine there is a reasonable likelihood that Petitioner will prevail in showing that at least claim 1 is unpatentable under Grounds 2 and 3.

G. Obviousness over Garrison, Hartley, and Eller (Ground 4)

Petitioner contends that claims 1–3, 5, 6, and 9–15 would have been obvious over a combination of Garrison, Hartley, and Eller. Pet. 88–107; Ex. 1003 ¶¶ 210–273. As part of this challenge, Petitioner's proposes modification of Hartley's rotatable hemostasis valve to include a "biasing system," which Petitioner contends is disclosed by Eller and would have been obvious to add to the valve of Hartley to ensure a quick seal during surgical procedures. Pet. 93–97 (arguing, *inter alia*, this modification would simplify operation of Hartley's valve and eliminate the need to manually seal the valve during procedures).

We are unpersuaded that Petitioner is reasonably likely to prevail on its challenge to claim 1 (or the claims that depend from claim 1) under Ground 4. We agree with Patent Owner that Petitioner has not established that the modification of Hartley in view of Eller includes an actuator with a "first member" and a "second member" as claimed. Prelim. Resp. 67–68. The alleged "first member" and "second member" cited by Petitioner

Imperative EX1017

(Pet. 91) are simply portions of a single, unitary rotary actuator in Hartley. Ex. 2001 ¶¶ 178–179 (citing, e.g., Ex. 1006, Fig. 3 (single rotary actuator 12)). We made the same determination in IPR2024-01157, Paper 7 at 42.

Independent claim 10 does not require that the actuator comprise a "first member" *and* a "second member," so the deficiency in Petitioner's showing noted above for claim 1 does not apply.[23] *See supra* Section II.D. (claim 10 reciting, in part, "an actuator having at least a first member coupled to the support").

Patent Owner additionally argues that a POSA would not have been motivated to combine Garrison, Hartley, and Eller as proposed. Prelim. Resp. 68–72. According to Patent Owner, Hartley discloses a valve that includes a "ball and detent system" and adding Eller's torsion spring as the alleged biasing system "would override the ball and detent system and eliminate Hartley's ability to selectively maintain various opening sizes for the lumen—acting to always seal the valve." *Id.* at 71 (citing Ex. 1006 ¶¶ 15, 18, 33; Ex. 2001 ¶ 185).

We will revisit this issue if needed on a fully-developed record. We preliminarily agree that adding a torsion spring to bias Hartley's valve to a closed position would seem to override the disclosed ball and detent system. It appears, however, that Hartley's ball and detent system may not be a required feature. *See, e.g.*, Ex. 1005 ¶ 18 ("The rotary actuator *may have* a tactile indication of its action by means of a ball or other device acting into detents . . . .") (emphasis added).

---

[23] Claims 11–15, which depend directly or indirectly from claim 10 do, however, require an actuator with both a "first member" and a "second member." Ex. 1001, 37:14–32.

IV. CONCLUSION

Based on this preliminary record, we determine that Petitioner has shown a reasonable likelihood that it will prevail with respect to at least one of the claims challenged in the Petition. We institute trial on all challenged claims under the grounds raised in the Petition. *PGS Geophysical AS v. Iancu*, 891 F.3d 1354, 1360 (Fed. Cir. 2018) (explaining that institution of *inter partes* review "require[s] a simple yes-or-no institution choice . . . embracing all challenges included in the petition"); 37 C.F.R. § 42.108(a).

Any argument not raised in a Patent Owner Response to the Petition, or as permitted in another manner during trial, shall be deemed forfeited and/or waived even if asserted in the Preliminary Response. *In re Google Tech. Holdings LLC*, 980 F.3d 858, 862–864 (Fed. Cir. 2020) (holding an argument forfeited when not timely raised before the Board); *In re NuVasive, Inc.*, 842 F.3d 1376, 1380–81 (Fed. Cir. 2016) (holding Patent Owner waived an argument addressed in the Preliminary Response by not raising the same argument in the Patent Owner Response).

V. ORDER

In consideration of the foregoing, it is hereby:

ORDERED that, pursuant to 35 U.S.C. § 314(a), *inter partes* review of all challenged claims of the '005 patent is instituted on the grounds of unpatentability set forth in the Petition; and

FURTHER ORDERED that, pursuant to 35 U.S.C. § 314(a) and 37 C.F.R. § 42.4, notice is given of institution of trial commencing on the entry date of this Decision.

FOR PETITIONER:

Joshua J. Stowell
Joseph R. Re
Brian C. Barnes
KNOBBE, MARTENS, OLSON & BEAR, LLP
Joshua.Stowell@knobbe.com
Joe.Re@knobbe.com
Brian.Barnes@knobbe.com

FOR PATENT OWNER:

Joseph Hamilton
Paul Parker
PERKINS COIE LLP
hamilton-ptab@perkinscoie.com
parker-ptab@perkinscoie.com