UNITED STATES PATENT AND TRADEMARK OFFICE

BEFORE THE PATENT TRIAL AND APPEAL BOARD

IMPERATIVE CARE, INC.,
Petitioner,

v.

INARI MEDICAL, INC.,
Patent Owner.

Case No. IPR2025-00728
U.S. Patent No. 11,844,921

PATENT OWNER'S PRELIMINARY RESPONSE

Imperative Care v. Inari Medical
IPR2024-01157
Imperative Care Ex. 1022

TABLE OF CONTENTS

EXHIBIT LIST vi

I. INTRODUCTION 1

II. BACKGROUND 7

A. Overview of the '921 Patent 7

B. Claims 9

C. Prosecution History 9

D. Person of Ordinary Skill in the Art (POSA) 10

E. Claim Construction: "Filament" 12

1. Claim language 14

2. The specification 15

3. Prosecution history 20

4. Extrinsic evidence 25

5. A POSA would understand the degree of flexibility of the "filament." 26

6. Conclusion 27

III. THE CLAIMS ARE NOT ANTICIPATED BY SCHAFFER (GROUND 1) 28

A. Schaffer Fails to Disclose a "Filament" Under Patent Owner's Construction 29

B. Schaffer Also Fails to Disclose a "Filament" Under Petitioner's Construction 31

IV. THE CLAIMS ARE NOT OBVIOUS OVER SCHAFFER ALONE (GROUND 2) 34

V. THE CLAIMS ARE NOT OBVIOUS OVER SCHAFFER IN VIEW OF HARTLEY (GROUND 3) OR ELLER (GROUND 4) 35

A. A POSA Would Not Have Been Motivated to Substitute Hartley's String/Eller's Wire for Schaffer's Actuating Members 36

1. Petitioner's stated motivation to combine Schaffer with Hartley/Eller does not exist. 36

2. Petitioner's alleged defect in Schaffer would only exist after first modifying Schaffer to create an inferior valve—but even this would fail to motivate a POSA to substitute Hartley's string or Eller's wire. 43

B. Petitioner's Proposed Modification Including Hartley's String/Eller's Wire Is Not a Simple Substitution 47

1. An actuating member including two ends attached to and controlled by different actuators was not "known" in the art. 48

2. A POSA would understand that Schaffer discloses other more plausible substitutions/modifications to address any purported sealing issues. 54

3. Petitioner's proposed substitution would also not yield the alleged predictable results of sealing Schaffer's valve. 58

C. Petitioner Fails to Establish that the Solutions for Constricting a Tubular Member in a Hemostasis Valve Were Finite, Identifiable, or Known 61

D. Petitioner's Proposed Modifications Would Change Schaffer's Principles of Operation. 63

1. Substituting Hartley's string/Eller's wire for Schaffer's actuating members would prevent forcible disengagement. 64

2. Substituting Hartley's string/Eller's wire for Schaffer's actuating members would compromise the ease of manufacturing and durability of Schaffer's valve. 65

VI. THE CLAIMS ARE NOT OBVIOUS OVER HARTLEY IN VIEW OF ELLER (GROUND 5) 69

VII. CONCLUSION.....73

TABLE OF AUTHORITIES

CASES

Abbott Labs. v. Sandoz, Inc.,
544 F.3d 1341 (Fed. Cir. 2008) 61

Adidas AG v. Nike, Inc.,
963 F.3d 1355 (Fed. Cir. 2020) 63

Aruba Networks, Inc. v. Xr Commc'ns LLC,
No. IPR2018-00701, 2018 WL 4090629 (P.T.A.B. Aug. 27, 2018).....42

Aug. Tech. Corp. v. Camtek, Ltd.,
655 F.3d 1278 (Fed. Cir. 2011) 34

Axonics, Inc. v. Medtronic, Inc.,
73 F.4th 950 (Fed. Cir. 2023) 36, 37

Hill-Rom Services, Inc. v. Stryker Corp.,
755 F. 3d 1367 (Fed. Cir. 2014) 13

In re Chudik,
851 F.3d 1365 (Fed. Cir. 2017) 32, 33

In re Schweickert,
676 F. App'x 988 (Fed. Cir. 2017) 42

Innogenetics, N.V. v. Abbott Labs.,
512 F.3d 1363 (Fed. Cir. 2008) 36

Intel Corp. v. Qualcomm Inc.,
21 F.4th 784 (Fed. Cir. 2021).....46, 47, 59

Kingston Tech. Co., Inc. v. Polaris Innovations Ltd.,
No. IPR2016-01623, 2018 WL 851884 (P.T.A.B. Feb. 9, 2018).....61

KSR Int'l Co. v. Teleflex Inc.,
550 U.S. 398 (2007).....47, 61

Kyocera Senco Indus. Tools Inc. v. Int'l Trade Comm'n,
22 F.4th 1369 (Fed. Cir. 2022) 13

Philip Morris Prods. S.A. v. RAI Strategic Holdings, Inc.,
No. 2022-1846, 2023 WL 5970786 (Fed. Cir. Sept. 14, 2023).....44, 46, 47, 54

Philip Morris Products S.A. v. RAI Strategic Holdings, Inc.,
IPR2020-01602, 2022 WL 1022576 (P.T.A.B. Mar. 30, 2022).....44

Plas-Pak Indus. V. Sulzer MixPak
AG, 600 Fed.App'x. 755 (Fed. Cir. 2015) 63

R.J. Reynolds Vapor Co. v. Fontem Holdings 1 B.V.,
IPR2016-01268, Paper 63 (P.T.A.B. Dec. 19, 2017) 54

Rolls–Royce, PLC v. United Techs. Corp.,
603 F.3d 1325 (Fed. Cir. 2010) 61

SRI Int'l, Inc. v. Cisco Sys., Inc.,
930 F.3d 1295 (Fed. Cir. 2019) 32

Virtek Vision Int'l v. Assembly Guidance Sys.,
97 F.4th (Fed. Cir. 2024) 53

OTHER AUTHORITIES

Merriam-Webster's Collegiate Dictionary 25

New Oxford American Dictionary.....25, 26, 27

EXHIBIT LIST

	Petitioner's Exhibits
Exhibit	**Description**
1001	U.S. Patent No. 11,844,921 ("the '921 patent")
1002	'921 Patent Prosecution History Excerpt
1003	Expert Declaration of Troy Thornton
1004	Resume of Troy Thornton
1005	U.S. Patent Publication US 2003/0225379 A1 to Schaffer et al. ("Schaffer")
1006	U.S. Patent Publication US 2003/0116731 A1 to Hartley ("Hartley")
1007	U.S. Patent No. 9,980,813 B1 to Eller ("Eller")
1008	Certified File History of U.S. Patent Application 10/371,190 (Schaffer File History)
1009	U.S. Patent No. 5,429,616 to Schaffer ("Schaffer '616")
1010	U.S. Patent No. 3,438,607 to Williams et al.
1011	U.S. Patent Publication US 2015/0173782 A1 to Garrison et al. ("Garrison")
1012	U.S. Patent No. 11,697,011 ("the '011 patent")
1013	Inari's Supplemental Infringement Contentions (without claim charts) from *Inari Medical, Inc. v. Imperative Care, Inc.,* No. 24-cv-3117 (N.D. Cal.) (served February 7, 2025).
1014	Google Dictionary Definition of "String"
1015	Cambridge Dictionary Definition of "String"
1016	U.S. Patent No. 12,109,384 B2 to Merritt et al.
1017	Decision Granting Institution of *Inter Partes* Review for U.S. Patent No. 11,697,011 (Paper 7) in *Imperative Care, Inc. v. Inari Medical, Inc.,* IPR2024-01157 (P.T.A.B. Jan. 23, 2025)

	Petitioner's Exhibits
Exhibit	**Description**
1018	PCT Patent Publication WO 2018/019829 A1 to Brady et al.
1019	Inari's Notice of Motion and Motion for Leave to File Third Amended Complaint (Dkt. #88) in *Inari Medical, Inc. v. Imperative Care, Inc.,* 24-cv-03117-EKL (N.D. Cal.) (filed March 5, 2025)
1020	U.S. Patent No. 6,776,770 B2 to Treretola
1021	Case Management & Scheduling Order (Dkt. #54) in *Inari Medical, Inc. v. Imperative Care, Inc.,* 24-cv-03117-EKL (N.D. Cal.) (issued December 19, 2024)

	Patent Owner's Exhibits
Exhibit	**Description**
2001	Complaint for Patent Infringement in *Inari Medical, Inc. v. Imperative Care, Inc.*, 5:24-cv-03117-EKL (N.D. Cal.), Dkt. 1
2002	First Amended Complaint for Patent Infringement in *Inari Medical, Inc. v. Imperative Care, Inc.*, 4:24-cv-03117-YGR (N.D. Cal.), Dkt. 20
2003	Second Amended Complaint for Patent Infringement in *Inari Medical, Inc. v. Imperative Care, Inc.*, 5:24-cv-03117-EKL (N.D. Cal.), Dkt. 68
2004	Third Amended Complaint for Patent Infringement in *Inari Medical, Inc. v. Imperative Care, Inc.*, 5:24-cv-03117-EKL (N.D. Cal.), Dkt. 112
2005	Imperative Care Inc.'s Notice of Motion and Motion to Stay Pending *Inter Partes* Review in *Inari Medical, Inc. v. Imperative Care, Inc.*, 5:24-cv-03117-EKL (N.D. Cal.), Dkt. 100
2006	Motion For Preliminary Injunction in *Inari Medical, Inc. v. Imperative Care, Inc.*, 5:24-cv-03117-EKL (N.D. Cal.), Dkt. 24
2007	Opposition to Motion for a Preliminary Injunction in *Inari Medical, Inc. v. Imperative Care, Inc.*, 5:24-cv-03117-EKL (N.D. Cal.), Dkt. 36
2008	Corrected Opposition to Motion for a Preliminary Injunction in *Inari Medical, Inc. v. Imperative Care, Inc.*, 5:24-cv-03117-EKL (N.D. Cal.), Dkt. 40
2009	Stipulated Protective Order in *Inari Medical, Inc. v. Imperative Care, Inc.*, 5:24-cv-03117-EKL (N.D. Cal.), Dkt. 76
2010	Joint Letter Brief Concerning Plaintiff's Motion to Compel Production of Materials Relating to Defendant's Blood Return System in *Inari Medical, Inc. v. Imperative Care, Inc.*, 5:24-cv-03117-EKL (N.D. Cal.), Dkt. 94
2011	Order Re Inari Medical's Motion to Compel Production of Materials in *Inari Medical, Inc. v. Imperative Care, Inc.*, 5:24-cv-03117-EKL (N.D. Cal.), Dkt. 105

	Patent Owner's Exhibits
Exhibit	**Description**
2012	Imperative Care, Inc.'s Preliminary Invalidity Contentions and Document Production Accompanying Invalidity Contentions Pursuant to Patent Local Rules 3-3 and 3-4 (omitting accompanying claim charts) in *Inari Medical, Inc. v. Imperative Care, Inc.*, 5:24-cv-03117-EKL (N.D. Cal.)
2013	Imperative Care, Inc.'s Preliminary Invalidity Contentions and Document Production Regarding U.S. Patent Nos. 12,109,384 and 12,156,669 Pursuant to Patent Local Rules 3-3 and 3-4 (omitting accompanying claim charts) in *Inari Medical, Inc. v. Imperative Care, Inc.*, 5:24-cv-03117-EKL (N.D. Cal.)
2014	Al-Salam Letter to Truvic (September 29, 2023)
2015	Declaration of Joseph P. Hamilton (April 28, 2025)
2016	Minute Entry for Proceedings Held Before Judge Eumi K Lee in *Inari Medical, Inc. v. Imperative Care, Inc.*, 5:24-cv-03117-EKL (N.D. Cal.), Dkt. 110
2017	Minute Entry for Proceedings Held Before Judge Eumi K Lee in *Inari Medical, Inc. v. Imperative Care, Inc.*, 5:24-cv-03117-EKL (N.D. Cal.), Dkt. 111
2018	U.S. Patent Publication US 2008/0087853 A1 to Kees ("Kees")
2019	U.S. Patent Publication US 2011/0144592 A1 to Wong et al. ("Wong")
2020	Notice of Allowance Issued in U.S. Patent Application No. 16/117,519 (January 27, 2021)
2021	Inari's Reply in Support of Motion for Preliminary Injunction in *Inari Medical, Inc. v. Imperative Care, Inc.*, 5:24-cv-03117-EKL (N.D. Cal.), Dkt. 46
2022	Inari's Report Regarding Claim Construction Schedule and Claim Narrowing in *Inari Medical, Inc. v. Imperative Care, Inc.*, 5:24-cv-03117-EKL (N.D. Cal.), Dkt. 116
2023	Imperative Care, Inc.'s Proposed Schedule for Claim Construction and Narrowing Asserted Patents and Claims in *Inari Medical, Inc. v. Imperative Care, Inc.*, 5:24-cv-03117-EKL (N.D. Cal.). Dkt. 117

	Patent Owner's Exhibits
Exhibit	**Description**
2024	Declaration of Paul J. Zalesky
2025	Merriam-Webster's Collegiate Dictionary (11th ed. 2014)
2026	New Oxford American Dictionary (3rd ed. 2010)
2027	U.S. Patent Application Publication No. 2018/0193043
2028	Deposition Transcript of Troy Thornton (September 30, 2024)
2029	U.S. Patent No. 7,682,380 to Thornton ("Thornton")
2030	Deposition Transcript of Troy Thornton (March 19, 2025)
2031	Deposition Transcript of Troy Thornton (June 25, 2025)
2032	Decision Granting Institution of *Inter Partes* Review for U.S. Patent No. 11,697,012 (Paper 6) in *Imperative Care, Inc. v. Inari Medical, Inc.,* IPR2025-00156 (P.T.A.B. Apr. 22, 2025)

I. INTRODUCTION

Petitioner has failed to demonstrate a reasonable likelihood that any of Claims 1-7, 9-10, 15-18, or 20-24 ("the Claims") of the '921 Patent are unpatentable. The '921 Patent discloses a "garrote valve" that "provides convenient, single-handed operation" that "allows the user to easily and quickly swap different tools being used through the valve without compromising hemostasis and therefore simplifying the procedure." EX1001, 5:52-58. This "garrote valve" design includes a filament, either in the form of a loop or a bight, that is flexible so that the filament can tighten to constrict and seal a tube in the valve and loosen to permit the tube to open and unseal the valve. EX2024, ¶¶41-44, 69-72. That is, the filament is capable of conforming to the shape of the tube as it constricts to provide a robust seal and, as it expands, loosening to allow the tube's lumen to open. *Id.* at ¶¶42, 69-70.

In accordance with that disclosure, Claim 1 recites a valve comprising, *inter alia*, an "active tensioning mechanism including an actuator coupled to [an] elongate member via a filament extending at least partially around the elongate member." The "actuator is moveable between (a) a first position wherein the lumen is constricted and sealed and (b) a second position wherein the lumen is at least partially open." Independent Claims 15 and 21 similarly recite, *inter alia*, a "filament coupled to [an] elongate member" and an "actuator [that] is moveable between (a) a first position … [wherein] the lumen is constricted and sealed and (b) a second position wherein the

lumen is at least partially open." In other words, the Claims recite a flexible "filament" that conforms to the valve's elongate member (e.g., a tube) when acted on by an actuator that tightens the filament in a first position to constrict the tube and loosens the filament in a second position to at least partially open the tube.

Petitioner's primary reference for Grounds 1–4, Schaffer, takes a different approach. Schaffer does not disclose, in name or concept, a garrote valve. Schaffer instead discloses applying compression with ***rigid*** actuating members that do not conform to the shape of the tube being compressed. Instead, to form a seal using nonconforming actuating members, Schaffer employs an internal "highly compliant third central seal member 165 [that] seals around a variety of profile shapes 192 and diameters 194 of the lumen 193"—including around both multiple instruments and irregularly-shaped instruments—as the rigid actuating members apply an external compressive force. EX1005, ¶[0060]; EX2024, ¶¶116-118. So, rather than an external filament capable of conforming to the outer shape of the tube as it constricts as described and claimed in the '921 Patent, Schaffer's fundamentally different approach relies on the highly-compliant seal member 165 that is part of the tube that directly conforms to the shape of any instruments inserted through the tube as the seal member is compressed by the nonconforming actuating members. And, as admitted by Petitioner's expert, every illustrated embodiment operates in that

manner, namely using internal seal member 165 to effectuate the seal. EX2031, 69:7–77:3.

That fundamentally different principle of operation found in Schaffer addresses a specific and different problem in the art. Specifically, Schaffer explains that for hemostasis valves, the "problems are complex" and require a "balance between closing force, opening force, friction, compression and durability." EX1005, ¶[0007]. Schaffer further explains that "if a valve is inordinately tight … it may not allow the insertion of soft, flexible instrumentation" or can damage "delicate" catheters. *Id*. To achieve that balance, Schaffer discloses a valve employing rigid nonconforming actuating members so that the amount of compression can be precisely controlled to open or close the valve. And then to effectuate a complete seal, the internal seal member forms a complete seal "under very light compression." *Id*. at ¶[0059]. Schaffer further discloses that other advantages to its design including that its rigid nonconforming actuating members also provide a more durable and easier to manufacture valve. EX2024, ¶¶149-160.

Here, Ground 1 fails because Petitioner has not demonstrated that Schaffer discloses a "filament" under either party's proposed claim construction. Under Patent owner's proposed construction, the term "filament" should be accorded its plain and ordinary meaning: "a thin, flexible length of material formed by one or more strands of material." Schaffer's nonconforming actuating members fail to

disclose a "filament" under that plain and ordinary meaning because they are rigid. *Id.* at ¶92. So, Petitioner proposes that the '921 Patent redefines "filament" contrary to the plain meaning to not require flexibility and instead to simply mean "at least 'one or more threads, lines, cords, ropes, ribbons, flat wires, sheets, or tapes'" (Petition, p.17), to then assert that Schaffer's U-shaped actuating members "***resemble***" a "ribbon, flat wire, sheet, or tape" (Petition, p.30; emphasis added). But even accepting Petitioner's assertion, "resembling" an express claim limitation, without more, is insufficient to anticipate that limitation. Ground 1 fails for that reason alone.

Grounds 2-4 fail because a POSA would not have been motivated to modify Schaffer to replace Schaffer's nonconforming actuating members with a filament, including a flexible string or wire as disclosed in Hartley and Eller, respectively, and then further modify that combination as claimed. EX2024, ¶113. Petitioner's purported motivation to combine ignores that Schaffer's valve forms a complete seal (as Petitioner admits) via the highly-compliant seal member 165 that is "so compliant that it forms a seal around … instruments 260 even if the instruments 260 are irregularly shaped." EX1005, ¶[0068]. Instead, Petitioner's purported motivation to combine relies on its expert's contradictory testimony that Schaffer's valve would form gaps despite Schaffer's express disclosure otherwise. Petition, pp.36, 43. As such, a POSA would not have redesigned Schaffer to address a non-existent problem

(gaps) particularly where the proposed modification is contrary to Schaffer's fundamental principle of operation, namely, using nonconforming compression members with an internal highly-compliant seal member. Indeed, Petitioner's expert (Mr. Thornton) admitted at deposition in an IPR for related U.S. Patent No. 11,697,011 ("the related '011 IPR") that if Schaffer forms a complete seal, there would be no need to modify Schaffer's U-shaped actuating members. EX2030, 116:18-117:2. In sum, Petitioner's proposed modifications to Schaffer either alone or in combination with Hartley or Eller employ impermissible hindsight—requiring a POSA to manufacture a non-existent problem with Schaffer (poor sealing), then modify Schaffer in view of that non-existent problem in a manner that fundamentally changes Schaffer's principle of operation.

Grounds 3-4 also fail because Petitioner's "simple substitution" rationale for obviousness does not involve the substitution of a "known element." Namely, a single actuating member (U-shaped member, string, or wire) having two ends coupled to and controlled by different actuators is not disclosed in any of Petitioner's references. Instead, each of Petitioner's references includes one or more actuating members each controlled alone by a single actuator. EX2024, ¶¶137-148. Additionally, Petitioner and its expert admit that there are comparably simpler substitutions based on Schaffer's disclosure that would fix any sealing issues, and those substitutions would not change Schaffer's principles of operation, e.g., simply

including the same third seal member actually disclosed in Schaffer. *Id*. at ¶¶163-165. Finally, Petitioner's proposed substitution would not predictably seal Schaffer's valve in the presence of multiple instruments or irregularly shaped instruments—scenarios for which Schaffer is intended to seal completely. *Id*. at ¶125; EX1005, ¶¶[0006], [0008], [0068].

Grounds 3-4 further fail because Petitioner's apparent "obvious to try" rationale fails to establish that there were a finite number of identifiable and known solutions for constricting a tubular member in a hemostasis valve in 2017. Petitioner's expert admitted during deposition in a related IPR for U.S. Patent No. 11,697,012 ("the related '012 IPR"): "I don't know how many options could be used to compress [a] tube." EX2031, 107:12-13.

And finally, Ground 5 fails because Petitioner's proposed modification to include Eller's torsion spring in Hartley's valve would change Hartley's principle of operation by rendering its ball-and-detent system inoperable for its purpose of retaining Hartley's rotary actuator in different positions corresponding to different valve positions (e.g., open, partially open). EX2024, ¶¶170-182.

For those and the other reasons set forth below, Petitioner has failed to demonstrate that any of the Claims are unpatentable under any of Grounds 1-5.

II. BACKGROUND

A. Overview of the '921 Patent

The '921 Patent explains that while "traditional hemostasis valves are greatly beneficial for intravascular access, they have some drawbacks. For example, some valves may not seal adequately for all interventional applications or tools, and/or the operation of some valves may be complicated for operator use." EX1001, 1:45-49. So, the '921 Patent discloses a hemostasis valve, "referred to as a garrote valve," that "can seal with or without a tool extending through the valve." EX1001, 5:50-52.[1] This hemostasis valve enables medical professionals to easily operate the valve while maintaining a robust seal to prevent blood loss during procedures, such as aspiration thrombectomy procedures with large bore catheters in large vessels for treating deep vein thrombosis or pulmonary embolism, in which ease of use and a robust seal are particularly important. EX2024, ¶¶33-36; EX1001, 1:58-2:7, 5:11-16, 5:52-67, 16:1-25.

To address those issues and provide those benefits, the '921 Patent's "garrote" valve includes a constricting mechanism with an actuator and at least one filament coupled to an elongated member. EX1001, 8:1-5. The actuator may be a manual

[1] Merriam-Webster defines "garrote" to mean "an implement (as a wire with a handle at each end) for strangulation." EX2025, p.516.

button enabling easy one-handed use to seal effectively when needed. *Id*. at 8:17-26. The filament is designed to constrict the elongated member to create a seal when the actuator is engaged, to ensure effective hemostasis during medical procedures. *Id*. at 9:18-22.

The actuator can be biased to a position where the valve is sealed. *Id*. at 8:32-34. In the first configuration, depicted in FIG. 2 below, the elongated member is collapsed/sealed, with buttons in an undepressed position. *Id*. at 8:34-40. Springs bias the buttons towards the first configuration. *Id*. at 8:40-47. This design ensures the mechanism remains in a sealed state absent actuation of the actuator based on the biasing force applied by the springs. *Id*. at 8:32-34.

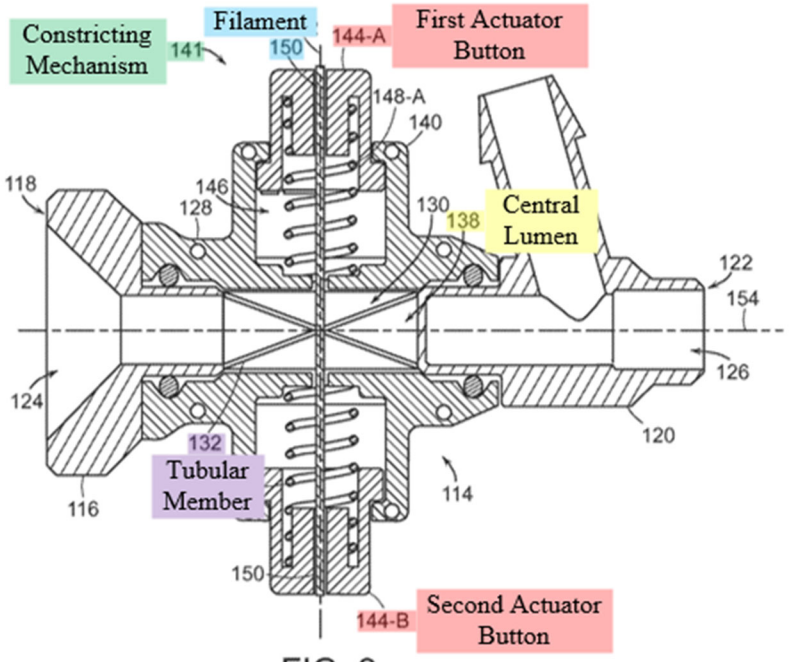

FIG. 2

EX2024, ¶38.

B. Claims

The Claims of the '921 Patent are directed to the disclosed innovative "garrote" hemostasis valves that enhance the sealing capability compared to prior art valves while simplifying operator use. EX2024, ¶¶33-36.

Specifically, the garrote of Claim 1 includes an "active tensioning mechanism including an actuator coupled to [an] elongate member via a filament extending at least partially around the elongate member." The "actuator is moveable between (a) a first position wherein the lumen is constricted and sealed and (b) a second position wherein the lumen is at least partially open." The garrote mechanisms of Claims 15 and 21 similarly include a "filament coupled to [an] elongate member" and an "actuator [that] is moveable between (a) a first position … [wherein] the lumen is constricted and sealed and (b) a second position wherein the lumen is at least partially open."

C. Prosecution History

The Examiner issued a Notice of Allowance on October 18, 2023, along with a List of References Cited by the Examiner. EX1002, pp.19-27, 29-30. The Notice of Allowance included an Examiner's Amendment amending what became Claim 21 to add a "biasing member configured to bias the actuator to the first position". *Id.* at p.24.

The Examiner listed 16 references in the List of References Cited that they specifically analyzed before allowing the claims. *Id*. at pp.29-30. Those references appear on the face of the '921 Patent with an "*"and include Petitioner's asserted references Hartley (EX1006) and Eller (EX1007), as well as Wong (EX2019), Kees (EX2018), and Williams (EX1010)—references which, like Schaffer, include one or more rigid actuating members biased to collapse/seal a tube.

The Examiner found that the "closet prior art of record is [Hartley and Williams,] however these references do not disclose the device as claimed or described." EX1002, p.25. The Examiner concluded that Hartley "fails to disclose a biasing member configured to bias the actuator to the first position" and Williams "fails to discloses [sic] a filament extending around the elongate member." *Id*. at pp.25-26. Accordingly, the claims were allowed over the same or the same type of art and combinations that Petitioner now relies on.

D. Person of Ordinary Skill in the Art (POSA)

A POSA in September 2017 would have had an undergraduate degree in mechanical engineering or a related engineering discipline and 2-4 years of product design or engineering experience designing medical devices in the field of the '921 Patent. A person with less education but more relevant practical experience, or more relevant education but less practical experience, may also meet this standard. EX2024, ¶¶61-62.

While Petitioner's proposed definition of a POSA includes a similar level of education, Petitioner's definition omits any requirement of experience in designing medical devices generally, let alone in the field of the '921 Patent. Petition, p.16. In fact, Petitioner's expert testified during the related '011 IPR that a POSA would need no experience designing hemostasis valves, and no experience designing medical devices at all. EX2030, 180:5-25. But, experience in the field of the invention is a critical component of the skills a POSA would need. Indeed, Petitioner's expert contradictorily explained that the starting point to design or select a hemostasis valve is an understanding of the requirements of the particular medical procedure for which the valve will be used:

> Q: So then is it fair to say, in selecting a hemostasis valve for use with a procedure, to determine the design requirements for the hemostasis valve, you would need to understand the needs of the procedure?
>
> ***
>
> THORNTON: Needs from the physician, the needs of the procedure, the needs of the patient.

EX2030, 24:5-21.

Petitioner's arguments and reliance upon a declaration from an incomplete perspective having no understanding of the design considerations including medical procedures and tools used therewith should be afforded little or no weight. A POSA,

under Petitioner's definition, would have no understanding of why Schaffer is designed to seal via nonconforming actuating members that apply compression to an internal conforming seal member and would have given no weight to the advantages of such a configuration or why a POSA would not have modified Schaffer to arrive at the claimed invention, e.g., that Schaffer's internal seal member provides a seal with precise control of compression force for easy manipulation of, and to prevent damage to, delicate tools inserted therethrough. EX1005, ¶¶[0006]-[0007]; EX2024, ¶56. Instead, Petitioner's expert claims, for example, that a POSA with no medical experience could simply increase the spring strength (*see* Petition, p.55; *see also* EX1003, ¶¶128-129), contradicting that express goal of Schaffer.

E. Claim Construction: "Filament"

The claims each require a valve including a "filament." A POSA would understand that the term "filament" should be accorded its plain and ordinary meaning: "a thin, flexible length of material formed by one or more strands of material."

At deposition in related litigation, Petitioner's expert testified that the plain and ordinary meaning of "filament" includes flexibility. Specifically, when questioned about the meaning of the term "filament" in U.S. Patent No. 11,744,691, which incorporates the disclosure of the '921 Patent and also claims a valve including a "filament," Petitioner's expert testified that "in the ordinary meaning of

filament, it has flexibility." EX2028, 123:1-3. Accordingly, Petitioner's expert agrees that the plain and ordinary meaning of "filament" requires flexibility.

Because the plain meaning of the term filament requires flexibility, Petitioner argues here that the '921 Patent engages in lexicography and "reveal[s] a special definition" for the term "that differs from the meaning it would otherwise possess" because—according to Petitioner—the '921 Patent provides examples of "filaments" that allegedly use the term more broadly than that plain and ordinary meaning. Petition, pp.17-19. But Petitioner's arguments do not meet the standard needed to show lexicography, which requires clear and unambiguous disclosure sufficient to depart from the plain and ordinary meaning. *Kyocera Senco Indus. Tools Inc. v. Int'l Trade Comm'n*, 22 F.4th 1369, 1378 (Fed. Cir. 2022) ("To act as its own lexicographer a patentee must clearly set forth a definition of the disputed claim term other than its plain and ordinary meaning and must clearly express an intent to redefine the term"); *see also Hill-Rom Services, Inc. v. Stryker Corp.*, 755 F. 3d 1367, 1371 (Fed. Cir. 2014) (internal citations omitted) ("The standards for finding lexicography and disavowal are exacting.").

The Board has considered the parties' respective constructions in IPR proceedings for related patents, finding that claims directed to the loop embodiments in Figures 6-7 of the '921 Patent require flexibility but refraining from construing "filament" according to either parties' construction for claims encompassing the

bight embodiments in Figures 8-9. *See* EX2032, pp.15-21. Specifically, the Board has found that "there appear to be material distinctions between filaments that form a 'loop' as claimed versus filaments that form 'bights.'" *Id*. at p.18. Here, the Claims encompass both loop and bight embodiments, but the intrinsic record is clear—in either a bight or a loop configuration a POSA would understand the claimed filament to be "flexible."

1. Claim language

Petitioner concedes that the claim language provides no basis for Petitioner's proposed departure from the plain meaning of the term filament. Petition, p.19 ("the claims provide little information regarding the 'filament.'"). But, the language of Claim 1 (and 25) requiring an "active tensioning mechanism including … a filament" supports Patent Owner's proposed construction because a POSA would understand the filament must be flexible to be actively tensioned. EX2024, ¶¶67-68.

With this design the actuator actively changes (increases or decreases) the tension in the filament when the actuator is moved between the first and second positions. *Id*. at ¶68; EX2025, p.1288 (defining the verb "tension" as to "tighten to a desired or appropriate degree") and p.13 (defining "active" as "producing or involving action or movement"). A POSA would understand the "active tensioning mechanism" to require movement/change of the tension in the filament—e.g., loosening of the filament when the actuator is moved to the second position and

tightening of the filament when the actuator is moved to the first position as disclosed throughout the '921 Patent. EX2024, ¶68. If the filament were rigid/inflexible, there would be no "active tensioning." *Id*. Thus, the recitation in Claims 1 and 25 of an "active tensioning mechanism including … a filament" supports that the term filament should be accorded its plain and ordinary meaning.

2. The specification

The '921 Patent provides examples of two general arrangements of filaments: formed into loop(s) as in Figures 6-7 and formed into bight(s) as in Figures 8-9. EX1001, 13:10-35.

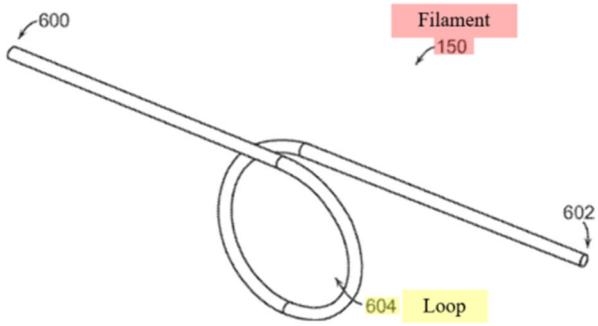

FIG. 6

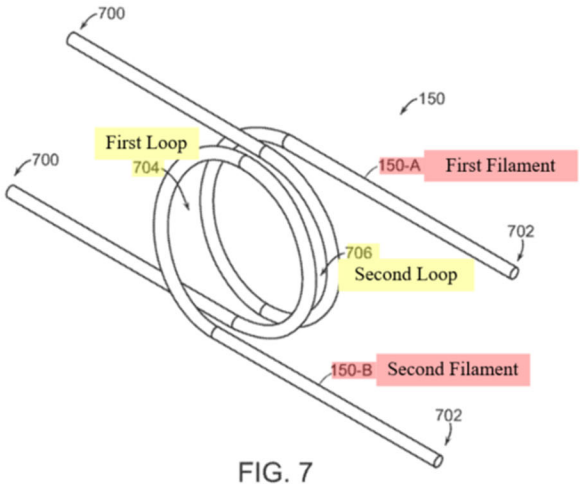

FIG. 7

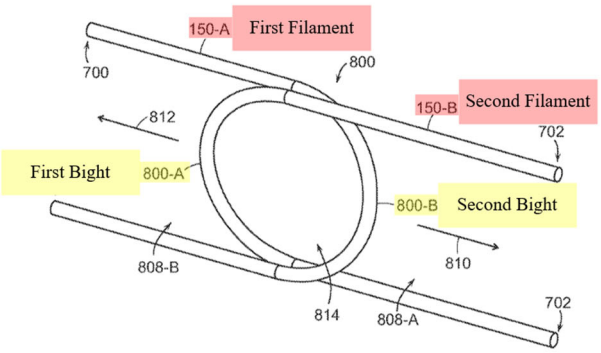

FIG. 8

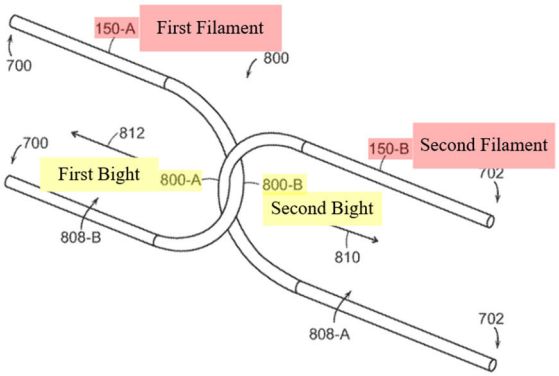

FIG. 9

As noted above, the Board has found in the related IPRs that a flexible filament is required for the loop embodiments but has questioned whether the bight embodiments require the same flexibility. *See* EX2032, pp.15-21. But a POSA would understand the bight embodiments do require flexibility based on the disclosure of the '921 Patent. For example, the '921 Patent discloses that when the buttons 144 are depressed to open the valve, "the filament 150 is ***loosened***, thereby allowing the expansion of the elongate member 132 and the unsealing of the central lumen 138 of the elongate member 132." EX1001, 9:53-56 (emphasis added). Likewise, when the buttons are released "the filament 150 is ***tightened***." *Id*. at 9:36-37 (emphasis added). That disclosure of the filament 150 applies to all embodiments of the filament including the "different embodiments and/or configurations of the filament 150" shown in Figures 6-9 including the loop and bight embodiments. EX1001, 12:37-39; EX2024, ¶69. And, a bight by definition is formed from slack

and therefore must be flexible to form slack. EX2025, p.120 ("bight": a "slack part or loop in a rope"); EX2024, ¶70.

A POSA would understand that when the tension on the filament is "loosened," the filament slackens and relaxes as the tension is decreased therein. *Id*. at ¶¶70, 72. "Loose" is defined as "not tightly drawn or stretched: ***slack***" and "being ***flexible***." EX2025, p.735 (emphasis added). Conversely, when the filament is "tightened," a POSA would understand that the slack is removed as tension in the filament increases and the filament constricts the tube. EX2024, ¶70. A POSA would further understand that this is precisely the type of "active tensioning" recited in the Claims—the filament loosens/slackens when the actuator buttons are pressed and tightens when they are released. *Id*. Thus, the ability of the filament to flex/slacken is a necessary property of the filament—whether formed into a loop or bight—that allows the filament to "loosen" so that the elongate member can expand and unseal the valve and "tighten" to constrict the elongate member and seal the valve. *Id*. The filament's ability to flex is therefore not optional but necessary, consistent with the plain and ordinary meaning of "filament."

And, contrary to Petitioner's position, the nonlimiting list of example filaments in the '921 Patent further supports that the '921 Patent has not redefined the term "filament" to depart from its plain and ordinary meaning. Petitioner's purported examples of inflexible filaments are not filaments at all, but instead are

simply example materials from which a filament can be made or forms that the filament can take. EX2024, ¶73. None of those materials or forms supports that the '921 Patent has departed from the plain meaning of the term filament, let alone redefined the term as Petitioner urges. Nor does Patent Owner's proposed construction exclude specific filaments as, for example, a sheet/tape of metal/polymer would comprise one strand of material—a "monofilament" as disclosed in the '921 Patent—and multiple such sheets/tapes could also be "twisted, woven, grouped and/or fused to form [a] filament" as disclosed in the '921 Patent. EX1001, 9:10-15; EX2024, ¶74.

At deposition in the related '011 IPR, Petitioner's expert confirmed that every material and form of a filament in the '921 Patent is consistent with the understanding that a filament is a "thin, flexible length of material formed by one or more strands of material." First, Petitioner's expert confirmed that the '921 Patent's disclosure that a "filament" can be formed from "a polymer, a synthetic, and/or a metal" or "can be nylon, stainless steel, nitinol, silicone, or the like" (EX1001, 9:7-10), does not indicate to a POSA that the filament is not flexible. EX2030,125:2-126:4 ("The relative flexibility or the relative stiffness or rigidity is not clear from those three materials without knowing much more information"). Similarly, every disclosed form of the "filament" is also consistent with the plain meaning of the term

filament to be "thin, flexible length of material formed by one or more strands of material." EX2024, ¶73.

Petitioner's expert summed up all the materials/forms disclosed in the '921 Patent as consistent with the plain and ordinary meaning of the term "filament" as follows:

> Q: So the fact that the filament is made from any of the materials identified in this section … doesn't tell one of skill in the art how flexible or rigid the filament is, does it?
>
> [Objection]
>
> THORNTON: … you would need to know more details about the material and the dimensions and the construction of those materials to be able to quantify or compare relative flexibility of one element versus another.

EX2030, 131:25-132:12. Petitioner's expert further testified:

> Q: [O]ne skilled in the art could construct a filament out of any of those materials, in any of those forms – threads, lines, cords, rope, ribbon, flat wire, sheet or tape – that would be sufficiently flexible to loop around a lumen in a hemostasis valve; isn't that correct?
>
> THORNTON: As long as other elements, like the tube itself and the springs to actuate the filament, were part of the design process, then, I think, yes.

Id. at 131:16-24. Accordingly, such a nonlimiting of example materials or categories of form does not redefine or broaden the term filament from its plain and ordinary meaning.

3. Prosecution history

Petitioner's proposed construction of filament to include example structures ("one or several threads, lines, cords, rope, ribbon, flat wire, sheet, or tape") that can be rigid is overly broad and contrary to the Patent Office's repeated interpretation of "filament" during prosecution. For example, in the Notice of Allowance the Examiner found that Hartley and Williams were the "closest prior art of record," and that Hartley discloses a "filament" whereas Williams does not. EX1002, pp.25-26. Indeed, in accordance with the plain and ordinary meaning of the term, Hartley discloses a thin and ***flexible*** string 14 (EX1006, ¶[0031]) while Williams discloses a ***rigid*** clamp 16 having a rib 24 that is biased to compress and seal a tube 12 (EX1010, 2:39-44, 2:63-65). EX2024, ¶¶75, 85. Williams' valve is substantially similar to Schaffer in which a non-flexible/rigid member compresses a tube to seal. *Id*. at ¶85.

Thus, the Examiner plainly understood that a flexible string was a "filament" while a rigid actuating structure (clamp/rib) was not. But, under Petitioner's overly-broad construction, the rib 24 of Williams is a filament because it is rigid and at least a "line," "cord," "ribbon," or the like as best seen in Figure 3:

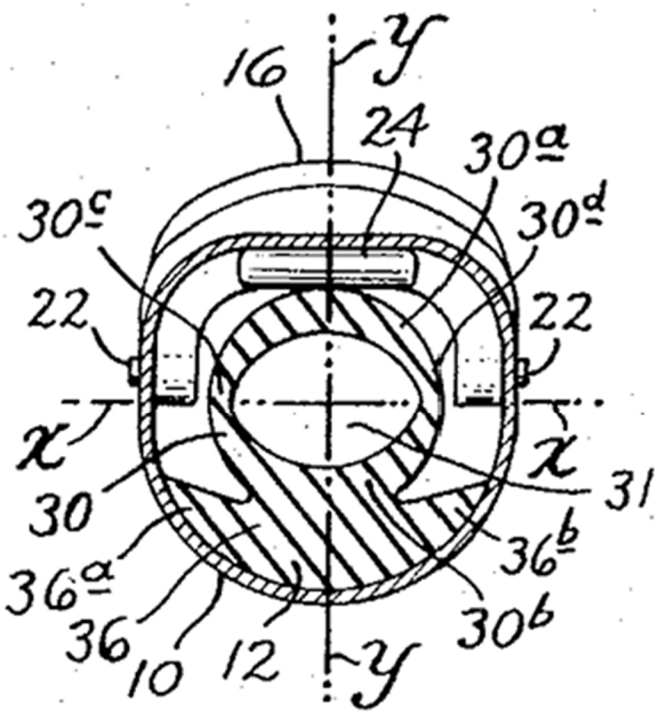

Fig. 3.

EX2024, ¶86.

The Patent Office also specifically analyzed additional references that are substantially similar to Schaffer having rigid actuating members that are biased to compress and seal a resilient/expandable tube including, for example, Wong (EX2019) and Kees (EX2018). EX1002, p.29; EX1001, p.5. And again, in accordance with the plain and ordinary meaning of "filament," the Patent Office did not find those references to disclose a filament. EX2024, ¶¶77-84.

Wong discloses a hemostatic valve 13 that is substantially similar to Schaffer having an elastic valve member 19, a pair of rigid actuating first sliders 15, and a pair of rigid V-shaped second sliders 17 disposed about the valve member 19:

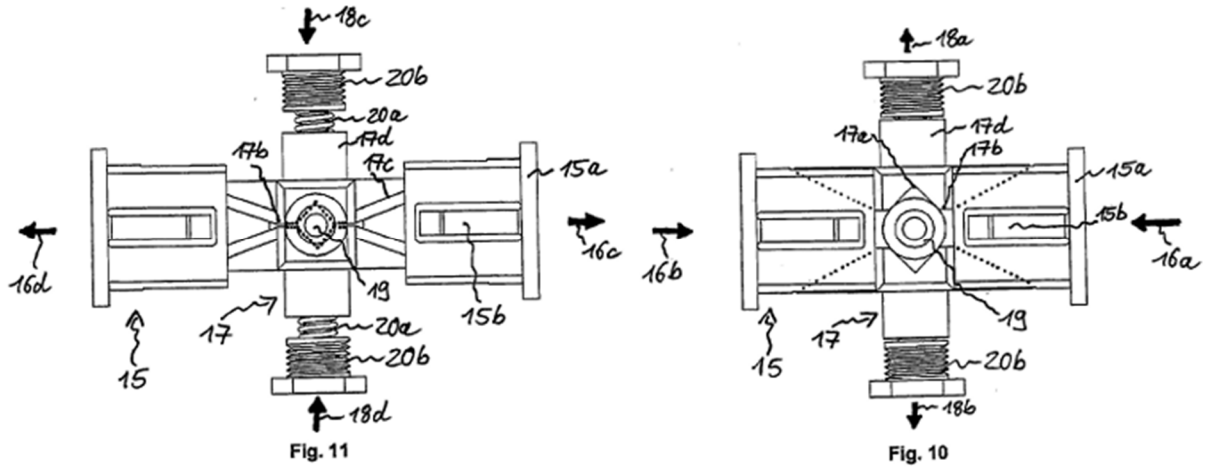

EX2019, ¶¶[0042], [0052]; EX2024, ¶78. Two springs 20a bias the actuating first sliders 15 such that the second sliders 17 compress and seal the elastic valve element 19 (Figure 11), and the first sliders 15 can be actuated to permit the valve element 19 to expand and open/unseal (Figure 10). EX2019, ¶¶[0061]-[0062]; EX2024, ¶78.

Kees also discloses a valve 1 that is substantially similar to Schaffer having a tube-like valve member 25, an actuating ring 37, and a pair of rigid pinch elements 28a-28b disposed about the valve member 25:

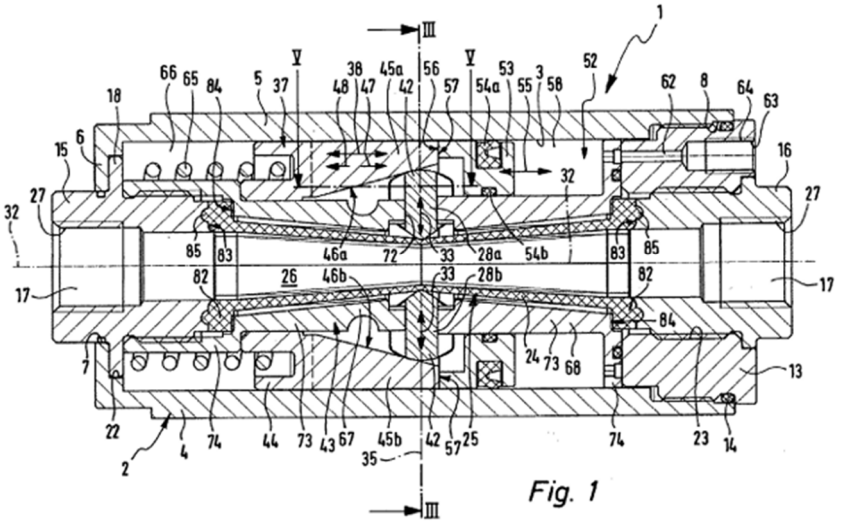

Fig. 1

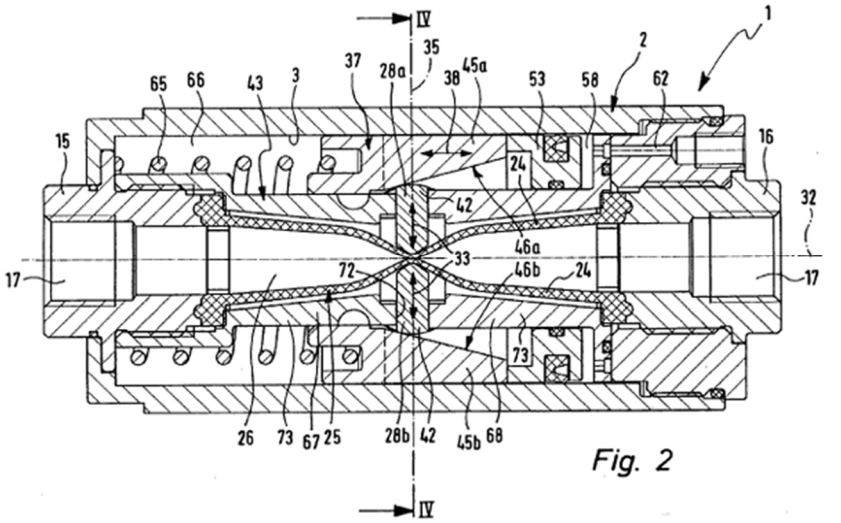

Fig. 2

EX2018, ¶¶[0046], [0048], [0055]; EX2024, ¶82. Spring means 65 bias the actuating ring 37 such that the pinch elements 28a-28b compress and seal the valve member 25 (Figure 2), and the ring 37 can be actuated to permit the valve member 25 to open/unseal (Figure 1). EX2018, ¶¶[0053]-[0054], [0071]-[0072]; EX2024, ¶82.

But the Patent Office allowed the Claims over Wong and Kees and, in accordance with the term's plain and ordinary meaning, did not find that the V-

shaped second sliders 17, pinch elements 28a-28b, or any other rigid actuating structure of Wong/Kees constituted a "filament." In contrast, under Petitioner's overly-broad construction, the V-shaped second sliders 17 of Wong and the pinch elements 28a-28b of Kees would be filaments because they are at least a "line," "sheet," "ribbon," or the like, regardless of their rigidity as best seen in Figure 4 of Wong and Figure 3 of Kees:

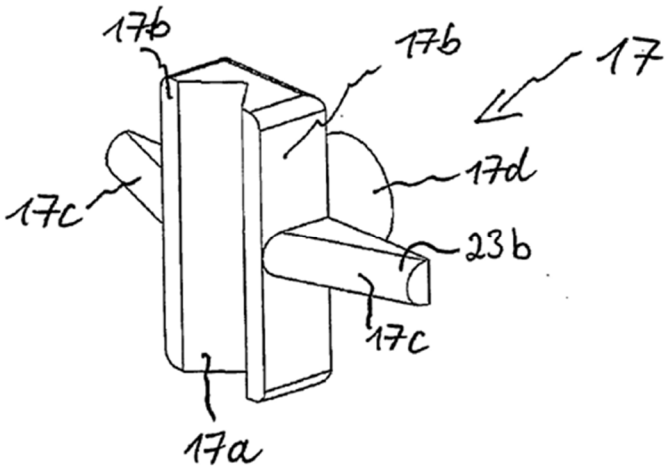

Fig. 4

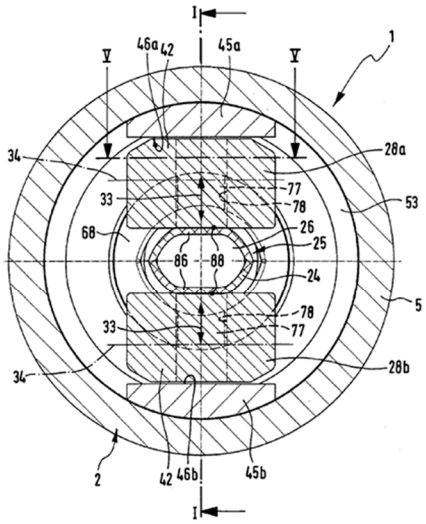

Fig. 3

EX2024, ¶¶79, 83. Yet, the Patent Office found that Wong and Kees do not disclose a "filament" during prosecution of the parent application to the '921 Patent, U.S. Patent Application No. 16/117,519, having claims similar to the challenged claims here. EX2020, pp.4-5 ("the prior art[] Wong … [is] missing the filament") ("the prior art … Kees [is] missing the filament.").

Accordingly, the Patent Office understood that Hartley's string was a "filament" because it is thin and flexible, whereas the Patent Office understood the rigid actuating structures of Wong, Kees, and Williams are not filaments contradicting Petitioner's overly-broad construction of "filament."

4. Extrinsic evidence

Merriam-Webster's Collegiate Dictionary defines a filament as "a single thread or a thin flexible threadlike object, process, or appendage." EX2025, p.467. *See also* New Oxford American Dictionary, EX2026, p.644 (filament: "a slender threadlike object or fiber"). That definition confirms the plain and ordinary meaning of filament to a POSA: "a thin, flexible length of material formed by one or more strands of material." EX2024, ¶87.

Petitioner's expert, in his own patent, equated a "filament" to a "thread-like element." Petitioner's expert confirmed at deposition in the related '011 IPR that he is the first named inventor for U.S. Patent No. 7,682,380 (EX2029, "Thornton"). EX2030, 199:10-200:20. Thornton references Figure 1 and recites that "the coupling member 104 is shown as a filament or thread-like element." EX2029, 8:7-9.

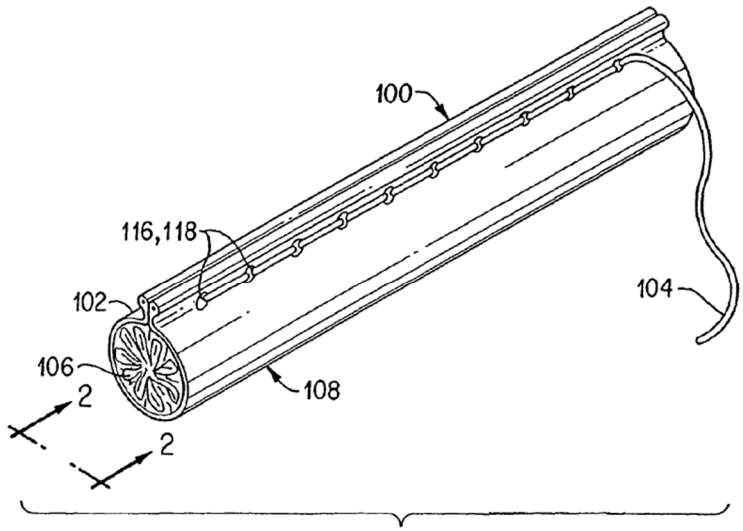

FIG. 1

This patent also confirms that the filament is thin and flexible reciting that "coupling member (104) may be laced or threaded[.]" *Id*. at 8:53. And it further discloses that its "filament or thread-like element" can be made from various polymers or metal and yet still be thin and flexible. *Id.* at 9:18-22. Accordingly, Petitioner's own expert's use of the term "filament," at least when he was explaining his own alleged invention, supports Patent Owner's proposed construction.

5. A POSA would understand the degree of flexibility of the "filament."

A POSA would understand the degree of "thin and flexible" required by the "filament" in the context of the '921 Patent claims. In the Institution Decision in the related '011 IPR, the Board questioned how flexible a structure would need to be to qualify as a "filament" as claimed. EX1017, p.15. While rigidity and flexibility exist along a spectrum, a POSA would readily understand the flexibility required for the

claimed filament in the context of a filament to constrict a hemostasis valve as described in the '921 Patent—the filament must be sufficiently flexible so that it can loosen, reduce in diameter when formed in a loop as shown in Figures 6-7, and slacken when formed in a bight as shown in Figures 8-9. EX2024, ¶89. That is, a POSA would understand that in the context of the '921 Patent's hemostasis valves, the filament must be flexible to the degree necessary to slacken/loosen when the actuator is actuated (e.g., depressed) as disclosed throughout. *Id*.

And, Petitioner's expert agrees:

> Q: So that level of flexibility, in this context of a hemostasis valve for an aspiration catheter, one skilled in the art would be able to determine what that level of flexibility is, wouldn't they?
>
> THORNTON: I think a person skilled in the art would be able to engineer the right balance of material properties for the filament, the compression tube, or tubular sidewall, the springs, et cetera, in order to make the design work well.

EX2031, 38:22-39:7. In other words, a POSA could readily determine how flexible the filament need be for the hemostasis valve to function as claimed.

6. Conclusion

The '921 Patent does not redefine the term "filament" via a nonlimiting set of example materials. There is no such lexicography, and the specification is clear that the operation of the disclosed and claimed valves requires flexibility. As such the

term filament should be accorded its plain and ordinary meaning, "a thin, flexible length of material formed by one or more strands of material."

III. THE CLAIMS ARE NOT ANTICIPATED BY SCHAFFER (GROUND 1)

Schaffer discloses a hemostasis valve that employs a fundamentally different method of sealing from the Claims—rigid actuating members that compress a seal module without conforming to the outer surface of the seal module. Because Schaffer's actuating members do not conform to the seal module, the seal module includes an internal "highly compliant third central seal member 165 [that] seals around a variety of profile shapes 192 and diameters 194 of the lumen 193 when … [a] compressive force 67 is exerted" thereupon. EX1005, ¶60.

In contrast, Claim 1 of the '921 Patent requires an "***active tensioning mechanism*** including an actuator coupled to the elongate member via a ***filament***" wherein the "actuator is moveable" to "a first position wherein the lumen is constricted and sealed." Claims 15 and 21 similarly require a "filament."

Schaffer fails to disclose a "filament" under either party's proposed claim construction. Accordingly, Schaffer fails to anticipate Claims 1, 15, or 21 (and the claims depending therefrom).

A. Schaffer Fails to Disclose a "Filament" Under Patent Owner's Construction

As set forth above, the term "filament" recited in the Claims means "a thin, flexible length of material formed by one or more strands of material." In contrast, Schaffer discloses ***rigid*** U-shaped actuating members—not a "filament"—and therefore does anticipate the Claims. EX2024, ¶¶92-100. Indeed, the Board recognized that Schaffer's actuating members 55 are rigid in an Institution Decision in the related '012 IPR: "we agree … that a skilled artisan would more likely understand the U-shaped actuating members described in Schaffer as being substantially 'rigid.'" EX2032, p.32.

Petitioner implicitly admits that Schaffer's U-shaped actuating members 55 are rigid, asserting that those members would purportedly form gaps and a poor seal as the supposed motivation to modify Schaffer. Petition, p.36. And, Schaffer provides ample disclosure that its actuating members are rigid. EX2024, ¶¶92-100.

First, Schaffer explains that its U-shaped actuating members "forcibly disengage opposing outer walls 27 of the seal module 100" to allow it "to retract to an uncollapsed configuration" when "each actuator button 261 is depressed." EX1005, ¶[0077]. The actuating members need to be rigid to "forcibly disengage" the seal module. EX2024, ¶¶95-96. In contrast, if flexible, the actuating members

would remain in contact with and never disengage the seal module as the seal module expands. *Id*.

Second, Schaffer's only disclosed method of manufacturing its U-shaped members indicates they are rigid. Schaffer discloses that the actuating members 55 are "made from machining pre-existing amounts of metals and/or plastics." EX1005, ¶[0082]. A POSA would have recognized that machining plastic or metal would result in a rigid member. EX2024, ¶97.

Third, Schaffer's disclosed method of assembly relies on the rigidity of its actuating members to form an area through which a seal module can be inserted: "[e]ach actuator button 261 is completely compressed and held while the seal module 100 is inserted through the housing 20 and between each actuator 50." EX1005, ¶[0083]; EX2024, ¶98. Because Schaffer's actuating members are rigid, an opening is formed for the seal module to be inserted through. If those members were flexible, they would collapse/deform without forming an opening to insert the seal module. EX2024, ¶99.

Petitioner has therefore failed to demonstrate a reasonable likelihood that Schaffer anticipates the Claims for the reason alone that Schaffer's U-shaped actuating members individually and together are not flexible.

Despite the substantial disclosure that Schaffer's actuating members are rigid, Petitioner simply asserts that it "is inaccurate" that Schaffer's actuating members are

rigid because "Schaffer does not describe the actuating members as 'rigid,' nor does it contain disclosure suggesting rigidity." Petition, pp.30-31. Such an assertion is incorrect based on Schaffer's disclosure discussed above. Petitioner's expert goes further, stating that a POSA "would have understood that Schaffer's U-shaped actuating members would have preferably been formed from a thin, flexible material" to "permit[] the actuating members to conform, as much as possible, to the outer surface of the seal module and tool inserted through the valve." EX1003, ¶79. But even Mr. Thornton's simple graphic to support its motivation to modify Schaffer in view of Hartley or Eller based on purported "gaps" does not show any such conformance of the actuating members (orange) to the seal module (green):

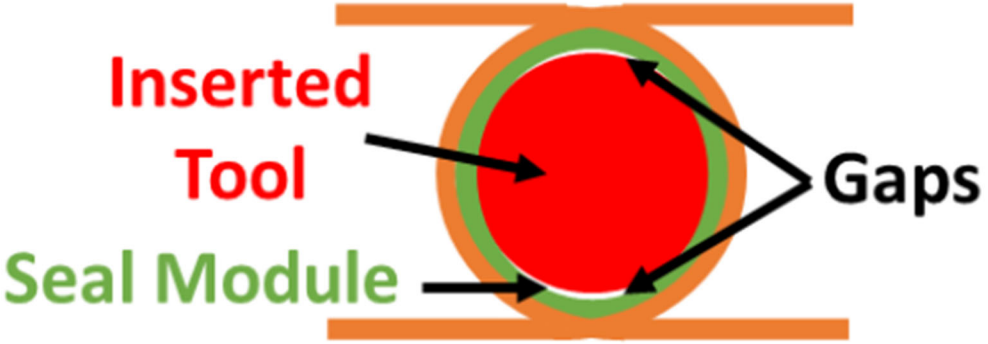

Petition, p.36; EX2024, ¶103. As such a POSA would understand the U-shaped members are nonconforming and rigid just like as shown in Petitioner's own graphic.

B. Schaffer Also Fails to Disclose a "Filament" Under Petitioner's Construction

Petitioner's claim construction requires that a "filament" is "one or more threads, lines, cords, ropes, ribbons, flat wires, sheets, or tapes." Petition, p.17. Even

accepting Petitioner's redefinition and broadening from the term's plain and ordinary meaning, Petitioner does not assert that Schaffer's U-shaped actuating members ***are*** any one of those examples as expressly required by Petitioner's own claim construction. Instead, Petitioner alleges that Schaffer's actuating members "may be formed from aluminum or plastic, and they ***resemble*** a ribbon, flat wire, sheet, or tape." *Id*. at p.30 (emphasis added). But, even accepting Petitioner's assertion that Schaffer's U-shaped actuating members "***resemble***" a "ribbon, flat wire, sheet, or tape," Petitioner's proposed construction requires that the filament ***is*** one of a "ribbon, flat wire, sheet, or tape."

Anticipation requires that the limitation is disclosed, either expressly or inherently. *See SRI Int'l, Inc. v. Cisco Sys., Inc.*, 930 F.3d 1295, 1306 (Fed. Cir. 2019). "Resembling" a claimed structure is insufficient to anticipate the claim limitation and in fact implies the opposite that the prior art structure does not expressly or inherently disclose the claimed limitation. *See*, *e.g.*, *In re Chudik*, 851 F.3d 1365, 1372 (Fed. Cir. 2017) ("a prior art reference that 'must be distorted from its obvious design' does not anticipate a patent claim."). Put differently, that Schaffer's U-shaped actuating members resemble a ribbon, flat wire, sheet, or tape simply means ***they are similar in some aspect*** but does not meet Petitioner's burden to prove that ***they are*** one of those structures.

More is required, and Petitioner's own expert explains exactly what that "more" is. Like Petitioner, Petitioner's expert first asserts that "Schaffer's figures depict the actuating members as ***resembling*** a ribbon, flat wire, sheet, or tape." EX1003, ¶79 (emphasis added). Then, Petitioner's expert further asserts that a POSA "would have understood that Schaffer's U-shaped actuating members would have preferably been formed from a thin, flexible material" because "[s]uch a material would have permitted the actuating members to conform, as much as possible, to the outer surface of the seal module and tool inserted through the valve." *Id.* That is, Petitioner's expert recognizes that a "ribbon, flat wire, sheet, or tape" requires more than just resembling any one of those structures, namely, it requires "a material [that] would have permitted the actuating members to conform, as much as possible," to the seal module and tool. *Id*. Patent Owner's proposed construction expressly articulates why those forms of a "filament" conform. Specifically, a POSA would understand that in the context of the field of the '921 Patent each of "threads, lines, cords, ropes, ribbons, flat wires, sheets, or tapes" would be "a thin, flexible length of material formed by one or more strands of material." EX2024, ¶73. Accordingly, Schaffer does not disclose a filament under Petitioner's proposed construction.

And, as explained above, Schaffer's U-shaped actuating members 55 are designed to be rigid and not to conform to the shape of the seal module as the actuating members apply compression—unlike the Claims of the '921 Patent.

Schaffer's design choice provides a more durable member with better control of compression and release (e.g., forcible disengagement) and ease of manufacture. EX2024, ¶¶149-162. Schaffer's design is thus able to take advantage of the benefits of nonconforming compression members and still provide a complete seal because "conforming to various shapes and sizes" in Schaffer occurs internal to the tube via the highly-compliant seal member 165. *Id*. at ¶¶117-120.

IV. THE CLAIMS ARE NOT OBVIOUS OVER SCHAFFER ALONE (GROUND 2)

A claim is not obvious if an element of the claim is missing from the cited art. *See Aug. Tech. Corp. v. Camtek, Ltd.*, 655 F.3d 1278, 1290 (Fed. Cir. 2011) (finding that asserted claims are not rendered obvious in view of the cited prior art because they do not supply the missing element for purposes of obviousness analysis).

As set forth in §III above, Schaffer does not disclose the "filament" recited in the Claims. Petitioner alleges that "even if Schaffer's lumen were not 'constricted and sealed' by the actuating members in the first position, as claimed in the '921 patent, a POSITA would have found it obvious to modify the actuating members to closely conform to the seal module to constrict and seal the lumen" in order "to form a better seal and avoid the potential gaps." Petition p.32. But such a modification would not have been obvious for at least the reasons set forth in §V below. In particular, a POSA would have had no motivation to make such a modification

because every embodiment of Schaffer includes the seal member 165 that seals completely (i.e., a POSA would understand that there are no "gaps") and such a modification would fundamentally change the principles of operations of Schaffer's valve including precise control using rigid actuating members, forcible disengagement, simple manufacturability, and durability. EX2024, ¶108. Accordingly, because Schaffer does not disclose or render obvious all the limitations of the Claims, Ground 2 fails.

V. THE CLAIMS ARE NOT OBVIOUS OVER SCHAFFER IN VIEW OF HARTLEY (GROUND 3) OR ELLER (GROUND 4)

A POSA would not have been motivated to replace Schaffer's U-shaped actuating members with Hartley's string or Eller's wire member. Petitioner's proposed modification and combinations are hindsight—requiring a POSA to first manufacture a non-existent problem with Schaffer (gaps/poor sealing) by omitting Schaffer's third seal member, then modify Schaffer to remedy that non-existent problem in a manner that fundamentally changes Schaffer's principles of operation. Moreover, Petitioner's proposed substitution is not a simple substitution of one known element for another because none of Petitioner's references disclose a single actuating member (e.g., U-shaped member, string, or wire) coupled to and controlled by two actuators as in Petitioner's only proposed combination. Petitioner and its expert also admit that there are several comparably more plausible

substitutions/modifications that would work to seal Schaffer's valve including those expressly disclosed in Schaffer. Those substitutions would not fundamentally change Schaffer's mode of operation. In contrast, a flexible string/wire would diminish the predictable sealing of Schaffer's valve. Likewise, Petitioner's expert admits there were an unknown—not finite and identified—number of options for constricting a tubular member in a hemostasis valve in 2017, contradicting Petitioner's reliance on an apparent "obvious-to-try" rationale.

A. A POSA Would Not Have Been Motivated to Substitute Hartley's String/Eller's Wire for Schaffer's Actuating Members

1. Petitioner's stated motivation to combine Schaffer with Hartley/Eller does not exist.

To demonstrate obviousness, Petitioner must provide a reason why a POSA would have been motivated to modify/combine the prior art to achieve the claimed invention. *Innogenetics, N.V. v. Abbott Labs*., 512 F.3d 1363, 1374 (Fed. Cir. 2008); s*ee also Axonics, Inc. v. Medtronic, Inc.*, 73 F.4th 950, 957 (Fed. Cir. 2023) ("When an obviousness challenge asserts a combination of identified prior art, the motivation-to-combine portion of the inquiry is 'whether a 'skilled artisan would have been motivated to combine the teachings of the prior art references to achieve the claimed invention.'"). Petitioner's asserted motivation to modify Schaffer's U-shaped actuating members would not have motivated a POSA because Schaffer's valve already solves the purported motivation—complete sealing without gaps.

Thus, Petitioner has not met its burden of showing that a "skilled artisan would have been motivated to combine the teachings" of Schaffer and Hartley/Eller. *Axonics,* 73 F.4th at 957.

Based only on its expert's statements, Petitioner claims that a POSA would have recognized that "[d]epending on the inserted tool, Schaffer's actuating members may form small gaps between the valve's seal module and the tool's outer surface," and that "Hartley's string may seal more effectively across a wider range of tool diameters and shapes than Schaffer's U-shaped actuating members." Petition, pp.36. Petitioner is wrong. ***Every illustrated embodiment*** of Schaffer discloses a valve that seals across a wide range of instruments without gaps—indeed, that is the purpose of Schaffer. EX2024, ¶¶115-118. More specifically, every illustrated embodiment of Schaffer includes the seal member 165 that seals without gaps across a wide range of tool/device diameters and shapes.

Each of Schaffer's embodiments—including the embodiment shown in Figures 30-34 relied on by the Petitioner—includes the seal member 165. EX2024, ¶¶54-58, 116-118, 121. For example, Schaffer discloses that the seal module 100 in Figures 30-34 "is formed of one or more seal members, as discussed above" with reference to Figures 1-29 and that (1) in the first sealed position of the valve 10 the "lumen 193 of the **third seal member 165** is at least partially collapsed by the compressive force 67" and (2) in the second unsealed position of the valve 10 the

"lumen 193 of the third seal member 165 is able to retract in an unsealed configuration." EX1005, ¶¶[0075], [0077] (emphasis added). Therefore, Schaffer is clear that the embodiment of Figures 30-34 includes the seal member 165. EX2024, ¶116.

And, at deposition in the related '012 IPR, Petitioner's expert agreed that the seal member 165 is included in every illustrated embodiment in Schaffer: Schaffer Embodiment: Figures 1-4 (EX2031, 69:12-70-3), Schaffer Embodiment: Figures 5-19 (*id*. at 70:5-71:23), Schaffer Embodiment: Figures 20-22 (*id.* at 71:24-72:19), Schaffer Embodiment: Figures 23-26 (*id.* at 72:20-73:2), Schaffer Embodiment: Figure 27 (*id.* at 73:3-5), Schaffer Embodiment: Figures 28 and 29 (*id.* at 73:6-9), and Schaffer Embodiment: Figures 30-34 (*id.* at 73:13-77:3).

Notably, Mr. Thornton's admission that Figures 30-34 include the seal member 165 is contrary to his declaration that "Schaffer makes clear that the valves in Figures 31-34 do not require the third portion." EX1003, ¶86; EX2024, ¶130. But, Schaffer recites that "one or more seal members" are included and then discloses only the third seal member 165 as effectuating the seal with respect to that embodiment. Petitioner's assertion that the embodiment of Figures 31-34 does not require the very seal member that Schaffer expressly recites forms the seal, only to turn around and argue that a POSA would then be motivated to redesign Schaffer's

valve because it forms a poor seal, is nonsensical. A POSA is not so devoid of common sense.

Indeed, Schaffer discloses that the third seal member 165 seals completely without gaps across a wide range of tool/device diameters and shapes. EX2024, ¶¶115-118. For example, Figures 16-19 of Schaffer show no gaps forming when the seal member 165 seals around a large circular lumen (Figure 16), a completely closed lumen without an instrument (Figure 17), an irregularly shaped lumen (Figure 18), and a small circular lumen (Figure 19):

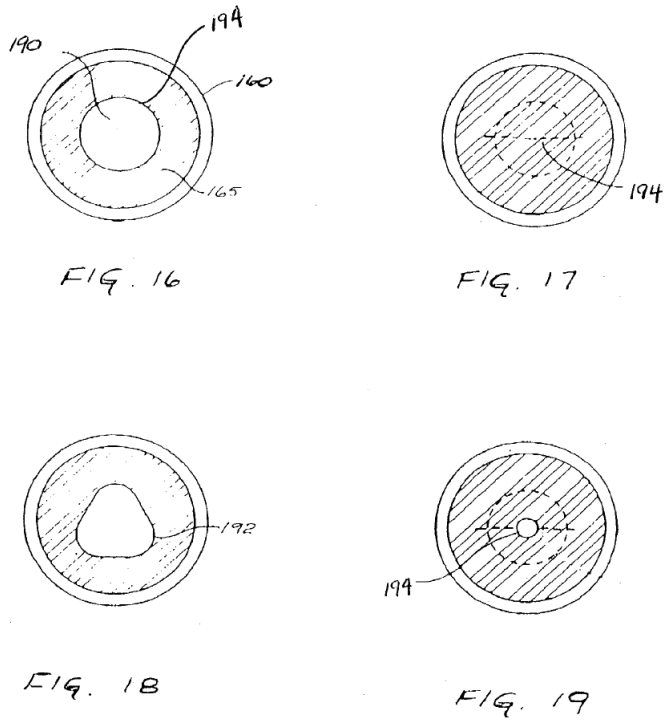

EX2024, ¶¶117-118 (citing EX1005, ¶[0060]). The seal member 165 seals completely in all those scenarios by being highly compliant to conform to different shapes. *Id*. at 121; EX1005, ¶[0060] ("the highly compliant third central seal

member 165 seals around a variety of profile shapes 192 and diameters 194 of the lumen"), ¶[0068] (the "material 166 of the third central seal member 165 is so compliant that it forms a seal around the [multiple] instruments 260 even if the instruments 260 are irregularly shaped.").

Petitioner argues that Patent Owner's arguments in the related '011 IPR that "Schaffer's valve would not create gaps … relied on a single embodiment in Schaffer while ignoring other disclosures undermining the argument." Petition, pp.36-37. However, as explained above, Schaffer discloses that the seal member 165 seals completely and is included in every illustrated embodiment, including the embodiment of Figures 30-34. EX2024, ¶¶118, 121.

Petitioner's expert also asserts that "[n]othing in Schaffer suggests that the third valve portion must be made with a 'sticky' or 'gelatinous' substance." EX1003, ¶86. In an Institution Decision in the related '012 IPR, the Board similarly found Schaffer's "sticky" and "gelatinous" properties to be optional. EX2032, p.41. But Schaffer's Figures 30-34 (and every embodiment of Schaffer) **do require** the seal member 165 that is highly compliant to effect sealing under compression, whether or not it is "sticky" and "gelatinous." EX2024, ¶121.

Indeed, a POSA would further understand that Schaffer's seal member 165 seals regardless of whether it is "sticky" or "self-closing.". *Id*. at ¶122. Schaffer discloses that "existing devices do not perform a complete seal against leakage in

the presence of a wide range of instruments or in the presence of multiple instruments," and identifies a need for a "durable stasis valve that blocks the flow of gas or fluid **completely** and immediately **with or without an instrument in place**." EX1005, ¶¶[0006], [0008] (emphasis added). A POSA would have understood that Schaffer's valves are designed do just that—seal completely—including in any embodiments without "sticky" or "self-closing" characteristics (via the seal member 165). EX2024, ¶¶122-123.

Even Petitioner and its expert acknowledge that "Schaffer discloses a hemostasis valve for use with catheters 'that blocks the flow of gas or fluid completely and immediately with or without an instrument in place.'" Petition, p.21; EX1003, ¶61. Moreover, Petitioner states: "If Schaffer's valve did not remain closed, blood would leak out of the catheter and the valve would not be a 'hemostasis' valve (i.e., a valve that stops blood loss) … Yet, Schaffer's valve blocks 'the flow of gas or fluid' during such medical procedures and, therefore, remains closed." Petition, pp.54-55; *see also* EX1003, ¶¶124-125. Accordingly, Petitioner and Mr. Thornton acknowledge—at least when it suits them—that Schaffer's valve completely seals and that, if it did not, it would not be a "hemostasis valve." This contradicts their purported motivation for substituting Schaffer's U-shaped actuating members with Hartley's string/Eller's wire to "seal more effectively" and avoid the formation of "small gaps."

Taken together, every embodiment in Schaffer includes the seal member 165, and the seal member 165—regardless of its specific material construction—forms a complete seal around various instruments or no instruments. Thus, **Schaffer does not form gaps**. Grounds 3-4 fail for this reason alone: "[a] motivation to combine the teachings of references cannot be based on the alleged existence of a problem that does not exist …". *Aruba Networks, Inc. v. Xr Commc'ns LLC*, No. IPR2018-00701, 2018 WL 4090629 at *4 (P.T.A.B. Aug. 27, 2018) (denying institution), citing *In re Schweickert*, 676 F. App'x 988, 996 (Fed. Cir. 2017).

Petitioner's expert admitted at deposition in the related '011 IPR that if Schaffer forms a complete seal, there would be no need to modify Schaffer's actuating members:

> Q. So if Shafer's U-shaped members formed a complete seal around multiple tools, there would be no reason to include Ellers' wire member or Hartley's string in Shafer; isn't that correct?
>
> ***
>
> THORNTON: If it worked perfectly for all the range of tools, then there probably wouldn't be a need to make adjustments and move to a string-type member.

EX2030, 116:18-117:2. Dr. Zalesky agrees. EX2024, ¶119.

That is the case here—Schaffer's valve seals for the range of tools by virtue of the compliant seal member 165. According to even Petitioner's expert, in that

instance a POSA would not have had a motivation to modify Schaffer to incorporate Hartley's string or Eller's wire.

2. Petitioner's alleged defect in Schaffer would only exist after first modifying Schaffer to create an inferior valve—but even this would fail to motivate a POSA to substitute Hartley's string or Eller's wire.

As set forth above, the highly-compliant seal member 165 in every embodiment of Schaffer provides a complete (non-gapless) seal across a wide range of instruments. Thus, to arrive at Petitioner's stated motivation—the presence of gaps—a POSA would need to **remove** or omit the third seal member 165 to create the purported gaps. Only then according to Petitioner, would a POSA need to look elsewhere to solve that self-inflicted defect. But:

(1) A POSA would not have removed the seal member 165 from Schaffer's valve;

(2) Even if a POSA did, Petitioner has not demonstrated that a POSA would have been motivated to solve their manufactured problem by adding Hartley's string/Eller's wire; and

(3) Petitioner's proposed modification based on Hartley/Eller would not solve the manufactured problem.

First, Petitioner provides no reason why a POSA would have removed or omitted the compliant seal member 165 from Schaffer's valve to create an inferior

valve: not one reason. A POSA would not have because doing so would not achieve Schaffer's stated purposes of creating a "complete seal against leakage in the presence of a wide range of instruments or in the presence of multiple instruments." EX1005, ¶¶[0006], [0008]; EX2024, ¶123. For that reason alone, Petitioner's arguments fail.

Second, even if a POSA were to remove the seal member 165 (they would not), a POSA still would not have been motivated to include Hartley's string/Eller's wire in Petitioner's proposed arrangement. In *Philip Morris Products S.A. v. RAI Strategic Holdings, Inc*., the Board found Petitioner had failed to establish that a POSA would have been motivated to modify a primary reference Hon based on a secondary reference Whittemore when Hon itself taught modifications that would have addressed the alleged motivation. IPR2020-01602, 2022 WL 1022576 at *11-12 (P.T.A.B. Mar. 30, 2022). Specifically, the Board disagreed with Petitioner's proposed modification to simplify Hon by entirely removing Hon's atomizer and replacing it with Whittemore's wick and heater because "Hon itself described ways to simplify its design," and Petitioner did "not show persuasively that [the modification] would have simplified the device **as compared with the modifications Hon expressly teaches**." *Id.* at *12 (emphasis added). The Federal Circuit affirmed explaining that "the proposed combination was based on a purported simplification of Hon **beyond what Hon itself teaches.**" *Philip Morris*

Prods. S.A. v. RAI Strategic Holdings, Inc., No. 2022-1846, 2023 WL 5970786 at *2 (Fed. Cir. Sept. 14, 2023).

Likewise here, Petitioner's motivation for modifying Schaffer requires modifying Schaffer beyond what Schaffer itself teaches. Schaffer itself teaches comparably simple modifications for solving the purported defect of Schaffer if, for some unarticulated reason, a POSA omitted Schaffer's seal member 165. First, a POSA would simply include the seal member: problem solved with no further modification to Schaffer or need to change Schaffer's principle of operation or express methods of manufacture.

Moreover, Petitioner and its expert admit that Schaffer's valve could be improved—if needed—by simply adjusting properties of the seal module (which is just another way of saying include the seal member 165, or something like it), the spring strength of Schaffer's springs, and the like as explained in detail below in §V.B.2. EX2024, ¶¶163-165. Petitioner has provided no reason why a POSA would first have been motivated to remove/omit the seal member 165 **and** then subsequently look elsewhere to solve the problem it manufactured.

Third, even if Schaffer were modified to remove the seal member 165, Petitioner's proposed combination would not solve the purported problem (gaps) when sealing around multiple/irregularly-shaped instruments—scenarios for which Schaffer's valve is specifically designed to address as explained above. EX2024,

¶125. For example, if two circular instruments were inserted side-by-side through Schaffer's seal module, Hartley's string/Eller's wire in Petitioner's combination (which requires removing the seal member) might not seal the space (e.g., gaps/divots) between the instruments as shown below:

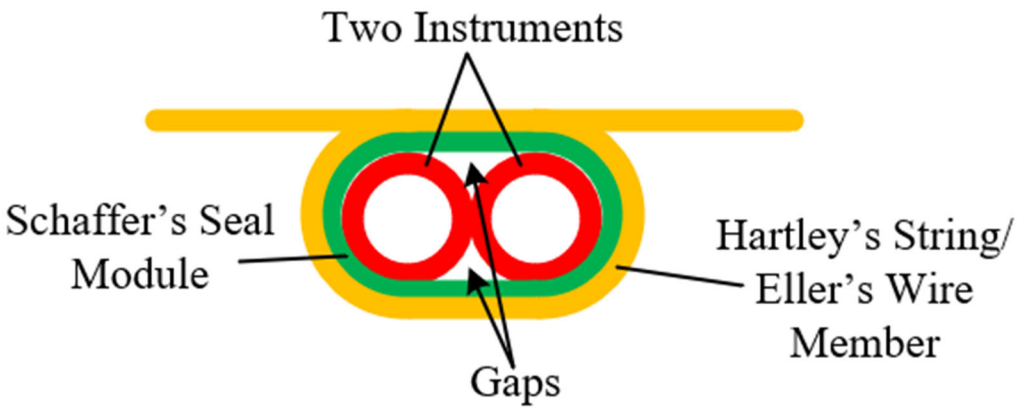

Id. In other words, and as described below in § V.B.3, Petitioner's proposed combination is **not** a "suitable option" for addressing the purported gaps and instead would create gaps not found in Schaffer. *Intel Corp. v. Qualcomm Inc.*, 21 F.4th 784, 800 (Fed. Cir. 2021). In contrast, Schaffer's disclosed design with the seal member 165 **would** seal around multiple instruments by filling in the gaps shown due to its highly-compliant nature, and thus would be a "suitable option." *Intel,* 21 F.4th at 800. A POSA would simply utilize Schaffer's disclosed design.

Thus, Petitioner has not met its burden of showing that a POSA would have been motivated to substitute Hartley's string/Eller's wire for Schaffer's U-shaped members to prevent Petitioner's purported gaps.

B. Petitioner's Proposed Modification Including Hartley's String/Eller's Wire Is Not a Simple Substitution

Petitioner advances a "simple substitution" rationale for substituting Hartley's string or Eller's wire member for Schaffer's U-shaped members. Petition, pp.35, 43; *See KSR Int'l Co. v. Teleflex Inc.*, 550 U.S. 398, 417 (2007). But, a single actuating member (U-shaped member, string, or wire) having two ends coupled to and controlled by different actuators is not disclosed in, and thus not "known" from, any of Petitioner's references. Moreover, a POSA would not have been motivated to substitute Hartley's string/Eller's wire for Schaffer's U-shaped members because they would have understood there are comparably more plausible substitutions—admitted by Petitioner—that would not depart from Schaffer's principles of operation including forcible disengagement, ease of manufacturing, and durability. *Philip Morris Prods. S.A. v. RAI Strategic Holdings, Inc.*, No. 2022-1846, 2023 WL 5970786, at *1 (Fed. Cir. Sept. 14, 2023) ("we view the Board in that case as agreeing with the patent owner's expert testimony that a more plausible 'simple substitution,' compared to the petitioner's proposed substitution, would be to replace Hon's entire atomizer…). Petitioner's proposed combinations would also not lead to the predictable result of sealing Schaffer's valve because Petitioner's proposed combination is not suitable for sealing around multiple/irregularly-shaped instruments, an express purpose of Schaffer's valve. *Intel Corp. v. Qualcomm Inc.*,

21 F.4th 784, 800 (Fed. Cir. 2021) ("It's not necessary to show that a combination is 'the best option, only that it be a *suitable* option.').

1. An actuating member including two ends attached to and controlled by different actuators was not "known" in the art.

Petitioner's proposed combination does not "merely entail substitution of one known element (Hartley's string [or Eller's wire]) for another (Schaffer's actuating members)." Petition, pp.35, 43. Instead, Petitioner's proposed combination requires one end of Hartley's string or Eller's wire to be attached to one of Schaffer's actuator buttons and the other end to be attached to the other of Schaffer's actuator buttons. In that way, each of Schaffer's actuator buttons independently control movement one end of the string/wire, as shown in Petitioner's demonstrative illustrations:

Demonstrative Illustration
Schaffer + Hartley's String

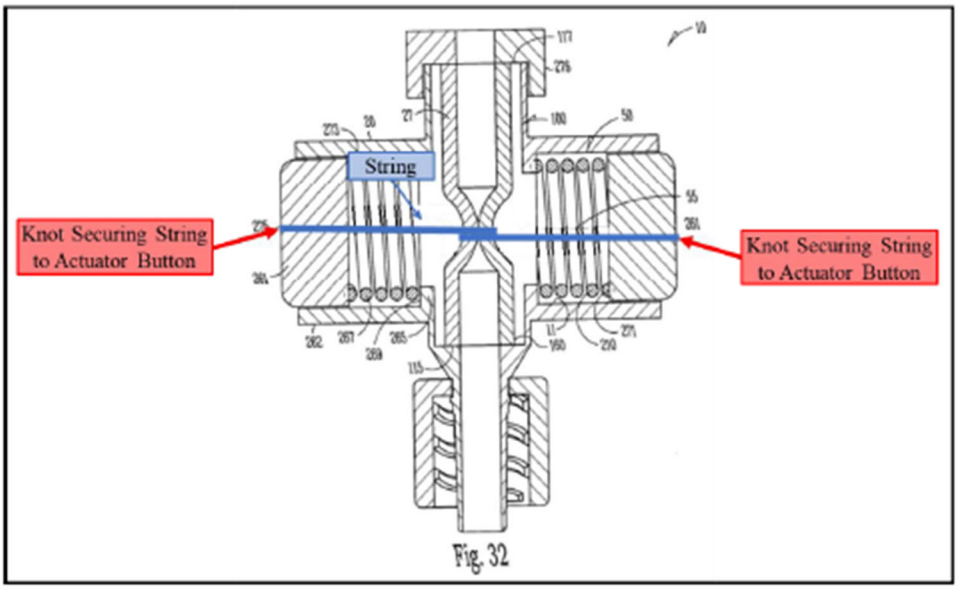

Demonstrative Illustration
Schaffer + Eller's Wire Member

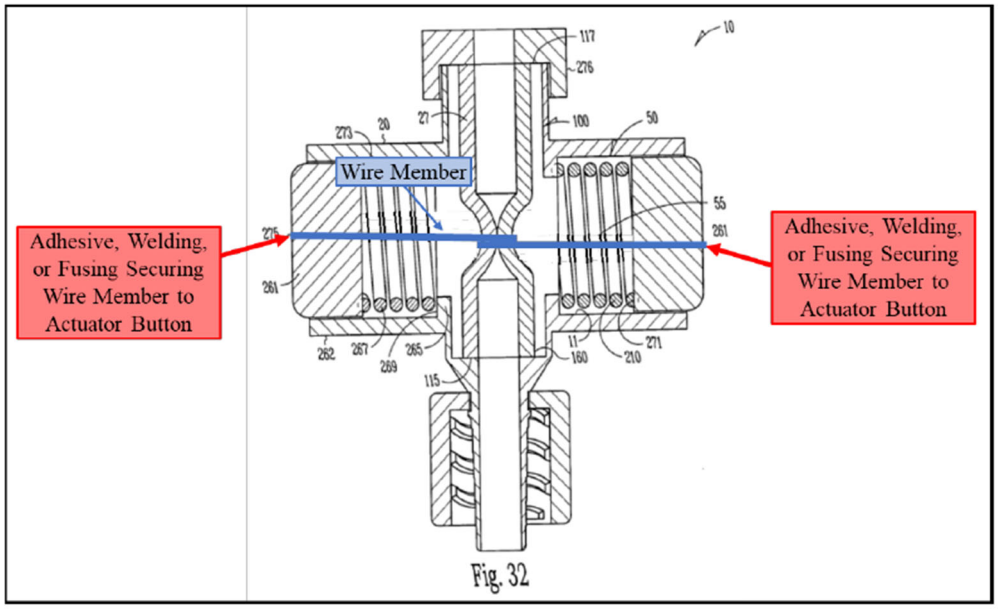

Id. at pp.37-38, 43-44. But, as Petitioner's expert admitted at deposition in the related '012 IPR, neither Schaffer, Hartley, nor Eller disclose Petitioner's proposed arrangement. As such, Petitioner's proposed combination is not simply substitution of strings or wires for Schaffer's non-conforming actuating members, but requires additional modification. And, Petitioner cites no reference disclosing a single string or wire attached to and controlled by two independently movable actuators, let alone provide any reason why a POSA would make that additional modification in its proposed combination.

Indeed, each of Schaffer's U-shaped rigid actuating members 55 are attached to one of the actuator buttons 261 such that movement of each actuator button controls movement of only one, not both, of the actuating members:

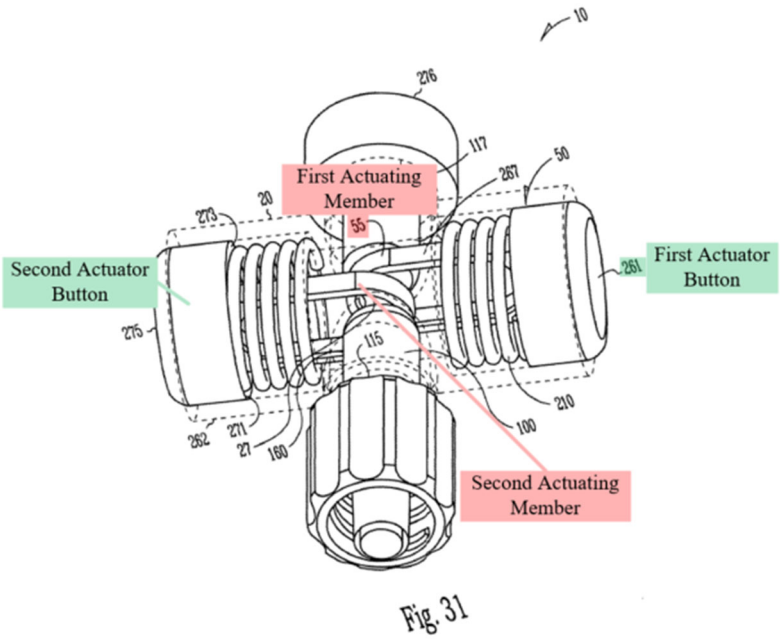

EX2024, ¶140. During deposition in the related '012 IPR, Petitioner's expert agreed. *See* EX2031, 57:13-22. Such a configuration is required because Schaffer's rigid actuating members could not function if they were attached to two separate independently-operable buttons because they would immovably tether the buttons together. EX2024, ¶140.

Hartley discloses an access valve having a string 14 extending around a cylindrical elastomeric diaphragm 8 and attached by knots 16/18 to a single rotary actuator 12:

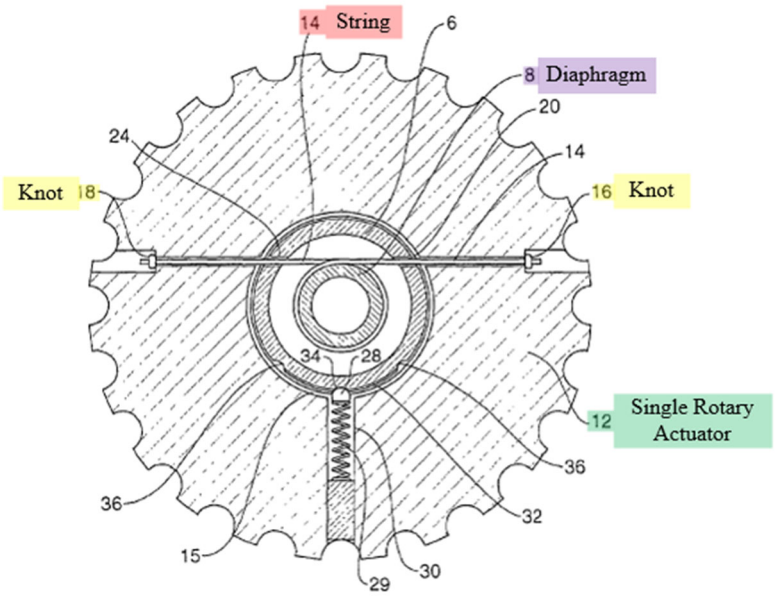

Fig 3

EX1006, ¶[0031]; EX2024, ¶141. The rotary actuator is a single integral piece such that both ends of the string are attached to and controlled by the same actuator. EX2024, ¶141. Neither end of the string can move without the exact same and equal movement of the other end of the string allowing for precise and predictable control of the valve's opening and closing. *Id*. Again, Mr. Thornton agrees. *See* EX2031, 77:12-22.

Eller discloses a selective fluid barrier device 810 including a housing 816, an actuator 818, a sleeve 820, and a wire member 822 having "a first end 924 attached to the housing 816 … and a second end 926 attached to the actuator 818":

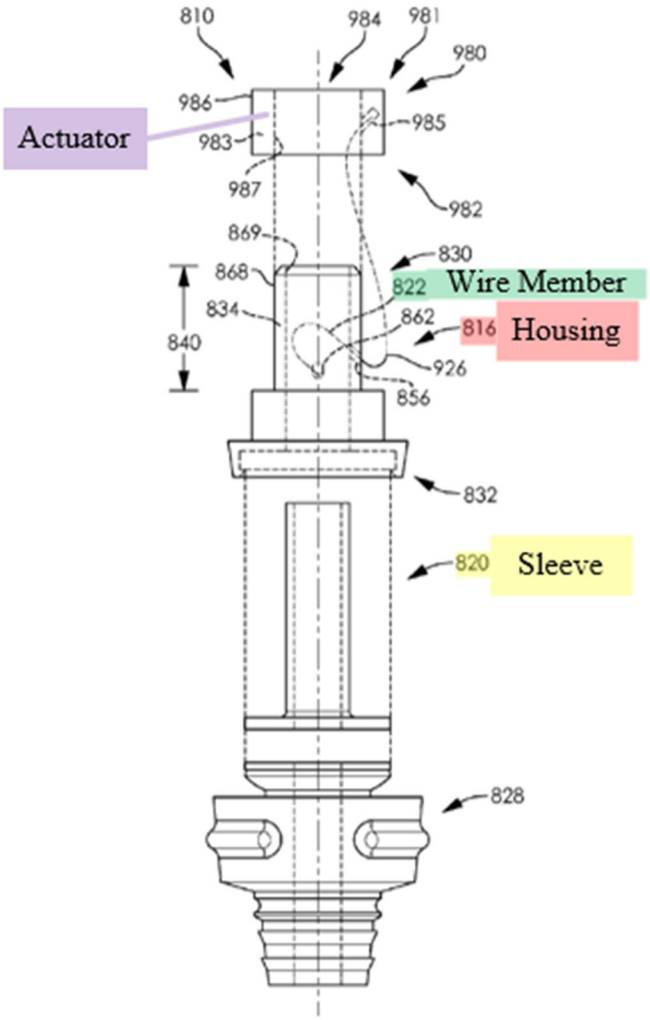

FIG. 20

EX1007, 23:50-62, 24:50-52. Eller discloses other embodiments with multiple wire members each having the same arrangement. EX2024, ¶¶142-144. In all embodiments, the wires have a first end coupled to a housing and a second end coupled to a single actuator. *Id*. at ¶145. Movement of the single actuator pulls only the second end while the first end remains stationary such that the wire moves predictably and a precise amount. *Id.* Again, Mr. Thornton agrees. *See* EX2031, 80:11-19.

Accordingly, both experts agree that Petitioner's references disclose a single actuator that controls movement of a single actuating member (U-shaped member/string/wire). Petitioner's arrangement including a string/wire having two ends attached to two separate independently movable actuators is not disclosed by any of Petitioner's references and was not a "known element." EX2024, ¶147.

Under Petitioner's proposed combination, a POSA would need to not only ***eliminate*** both of Schaffer's rigid U-Shaped actuating members and replace them with a ***single*** flexible wire/string, but would also have to modify Schaffer to connect that single wire/string to ***two different opposed actuators***—again, a configuration not found in any of Petitioner's references. EX2024, ¶¶146-147. Petitioner does not explain why this additional modification of the references would be obvious, let alone provide any reason why a POSA would make this additional modification. Even if the arrangement existed generally that would not provide a motivation to combine Schaffer with Hartley/Eller. *See Virtek Vision Int'l v. Assembly Guidance Sys.*, 97 F.4th, 882, 887 (Fed. Cir. 2024) (reversing PTAB finding of obviousness because the "mere fact that these possible arrangements existed in the prior art does not provide a reason that a skilled artisan would have substituted" one for the other.).

In sum, neither Schaffer, Hartley, nor Eller disclose any element (U-shaped member/string/wire) attached to separate, individually-controlled buttons as in

Petitioner's proposed combination, nor is there motivation to modify the references as Petitioner proposes. Grounds 3-4 fail for that reason alone.

2. A POSA would understand that Schaffer discloses other more plausible substitutions/modifications to address any purported sealing issues.

Petitioner's motivation to substitute Hartley's string/Eller's wire for Schaffer's U-shaped members is based on its expert's testimony that the combinations would "seal more effectively" and avoid the formation of "small gaps." Petition, pp.36, 43. As set forth in §V.A. above, a POSA would not have been so motivated because Schaffer includes the highly-compliant seal member 165 which seals completely around a wide range of and multiple instruments. Even assuming that Schaffer's valve somehow did not seal in some embodiments, a POSA would not have been motivated to substitute Hartley's string/Eller's wire for Schaffer's U-shaped members because they would understand there are comparably more plausible substitutions that would not depart from Schaffer's principles of operation including forcible disengagement, ease of manufacturing, and durability. *R.J. Reynolds Vapor Co. v. Fontem Holdings 1 B.V.*, IPR2016-01268, Paper 63, pp. 17-18 (P.T.A.B. Dec. 19, 2017) (finding Petitioner's proposed simple substitution nonobvious because there was a comparably more plausible substitution to simply replace the primary reference's entire atomizer with the secondary reference's atomizer); *see also Philip Morris Prods. S.A. v. RAI Strategic Holdings, Inc.*, No.

2022-1846, 2023 WL 5970786, at *1 (Fed. Cir. Sept. 14, 2023) ("we view the Board in that case as agreeing with the patent owner's expert testimony that a more plausible 'simple substitution,' compared to the petitioner's proposed substitution, would be to replace Hon's entire atomizer").

Here, Petitioner and its own expert provide several other substitutions that are considerably more plausible than the wholesale change to Schaffer's valve that would result from eliminating the two U-shaped members and replacing them with the single string/wire of Hartley or Eller. For example, when addressing Schaffer's alleged disclosure of Claim 5, Petitioner asserts that a POSA would have recognized multiple straightforward ways to enhance or maintain Schaffer's seal with a reasonable expectation of success, but that is a reason why a POSA would not make the wholesale changes that Petitioner proposes. *See* Petition, p.55. During deposition in the related '012 IPR, Mr. Thornton confirmed that those simple adjustments would work, whether or not there was a pressure differential across the valve. EX2031, 121:21-122:12. Dr. Zalesky agrees. EX2024, ¶164.

Accordingly, a POSA would have understood that simple properties of Schaffer's existing valve such as spring force or properties of the seal module could be adjusted to improve Schaffer's seal. *Id.*; Petition, p.55. A POSA would have also understood that such adjustments employ Schaffer's stated principles of operation including two nonconforming actuating members each attached to a single actuator

button that compress the compliant seal member 165 to conform and seal, and simple manufacturability, durability, and forcible disengagement. EX2024, ¶165.

Put differently, a POSA would have known multiple ways that Schaffer could be improved based on its disclosure without the significant and disadvantageous changes required by Petitioners' combination. For example, Mr. Thornton confirmed that adjusting the spring strength would allow Schaffer's valve to be manufactured in the same manner it discloses. EX2031, 123:13-19. Dr. Zalesky agrees. EX2024, ¶¶164-165.

As another example, a POSA would understand that the properties of the seal module could be adjusted to improve the seal if somehow needed, such as its materials and resultant characteristics. EX1005, ¶[0059]. Petitioner provides no reason why a POSA would not have made the comparably simple "change" to use the specific properties of the seal member 165 disclosed in Schaffer if there was somehow a sealing issue (there is not), and that would maintain Schaffer's principles of operations. EX2024, ¶164. For example, a POSA would understand that the seal member 165 could easily be made to have those specific properties by simply using "commonly available [materials such] as 'C-Flex' or 'Kraton' in the range of 5 to 15 (shore A)." *Id.*; EX1005, ¶[0059].

Despite Schaffer's disclosure about the materials/characteristics of the seal member 165, during deposition in the related '012 IPR, Mr. Thornton initially

testified that he did not know what those characteristics or materials were based on Schaffer. *See* EX2031, 126:9-22 ("I don't know what the characteristics are of that 165 module" and "that material isn't really specified directly or clearly in the [Schaffer] patent."); 129:4-10 ("I don't believe that they describe the material choice in enough detail with wall thickness, hardness."). But Mr. Thornton later reversed course and admitted that a POSA would have understood how to select the materials and properties of the seal member 165 to make Schaffer's valve seal and that the commonly available materials listed by Schaffer would work:

> Q: So someone skilled in the art could figure out what to use to get a good seal; is that right?
>
> THORNTON: I believe a person skilled in the art would be able to find the right material, wall thickness, other physical parameters, in order to create an adequate seal.
>
> ***
>
> Q: [Schaffer] gives you things that the materials can be compounded with, correct?
>
> THORNTON: Yeah, it lists some that could be modified by compounding them. Such materials are commonly known as C-flex or Kraton. There's two materials [Schaffer] listed … And a wide range of 5 to 15 in the shore A hardness, so they're providing a range of options. It's not a specific mandatory, **this is a tube that works, and we know it works**.

Id. at 130:22-131:1, 131:15-132:1 (emphasis added). That is, Petitioner's expert acknowledged that forming the seal member from C-flex or Kraton—as Schaffer discloses—would work to seal Schaffer's valve. Dr. Zalesky agrees. EX2024, ¶164.

Accordingly, Petitioner and its expert provide a number of comparably simple modifications, including those found expressly in Schaffer's own disclosure, that a POSA would know would work to fix any sealing issues in Schaffer, but provide no reason why a POSA would not make those simple modifications rather than the more complicated hindsight-based modifications that contradict Schaffer's principles of operation as explained below in §V.D. EX2024, ¶¶163-165.

3. Petitioner's proposed substitution would also not yield the alleged predictable results of sealing Schaffer's valve.

Petitioner's proposed combination would seal less effectively around multiple instruments and/or irregularly-shaped instruments—scenarios for which Schaffer's valve is designed form a complete seal as explained above in §V.A.2.:

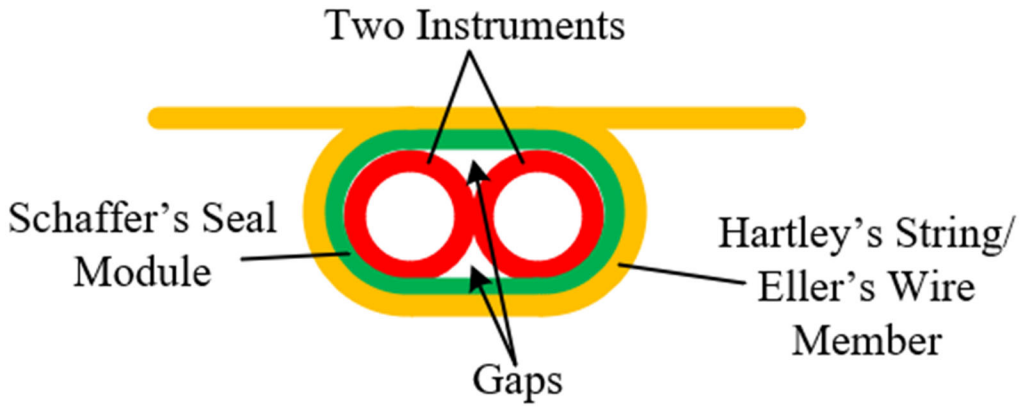

EX2024, ¶125. It's therefore not a suitable option or predictable result that Petitioner's proposed simple substitution would seal Schaffer's valve in the manner it is intended to seal as it is not suitable for sealing around multiple instruments and irregularly-shaped instruments. *Intel Corp. v. Qualcomm Inc.*, 21 F.4th 784, 800 (Fed. Cir. 2021).

Likewise, during deposition in the related '012 IPR, Mr. Thornton testified that if flexible strings were used in the embodiment of Figures 8-9 of the '921 Patent, he would be unable to know how the filaments would act:

> Q: So let's say those two sub-filaments, as you refer to them, are made of a string. And you had said you're not sure where their orientation would be in an actual device; is that correct?
>
> [Objection]
>
> THORNTON: Yes, if these were a very flexible string, and the buttons were compressed such that it's in the expanding configuration, it's kind of unknown. It's unlikely that they would have the shape shown here of -- which are perfectly straight lines and perfectly partial circle on the bight area.
>
> Q: And you had said unknown, you wouldn't know what shape they would take, would you?
>
> THORNTON: Probably not without knowing the rest of the parameters and building prototype devices.

EX2031, 44:21-45:11. Accordingly, Mr. Thornton acknowledges that using a flexible filament rather than rigid actuating members (like Schaffer's) can lead to positional variability that is not predictable without knowing more (e.g., "building prototype devices"). Dr. Zalesky agrees—a POSA would understand the results of substituting Hartley's flexible string/Eller's flexible wire for Schaffer's rigid actuating members to likewise be unpredictable. EX2024, ¶¶147, 156. For example, the inherent flexibility of the string/wire could render its relaxed geometry uncontrollable, resulting in non-orthogonal positioning around Schaffer's seal module. *Id*. at ¶156. That unpredictability is exacerbated by Petitioner's proposed modification/combination because Hartley and Eller—the only references that disclose a flexible member—precisely control movement of that flexible member with a **single** movable actuator such that the flexible string/wire moves an equal and certain amount upon actuation. *Id*. at ¶¶141, 145. In Petitioner's combination, the movement of the string/wire would not be precisely controlled in that manner by a single actuator as either of Schaffer's buttons could be depressed independently to move one end of a string/wire in an even more unpredictable manner. *Id*. at ¶147.

Petitioner's proposed combinations of Schaffer and Hartley/Eller therefore not only depart from the intended purpose and express disclosure of these references in which a single U-shaped actuating member/string/wire are controlled by a single actuator, but do not predictably seal.

C. Petitioner Fails to Establish that the Solutions for Constricting a Tubular Member in a Hemostasis Valve Were Finite, Identifiable, or Known

Petitioner advances what appears to be an "obvious to try" rationale for substituting Hartley's string/Eller's wire for Schaffer's U-shaped members. Petition, pp.37, 43; *See KSR Int'l Co. v. Teleflex Inc*., 550 U.S. 398, 421 (2007) (discussing "obvious to try," and stating "[w]hen there is a design need or market pressure to solve a problem and there are a finite number of identified, predictable solutions, a person of ordinary skill has good reason to pursue the known options within his or her technical grasp."). To reach a determination that the claimed invention would have been obvious to try, "the possible approaches and selection to solve the problem must be 'known and finite.'" *Rolls–Royce, PLC v. United Techs. Corp.*, 603 F.3d 1325, 1339 (Fed. Cir. 2010) (citing *Abbott Labs. v. Sandoz, Inc.*, 544 F.3d 1341, 1351 (Fed. Cir. 2008)). "The important question is whether the invention is an 'identified, predictable solution' and an 'anticipated success.'" *Id*. (citing *Abbott Labs.*, 544 F.3d at 1352). "Thus, it is not enough for there to be a finite number of solutions**, the options and solutions must have been identified and known**." *Kingston Tech. Co., Inc. v. Polaris Innovations Ltd.*, No. IPR2016-01623, 2018 WL 851884, at *5 (P.T.A.B. Feb. 9, 2018) (emphasis added).

Here, Petitioner has failed to demonstrate that the options and solutions for "constricting a tubular member in a hemostasis valve" were identified and known.

Petition, pp.37, 43. Petitioner and its expert propose only three options: "Hartley and Schaffer disclose two such options: Hartley's string and Schaffer's actuating member … Eller discloses a third option: wire members." *Id*. at p.37; EX1003, ¶88. But, at deposition in the related '012 IPR, Mr. Thornton admitted that there were more ways to constrict a tubular member in a hemostasis valve including those disclosed in Schaffer '616 (EX2031, 105:24-106:4, 106:12-14), Wong (*id*. at 106:15-19), Kees (*id*. at 108:14-20, 110:7-19), Myers (*id*. at 111:9-23), his previous work on a hemostatic-type clamp prototype (*id*. at 106:20-24), and more (*id*. at 112:5-114:24).

In fact, Mr. Thornton admitted that he did not know how many options existed:

> Q: Do you think there's other ways that exist [to compress a tubular member in a hemostasis valve]?
>
> [Objection]
>
> THORNTON: Could be other ways that exist.
>
> Q: How many other?
>
> THORNTON: **I don't know**.
>
> Q: So when you say, These finite predictable options, you don't know how many other finite predictable options there are; is that correct?
>
> [Objection]

> THORNTON: **I don't know how many options could be used to compress a tube.**

EX2031, 107:2-13 (emphasis added). Petitioner's "obvious to try" argument fails for this reason alone—the options and solutions for compressing a tubular member in a hemostasis valve were not "known" or "identified" as admitted by Petitioner's expert.

D. Petitioner's Proposed Modifications Would Change Schaffer's Principles of Operation

There is no motivation to modify a reference or combine prior art references where the modification/combination would alter the principle of operation or render the prior art inoperable for its intended purpose. *See Adidas AG v. Nike, Inc.*, 963 F.3d 1355, 1358-59 (Fed. Cir. 2020) (affirming lack of motivation to combine references where the proposed modification would "require the alteration of the principle of operation of [the primary reference] or would render [the primary reference] inoperable for its intended purpose."); *Plas-Pak Indus. V. Sulzer MixPak* AG, 600 Fed.App'x. 755, 758 (Fed. Cir. 2015) (rejecting obviousness findings where the necessary alterations would fundamentally change a reference's "principle of operation").

Here, a POSA would understand that Schaffer's rigid U-shaped actuating members are necessary to "forcibly disengage" when unsealing, necessary for Schaffer's disclosed method of manufacture, and necessary to provide Schaffer's

various benefits including reliability and durability. EX1005, ¶¶[0080]-[0082]. As such, a POSA would not have been motivated to modify Schaffer based on Eller/Hartley as Petitioner suggests.

1. Substituting Hartley's string/Eller's wire for Schaffer's actuating members would prevent forcible disengagement.

A POSA would not replace Schaffer's rigid U-shaped actuating members with Hartley's string/Eller's wire member because such a modification would prevent forcible disengagement, as described above in §III.A. EX2024, ¶¶161-162. Forcible disengagement is an important principle of Schaffer's valve design because it is part of Schaffer's solution for "balanc[ing] between closing force, opening force, friction, compression and durability." EX1005, ¶[0007]; EX2024, ¶162.

As explained above, Hartley's string or Eller's wire would wrap around Schaffer's seal module in Petitioner's combination, and the seal module would expand against the string/wire to open when tension is released thereon. Petition, pp.35-39, 43-44. In this arrangement, Hartley's string/Eller's wire would never disengage—let alone forcibly disengage—Schaffer's seal module. EX2024, ¶162. Therefore, this modification would change a principle of operation of Schaffer. *Id.*

In the Institution Decision in the related '012 IPR, the Board stated that while Petitioner's proposed combination requires a "structural change," the "valve's operation and purpose is (at least arguably) materially unchanged in the modified

Schaffer valve." EX2032, p.43. Patent Owner respectfully disagrees. Even if the modified Schaffer valve has a similar operation and purpose, that does not mean the modification entails a simple substitution or that there is a motivation to make such a change, and as explained above in §V.B.1-3. EX2024, ¶148. Instead, Petitioner's alleged modification is not found in the art at all and is based on impermissible hindsight stemming from the '921 Patent.

2. Substituting Hartley's string/Eller's wire for Schaffer's actuating members would compromise the ease of manufacturing and durability of Schaffer's valve.

Schaffer's U-shaped actuating members 55 are purposefully designed to be rigid and attached to only a single actuator. EX2024, ¶¶149-160. In addition to precise control, that design choice provides simple methods of assembly and manufacturing, and effectively addresses Schaffer's express need for "a durable stasis valve." EX1005, ¶[0008]. Petitioner's proposed substitutions would introduce assembly difficulties and undermine the durability of Schaffer's valve. EX2024, ¶149-160.

Schaffer discloses a method of manufacture that relies upon its U-shaped actuating members being rigid and attached to only a single actuator, as explained above in §III.A. EX2024, ¶151. Specifically, Schaffer discloses that its U-shaped members are advantageously machined, and that the valve is assembled by inserting the seal module "through the housing 20 and between each actuator 50" when the

buttons are depressed to form an opening through the actuating members. *Id*.; EX1005, ¶[0083].

A POSA would understand that Petitioner's modification with Hartley's string/Eller's wire would not only complicate manufacturing but also render Schaffer's method of assembly inefficient and unreliable compared to Schaffer's straightforward design. *Id*. at ¶¶152-155. For example, to achieve Petitioner's proposed modification in which a single string/wire is tethered to both of Schaffer's actuator buttons 261 (Petition, pp.35-38, 43-44), the string/wire would need to be either (1) secured to the actuator buttons before the actuator buttons are inserted into the openings in the housing or (2) secured to the actuator buttons after they are inserted into the openings. EX2024, ¶152. However, the first method of assembly would not be possible because the tethered actuator buttons could not be inserted through the respective openings on either side of the housing while also positioning the string/wire as alleged by Petitioner. *Id.* at ¶153. Likewise, a POSA would understand the second method of assembly to be unduly difficult because the housing and the actuator buttons would block access to the interior of the housing and prevent the positioning of the string/wire in Petitioner's combination. *Id.* at ¶154.

Further, Schaffer teaches that "[e]ach actuator button 261 is completely compressed and held while the seal module 100 is inserted through the housing 20

and between each actuator 50." EX1005, ¶[0083]. A flexible string or wire member would loosen when the actuator buttons 261 are compressed such that neither would provide a uniform opening like Schaffer's rigid U-shaped actuating members to easily permit positioning of the seal module therethrough. EX2024, ¶155-156. Therefore, a POSA would recognize that the substitution of Hartley's string/Eller's wire for Schaffer's U-shaped actuating members is contrary to Schaffer's disclosed method of assembly. *Id*. at ¶¶157-158.

Schaffer also discloses that its U-shaped members are manufactured by means of machining (the controlled removal of material) plastic or metal. EX1005, ¶[0082]; EX2024, ¶159. Schaffer's standard machining methods to manufacture its rigid U-shaped members would not work well with filaments. EX2024, ¶159. A string/wire would deform when subjected to force during the machining process, making it exceedingly challenging—if not unfeasible—to manufacture the filament in that manner. *Id.*

Regarding durability, Schaffer's construction enables the valve to endure operational demands and maintain its performance and structural integrity over time. EX2024, ¶160. Substituting Hartley's string/Eller's wire could weaken the valve's durability given the flexible nature of these components, ultimately undermining its intended function of providing a dependable and long-lasting seal mechanism. *Id.*

In the Institution Decision in the related '012 IPR, the Board stated that the "[manufacturing] methods cited by Patent Owner appear to relate to examples or optional techniques in Schaffer for making the valve." EX2032, p.46. But even if these methods are "optional," it does not mean that a POSA could have manufactured Petitioner's proposed modification via other techniques without undue experimentation. Indeed, while Petitioner's expert provides an alternative manufacturing technique—a tapered fixture—he only provides a single conclusory sentence stating that such a fixture could be used "to introduce a folded/collapsed seal module through the looped strings." EX1003, ¶87. Petitioner and its expert do not address the inherent floppiness/flexibility of the string/wire that would collapse and not retain a loop form before inserting the tapered fixture. EX2024, ¶156. Moreover, even if a POSA could have manufactured Petitioner's proposed modification without undue experimentation, that does not mean the modification entails a simple substitution, as explained above in §V.B.1-3.

Accordingly, a POSA would neither have found it obvious nor have been motivated to substitute Hartley's string/Eller's wire for Schaffer's U-shaped actuating members, as doing so would reduce the ease of manufacturing and durability of Schaffer's valve.

VI. THE CLAIMS ARE NOT OBVIOUS OVER HARTLEY IN VIEW OF ELLER (GROUND 5)

Petitioner's proposed combination of Hartley and Eller fails to disclose or render obvious the limitations of the Claims including "a biasing member configured to bias the actuator to the first position." Petitioner concedes that Hartley does not teach a "biasing member" and asserts that it would have been obvious to a POSA to have included Eller's torsion spring in Hartley to bias Hartley's valve to a sealed position. Petition, pp.81-85. A POSA would not have been so motivated because adding a torsion spring would be contrary to and would change Hartley's principle of operation by obviating its ball-and-detent system and thus rendering that system inoperable for its intended purpose. EX2024, ¶¶170-182.

Hartley's objective is to "provide an access valve which can be controlled to vary the size of the aperture through the valve and be flexible so that a seal may be formed against an instrument." EX1006, ¶[0004]. Hartley achieves that objective through a "detent arrangement" that includes a ball 28 biased by a spring 29 to engage a central recess 34 and end recesses 36 of a housing 6:

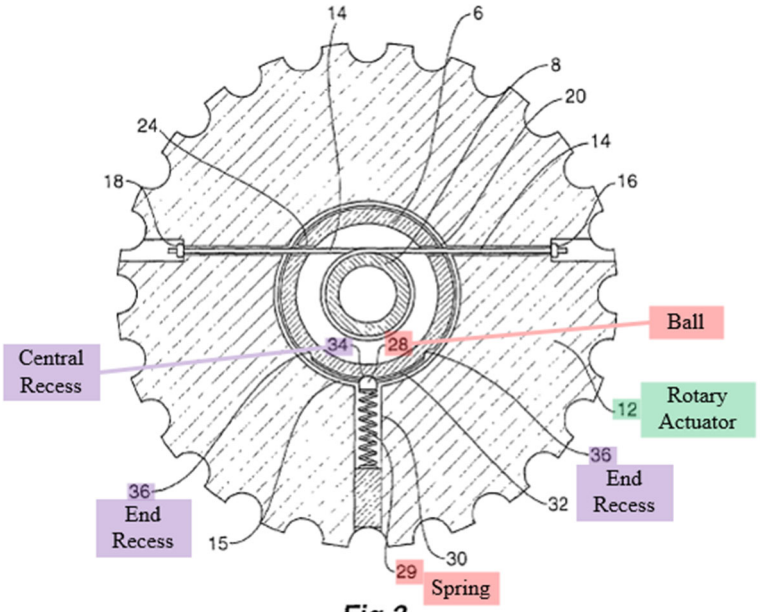

Fig 3

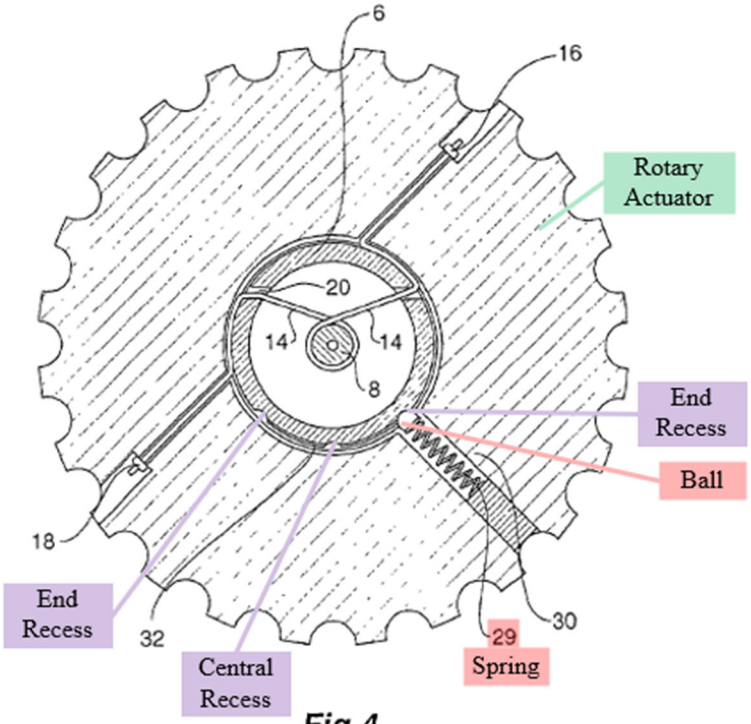

Fig 4

Id. at [0033]; EX2024, ¶171.

The ball-and-detent system ***retains*** the rotary actuator on the cylindrical housing in a selected position and provides tactile feedback as the rotary actuator is rotated. EX1006, ¶¶[0015], [0018], [0033]; EX2024, ¶¶171-172. Accordingly, the detents provide different locking positions that correspond to different opening sizes for the lumen, and Hartley discloses that additional detents may be provided to allow for additional locked/retained lumen sizes. EX2024, ¶¶171-172; EX1006, ¶[0033].

A POSA would understand that modifying Hartley to include Eller's spring "to bias [the] actuator [of Hartley] to a position wherein the lumen of a hemostasis valve is sealed" as proposed by Petitioner (Petition, p.83) would render Hartley's ball-and-detent system inoperable because, by biasing to the closed position, Eller's spring would override the ball-and-detent system and eliminate Hartley's ability to selectively maintain various opening sizes for the lumen—acting to always seal the valve. EX2024, ¶173. For example, Hartley's valve could not be maintained in the open position shown in Figure 3 above in which the ball 28 engages the central recess 34 to maintain the valve in an open position. *Id*.

Further, the pressure exerted by the spring could create significant resistance against any instruments being advanced through Hartley's valve, especially when advancing softer instruments. *Id*. at ¶¶176-182. Accordingly, a POSA would understand that Hartley's ball-and-detent system, which allows for various lumen sizes to be maintained and instruments to be easily advanced, is necessary to

Hartley's principle of operation and that modifying Hartley to include a spring would render that feature inoperable. *Id*.

Petitioner's expert alleges that "Hartley makes clear that the ball and detent are optional features." EX1003, ¶193. But Hartley does not describe the ball-and-detent as optional. EX2024, ¶174. Rather, Hartley's only embodiment includes that arrangement, and Hartley affirmatively states that "[a]s particularly shown in FIGS. 3 and 4 a detent arrangement having a ball 28 loaded by a spring 29 in an aperture 30 in the rotary actuator runs in a groove 32 in the cylindrical housing 6." *Id*.; EX1006, ¶[0033]. In contrast, the same disclosure of Hartley clearly describes when other features are optional: "[t]here **may** also be further recesses or detents between the central recess and the end recesses." *Id.* (emphasis added).

Petitioner also argues that "Hartley's detent mechanism … would offer benefits even with a torsion spring because it would provide 'tactical [sic] feedback' as the user opens the valve." Petition, p.85. But, even if so, that ignores that Petitioner's modification would render Hartley's ball-and-detent arrangement completely inoperable for its intended purpose of retaining the rotary actuator in position and thereby maintaining the valve in a selected valve state (open, partially open) as explained above. EX2024, ¶175.

Accordingly, a POSA would not have been motivated to modify Hartley in view of Eller because Petitioner's proposed modification would change the principle

of operation of Hartley's ball-and-detent system and eliminate the objective of Hartley's invention.

VII. CONCLUSION

For the reasons set forth herein, Petitioner has failed to demonstrate that any of Claims 1-9 are unpatentable over Grounds 1-5.

Respectfully submitted,

Dated: July 15, 2025

By: */ Joseph P. Hamilton /*
Joseph Hamilton
Reg. No. 51,770
Lead Counsel for Patent Owner

CERTIFICATE OF COMPLIANCE

Pursuant to 37 C.F.R. § 42.24(d), I, Joseph Hamilton, certify that **PATENT OWNER'S PRELIMINARY RESPONSE** contains 13,949 words, excluding those portions identified in 37 C.F.R. § 42.24(a), as measured by the word-processing system used to prepare this paper.

Dated: July 15, 2025

By: / *Joseph P. Hamilton* /
Joseph Hamilton
Reg. No. 51,770

CERTIFICATE OF SERVICE

Pursuant to 37 C.F.R. § 42.6(e), I certify that on July 15, 2025, a copy of **PATENT OWNER'S PRELIMINARY RESPONSE, and EXHIBITS 2024-2032** was served upon the below-listed counsel by electronic mail:

Joshua J. Stowell
Joshua.Stowell@knobbe.com
Joseph R. Re
Joe.Re@knobbe.com
Brian C. Barnes
Brian.Barnes@knobbe.com
BoxImperative921@knobbe.com

Dated: July 15, 2025 By: */ Kate Rose /*
Kate Rose